THOSE PORTIONS OF THIS DRAWING WHICH ARE COLORED CYAN INDICATE THAT THE COLORED ITEM IS SUBJECT TO AGING MANAGEMENT REVIEW

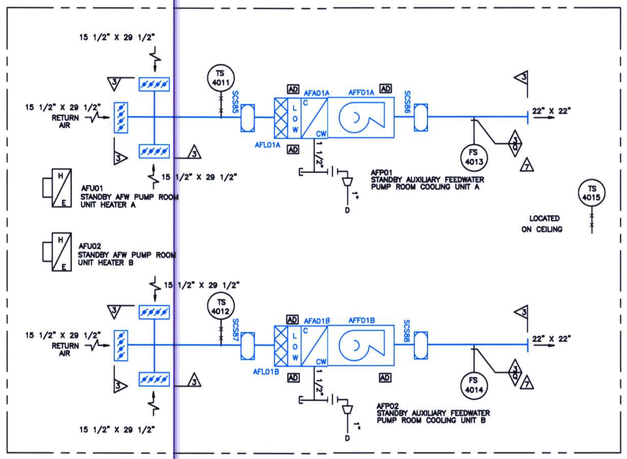

STANDBY AUXILIARY FEEDWATER BUILDING

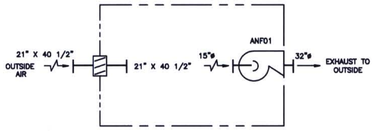

PRIMARY NITROGEN BOTTLE HOUSE

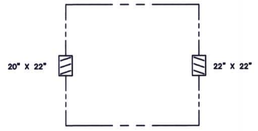

PRIMARY HYDROGEN BOTTLE HOUSE

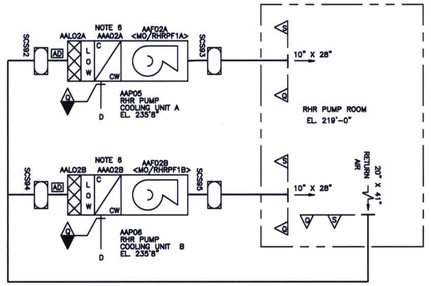

D-50

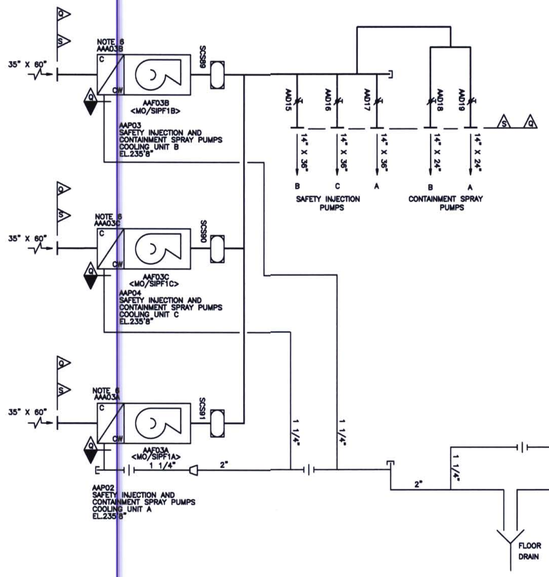

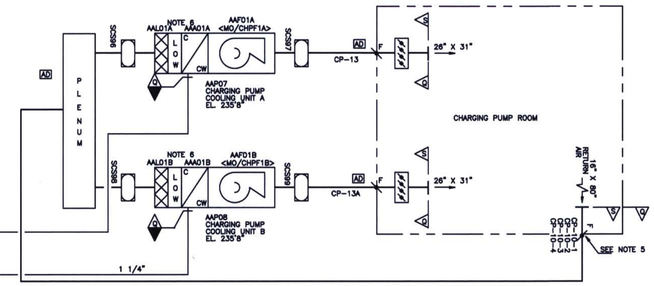

AUXILIARY BUILDING

NOTES:

1. FOR GENERAL NOTES REFER TO DRAWING 33013-2241
2. THIS DRAWING SUPERSEDES PORTIONS OF DRAWINGS 33013-1253, 1254, AND 1255
3. VALVE POSITIONS AT THIS TIME DO NOT REFLECT ALIGNMENT FOR ANY MODE OF OPERATION; THEY ARE SHOWN ONLY TO REPRESENT THE SYSTEM AS-BUILT CONFIGURATION
4. ALL SAFETY CLASS 3 DUCTWORK IS SEISMIC CATEGORY I
5. FIRE DAMPERS ARE STACKED FOUR (4) HIGH IN A SINGLE RETURN DUCT.
6. COOLING COIL SAFETY CLASS INDICATED FOR AIR SIDE ONLY.
7. ELECTRIC MOTOR EIN'S FOR MECHANICAL EQUIPMENT ARE DEPICTED IN BRACKETS ADJACENT TO MECHANICAL EQUIPMENT PER SFEWR 10328.

	REVISED PER	AAO3	RMS	CAV	THM
7	SFR 2001-0007	1/24/01	2/1/01	2/1/01	2/1/01
CHECKED BY	DESIGN	CHECK #	DRAWING #	Rev.	SUB.

CAD FILE NAME: 3P188901

	CONSTRUCTION	
	LIMITED CONSTRUCTION AS NOTED	
	PRELIMINARY NOT FOR CONSTRUCTION	
	BIDDING PURPOSES	
2/1/01	AS BUILT	CAV
DATE	RELEASED FOR	ENGR.

DRAWN: GINNA STA. — ROCHESTER GAS & ELECTRIC CORP. ROCHESTER, NEW YORK

SCALE: NONE

AUX./INT.BLDGS. HVAC SYSTEMS
COOLING FOR CHARGING, SAFETY INJECTION, CONT. SPRAY, RHR & SAFW PUMPS, NITROGEN AND HYDROGEN VENTS
P & ID

JOB NO.	DRAWING NO.	REV.
EWR 3391E	33013-1869-LR	7

CCD 01 | CONTROL COPY #