THOSE PORTIONS OF THIS DRAWING WHICH ARE COLORED CYAN INDICATE THAT THE COLORED ITEM IS SUBJECT TO AGING MANAGEMENT REVIEW

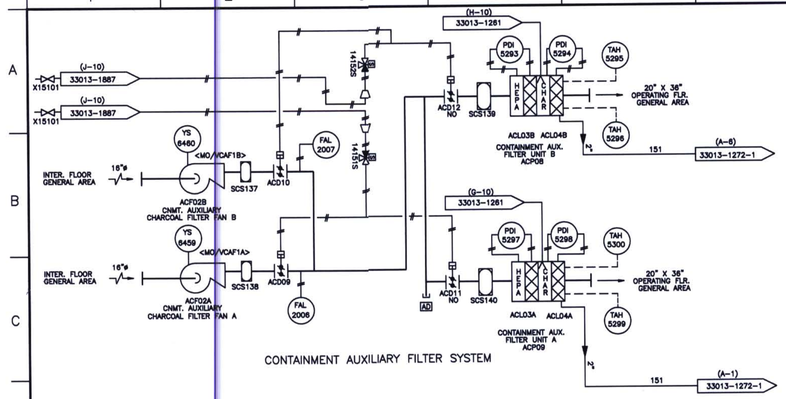

CONTAINMENT AUXILIARY FILTER SYSTEM

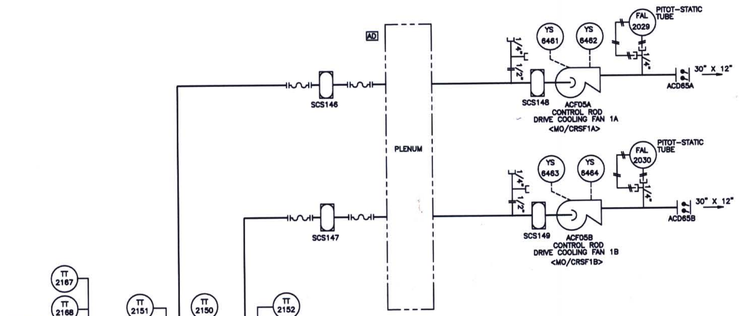

CONTROL ROD DRIVE COOLING SYSTEM

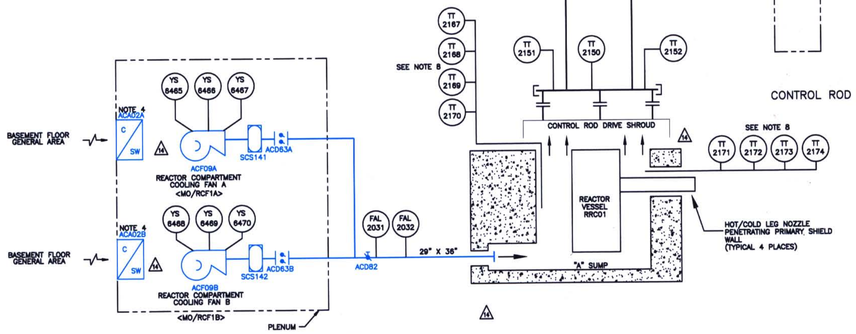

REACTOR COMPARTMENT COOLING SYSTEM

D-46

NOTES:

1. FOR GENERAL NOTES SEE DRAWING 33013-2241.
2. REVISION "0" OF THIS DRAWING SUPERSEDED PORTIONS OF DRAWING: 33013-1253, 1254, & 1255.
3. VALVE POSITIONS AT THIS TIME DO NOT REFLECT ALIGNMENT FOR ANY MODE OF OPERATION; THEY ARE SHOWN ONLY TO REPRESENT THE SYSTEM AS-BUILT CONFIGURATION.
4. COOLING COIL SAFETY CLASS INDICATED FOR AIR SIDE ONLY.
5. ALL PIPING/COMPONENTS AND VENTILATION EQUIPMENT SHOWN ON THIS DRAWING IS NON-NUCLEAR SAFETY CLASS.
6. WORK UNDER TSR 94-214 DELETED INTERLOCK OF CRDM FANS AND SUCTION DAMPERS ACD64A AND ACD64B.
7. ELECTRIC MOTOR EIN'S FOR MECHANICAL EQUIPMENT ARE DEPICTED IN BRACKETS ADJACENT TO MECHANICAL EQUIPMENT PER SFDWR 10326.
8. SEE CMIS DESRIPTION OR MCB TEMPERATURE RE-CORDER (RK-28A) FOR EXACT LOCATION OF TEMPERATURE TRANSMITTERS.

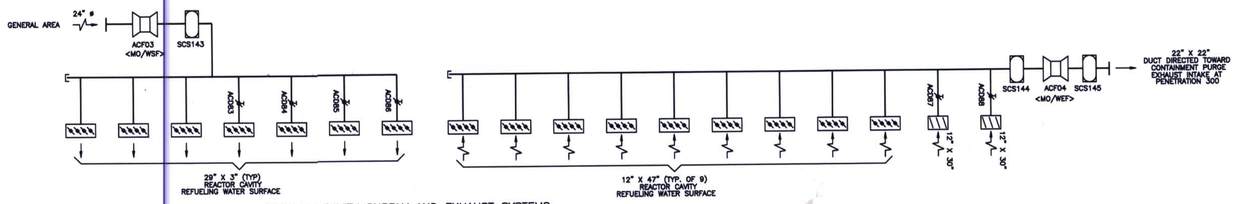

REACTOR CAVITY SUPPLY AND EXHAUST SYSTEMS

0	ISSUED FOR DCR 2001-0030	JAYC	RMS	CAV	TMM
REVISION	DESCRIPTION	DRAWN BY	DESIGNED BY	ENGR. REV.	APPROVED

CAD FILE NAME: 33*1884R01

	CONSTRUCTION
	LIMITED CONSTRUCTION AS NOTED
	PRELIMINARY NOT FOR CONSTRUCTION
	BIDDING PURPOSES
2/1/01	AS BUILT — CAV
DATE	RELEASED FOR — ENGR.

PLANT: GINNA STA.	ROCHESTER GAS & ELECTRIC CORP. ROCHESTER, NEW YORK
SCALE: NONE	

CONTAINMENT HVAC SYSTEMS
CONT. AUXILIARY CHARCOAL FILTERS, REFUELING WATER VENTILATION, REACTOR COMPARTMENT AND CONTROL ROD DRIVE COOLING
P & ID

JOB NO.	DRAWING NO.	REV.
EWR 3391E	33013-1884-LR	0
CCD 01	CONTROL COPY #	