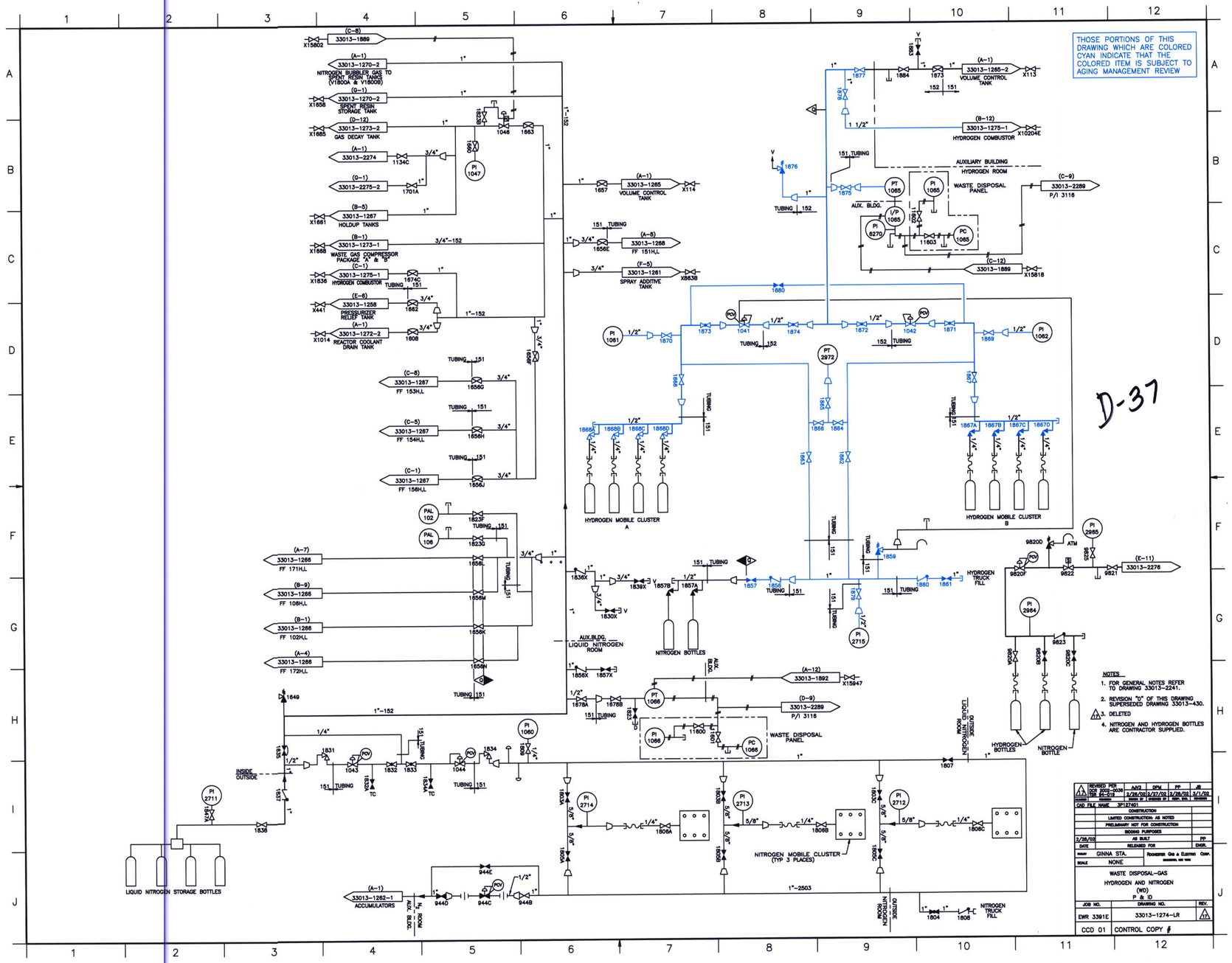
THOSE PORTIONS OF THIS DRAWING WHICH ARE COLORED CYAN INDICATE THAT THE COLORED ITEM IS SUBJECT TO AGING MANAGEMENT REVIEW.
D-37
NITROGEN BUBBLER GAS TO SPENT RESIN TANKS (V1800A & V1800B)
SPENT RESIN STORAGE TANK
GAS DECAY TANK
HOLDUP TANKS
WASTE GAS COMPRESSOR PACKAGE "A" & "B"
HYDROGEN COMBUSTOR
PRESSURIZER RELIEF TANK
REACTOR COOLANT DRAIN TANK
VOLUME CONTROL TANK
FF 151H,L
SPRAY ADDITIVE TANK
FF 153H,L
FF 154H,L
FF 156H,L
FF 171H,L
FF 108H,L
FF 102H,L
FF 172H,L
LIQUID NITROGEN STORAGE BOTTLES
ACCUMULATORS
AUX. BLDG. LIQUID NITROGEN ROOM
NITROGEN BOTTLES
WASTE DISPOSAL PANEL
HYDROGEN MOBILE CLUSTER A
HYDROGEN MOBILE CLUSTER B
NITROGEN MOBILE CLUSTER (TYP 3 PLACES)
AUXILIARY BUILDING HYDROGEN ROOM
HYDROGEN TRUCK FILL
NITROGEN TRUCK FILL
OUTSIDE NITROGEN ROOM
OUTSIDE LIQUID NITROGEN ROOM
HYDROGEN BOTTLES
NITROGEN BOTTLE
NOTES
1. FOR GENERAL NOTES REFER TO DRAWING 33013-2241.
2. REVISION "0" OF THIS DRAWING SUPERSEDED DRAWING 33013-430.
3. DELETED
4. NITROGEN AND HYDROGEN BOTTLES ARE CONTRACTOR SUPPLIED.
REVISED PER NOR 2002-2038 TOR 02-018
AJG DPM PP JB
3/28/02 3/27/02 3/28/02 3/1/02
CAD FILE NAME 3P127401
CONSTRUCTION
LIMITED CONSTRUCTION AS NOTED
PRELIMINARY NOT FOR CONSTRUCTION
BIDDING PURPOSES
AS BUILT
3/28/02 PP
DATE RELEASED FOR DWN.
DRAWN GINNA STA. ROCHESTER GAS & ELECTRIC CORP.
SCALE NONE
WASTE DISPOSAL-GAS
HYDROGEN AND NITROGEN
(WD)
P & ID
JOB NO. DRAWING NO. REV.
EWR 3391E 33013-1274-LR
CCD 01 CONTROL COPY #