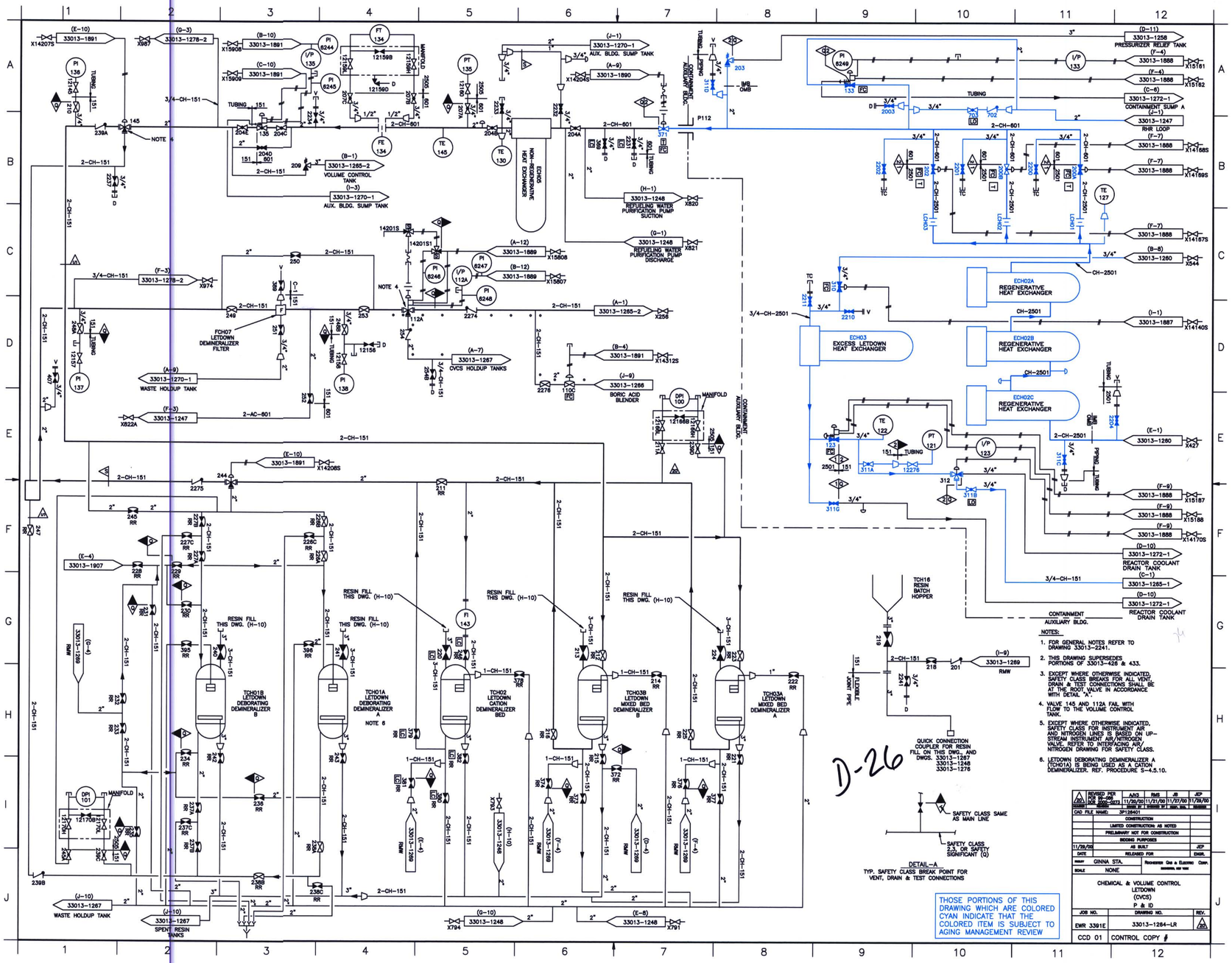

NOTES:

1. FOR GENERAL NOTES REFER TO DRAWING 33013-2241.
2. THIS DRAWING SUPERSEDES PORTIONS OF 33013-426 & 433.
3. EXCEPT WHERE OTHERWISE INDICATED, SAFETY CLASS BREAKS FOR ALL VENT, DRAIN & TEST CONNECTIONS SHALL BE AT THE ROOT VALVE IN ACCORDANCE WITH DETAIL "A".
4. VALVE 145 AND 112A FAIL WITH FLOW TO THE VOLUME CONTROL TANK.
5. EXCEPT WHERE OTHERWISE INDICATED, SAFETY CLASS FOR INSTRUMENT AIR AND NITROGEN LINES IS BASED ON UP-STREAM INSTRUMENT AIR/NITROGEN VALVE. REFER TO INTERFACING AIR/NITROGEN DRAWING FOR SAFETY CLASS.
6. LETDOWN DEBORATING DEMINERALIZER A (TCH01A) IS BEING USED AS A CATION DEMINERALIZER. REF. PROCEDURE S-4.5.10.

REV.	REVISED PER FCR 92-049 DCR 2000-0073	AJKO 11/20/00	RMS 11/21/00	JS 11/27/00	JEP 11/28/00
CAD FILE NAME: 3P128401					
CONSTRUCTION					
LIMITED CONSTRUCTIONS AS NOTED					
PRELIMINARY NOT FOR CONSTRUCTION					
RECORD PURPOSES					
11/29/00	AS BUILT				JEP
DATE	RELEASED FOR				ENGR.
SCALE NONE	GINNA STA.				

CHEMICAL & VOLUME CONTROL LETDOWN (CVCS) P & ID

JOB NO.	DRAWING NO.	REV.
EWR 3391E	33013-1264-LR	