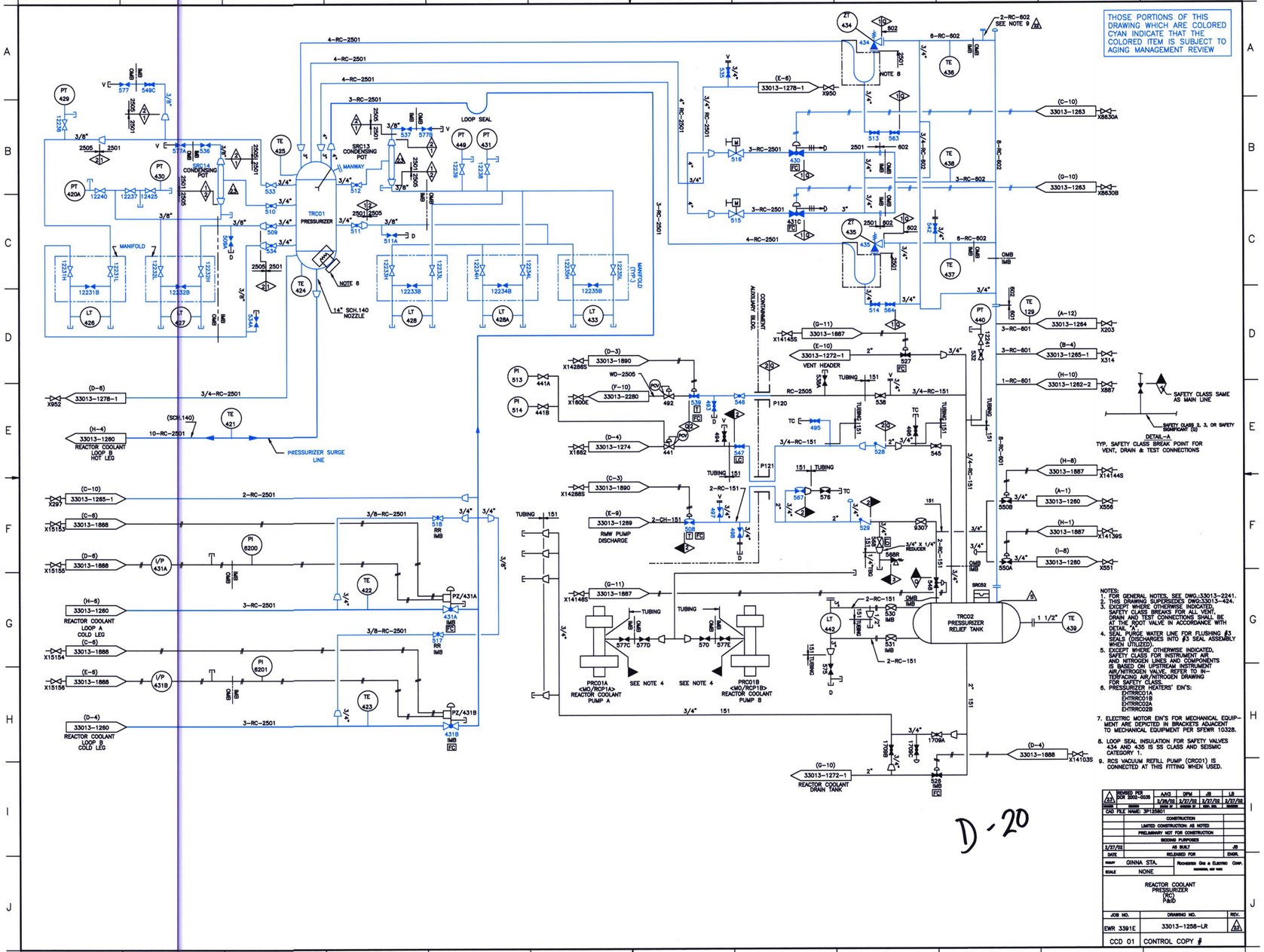
THOSE PORTIONS OF THIS DRAWING WHICH ARE COLORED CYAN INDICATE THAT THE COLORED ITEM IS SUBJECT TO AGING MANAGEMENT REVIEW
TRC01 PRESSURIZER
SRC13 CONDENSING POT
SRC14 CONDENSING POT
LOOP SEAL
MANWAY
MANIFOLD
14" SCH.140 NOZZLE
PRESSURIZER SURGE LINE
REACTOR COOLANT LOOP B HOT LEG
REACTOR COOLANT LOOP A COLD LEG
REACTOR COOLANT LOOP B COLD LEG
CONTAINMENT AUXILIARY BLDG.
VENT HEADER
RMW PUMP DISCHARGE
PRC01A <MO/RCP1A> REACTOR COOLANT PUMP A
PRC01B <MO/RCP1B> REACTOR COOLANT PUMP B
SEE NOTE 4
TRC02 PRESSURIZER RELIEF TANK
REACTOR COOLANT DRAIN TANK
SAFETY CLASS SAME AS MAIN LINE
DETAIL-A
TYP. SAFETY CLASS BREAK POINT FOR VENT, DRAIN & TEST CONNECTIONS
NOTES:
1. FOR GENERAL NOTES, SEE DWG.:33013-2241.
2. THIS DRAWING SUPERSEDES DWG:33013-424.
3. EXCEPT WHERE OTHERWISE INDICATED, SAFETY CLASS BREAKS FOR ALL VENT, DRAIN AND TEST CONNECTIONS SHALL BE AT THE ROOT VALVE IN ACCORDANCE WITH DETAIL "A".
4. SEAL PURGE WATER LINE FOR FLUSHING #3 SEALS (DISCHARGES INTO #3 SEAL ASSEMBLY WHEN UTILIZED).
5. EXCEPT WHERE OTHERWISE INDICATED, SAFETY CLASS FOR INSTRUMENT AIR AND NITROGEN LINES AND COMPONENTS IS BASED ON UPSTREAM INSTRUMENT AIR/NITROGEN VALVE. REFER TO INTERFACING AIR/NITROGEN DRAWING FOR SAFETY CLASS.
6. PRESSURIZER HEATERS' EIN'S:
EHTRRC01A
EHTRRC01B
EHTRRC02A
EHTRRC02B
7. ELECTRIC MOTOR EIN'S FOR MECHANICAL EQUIPMENT ARE DEPICTED IN BRACKETS ADJACENT TO MECHANICAL EQUIPMENT PER SFEWR 10328.
8. LOOP SEAL INSULATION FOR SAFETY VALVES 434 AND 435 IS SS CLASS AND SEISMIC CATEGORY 1.
9. RCS VACUUM REFILL PUMP (CRC01) IS CONNECTED AT THIS FITTING WHEN USED.
D-20
REVISED PER DCR 2002-0035
CAD FILE NAME: 3P125801
CONSTRUCTION
LIMITED CONSTRUCTION AS NOTED
PRELIMINARY NOT FOR CONSTRUCTION
BIDDING PURPOSES
AS BUILT
RELEASED FOR
DATE
ENGR.
GINNA STA.
NONE
REACTOR COOLANT PRESSURIZER (RC) P&ID
JOB NO.
DRAWING NO.
REV.
EWR 3391E
33013-1258-LR
CCD 01
CONTROL COPY #