Nuclear Operating Company
South Texas Project Electric Generating Station P.O. Box 289 Wadsworth, Texas 77483

July 30, 2002
NOC-AE-02001375
10CFR50.90

U. S. Nuclear Regulatory Commission
Attention: Document Control Desk
One White Flint North
11555 Rockville Pike
Rockville, MD 20852

South Texas Project
Unit 1
Docket No. STN 50-498
Submittal of Information Previously Sent by Facsimile

Reference: Letter, J. J. Sheppard to NRC Document Control Desk, "License Amendment Request - Proposed Amendment to Technical Specification 4.4.5.3a," dated January 28, 2002 (NOC-AE-02001245)

On June 17 and June 18, 2002, STP Nuclear Operating Company sent information to the NRC by facsimile to support the ongoing review of our request for a change in the steam generator inservice inspection frequency requirements for South Texas Project Unit 1 (referenced letter). This letter submits on the docket the same information previously sent by facsimile.

If there are any questions regarding this letter, please contact me at (361) 972-7136.

S. M. Head
Manager, Licensing

jtc

Enclosures

A047

STI: 314575726

cc:

(paper copy)

Ellis W. Merschoff
Regional Administrator, Region IV
U.S. Nuclear Regulatory Commission
611 Ryan Plaza Drive, Suite 400
Arlington, Texas 76011-8064

U. S. Nuclear Regulatory Commission
Attention: Document Control Desk
One White Flint North
11555 Rockville Pike
Rockville, MD 20852

Richard A. Ratliff
Bureau of Radiation Control
Texas Department of Health
1100 West 49th Street
Austin, TX 78756-3189

Cornelius F. O'Keefe
U. S. Nuclear Regulatory Commission
P. O. Box 289, Mail Code: MN116
Wadsworth, TX 77483

C. M. Canady
City of Austin
Electric Utility Department
721 Barton Springs Road
Austin, TX 78704

(electronic copy)

A. H. Gutterman, Esquire
Morgan, Lewis & Bockius LLP

M. T. Hardt/W. C. Gunst
City Public Service

Mohan C. Thadani
U. S. Nuclear Regulatory Commission

R. L. Balcom
Reliant Energy, Inc.

A. Ramirez
City of Austin

C. A. Johnson
AEP - Central Power and Light Company

Jon C. Wood
Matthews & Branscomb

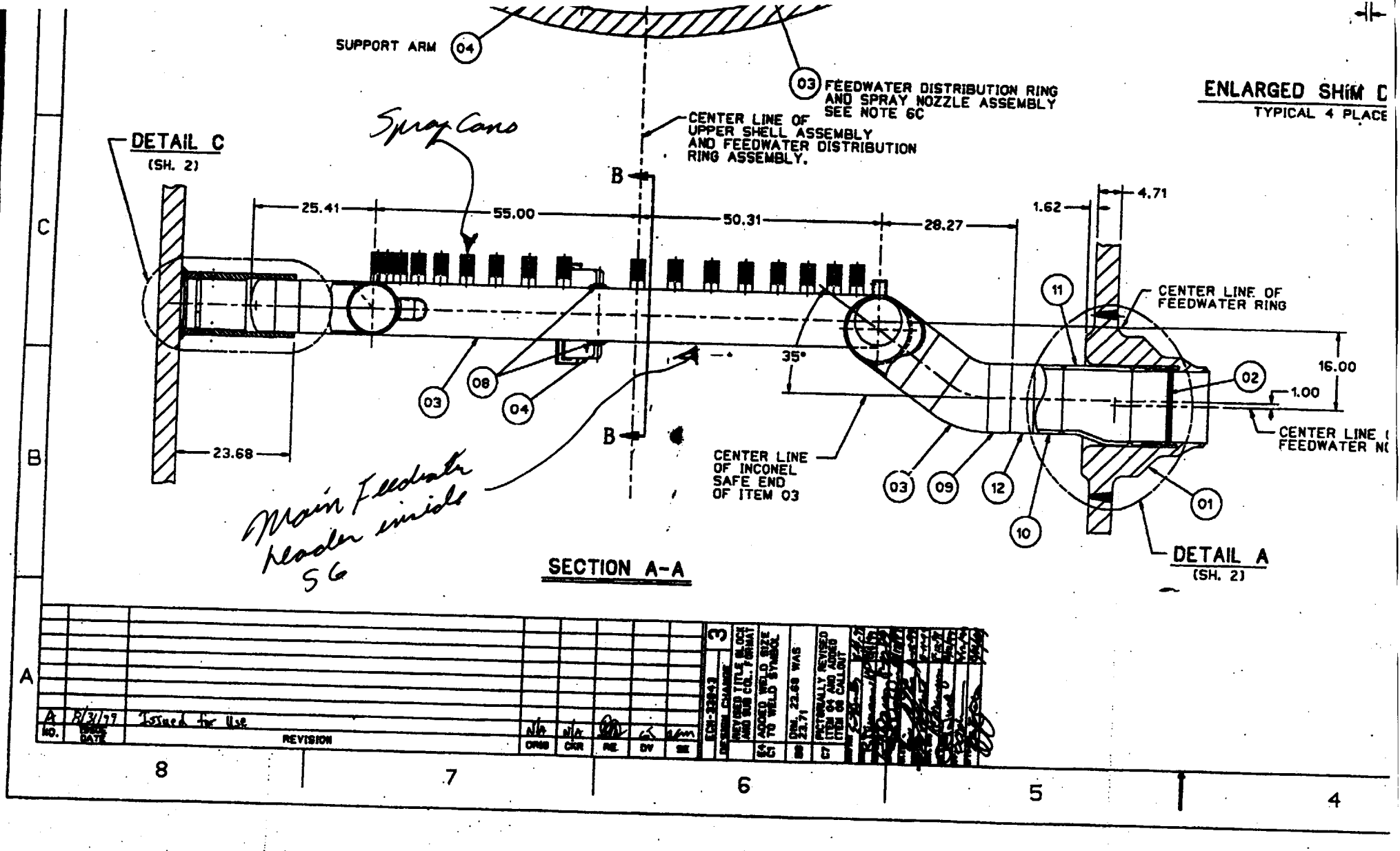
SUPPORT ARM 04
03 FEEDWATER DISTRIBUTION RING AND SPRAY NOZZLE ASSEMBLY SEE NOTE 6C
ENLARGED SHIM D
TYPICAL 4 PLACE
DETAIL C
(SH. 2)
Spray Cans
CENTER LINE OF UPPER SHELL ASSEMBLY AND FEEDWATER DISTRIBUTION RING ASSEMBLY.
B
25.41
55.00
50.31
28.27
1.62
4.71
CENTER LINE OF FEEDWATER RING
11
02
16.00
1.00
CENTER LINE OF FEEDWATER NO
35°
03
08
04
23.68
CENTER LINE OF INCONEL SAFE END OF ITEM 03
03
09
12
10
01
DETAIL A
(SH. 2)
Main Feedwater Header inside SG
SECTION A-A
C
B
A
8
7
6
5
4
A 8/3/77 Issued for Use
NO. DATE REVISION
CRSB CKR RE DV SE
CDR-33843
REVISED TITLE BLOCK AND SUB COL. FORMAT
S4 ADDED WELD SIZE TO WELD SYMBOL
DIM. 22.68 WAS 22.71
C7 PICTORIALLY REVISED ITEM 04 AND ADDED ITEM 08 CALLOUT

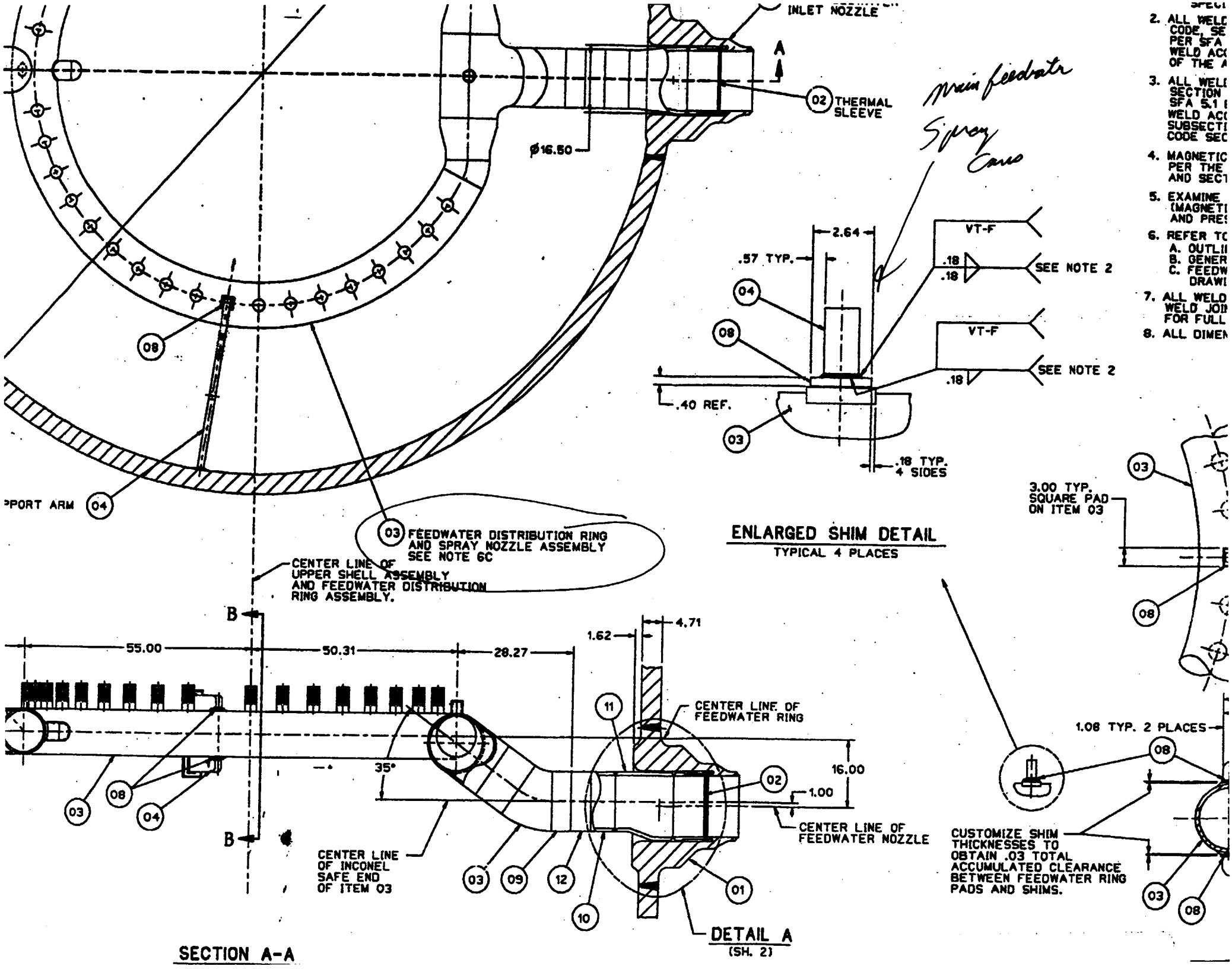
INLET NOZZLE
A
02 THERMAL SLEEVE
Main feedwater Spray Cone
ø16.50
08
04
PPORT ARM
03 FEEDWATER DISTRIBUTION RING AND SPRAY NOZZLE ASSEMBLY SEE NOTE 6C
CENTER LINE OF UPPER SHELL ASSEMBLY AND FEEDWATER DISTRIBUTION RING ASSEMBLY.
2.64
.57 TYP.
VT-F
.18
.18
SEE NOTE 2
VT-F
.18
SEE NOTE 2
.40 REF.
.18 TYP. 4 SIDES
ENLARGED SHIM DETAIL
TYPICAL 4 PLACES
3.00 TYP. SQUARE PAD ON ITEM 03
1.08 TYP. 2 PLACES
CUSTOMIZE SHIM THICKNESSES TO OBTAIN .03 TOTAL ACCUMULATED CLEARANCE BETWEEN FEEDWATER RING PADS AND SHIMS.
B
55.00
50.31
28.27
1.62
4.71
11
CENTER LINE OF FEEDWATER RING
35°
16.00
1.00
CENTER LINE OF FEEDWATER NOZZLE
CENTER LINE OF INCONEL SAFE END OF ITEM 03
03
09
12
10
01
DETAIL A
(SH. 2)
SECTION A-A
2. ALL WELD CODE, SE PER SFA WELD AC OF THE A
3. ALL WELD SECTION SFA 5.1 WELD AC SUBSECTI CODE SEC
4. MAGNETIC PER THE AND SECT
5. EXAMINE (MAGNETI AND PRES
6. REFER TO A. OUTLI B. GENER C. FEEDW DRAWI
7. ALL WELD WELD JOI FOR FULL
8. ALL DIMEN

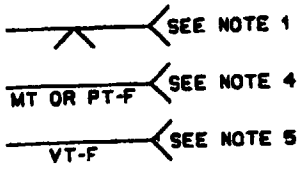

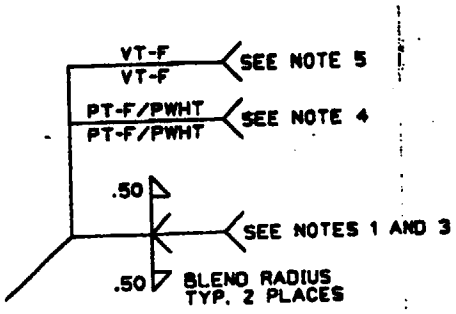

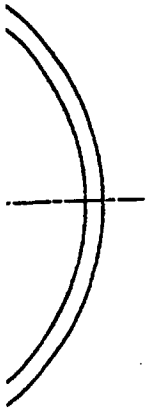

2

TYP.

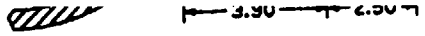

DETAIL E

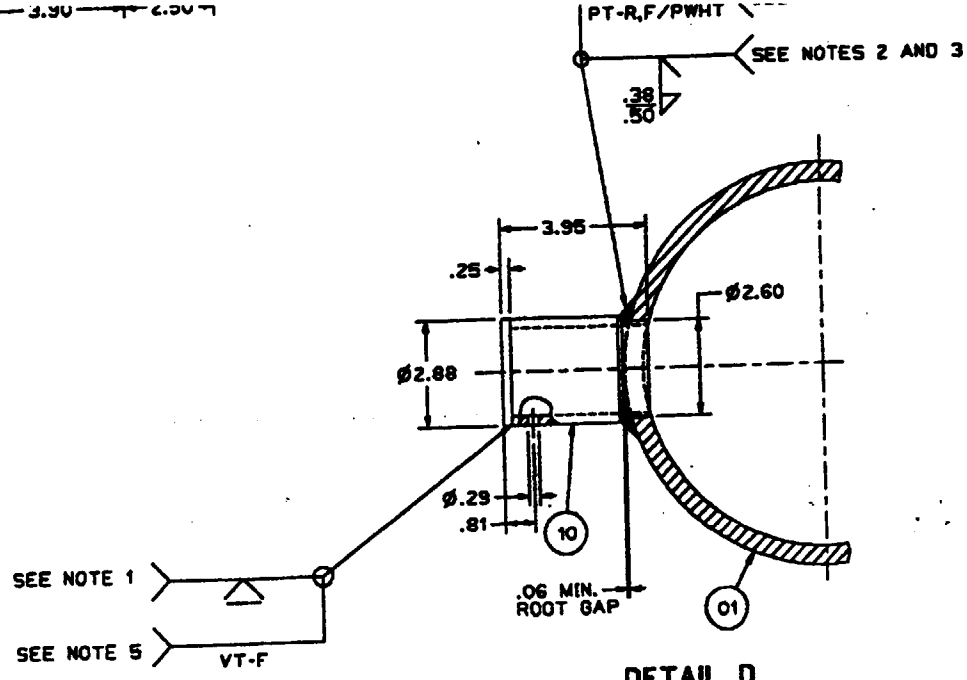

DETAIL D

Main feedwater spray can openings

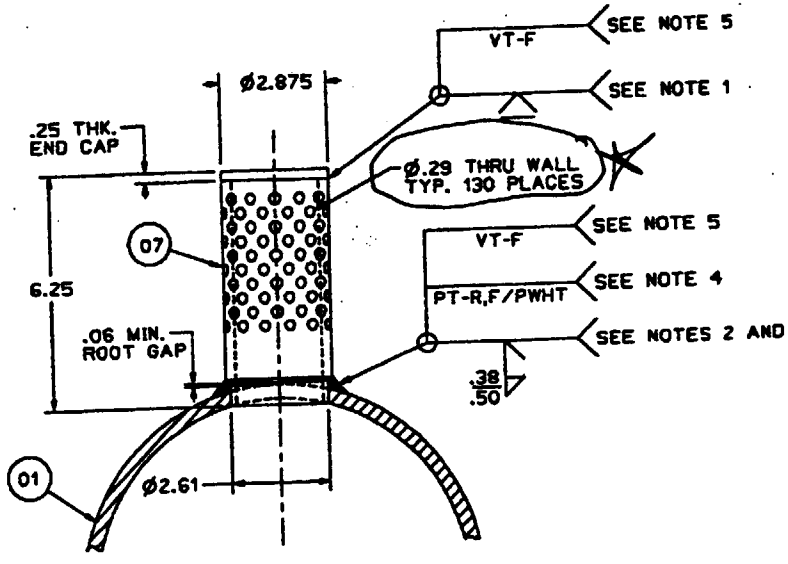

DETAIL C

TYP. 34 PLACES

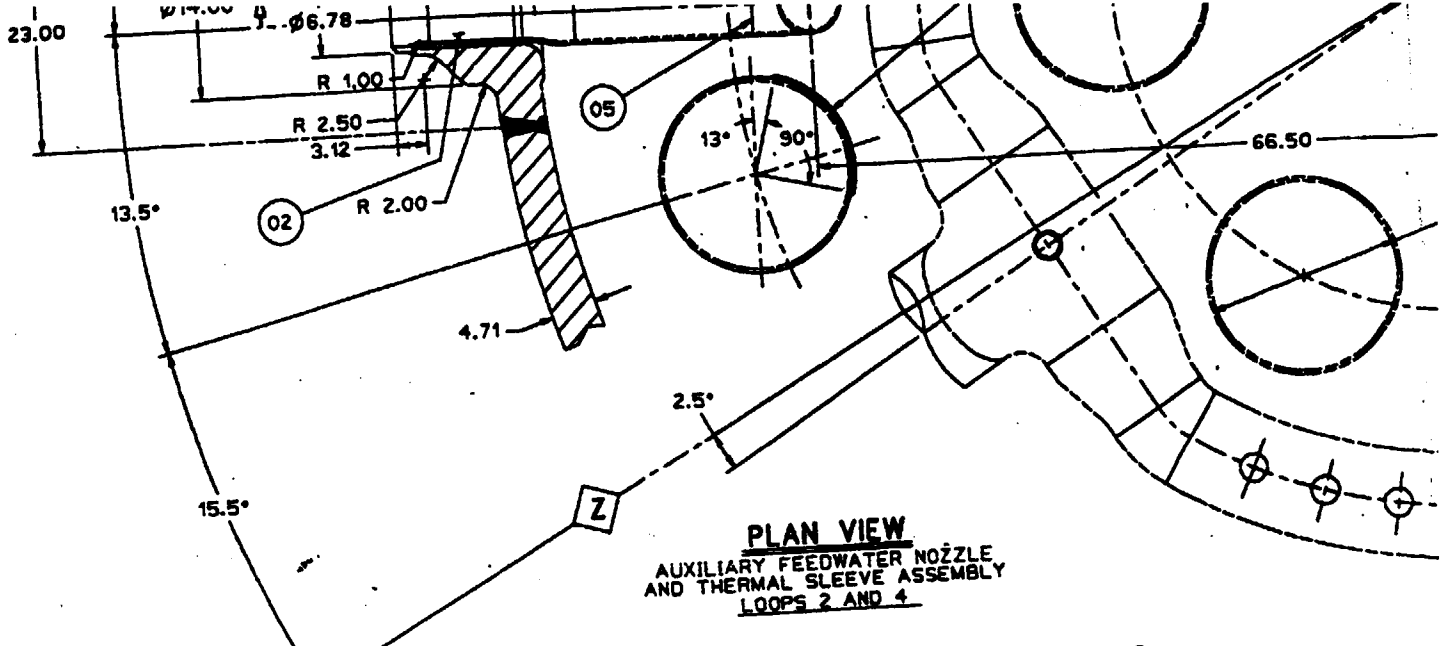

PLAN VIEW
AUXILIARY FEEDWATER NOZZLE
AND THERMAL SLEEVE ASSEMBLY
LOOPS 2 AND 4

Aux Feedwater spray Can

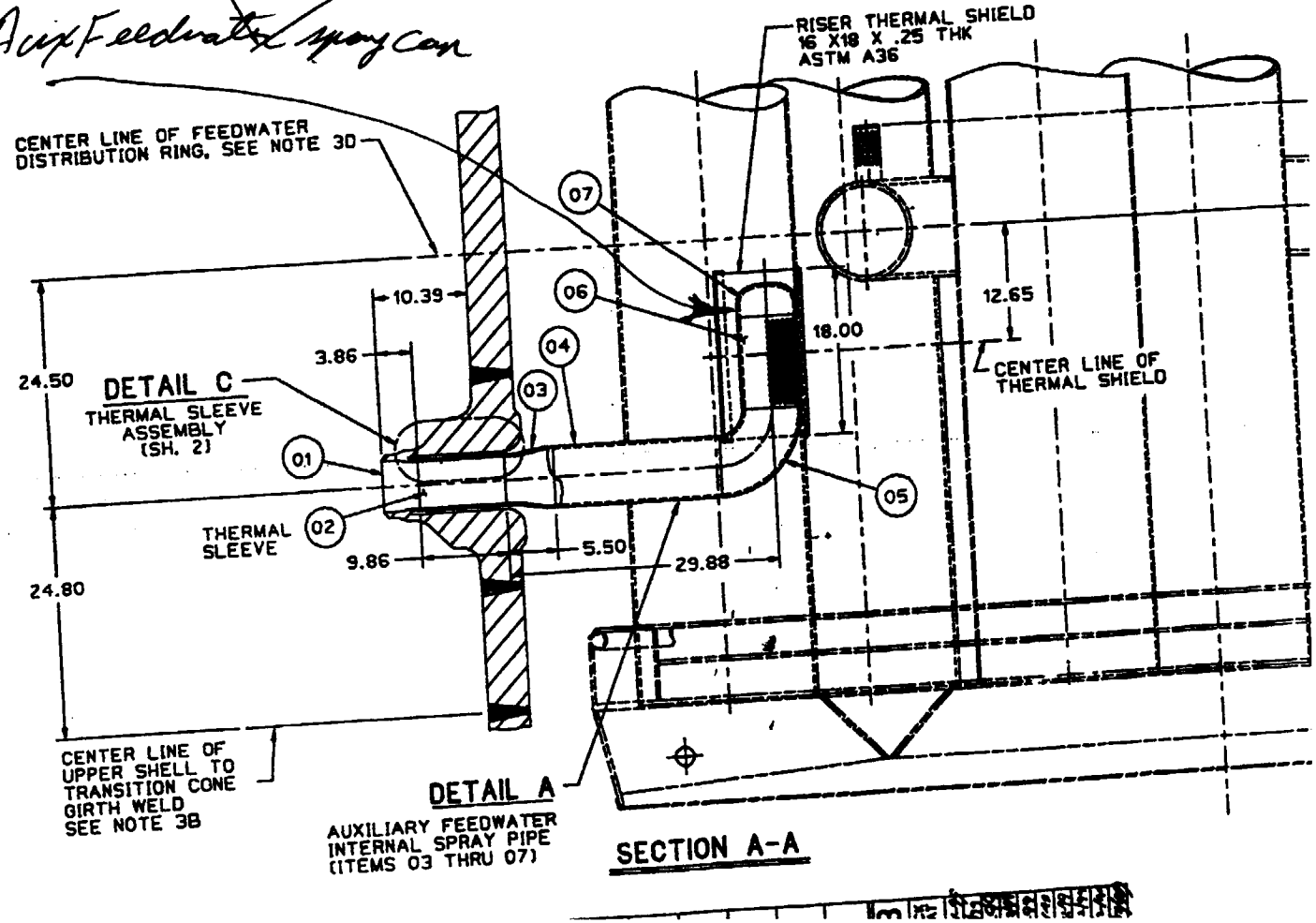

SECTION A-A

DRAWING 6465E17.

4. ALL WELD JOINT DIMENSIONS AND ANGLES SHOWN ARE FOR INITIAL WELD JOINT FITUP. CONSUMABLE INSERTS MAY ALSO BE USED. ALL WELD JOINTS ARE FINAL WELDED AND INSPECTED FOR FULL PENETRATION WELDS UNLESS OTHERWISE SPECIFIED.

5. LIQUID PENETRANT EXAMINE WELD PREPARATIONS AND WELDS PER SUBSECTION NG-5350 OF THE ASME BOILER AND PRESSURE VESSEL CODE.

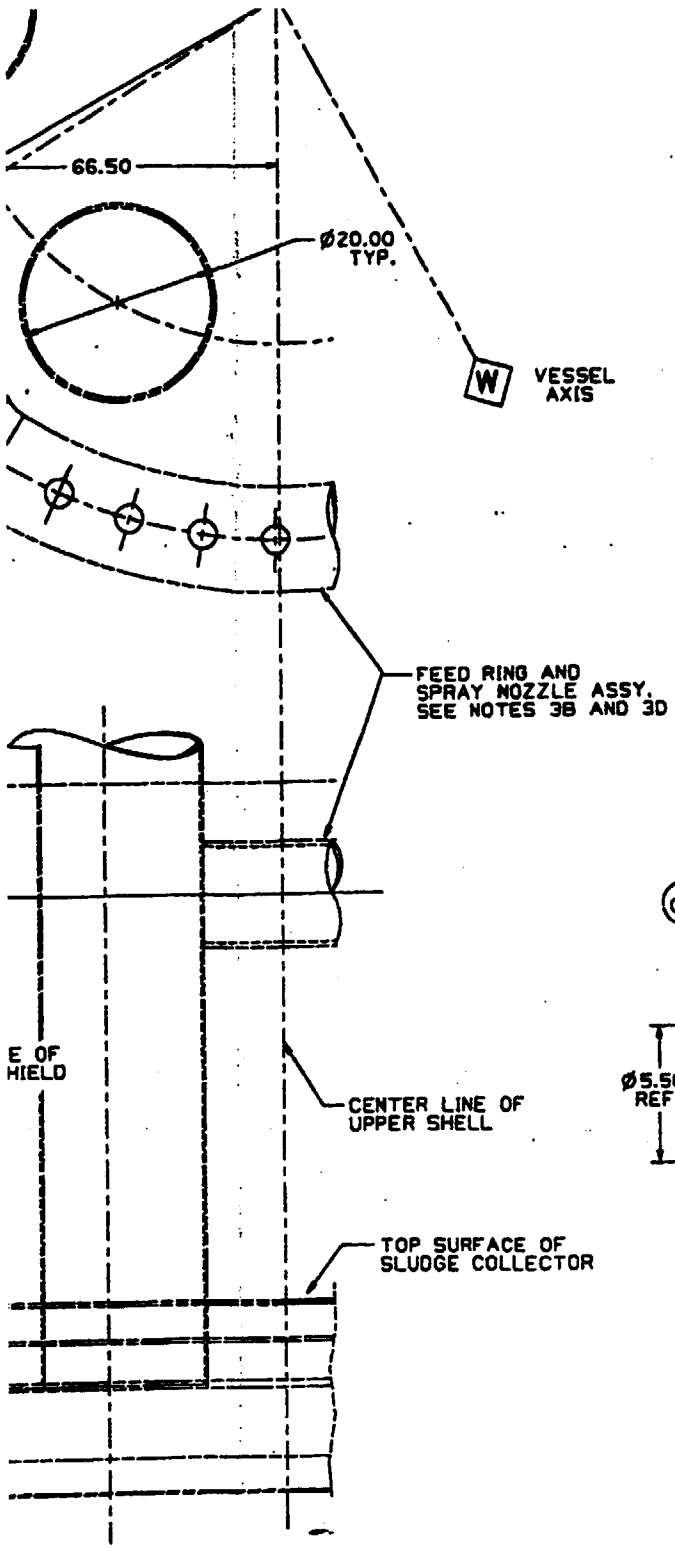

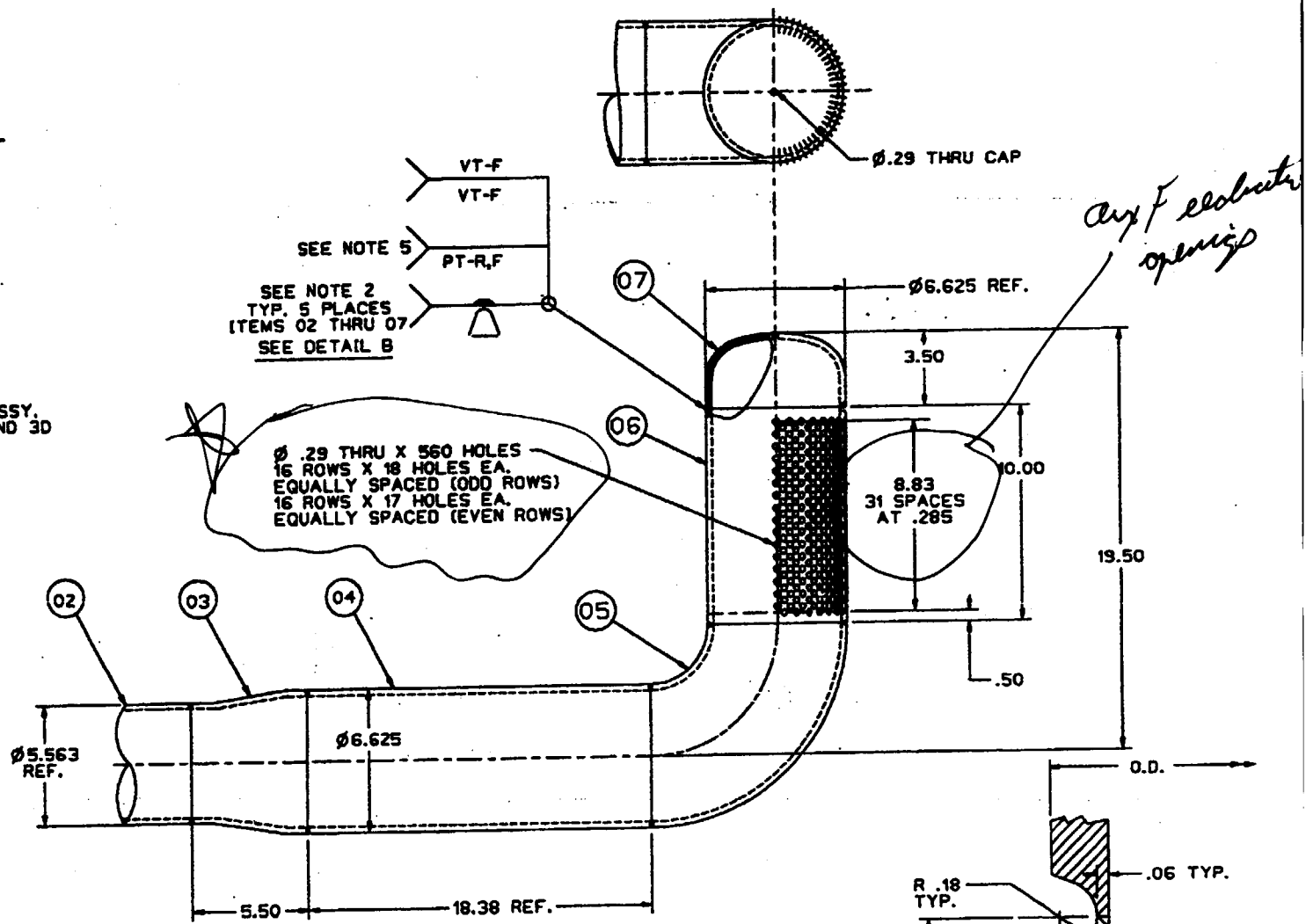

DETAIL A
AUXILIARY FEEDWATER INTERNAL SPRAY PIPE

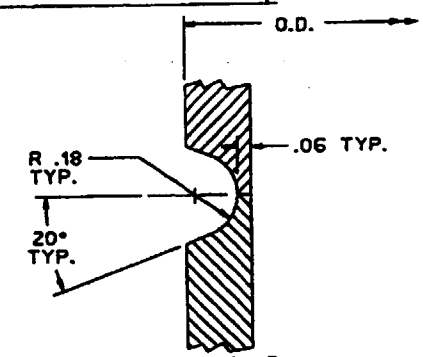

DETAIL B
TYPICAL 5 PLACES
SEE NOTE 4

WESTINGHOUSE PROPRIETARY DATA

Westinghouse Electric Company LLC
NUCLEAR PROJECTS DIVISION - PENSACOLA, FL. U.S.A.

SOUTH TEXAS NUCLEAR STATION
STEAM GENERATOR AUXILIARY FEEDWATER NOZZLE AND THERMAL

Condition Report Engineering Evaluation

Form 1	Engineering Evaluation (Typical) { TC "Form 1 - Engineering Evaluation (Typical) " \f C \l "2" }	Page 1 of ___

CR# 01-13867-7

ORIGINAL

Condition/Action Summary

ISSUE DEGRDATION ASSESSMENT FOR 1RE10 BY CREE AND INCLUDE INTERUIM GUIDLINES OF AUG 31,2001 EPRI SGMP LETTER FOR NEW DAMAGE MECHANISMS.

Engineering Evaluation:

1. Westinghouse letter report SG-01-09-002 has been reviewed for incorporation and resolution of STP draft comments. Comments have been satisfactorily resolved.

2. Final logic charts for 1RE10 have been reviewed for incorporation of comments and are issued by this CREE for use during the 1RE10 outage.

3. By attachment August 31,2001 SGMP letter on, "Steam Generator Management Program's Interim Guidance for Utility Action in Response to Finding New Steam Generator Degradation" is incorporated into the 1RE10 Degradation Assessment. A Significant condition Adverse to Quality level Condition Report is required if a new damage mechanism not addressed by the Degradation Assessment is found during 1RE10.

The NRC has requested notification if any of the following occur during the 1RE10 inspection

1. a new active degradation mechanism
2. excessive degradation or higher than expected growth rates
3. Unexpected or unacceptable in-situ pressure test results, i.e., unexpected leakage, test failure, or failure to complete the test due to equipment limitations.

Additional Actions Required? ☑ **No** ☐ **Yes** **If Yes, list CR Action #s** _____

Approvals:

RL BAKER RLBaker 9/26/01	AC McIntyre AC McIntyre 9/27/01
Preparer (Print/Sign) **Date**	**Approval (Print/Sign)** **Date**

South Texas 1RE10

Degradation Assessment

Prepared by: _____ 9/20/01

D.D.Malinowski

_____ 9/20/01

H.O.Lagally

_____ 9/20/01

R.J.Pocratsky– Level III Analyst

Approved by: _____ 9-20-01

R.J. Sterdis, Manager Steam Generator Design and Analysis

To EPRI PWR SG Examination Guidelines, Revision 5

General

Guidance for justifying deviations from NEI 97-06 and its referenced EPRI Guidelines was added to NEI 97-06 as Appendix D. Techniques not qualified in accordance with Appendices H or J may be useful for diagnostic testing to aid in the evaluation of a specific condition or mechanism within a steam generator. The site-specific conditions being evaluated shall be mocked up to demonstrate the technique's capability prior to use. Mock-up demonstrations need not be performed if, through electro-magnetic theory, the condition being assessed by the non-qualified technique is understood. The field examination results should be evaluated and a basis for acceptance or rejection of a tube's condition shall be developed and documented. The justifications that follow fulfill the Appendix D requirements.

F.1 Examination of Expanded Tubesheet Regions with Bobbin Probes: Conditional Basis for Use of Bobbin Probes in theTubesheet Region in Delta 94 SGs

Introduction

This appendix provides the conditional basis for use of bobbin coil inspection for the South Texas 1 Delta-94SGs tubesheet areas for 1RE10 in accordance with the requirements of the EPRI guidelines, Revision 5. No MRPC examination programs are scheduled for the 1RE10 ISI; therefore the contingency related to the observation of circumferential cracks is only exercised in the event that special interest MRPC testing performed pursuant to confirmation of bobbin I-code indications should reveal the presence of one or more tubes with circumferential crack indications.

If circumferential cracking is detected below the bottom of the hydraulic transition, +Point examination of peripheral tubes shall be performed to a distance of 7" below the top of the tubesheet (TTS) or the bottom of the hydraulic expansion transition (whichever is greater). This value states a conservative depth for inspection from the TTS based on W* values documented in WCAP-14797, *Generic W* Tube Plugging Criteria for 51 Series Steam Generator Tubesheet region WEXTEX Expansions*, February 1997. An evaluation of currently available data is included to serve as the basis for compliance with the requirements of Revision 5 of the EPRI guidelines regarding the use of a "non-qualified technique". The experience Model F and F-type SGs, suggests that there will be no need for the +3"/-7" peripheral +Point inspection.

Background

The qualification of examination techniques for inspection of steam generator tubes under the EPRI PWR Steam Generator Examination Guidelines: Revision 5 is controlled by the provisions of Section 6 "System Performance" and implemented in accordance with Appendix H, "Performance Demonstration for Eddy Current Examination". (Herein after, *EPRI guidelines*, *Section 6*, and *Appendix H* will refer to the underlined titles.) Provision is made in Section 6 to employ techniques which are not qualified in accordance with Appendix H, if adequate justification is provided for its use and disposition (acceptance/rejection) criteria are defined that address tube integrity limitations.

Since the inception of commercial nuclear power, the prevalent mode of volumetric inspection of steam generator tubes has been the bobbin probe eddy current technique. Bobbin coil examination has been useful for identification of tube profile variations, volumetric tube degradation, and axial stress corrosion cracking (SCC) in straight tubing. The coincidence of cracking with tube-profile discontinuities, such as expansion transitions, small radius U-bends, and dents, challenged the capability of the bobbin probe technique. Tube pull results identified cracks whose penetrations exceeded the Technical Specifications plugging limits; in some cases, the presence and/or depth had not been adequately reported from the bobbin techniques. Subsequently, greater reliance was placed on application of techniques with improved signal-to-noise characteristics.

Beginning with Revision 3 of the EPRI guidelines, recommendations were presented to assist utilities and NDE practitioners with the selection of adequate techniques for the detection and sizing of specific degradation mechanisms. The criteria for technique qualification were detailed in Appendix H. This development followed the rise of alternate plugging criteria for tubesheet zone cracking (F*, P*) and tube support plate ODSCC. In 1994 the industry undertook to implement degradation specific management. This concept permits development and use, with appropriate justification, of alternate plugging criteria for all forms of tube degradation. The NRC asserted that strict requirements for NDE performance would be a necessary condition of any such program. Revision 5 of the EPRI guidelines was issued to satisfy the NRC's objectives that the steam generator inspection sampling, examination, and evaluation recommendations are adequate to support regulatory requirements for tube integrity and operability.

Adherence to the EPRI guidelines requires that utilities perform the three degradation assessments detailed in NEI-97-06. These elements are as follows:

1. Degradation Assessment: Utilities must determine the likely or actual degradation modes that might impact tube integrity in the plant steam generators prior to each inspection. This includes devising adequate inspection programs, identifying examination techniques appropriate to detect and size the potential degradation, and providing site specific performance demonstrations for both the qualified techniques and the Qualified Data Analysts (QDAs).

2. Condition Monitoring: Utilities must conduct such evaluations of the inspection results as will determine whether the tube structural margins required under the provisions of Reg. Guide 1.121 were preserved during the operating interval which preceded the inspection.

3. Operational Assessment: Utilities must demonstrate by projection from the inspection results, progression rates, and measurement uncertainties that the tube structural margins required by Reg. Guide 1.121 will be preserved during the contemplated operating interval, and that leakage and tube burst probabilities will not exceed licensed limits for the plant.

Condition monitoring and operational assessment require that the POD (probability of detection) and measurement uncertainties for the qualified examination techniques not only be known but that they be sufficient to support the tube integrity evaluations. It may be necessary to substitute for proposed techniques if the measurement uncertainties of a proposed technique are not adequate to support the condition monitoring objectives. In general, consistency with the EPRI guidelines is based on using qualified techniques for existing or potential degradation mechanisms.

Tubesheet Region Bobbin Probe Qualification Status

There has been no Appendix H qualification of bobbin coil inspection techniques for SCC in expanded tubesheet configurations. For tubes with hard roll expansions, this deficit has been overcome by the use of qualified rotating coil techniques in the F* region in the upper portion of the tubesheet; typically 3″ of the upper tubesheet is examined with rotating coil techniques. The bobbin inspection of the lower 18-20″ of the tubesheet is rendered moot since the condition of the tube below F* does not impact operability of the steam generators.

For tubes expanded with WEXTEX explosive technique, an alternate plugging basis (W*) has been developed and has been licensed for one 2-unit station. The presence of circumferential cracking cannot be accommodated in the required sound-tube engagement length below the TTS or the bottom of the WEXTEX transitions whichever is lower. For tubes with hydraulic expansion in the tubesheet, such as are found in Model F SGs, F-type replacement SGs, and the "Delta" SGs, no alternate plugging criteria (e.g., H*) is licensed. It is believed that H* would require examining a tube length in the upper tubesheet, at least as long as the W* length for WEXTEX-expanded tubes, with qualified rotating coil techniques.

Justification of the operability of the steam generators must be provided, notwithstanding the qualification status of the bobbin technique. Alternatively, the tubesheet regions (at least the hot leg) in plants with hydraulic expansion and

WEXTEX plants not licensed for W* must be examined full length with a technique qualified for these regions, such as rotating coil techniques or Cecco-5 probes. Neither PWSCC nor ODSCC is regarded as a potential damage mechanism for the tubesheet region of the Delta 94 SGs. Thus for the South Texas 1 Delta-94SGs, the bobbin probe inspection of the hydraulically expanded tubesheet region is regarded as qualified for detection of the non-crack origin, volumetric indications and for PWSCC.

Relevant Industry Experience

The examination of Model F and F-type replacement SGs for degradation in the hydraulically expanded tubesheet regions has been performed since 1979 with conventional bobbin coil techniques. More than 30 plants with these types of SGs have employed such inspection practices, over a cumulative operating history exceeding 150 years. One plant -with Model F SGs tubed with Alloy 600 TT- experienced SCC related to dents just above the top of the tubesheet; the dents were found to have resulted from corrosion of Carbon steel shot, which deposited around the tubes at the top of the tubesheet. Several tubes were reported to have permitted small primary to secondary leakage. This degradation experience is not directly relevant to the tubesheet examination issue, but it does establish a potential for SCC in thermally treated tubing under highly stressed conditions.

Degradation below the expansion transition has been found in only one of the plants with hydraulic expansion. The affected plant experienced circumferential PWSCC in the expansion transitions and as low as 5.8″ below the top of the tubesheet on mill annealed Alloy 600 tubing (Plant FC - 1999). A small number of Alloy 600 TT tubes were also repaired for indications in this region; however, Westinghouse senior NDE personnel later judged that the indications on these tubes should be attributed to non-relevant conditions. The repair of those tubes therefore represents an administrative conservatism applied in the absence of pulled tube verification of the actual condition. This particular Model F plant is the only one whose tubing has not been fully subjected to thermal treatment to enhance resistance to SCC; as such its experience is not considered typical of the Model F population. In this plant and in all other Model F steam generators operated since 1979, there have been no incidents of tube leakage attributed to tubesheet region degradation mechanisms (LTR-CDME-01-2 Rev.1, *Operating Experience Westinghouse Model F and F-type Steam Generators*, March 2001). Thus the experience of the thermally treated tube population and the inspection practices have been excellent.

Inspection Issues

The following is the basis for justification of the use of bobbin probes for inspection of hydraulically expanded tubesheet regions in the Delta 94 SGs and other 2nd SGs. Although it remains an option, full-length +Point inspection of a 20%-40% sample of each SG has significant cost and schedule impacts, which are

not warranted given the low incidence of tubesheet region SCC and the low likelihood of operational consequences. Adherence to NEI-97-06 Rev.1 guidelines entails the use of the Revision 5 of the EPRI Guidelines, which includes a more complete method of addressing probe qualification. For the examination of tubesheet segments for ID cracking in the 2nd SGs, the relevant experience upon which to base the degradation assessment is that of hydraulically expanded, Alloy 600 TT tubing as well as the growing body of Alloy 690 TT experience. To date there has been no confirmed identification of SCC in hydraulically expanded tubesheet sections of thermally treated tubes in Delta series, Model F, or in F-type replacement SGs currently in service. Tube pulls performed to investigate possible indications of ODSCC in hydraulic expansion transitions at Plant AB (Alloy 600 TT) proved that no degradation existed (Exelon letter BYRON-2001-5003: Attachment Byron Unit 2 Inspection Degradation Assessment and Condition Monitoring Checklist for B2R09); the false calls were attributed to unresolved effects including local profile variations, tubesheet entrance, and deposit signals.

The most likely location for circumferential indications, should they actually occur, would be the hydraulic expansion transition, since operating experience of Plant FC has shown that the occurrence of circumferential cracks in the Alloy 600 MA tubing is predominantly found within ± 1/4" from the TTS. Circumferential cracks below the bottom of the hydraulic expansion transition could be identified by the +Point examination of that region. The length below TTS +Point MRPC inspection length must be sufficient to prevent the existence of circumstances whereby a postulated, separated, non-peripheral, active tube (separated at < ~2" below the TTS) could lift out of the tubesheet; this distance a function of the length a severed tube can displace before it is "captured" in the U-bend by the tube(s) in higher rows. Structural integrity positions in the condition monitoring / operational assessment can utilize tube-to-tube interaction in the U-bend region to limit the potential for a postulated tube rupture. Separation of the tube with subsequent lifting of the tube end out of the tubesheet by the pressure end cap load is thereby prevented for non-peripheral tubes. For a peripheral tube, adequate structural integrity can only be established if the tubes retain sufficient resistive load capability. The assumption of the postulated, circumferentially separated, active tube being lifted out of the tubesheet does not take into consideration resistive load capability at TSP intersections, bending restraint provided by the U-tube shape, or any residual axial load capabilities in the expanded length above a flaw.

A postulated, circumferentially separated tube in the periphery would not have outer tubes with which to interact in the U-bend, and the potential for a large leakage or tube rupture event would exist for circumferential indications found below the hydraulic expansion transition. +Point rotating probe inspection would be required for the engagement length (plus an allowance for measurement error) below the TTS. The region to be inspected would consist of a minimum 2-tube annulus along the periphery of the tube bundle in which the absence of potential

conditions that challenge structural integrity should be verified. The specific minimum inspection length for hydraulic expansions in peripheral tubes has not been calculated. Evaluations for WEXTEX-expanded HL tubes in 51 Series SGs, determined that a sound 5.2" engagement length is sufficient to prevent a postulated, active, peripheral tube, circumferentially separated at > 5.2" below the TTS from being lifted out of the tubesheet by pressure end cap loads. The corresponding CL engagement length is 5.5". A length greater than the minimum examination length for WEXTEX tubes should be employed with hydraulic expansions; an inspection length of at least 7" below the top of the tubesheet or bottom of the hydraulic expansion, whichever is lower, would be appropriate based on engineering judgment. An uncertainty value representing the 95% one-sided confidence interval for the observed distribution of axial length error measurements for rotating probes should be added to the inspection length.

In the event that circumferential cracking is detected below the bottom of the hydraulic expansion transition in the TTS +Point program, inspection of approximately 250 HL peripheral tubes in each affected steam generator would be required. The extent of inspection would encompass at least 7" below the TTS or the bottom of the hydraulic transition, whichever is lower; this includes 0.33" allowance for NDE error, including both length (Table 2-2) and position errors (WCAP-14797).

Assessment of Bobbin Detection of Limiting Indications Within Tubesheet

To support the use of this "non-qualified technique", Westinghouse evaluated the reliability of bobbin probe detection for conditions at the limit of acceptance with respect to structural integrity of the tubes. Since tube burst is not a potential event inside the tubesheet, the consequences of tube leakage at the limiting degradation were the focus of the testing. Detection of a 100% depth, 0.5" long axial flaw with the standard bobbin technique was the basis of the assessment.

Bobbin eddy current data from the 50% depth EDM notch population assembled for the W* program were examined to determine the detection performance of the bobbin probe for ID flaws in the straight expanded section in the tubesheet. A 0.5″ long 100% EDM notch on EDM slot standard (AE-01-90) gives ~ 74 volts signal amplitude (peak to peak) at the typical bobbin calibration settings (4 x 20% flat bottom holes set to give 2.75 volts in the TSP suppression mix channel). The voltage of a crack of similar dimensions is expected to be approximately 20% of the EDM notch voltage, i.e., ~ 15 volts; a practical example illustrating this estimate is found in the case of model boiler sample #557-4 in EPRI NP-7480-L, Addendum 1 S550-17 Final Report, November 1996. In that case the voltage response of 15.5 volts is derived from a 0.52" crack with 0.44" determined to be throughwall by destructive examination. The response of 50% EDM notches is expected to be about 10% that expected for a 0.5″ long through wall crack (Figure 3-3, EPRI NP-7480-L, Vol.1 Revision 2, August 1996). Therefore it was

assessed that, if the bobbin technique could reliably detect the 50% depth EDM notches, the detection of the limiting 100% crack would be assured.

The evaluations were conducted using bobbin probe analysis guidelines typical of those applied for most SG inspections. A total of nine tube specimens that contained 21 notches were analyzed; 100% of the notches present were successfully detected. The analysis team consisted of a primary analyst, a secondary analyst and a resolution analyst, each functioning in a role identical to his field analysis function. All notches were detected by each analyst, but the results on one tube presented a discrepancy arising from the fact that four notches present were not axially resolvable in the opinion of the resolution analyst and the secondary analyst. This tube may be counted as one extended flaw, reducing the available 50% ID axial grading units to eighteen. The amplitudes observed for these notches of various lengths ranges from a minimum of 1.98 volts to 7.20 volts. This result, 100% detection, is equivalent to 80% detection at 98% confidence, and warrants the judgment that ID cracks more severe than the 0.5" long 50% depth ID flaw will be detected.

Inspection Recommendation

Since both ODSCC and PWSCC in the hydraulically expanded tubesheet region are regarded as non-relevant damage mechanisms for the Delta 94 SGs, there is no requirement to establish the qualification of the bobbin probe technique for detection of cracks. In the event that cracking should be discovered during an ISI, the condition developed above will be operative.

Given the satisfactory demonstration of the bobbin probe's capability to detect axial cracks in expanded tubesheet sections before they exceed the leakage-based limits, the bobbin probe is conditionally acceptable for examination of tubing in South Texas 1 SGs. In the event that circumferential cracking is identified in the region below the bottom of the hydraulic transition, examination of peripheral tubes for circumferential cracking must be performed to a distance of at least 7" (HL) below the top of the tubesheet (TTS) or the bottom of the hydraulic expansion transition (whichever is greater). Tubes reported with bobbin flaw indications will be subject to specific evaluation and will be repaired upon confirmation of the flaw analysis.

F.2 Inspection Of Less Than 4 Steam Generators

The Tech Spec requires inspection of 12% of the total tubes in all of the SGs, plus tubes with known, pre-existing, indications in the SGs opened for inspection. The EPRI Guidelines, Rev. 5 requires inspection of 20% of the total tubes in all of the SGs at each outage, and limits the maximum operating period between inspections of any SG to 2 cycles. Tradeoffs between the number of SGs opened and the size of the sample of tubes inspected are permitted, as long as the requirements for total number of tubes inspected and the incremental time between inspections are met.

Section 4.3 of the EPRI Guidelines (TR-107569V1R5) requires 100% examination of all tubes in all steam generators after the first cycle of operation of replacement SGs. The EPRI SG Guidelines document, in its introductory section (Section 1.2), recognizes that deviations from its recommendations require technical justification and, where appropriate agreement between the plant operator and the cognizant regulatory body.

This Appendix provides justification for South Texas 1 to inspect two SGs every ISI. Two-cycle operation between inspections of any individual SG is acceptable per Tech. Spec. if an acceptable operational assessment is obtained for the planned operation interval even though the damage mechanism is designated as "Active" in one, or more, SGs. If 1 or more tubes exhibit ≥ 40% degradation, the Tech. Specs. do not, as a consequence, require inspection in all SGs during every ISI if the growth of the ≥ 40% TWD indication is <10%. The basis for the conservative EPRI Guidelines, Rev. 5 requirement to inspect all SGs each outage is to minimize the likelihood that the structural limit will be exceeded during an extended period between ISIs.

Allowance for growth on in-service tubes, with BOC wear indications as great as 39%, must represent the 95% cumulative value for the most severely affected SG. The combination of measurement total uncertainty (@ 95% CL) and the 2-cycle growth rate allowance with the maximum depth indication remaining in-service (e.g., 39%) must not exceed the structural limit (typically around 75%) at the end of the second cycle of the operating interval. All other material and operational conditions being equal, this provides a satisfaction of Reg. Guide 1.121 on a deterministic basis.

The inspection history of the South Texas 1 original SGs is not relevant to an assessment of growth rates in the South Texas 1 Delta 94 SGs. The growth rates will be determined under two assumptions:

1) Growth rate based on those indications that were reported with depth (%) calls at both inspections, plus the results of a "lookback" evaluation for indications observed for the first time. This permits an increased population of indications, improving the statistical adequacy of the resulting growth calculation. For 1RE10 the observed indications, if any, are directly indicative of growth since the prior inspection was the PSI.

2) For inspections in subsequent outages, growth rates determined using all indications reported during the later inspection, and assuming that indications not reported in the prior inspection were at a threshold TWD. This is appropriate and is consistent with the recommendations of the EPRI Steam Generator Integrity Assessment Guidelines, EPRI TR-107621 Revision 1, for developing growth rates.

The most descriptive growth rates are those that are developed from a complete and systematic lookback analysis.

F.3 Disposition Of Tube End Cracking

The occurrence of tube end cracking has been observed in once-through SGs and in a plant with Westinghouse Model 51 SGs. The cracking was found in the protruding stub of the tube below the roll zone in a partially expanded tubesheet. In this event the SG was equipped with mill annealed Alloy 600 tubing, which has exhibited susceptibility to PWSCC in deformed sections, such as those associated with expansion transitions or overlaps, dented TSPs, and tight radius U-bends.

Tube end cracking has very little probability for occurrence in the South Texas 1 Delta 94 SGs, since this mechanism has been observed only in SGs equipped with mill annealed Alloy 600 tubes. The Alloy 690 TT tubes in the South Texas 1 SGs provide improved resistance to cracking of all types (WNEP-9901, "Basis for Selection of Steam Generator Heat Transfer Tubing", January 1999); moreover, no confirmed incidents of SCC in thermally treated tubes have been reported for any of the U.S. Model F or F-type replacement SGs (LTR-CDME-01-2 Rev.1). Thus examination of this region need not be performed for this non-relevant mechanism, unless and until the occurrence of stress corrosion cracking below the expansion transition has been demonstrated by relevant industry experience. The bobbin inspection described in Section F.1 is considered to be adequate for the tubesheet region.

F.4 Ultrasonic Testing To Resolve PVN Interference

The electromagnetic discontinuities produced in the presence of permeability variations in tubing alloys may result in eddy current signals capable of masking the signals from flaws representative of damage mechanisms. For ISI purposes, when PVN signals cannot be resolved by history lookup, magnetic probe examination, or engineering judgment, the use of ultrasonic testing (UT) affords a technique that is insensitive to local perturbations in magnetic properties of the material.

While shallow ODSCC may be detected from about 20% TW, consistent detection is achieved at TW depths exceeding 40% TW (ETSS96008.1 Revision 9). It has been convincingly demonstrated that UT has adequate sensitivity to detect cracks in SG tubing when they exceed the Tech. Spec. plugging criteria, i.e., 40% TW ("Steam Generator Tubes Crack Sizing by Ultrasonic and Eddy Current Methods with Adapted Expertise Probes", L.Gay, R.Herblot, and R.Bourgogne (Logitest-France) and R.Samson and N.Dube (RD/Tech-Quebec), 17th EPRI Steam Generator NDE Workshop, August 1998.) An evaluation of current UT techniques for sizing cracks was presented at the 17th EPRI Steam generator NDE Workshop ("Evaluation of Currently Applied Ultrasonic Techniques for Stress Corrosion Cracks in Steam Generator Tubes" (R703.DO05PRES), R.Krutzen, H Cummings Bodenschatz, Nuson Inspection Services, 17th EPRI Steam Generator NDE Workshop, August 1998); the authors concluded that the crack tip echo technique was most effective for sizing cracks. The essential requirement is that the transducer essential variables be appropriate for the type and orientation of the suspected condition. General detection of a stress corrosion cracks requires that broad bandwidth high frequency focused transducers be used, generating 45° shear waves in the material; this permits detection of both axial and circumferential cracks. Guided (Lamb) waves have also been studied; the results of experiments performed for EPRI ("UT Guide Wave Inspection of Heat Exchanger Tubing", J.Spanner, J.Rose, H.J.Shin, and C.Morris, 16th EPRI Steam Generator NDE Workshop, July 1997.), including a field demonstration at the McGuire station, has also been reported.

The principal drawback to the application of UT for SG tube inspection has been the cost in expended time to obtain useful data. Qualification of specific techniques under Appendix J of the EPRI guidelines will lead in short order to the general acceptance of UT service options. In Belgium, with regulatory scrutiny and endorsement, entire SG tubesheet expansion transition programs have been conducted with UT or by combined EC-UT techniques ("The Power of Multidisciplinary and Polyvalent Approach to Steam Generator Problem Solving", D.Degreve, Laborelec (Belgium), 16th EPRI Steam Generator NDE Workshop, July 1997.), in order to assure detection of circumferential cracks before they exceeded tube integrity structural limits. The use of phased-array UT devices has been studied to permit more rapid acquisition of data. In the absence of formally qualified techniques, the industry experience supports the capability of UT to detect consistently stress corrosion cracks that exceed the Tech. Spec. plugging criteria. This fact combined with the excellent experience of the 2nd SGs

with respect to historic damage mechanisms is ample justification for the optional use of UT to verify the absence of cracks in the presence of PVN signals.

F.5 MRPC Examination Schedule for Expansions, Dings, and Row 1 U-bends

Introduction

This section provides the basis for scheduling site qualified techniques programs for inspection for the South Texas 1 Delta-94 SGs expansion transitions, dings, and small radius U-bends as an exception to the requirements of the EPRI guidelines, Revision 5. No MRPC examination programs are scheduled for the 1RE10 ISI, because of the very low likelihood of occurrence of the degradation mechanisms targeted by MRPC programs. The PWR SG Examination Guidelines (Rev. 5) require that locations for which general purpose (bobbin probes) techniques are not qualified must be examined by site-qualified techniques; this objective is usually satisfied by use of MRPC probes, or other techniques as they become available. The degradation mechanisms to be addressed by MRPC testing are not known to have occurred in SGs with Alloy 690TT tubes; they are regarded as potential degradation mechanisms only because no material is deemed to be immune from ODSCC.