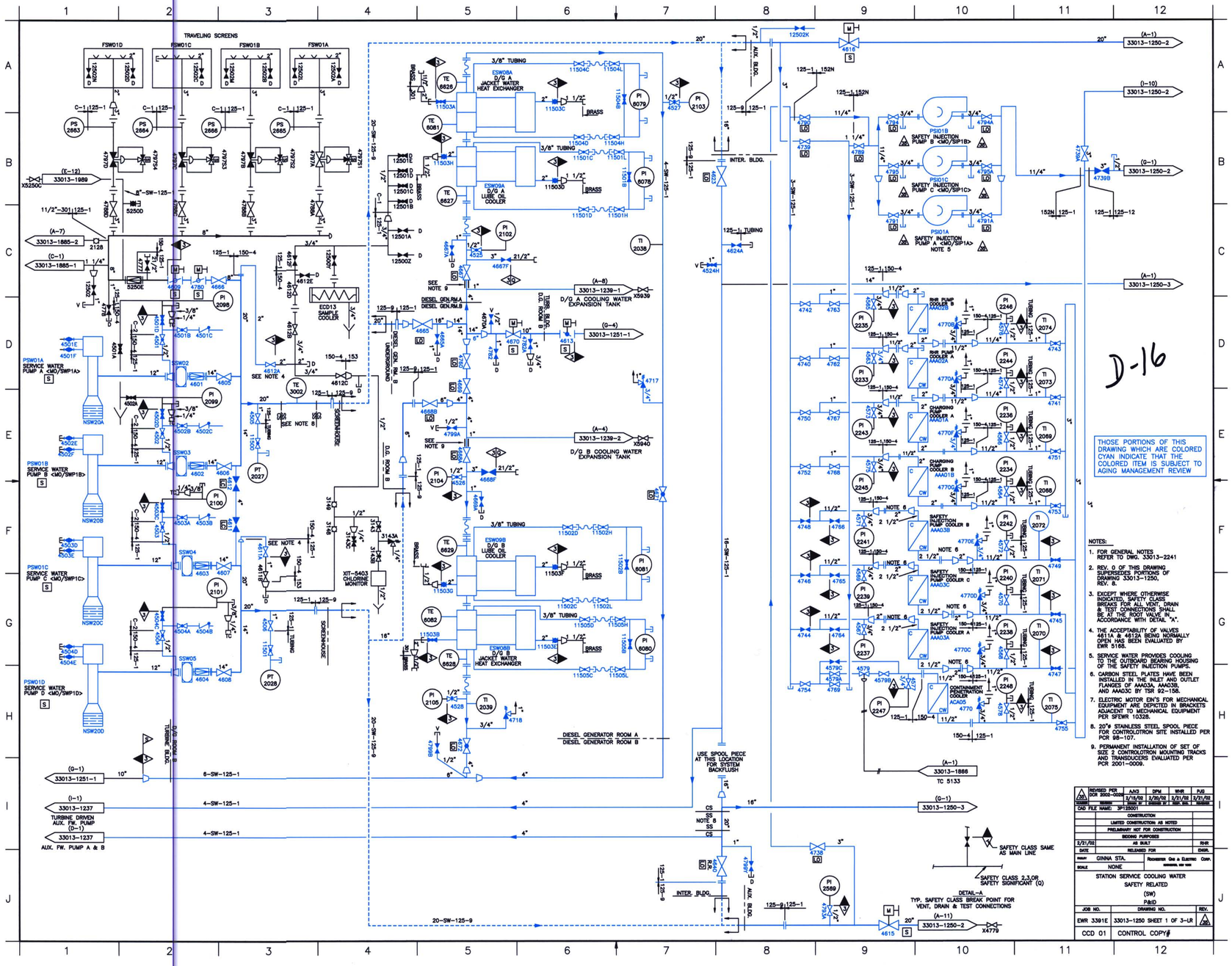

THOSE PORTIONS OF THIS DRAWING WHICH ARE COLORED CYAN INDICATE THAT THE COLORED ITEM IS SUBJECT TO AGING MANAGEMENT REVIEW

NOTES:

1. FOR GENERAL NOTES REFER TO DWG. 33013-2241
2. REV. 0 OF THIS DRAWING SUPERSEDES PORTIONS OF DRAWING 33013-1250, REV. 8.
3. EXCEPT WHERE OTHERWISE INDICATED, SAFETY CLASS BREAKS FOR ALL VENT, DRAIN & TEST CONNECTIONS SHALL BE AT THE ROOT VALVE IN ACCORDANCE WITH DETAIL "A".
4. THE ACCEPTABILITY OF VALVES 4611A & 4612A BEING NORMALLY OPEN HAS BEEN EVALUATED BY EWR 5166.
5. SERVICE WATER PROVIDES COOLING TO THE OUTBOARD BEARING HOUSING OF THE SAFETY INJECTION PUMPS.
6. CARBON STEEL PLATES HAVE BEEN INSTALLED IN THE INLET AND OUTLET FLANGES OF AAA03A, AAA03B, AND AAA03C BY TSR 92-158.
7. ELECTRIC MOTOR EIN'S FOR MECHANICAL EQUIPMENT ARE DEPICTED IN BRACKETS ADJACENT TO MECHANICAL EQUIPMENT PER SFEWR 10328.
8. 20"ø STAINLESS STEEL SPOOL PIECE FOR CONTROLOTRON SITE INSTALLED PER PCR 98-107.
9. PERMANENT INSTALLATION OF SET OF SIZE 2 CONTROLOTRON MOUNTING TRACKS AND TRANSDUCERS EVALUATED PER PCR 2001-0009.

REVISED PER DCR 2002-0026	AJCI	DPM	WHR	PJG
	2/15/02	2/20/02	2/21/02	2/21/02

CAD FILE NAME: 3P125001

CONSTRUCTION
LIMITED CONSTRUCTION AS NOTED
PRELIMINARY NOT FOR CONSTRUCTION
BIDDING PURPOSES
2/21/02 AS BUILT RHR
DATE RELEASED FOR ENGR.
SUBJECT GINNA STA. ROCHESTER GAS & ELECTRIC CORP.
SCALE NONE

STATION SERVICE COOLING WATER
SAFETY RELATED
(SW)
P&ID

JOB NO.	DRAWING NO.	REV.
EWR 3391E	33013-1250 SHEET 1 OF 3-LR	36

CCD 01 CONTROL COPY#