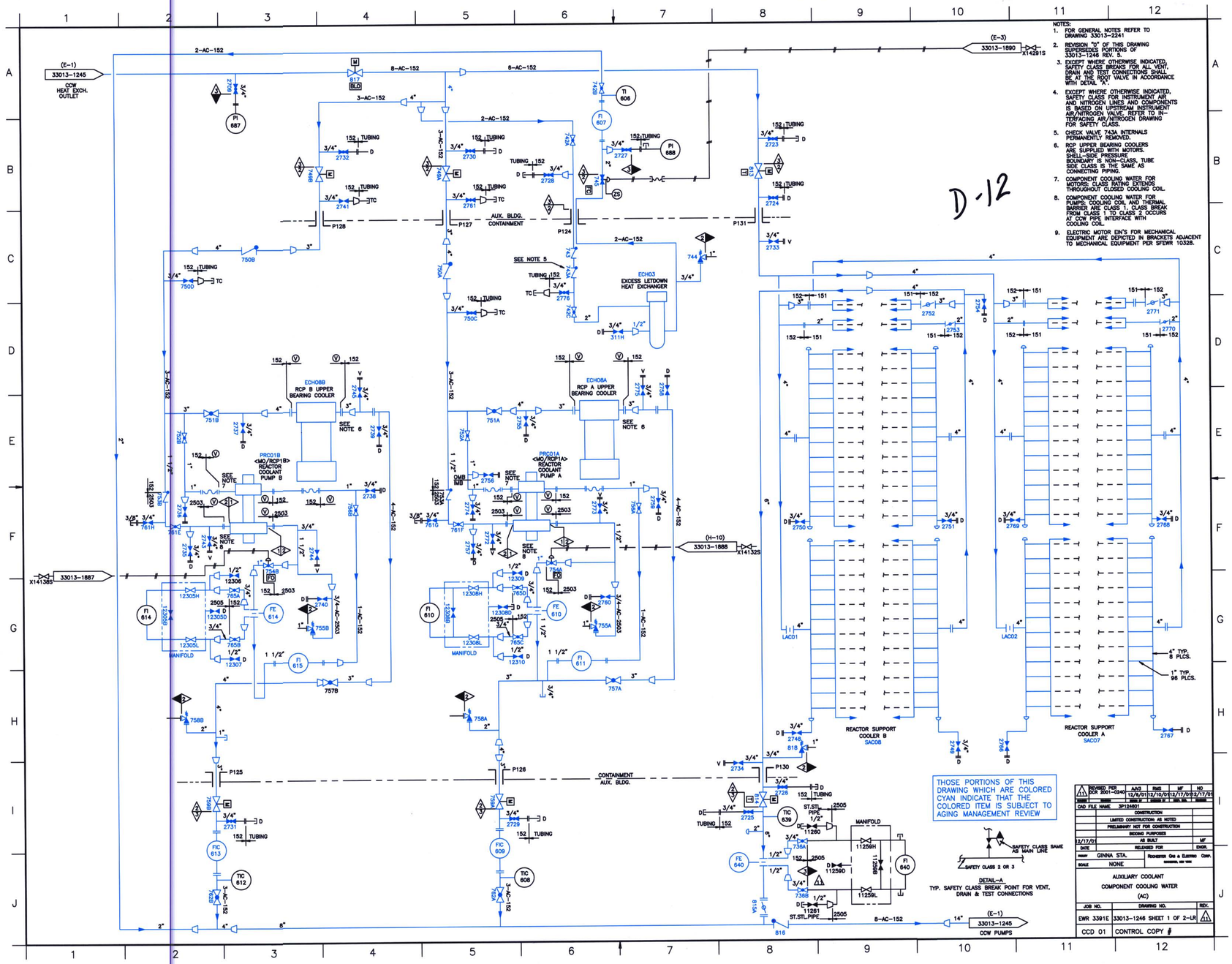

NOTES:

1. FOR GENERAL NOTES REFER TO DRAWING 33013-2241
2. REVISION "0" OF THIS DRAWING SUPERSEDES PORTIONS OF 33013-1246 REV. 5.
3. EXCEPT WHERE OTHERWISE INDICATED, SAFETY CLASS BREAKS FOR ALL VENT, DRAIN AND TEST CONNECTIONS SHALL BE AT THE ROOT VALVE IN ACCORDANCE WITH DETAIL "A".
4. EXCEPT WHERE OTHERWISE INDICATED, SAFETY CLASS FOR INSTRUMENT AIR AND NITROGEN LINES AND COMPONENTS IS BASED ON UPSTREAM INSTRUMENT AIR/NITROGEN VALVE. REFER TO INTERFACING AIR/NITROGEN DRAWING FOR SAFETY CLASS.
5. CHECK VALVE 743A INTERNALS PERMANENTLY REMOVED.
6. RCP UPPER BEARING COOLERS ARE SUPPLIED WITH MOTORS. SHELL-SIDE PRESSURE BOUNDARY IS NON-CLASS, TUBE SIDE CLASS IS THE SAME AS CONNECTING PIPING.
7. COMPONENT COOLING WATER FOR MOTORS: CLASS RATING EXTENDS THROUGHOUT CLOSED COOLING COIL.
8. COMPONENT COOLING WATER FOR PUMPS: COOLING COIL AND THERMAL BARRIER ARE CLASS 1. CLASS BREAK FROM CLASS 1 TO CLASS 2 OCCURS AT CCW PIPE INTERFACE WITH COOLING COIL.
9. ELECTRIC MOTOR EIN'S FOR MECHANICAL EQUIPMENT ARE DEPICTED IN BRACKETS ADJACENT TO MECHANICAL EQUIPMENT PER SPEWR 10328.