Mitigating Systems Performance Index (MSPI) Workshop

July 23 – July 25

Background (SSU PI And MSPI)

John W. Thompson
Office Of Nuclear Reactor Regulation
July 23, 2002

Why Change

- SECY 99-007 Addressed Need To Develop PIs
- Problems Identified With Current SSU PIs
  - Generic Thresholds
  - Demand Failures Not Properly Accounted For
  - No PIs For Support Systems
  - Current PIs Combine Design-Basis Functions With Risk-Significant Functions

Where We Are And What's Been Going On

- SSU PI Working Group Formed To Address Potential Change
- Guidance Documents Developed
- Baseline Values Established From AEOD, ROP, and Industry Data
- Industry Efforts Underway to Simplify Data Reporting
- Table Top Exercises Underway

Where We Are Headed

- Create A Better And More Accurate Indicator
- Run Current ROP Policy, SDP, and SSU PIs In Parallel With Pilot MSPI
- If 6-month Pilot Successful, MSPI Will Be Used For Risk Significance Characterization
- Over Course Of The Pilot, Various Approaches Will Be Evaluated
- Unintended Consequences Will Be Assessed Before Full Implementation

SSU PI Versus MSPI

Patrick Baranowsky
Office of Nuclear Regulatory Research
July 22, 2002

Problems With Current SSU PIs

- Generic Thresholds
- Demand Failures Not Properly Accounted For
- No PIs For Support Systems
- Current PIs Combine Design-Basis Functions With Risk Significant Functions

MSPI Approach

- Insights From Phase-1 RBPI Study:
  - Technically feasible to develop unavailability (UA) and unreliability (UR) PIs
  - Risk-significant differences among plants require plant-specific performance thresholds
  - Statistical approaches demonstrated ability to monitor UA/UR

MSPI Approach (Cont'd)

- Mitigating System Performance Index Approach
  - Combine UA/UR into one PI for each monitored system
  - Monitor changes in UA/UR for key trains/components based on impact on core damage frequency (CDF)
  - Use plant-specific models and data
  - Use simplified calculations based on relationships between UA/UR and risk importance measures

Limitations Of MSPI Pilot Program

- Inspection/SDP Used For Performance Areas Outside the Scope of MSPI
  - Common Cause Failures
  - Concurrent failures of multiple components
  - Passive components
  - Demand failures not capable of being discovered during normal surveillance tests

Limitations Of MSPI Pilot Program (Cont'd)

- During the Pilot, Various Approaches Will Be Evaluated As Well As Other Technical Issues:
  - Acceptable level of false-positive/ false-negative indication
  - Issues related to data used to set baseline UA/UR values
  - Evaluations of potential differences between MSPI and SDP results

Benefits of New MSPI

Stephen D. Floyd
Senior Director, Regulatory Reform
July 23, 2002

NEI

Industry Goal

- A common definition to be used by ROP, Maintenance Rule, PRA, and WANO
  - Ensure consistent basis for decision making
  - Avoid duplicate sets of records and associated burden

NEI

Overall Benefits

- Changes focus from design bases to risk-significant function
  - Promotes NRC and industry objectives of being more risk-informed
- Eliminates cascading of support systems
  - Consistent with Maintenance Rule implementation
  - More accurate portrayal of front-line system performance

NEI

Overall Benefits

- Eliminates fault exposure (T and T/2)
  - Measures unreliability directly – no need for surrogate approach
- Ties thresholds to plant-specific risk weighting factors
  - Acknowledges that systems/trains have varying risk importance

NEI

Overall Benefits

- Single demand failures not evaluated using SDP
  - Saves NRC and industry resources associated with SDP evaluations
- Simplifies Existing PI
  - No fault exposure or reset feature
  - No exemption for online maintenance
  - No accounting of required hours
  - Monitors at power functions only

NEI

Overall Benefits

- Permits balancing unavailability and unreliability consistent with Maintenance Rule
- Provides more objective indication of system performance and broader risk coverage with addition of cooling water support system

NEI

Mitigating Systems Performance Index

Gerry Sowers
Palo Verde Nuclear Generating Station

1

Indicator Requirements

- Provide a more risk-informed, plant specific, indication of mitigating system readiness.
- Include availability and reliability in the performance measure.
- Performance measured relative to industry performance in the baseline years 1995-1997.

2

References

- Background Reading Material
  - Risk Based Performance Indicators; NRC Research
  - Atwood, Corwin L., Constrained noninformative priors in risk assessment, Reliability Engineering and System Safety, 53 (1996; 37-46)
- Handouts For This Talk:
  - NEI 00-02; Appendix F
  - MSPI Technical Basis Paper
  - Copy Of Slides

3

Some Definitions

- MSPI - Mitigation Systems Performance Index
- URI - UnReliability Index
- UAI - UnAvailability Index
- UR - UnReliability
- UA - UnAvailability

4

Theory

Mitigating Systems Performance Index is defined as:

$$\text{MSPI} = \text{UAI} + \text{URI}$$

Relate each element to a contribution to an equivalent change in risk:

$$\text{MSPI} = \Delta CDF_{UA} + \Delta CDF_{UR}$$

5

Theory

Begin with the identity:

$$\Delta CDF_{UR} = \left[\frac{\partial CDF}{\partial UR} \right] * \Delta UR$$

Which is approximately (see basis document):

$$\Delta CDF_{UR} = \frac{CDF_P * FV_p}{UR_P} * \Delta UR$$

6

Theory - URI

For each monitored system this becomes:

$$URI = CDF_p \sum_{c=1}^{m} \left\{ \left[\frac{FV_{URc}}{UR_{pc}} \right]_{\max} (UR_{Bc} - UR_{BLc}) \right\}$$

Where the summation is over ***m*** monitored components in the system:

- Which are active or normally running, excluding check valves,
- Whose failure will result in the failure of a train, using PRA success criteria (all pumps and DG's <u>must</u> be included).

7

Theory - URI

$$URI = CDF_p \sum_{c=1}^{m} \left\{ \left[\frac{FV_{URc}}{UR_{pc}} \right]_{\max} (UR_{Bc} - UR_{BLc}) \right\}$$

- CDF_p is the plant-specific internal events, average model, at power, core damage frequency,
- FV_{URc} is the component-specific Fussel-Vesely value for unreliability,
- UR_{Pc} is the plant-specific PRA value of component unreliability,

8

Theory - URI

$$URI = CDF_p \sum_{c=1}^{m} \left\{ \left[\frac{FV_{URc}}{UR_{pc}} \right]_{\max} (UR_{Bc} - UR_{BLc}) \right\}$$

- UR_{Bc} is the Bayesian corrected component unreliability for the most recent 12 quarters,
- UR_{BLc} is the industry baseline unreliability mean value for each monitored component in the system.

9

Theory - URI

- CDF_p - Plant specific, internal events, at power, average model, per critical year (not calendar year) ***CDF***.

10

Theory - URI

To calculate the term: $\left[\frac{FV_{URc}}{UR_{pc}}\right]_{\max}$

Recognize that for a component with N logically equivalent basic events (see basis document):

$$\frac{FV_{be1}}{UR_{be1}} = \frac{FV_{be2}}{UR_{be2}} = \ldots = \frac{FV_{beN}}{UR_{beN}} = \frac{FV_{URc}}{UR_{pc}}$$

11

Theory - URI

- Identify all failure basic events related to the component under consideration, exclude common cause events.
- Find the failure probability and Fussel-Vesely values related to each basic event and calculate the ratio for each pair of values.
- Use the **MAXIMUM** ratio.

12

Theory - URI

To calculate the term: UR_{BLc}

Use the relation: $UR_{BLc} = P_D + \lambda T_m$

And the industry mean values from Appendix F, Table 2.

Component	Failure Mode	a [a]	b [a]	Industry Mean Value [b]	Source(s)
Motor-operated valve	Fail to open (or close)	5.0E-1	2.4E+2	2.1E-3	NUREG/CR-5500, Vd. 4,7,8,9
Air-operated valve	Fail to open (or close)	5.0E-1	2.5E+2	2.0E-3	NUREG/CR-4500, Vd. 1
Motor-driven pump, standby	Fail to start	5.0E-1	2.4E+2	2.1E-3	NUREG/CR-5500, Vd. 1,8,9
	Fail to run	5.0E-1	5.0E+3h	1.0E-4/h	NUREG/CR-5500, Vd. 1,8,9

P_D

λ

13

Theory - URI

To calculate the term: UR_{Bc}

Use the relation: $UR_{Bc} = P_D + \lambda T_m$

But this time use: $$P_D = \frac{(N_d + a)}{(a + b + D)}$$

$$\lambda = \frac{(N_r + a)}{(T_r + b)}$$

Where ***a*** and ***b*** are taken from Appendix F-Table 2.
(see RBPI and Atwood)

14

Theory - URI

IMPORTANT

In the calculation of P_D and λ, the number of demands, run hours, and failures are lumped together for all similar components (as categorized in Appendix F-Table 2) in a system.

15

Calculation - URI

PVNGS AFW System Monitored Components

2 MD Pumps (B & N)

1 TD Pump (A)

2 MOVs

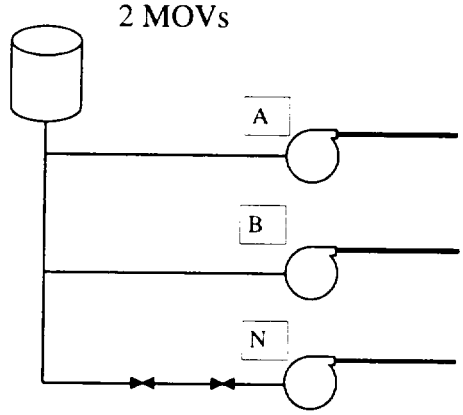

16

Calculation - URI

$$UR_{BLc} = P_D + \lambda T_m$$

Calculate Baseline UR value for each component type

Comp Type	P_D	λ	T_m	UR_{BLC}
MDP	2.10E-03	1.00E-04	24	4.50E-03
TDP	1.90E-02	1.60E-03	24	5.74E-02
MOV	2.10E-03	N/A	N/A	2.10E-03

17

Calculation - URI

$$UR_{Bc} = P_D + \lambda T_m$$

$$P_D = \frac{(N_d + a)}{(a + b + D)}$$

Calculate P_D for each component type

Comp Type	a	b	N_d	D	P_D
MDP	5.00E-01	2.40E+02	0	54	1.70E-03
TDP	4.70E-01	2.40E+01	0	24	9.70E-03
MOV	5.00E-01	2.40E+02	0	72	1.60E-03

18

Calculation - URI

$$UR_{Bc} = P_D + \lambda T_m$$

$$\lambda = \frac{(N_r + a)}{(T_r + b)}$$

Calculate λ for each component type

Comp Type	a	b	N_r	T_r	λ
MDP	5.00E-01	5.00E+03	0	210	9.60E-05
TDP	5.00E-01	3.10E+02	0	22	1.51E-03
MOV					

19

Calculation - URI

$$UR_{Bc} = P_D + \lambda T_m$$

Calculate System Specific UR_{Bc} value for each component type

Comp Type	P_D	λ	T_m	UR_{BC}
MDP	1.70E-03	9.60E-05	24	4.00E-03
TDP	9.70E-03	1.51E-03	24	4.58E-02
MOV	1.60E-03	0	0	1.60E-03

20

Calculation - URI

$$\left[\frac{FV_{URc}}{UR_{pc}}\right]_{\max}$$

AFB-P01 Events

Basic Event	Description	UR	FV	FV/UR
1AFBP01---MPAFS	AFW Pump B Fails to Start	6.73E-04	4.28E-02	6.36E+01
1AFBP01---XCPBFS	AFW Pump B Fails to Start (Cntrl Ckt Fault)	4.98E-04	3.15E-02	6.33E+01
1AFBP01---CBBFT	AFW Pump B Ckt Bkr PBB-S04S Fails to Close (Local Fault)	2.04E-04	1.28E-02	6.25E+01
1AFBP01---MPAFR	AFW Pump B Fails to Run 24 Hours	5.16E-04	2.15E-02	4.16E+01
Maximum				**6.36E+01**

21

Calculation - URI

$$URI = CDF_p \sum_{c=1}^{m} \left\{ \left[\frac{FV_{URc}}{UR_{pc}}\right]_{\max} (UR_{Bc} - UR_{BLc}) \right\}$$

Calculate URI for each component and sum them

CDF_P= 1.75E-05

Comp	FV/UR_P	UR_{BC}	UR_{BLC}	$CDF*FV/UR(UR_{BC}-UR_{BLC})$
AFA-P01	6.45E+00	4.58E-02	5.74E-02	-1.30E-06
AFB-P01	6.36E+01	4.00E-03	4.50E-03	-5.55E-07
AFN-P01	8.83E+00	4.00E-03	4.50E-03	-7.71E-08
CTA-001	6.04E+00	1.60E-03	2.10E-03	-5.28E-08
CTA-004	6.04E+00	1.60E-03	2.10E-03	-5.28E-08
URI				**-2.04E-06**

22

Theory - UAI

$$UAI = \sum_{t=1}^{n} UAI_t$$

Where ***n*** is the number of trains and,

$$UAI_t = CDF_p \left[\frac{FV_{UAp}}{UA_p} \right]_{\max} (UA_t - UA_{BLt})$$

23

Theory - UAI

$$UAI_t = CDF_p \left[\frac{FV_{UAp}}{UA_p} \right]_{\max} (UA_t - UA_{BLt})$$

$$UA_t = \frac{\text{All unavailable hours during the previous 12 quarters while critical}}{\text{Critical hours during the previous 12 quarters}}$$

UA_{BLt} is the sum of two elements: plant specific actual **planned** unavailability (1999-2001) and industry mean **unplanned** unavailability (Appendix F-Table 1).

24

Theory - UAI

Baseline Planned Unavailable Hours Calculation:

1. Record the total train unavailable hours reported under the Reactor Oversight Process for 1999 through 2001.
2. Subtract any fault exposure hours still included in the 1999-2001 period.
3. Subtract unplanned unavailable hours
4. Add any on-line overhaul hours excluded in accordance with NEI 99-02.

25

Theory - UAI

Baseline Planned Unavailable Hours Calculation:

5. Subtract any unavailable hours reported when the reactor was not critical.
6. Subtract hours cascaded onto monitored systems by support systems.
7. Divide the hours derived from steps 1-6 above by the total critical hours during 1999-2001. This is the baseline planned unavailability

26

Calculation - UAI

Planned Unavailable Hours (1999 - 2001)

Critical Hours

Appendix F - Table 1

Calculate Baseline UA value for each train

Critical Hours 24362

Train	Hours	UA_{BL} PL	UA_{BL} UP	UA_{BLt}
A	24.69	1.01E-03	9.10E-04	1.92E-03
B	3.68	1.51E-04	6.90E-04	8.41E-04
N	28.06	1.15E-03	6.90E-04	1.84E-03

27

Calculation - UAI

$$UA_t = \frac{\text{All unavailable hours during the previous 12 quarters while critical}}{\text{Critical hours during the previous 12 quarters}}$$

Calculate actual UA for each train

Critical Hours 24414

Train	Hours	UA_t
A	17.25	7.08E-04
B	0.87	3.57E-05
N	24.28	9.97E-04

28

Calculation - UAI

$$UAI = \sum_{t=1}^{n} UAI_t$$

$$UAI_t = CDF_p \left[\frac{FV_{UAp}}{UA_p} \right]_{\max} (UA_t - UA_{BLt})$$

Calculate URI for each component and sum them

CDF_P= 1.75E-05

Train	FV/UA_P	UA_t	UA_{BLt}	$CDF*FV/UA(UA_t-UA_{BLt})$
A	7.24E+00	7.08E-04	1.92E-03	-1.54E-07
B	6.36E+01	3.57E-05	8.41E-04	-8.96E-07
N	8.83E+00	9.97E-04	1.84E-03	-1.31E-07
UAI				**-1.18E-06**

29

Calculation - MSPI

End with:

MSPI = UAI + URI

MSPI = (-1.18E-06) + (-2.04E-06)

MSPI = -3.22E-06

30

Theory

When is a performance indicator not an indicator of performance?

31

Theory - Indicator Validity

If, for any failure mode for any component in a system, the risk increase (ΔMSPI) associated with the change in unreliability and unavailability resulting from single failure is larger than 1.0×10^{-6}, then the performance index will be considered invalid for that system. (See Appendix F)

32

Theory - Indicator Validity

For demand failures (See basis document):

$$\Delta MSPI = CDF_p \times \sum_{N\ similar\ comp} \left\{ \frac{FV_{URc}}{UR_{pc}} \times \frac{1}{a+b+D} \right\}$$

$$+ CDF_p \times \frac{FV_{UAp}}{UA_p} \times \frac{T_{Mean\,\mathrm{Repair}}}{T_{CR}}$$

33

Theory - Indicator Validity

For run failures (see basis document):

$$\Delta MSPI = CDF_p \times \sum_{N\ similar\ comp} \left\{ \frac{FV_{URc}}{UR_{pc}} \times \frac{T_m}{b+T_r} \right\}$$

$$+ CDF_p \times \frac{FV_{UAp}}{UA_p} \times \frac{T_{\mathrm{MeanRepair}}}{T_{CR}}$$

34

Calculation - Indicator Validity

AFN-P01 demand failure (MDP)

$$\Delta MSPI = (1.75E-5)\times\frac{1}{0.5+240+54}(8.83+63.6)$$
$$+(1.75E-5)\times 8.83\times\frac{36}{24362}$$

$$\Delta MSPI = 4.53E-6$$

35

THE END

36

Overview of MSPI Guideline and Appendix F

Stephen D. Floyd
Senior Director, Regulatory Reform
July 23, 2002

NEI

Appendix F

- System Unavailability Index (UAI)
  - Equation 2

$$UAI_t = CDF_p \left[\frac{FV_{UAp}}{UA_p} \right]_{\max} (UA_t - UA_{BLt})$$

  - Historical values
    - Planned unavailability
    - Unplanned unavailability

NEI

Appendix F

- System Unreliability Index (URI)
  - Equation 3

$$URI = CDF_p \sum_{j=1}^{m} \left[\frac{FV_{URc}}{UR_{pc}} \right]_{\max} (UR_{Bc} - UR_{BLc})$$

  - Equation 4

$$UR_{Bc} = P_D + \lambda T_m$$

NEI

3

Appendix F

- System Unreliability Index (URI)
  - Equation 5

$$P_D = \frac{(N_d + a)}{(a + b + D)}$$

  - Equation 6

$$\lambda = \frac{(N_r + a)}{(T_r + b)}$$

NEI

4

Appendix F

- Fussell-Vesely values discussion
- When is the PI Invalid?
- Definitions
- Clarifying Notes
  - Train boundaries
  - Active components
  - Non-active components
  - Baseline values

NEI

Appendix F

- Table 1 – Historical Unplanned Unavailability
- Table 2 – Industry Prior Values for unreliability
- Table 3 – Component Boundary Definitions
- Illustrative Figures

NEI

Guideline Section 2.2

- Purpose
- Indicator Definition
- Monitored Systems
- Data Reporting Elements
- Index Calculation
- Definition of Terms

NEI

Guideline Section 2.2

- Clarifying Notes
  - Documentation
  - Success Criteria
  - Monitored/Diverse Systems
  - Common Components
  - Short Duration Unavailability
  - Degraded conditions
  - Failures on Demand

NEI

Guideline Section 2.2

- Clarifying Notes
  - Discovered Conditions
    - Capable of being detected by normal surveillances
    - NOT capable of being detected by normal surveillances
  - Credit for Operator Recovery Actions
    - During testing or alignments
    - During maintenance

NEI

Guideline Section 2.2

- Clarifying Notes
  - Swing trains and shared components
  - Maintenance trains and installed spares
  - Use of Plant-Specific PRA and SPAR models
  - Maintenance Rule Performance Monitoring
- Additional Guidance for Specific Systems

NEI

FINAL DRAFT SUCCESS CRITERIA - MSPI PILOT
MSPI Planning Committee Meeting
June 13, 2002

Statement of Purpose

Upon successful completion of the following success criteria, with a determination that the MSPI pilot is a valid and appropriate means of measuring risk for the monitored systems, then the MSPI will suffice as the measure of assessment and not the significance determination process for single failures of the active components within the scope of the MSPI. There will be no significant technical problems that can't be resolved before full MSPI implementation.

MSPI Pilot Goals

Overall assessment of the MSPI will satisfy the ROP objective of:

a) Maintain Safety: MSPI capable of discerning significant departures from expected performance that warrant additional attention.
b) Enhancing Public Confidence: MSPI is at least as understandable as the current indicator.
c) Improving the Efficiency and Effectiveness of NRC Processes: Less NRC time is spent on single demand failure SDPs and fault exposure data issues.
d) Reducing Unnecessary Regulatory Burden: The overall resources needed to satisfy the new indicator are less than the old indicator considering for example, the balance of additional reporting elements with the elimination of duplicate records for MR, PRA, and RP data, and less time on single demand failure SDP evaluation.

1) The MSPI success criteria listed herein will be determined to have been met if there is general agreement among the staff and industry stakeholders that the success criteria have been met and the significant technical issues have been resolved.

2) The occurrence of a single failure of a MSPI monitored component by itself, absent any other failures or unavailabilities, should rarely exceed the green/white MSPI threshold as measured from the baseline value. The term, "rare" is defined as minimizing the inconsistencies across plants, within plants, and within systems such that there is no undue burden on resources, and the objective of having consistent publically displayed results can be achieved.

3) False positive/false negative rates can be established for the chosen statical method and instances where the MSPI can not meet the criteria are rare.

4) Instances where the results from the MSPI calculational methodology are not consistent with the SPAR-3 models are rare.

5) The MSPI pilot plant participants can: (1) identify and compile the risk significant functions for the monitored systems in a readily inspectable format, and (2) compile a set of predetermined success criteria for the risk significant functions.

6) The active components in the monitored system are appropriate for inclusion in the MSPI and are a manageable number of components under the MSPI.

7) By the end of the pilot, MSPI data can be accurately reported and quality checked.

8) By the end of the pilot, inspection procedure and MSPI pilot guidelines are sufficiently detailed to minimize FAQs and NRC feedback forms.

9) FAQs and NRC feedback forms do not reveal any non-resolvable issue(s).

10) Data collection inconsistencies between the maintenance rule and the MSPI can be reconciled in order to eliminate or significantly reduce separate reporting.

11) Plant-specific results generated by the MSPI compares favorably with MSPI results using NRC SPAR model inputs, or the differences can be resolved.

12) Validation of the linear approximation model calculated by the MSPI are comparable with the results generated by licensee PRAs and SPAR models.

Pre-Full Implementation Issues

1) If the Success Criteria 2 through 4 are met, (i.e., the identified instances are rare), then the ROP should be revised to provide a decision process and a rational basis that justifies use of the MSPI results in lieu of the SDP. The basis should include addressing the inconsistency between the SPAR-3 model or licensee plant-specific PRA, and the calculational methodology used by the MSPI and why it is adequate to use the MSPI result.

2) The MSPI and inspection program guidance should be evaluated for consistency and coherence.

NRC REGULATORY ISSUE SUMMARY 2002-XX
CHANGES TO THE SAFETY SYSTEM UNAVAILABILITY PERFORMANCE INDICATORS

ADDRESSEES

All holders of operating licenses for nuclear power reactors, except those who have permanently ceased operations and have certified that fuel has been permanently removed from the reactor vessel.

INTENT

The U.S. Nuclear Regulatory Commission (NRC) is issuing this Regulatory Issue Summary (RIS) to inform power reactor licensees that a 6-month pilot test beginning September 1, 2002, will be conducted to evaluate changes to the "safety systems unavailability" performance indicator (PI). The pilot-test will be assessed at the mid-way point to determine if more data is needed to obtain meaningful results; thus, the pilot-test could potentially be extended if deemed necessary. Although the pilot formally begins September 1, 2002, the staff and the industry have already begun table top exercises and reviews in an effort to identify potential problems with the proposed approach for the pilot program. This RIS also provides information on the process to be used by licensees participating in the pilot test to voluntarily submit PI data to the NRC beginning November 22, 2002. Submittal of PI information is a voluntary activity; therefore, this RIS requires no action or written response on the part of the addressees.

BACKGROUND INFORMATION

The Reactor Oversight Process (ROP) is built upon a framework directly linked to the Agency's mission. That framework includes cornerstones of safety. Within each cornerstone, a broad sample of information on which to assess licensee performance in risk-significant areas is gathered from PI data submitted by the licensees and from the NRC's risk-informed baseline inspections. The PIs are not intended to provide complete coverage of every aspect of plant design and operation, but they are intended to be indicative of performance within related cornerstones. The data submitted by each licensee is used to calculate the PI values, which are then compared to risk-informed, objective thresholds.

NRC has established a formal process to (1) address questions and feedback from internal and external stakeholders, (2) make changes to existing PIs and thresholds based on lessons learned, and (3) develop new PIs and associated thresholds. This formal process is being used to evaluate the changes described in this RIS, and is documented in Inspection Manual Chapter 0608, "Performance Indicator Program."

SUMMARY OF ISSUE

Results of the ROP Pilot Program (SECY-00-0049, dated February 24, 2000) gave first indications that there were problems with the safety system unavailability indicators. NRC also received further stakeholder feedback from public workshops, NRC/Industry Working Group

meetings, and the ROP feedback process. The major issues to address as identified by the Safety System Unavailability (SSU) Planning Committee include: (1) use of risk significant functions versus design-basis functions, (2) the use of T/2 fault exposure time in the current safety system unavailability PI, (3) evaluation of design deficiencies and other performance deficiencies that are not detected through regular surveillance tests, but through the significant determination process (SDP), and (4) the manner that support systems (i.e., component cooling water and service water) unavailability should affect the availability of the monitored SSU system.

In accordance with the formal process, measures have been taken to modify the existing SSU PI. Numerous public meetings (monthly) have been conducted since February 22, 2001, to discuss and develop alternate SSU PIs. As a result, NRC has agreed to pilot test a set of performance indicators under the mitigating systems cornerstone. These PIs will be referred to as the Mitigating System Performance Index (MSPI). The purpose of the MSPI is to monitor the risk impact of changes in the performance of the selected systems. This index is comprised of system unavailability and system unreliability elements for the monitored system.

The following plants have volunteered to participate in the pilot test: Salem, Units 1&2; Hope Creek; Limerick, Units 1&2; Millstone Units 2&3; Prairie Island, Units 1&2; Braidwood Units 1&2; Surry, Units 1&2; Palo Verde, Units 1,2,&3; San Onofre, Units 2&3; and South Texas, Units 1&2.

The purpose of this pilot program is to collect data to determine if the alternative MSPI is a significant improvement in comparison to the existing SSU PIs for providing an indication of performance in mitigating systems cornerstone, without introducing new unintended consequences.

In reaching its determination regarding the efficacy of the proposed MSPI, the NRC will consider its standard practice in pilot-tests as follows:

1. difference between data collected for the current safety system unavailability PIs and the pilot tested MSPI;

2. comparability of the data reported for the "safety system unavailability" and the MSPI;

3. the ability of licensees to report the requested data accurately and with minimal need for clarification;

4. the ability of the alternate MSPI to reduce the potential for additional unintended consequences without introducing other unintended consequences;

5. whether the MSPI will satisfy the ROP objectives:

   <u>maintain safety</u>: MSPI capable of discerning significant departures from expected performance that warrant additional attention

   <u>enhance public confidence</u>: MSPI is at least as understandable as the current SSU PI

improve the efficiency and effectiveness of NRC processes: less NRC resources are spent on single demand failure SDPs and fault exposure data issues

reduce unnecessary regulatory burden: whether there is reduction in reporting burden (ie, duplicity in records for maintenance rule, PRA, and RP, and resources allocated to single demand failure SDP evaluations) for licensees

Attachment 3 of this RIS is the objectives of the MSPI and Attachment 4 is additional specific success criteria which address the technical adequacy of the MSPI.

During the pilot, the pilot plants will continue to be assessed using the existing PIs and not the proposed alternate MSPI.

The NRC will make a determination mid-way through the pilot-test if the time allotment of 6-months should be extended in a effort to collect sufficient data to ensure that the results are meaningful and adequate to gather insights.

Based on the results of this pilot program, including consideration of stakeholder feedback, the NRC will decide whether to replace the current PIs with the alternate MSPI.

VOLUNTARY ACTION

Addressees that are participating in this pilot program should conform to the guidance contained in the RIS for the voluntary submission of PI data. Send the PI data as an attachment to an e-mail message addressed to <pidata@nrc.gov> on or before November 21, 2002, to include data for September and August 2002, and by the 21st of the month following the end of each month thereafter. Include in the subject of the e-mail, "MSPI Pilot-Test Data." The data reporting phase of the pilot test ends on March 21, 2003, with the submission of data from the preceding month.

Questions and comments from industry should be forwarded to tch@nei.org. All other feeback from the NRC staff and the public should be forwarded to reactoroversight@nrc.gov. Questions submitted to these e-mail addresses will be discussed and evaluated during the MSPI Working Group monthly meetings. Thus, a response should be expected within 2-weeks following the regularly scheduled MSPI Working Group meeting.

BACKFIT DISCUSSION

This RIS requires no action or written response. Any action on the part of addressees to collect and transmit PI data in accordance with the guidance contained in this RIS is strictly voluntary and, therefore, is not a backfit under 10 CFR 50.109. Therefore, the staff did not perform a backfit analysis.

FEDERAL REGISTER NOTIFICATION

A notice of opportunity for public comment on this RIS was not published in the Federal Register because the NRC has worked closely with NEI, industry representatives, member of the public, and other stakeholders since early 1998 on the development of NRC's ROP, including the collection of PI data. The NRC has solicited public comments on its intent to collect PI data in five Federal Register notices (dated January 22, April 12, May 26, July 19, and

August 11, 1999), three Regulatory Issue Summaries: RIS 99-06, 00-08, 01-XX, "Voluntary Submission of Performance Indicator Data," RIS 00-21, "Changes to the Unplanned Scram and Unplanned Scram with Loss of Normal Heat Removal Performance Indicators," and at numerous public meetings. The NRC will also issue a Federal Register notice soliciting public comment on the proposed PIs that are described in this RIS.

PAPERWORK REDUCTION ACT STATEMENT

This RIS contains a voluntary information collection that is subject to the Paperwork Reduction Act of 1995 (44 U.S.C. 3501 et seq.). The NRC may not conduct or sponsor, and a person is not required to respond to, a collection of information unless it displays a currently valid Office of Management and Budget (OMB) control number. The collection of this information is cover by OMB clearance number 3150-0195 which expires on October 31, 2002.

Please contact the person listed below with any questions about this matter.

David B. Matthews, Director
Division of Regulatory Improvement Programs
Office of Nuclear Reactor Regulation

Technical Contact: Serita Sanders, NRR
301-415-2956
E-mail: SXS5@nrc.gov

Attachments:
1. NEI 99-02, "Regulatory Assessment Performance Indicator Guideline," Section 2.2, Mitigating Systems Cornerstone (Draft)
2. NEI 99-02, Appendix F, " Methodology For Computing The Unavailability Index, The Unreliability Index and Determining Performance Index Validity" (Draft)
3. MSPI Pilot Program Objectives (Draft)
4. MSPI Pilot Program Success Criteria (Draft)

MSPI Objectives

1. To exercise the full calculational methodology to determine the ability of licensees to report the MSPI data accurately and with minimal need for clarification.

2. To compare calculated MSPI values to those obtained from the SPAR Rev 3 models and to the current SSU PI data reported to the ROP to ascertain whether the MSPI provides an acceptable indication of system performance and resolves the concerns with the SSU.

3. To identify the number of situations in which a single failure alone results in an MSPI crossing the green/white MSPI threshold.

4. To define acceptable false positive and false negative rates.

5. To evaluate the appropriateness of the plant-specific baseline values used in the MSPI.

6. To evaluate data collection inconsistencies between the MSPI, the Maintenance Rule, and PRA applications.

7. To evaluate the potential for the MSPI to produce unintended consequences.

8. To validate the baseline unavailability and unreliability values used in the MSPI.

MSPI Success Criteria

The MSPI success criteria listed below will be determined to have been met if there is general agreement among the staff, industry stakeholders, and public stakeholders that they have been met.

1. The occurrence of a single failure of an MSPI monitored component by itself, absent any other failures or unavailabilities, should rarely exceed the green/white MSPI threshold as measured from the baseline value. The term "rare" is defined as minimizing the inconsistencies across plants, within plants, and within systems such that there is no undue burden on resources, and the objective of having consistent publicly displayed results can be achieved.

2. False positive and false negative rates can be established for the chosen statical method, and instances where the MSPI cannot meet the criteria are rare.

3. Instances where the results from the MSPI calculational methodology are not consistent with the SPAR-3 models are rare, and the differences are explainable.

4. The MSPI pilot plant participants can identify and compile the risk significant functions for the monitored systems in a readily inspectable format, and can compile a set of predetermined success criteria for those risk significant functions.

5. The active components in the monitored systems are appropriate for inclusion in the MSPI and are a manageable number of components under the MSPI.

6. By the end of the pilot, MSPI data can be accurately reported and quality checked.

7. By the end of the pilot, inspection procedures and MSPI pilot guidelines are sufficiently detailed to minimize FAQs and NRC feedback forms.

8. MSPI FAQs and NRC feedback do not reveal any unresolvable issues.

9. Data collection inconsistencies between the maintenance rule and the MSPI can be reconciled in order to eliminate or significantly reduce separate reporting.

10. Differences between the linear approximation models generated by licensee PRAs and those generated by the NRC SPAR models can be reconciled.

11. The MSPI produces no new unintended consequences that cannot be resolved.

DRAFT

NRC INSPECTION MANUAL

IIPB

TEMPORARY INSTRUCTION 2515/XXX

MITIGATING SYSTEMS PERFORMANCE INDEX PILOT VERIFICATION

CORNERSTONE: MITIGATING SYSTEMS

APPLICABILITY: This temporary instruction (TI) applies to all holders of operating licenses for light water nuclear power reactors participating in the Mitigating Systems Performance Index (MSPI) pilot program as described in Appendix A to this TI.

2515/xxx-01 OBJECTIVE

The objective of this TI is to verify that participating licensees have correctly implemented the MSPI pilot guidance (see Appendix B) for reporting unavailability and unreliability of the monitored safety systems. This information gathering will help the NRC staff decide whether to adopt the MSPI.

2515/xxx-02 BACKGROUND

02.01 Purpose of the MSPI

The MSPI was developed to replace the Safety System Unavailability (SSU) indicators currently in use in the ROP. It was designed to resolve many of the weaknesses in the SSU, including the following: (1) the use design basis functions rather than risk-significant functions; (2) the use of thresholds developed from generic plant models rather than from plant-specific models; (3) the use of fault exposure unavailable hours as a surrogate for unreliability rather than monitoring unreliability directly, and (4) the cascading of support system unavailabilities to the monitored systems rather than monitoring support systems separately. The MSPI monitors the unavailability and the unreliability of the same four safety systems that comprise the SSU; it also monitors the cooling water support systems for those safety systems.

02.02 Objectives of the Pilot Program

1. To satisfy the NRC's performance goals:
   (a) Maintain Safety - the MSPI should be capable of discerning significant departures from expected performance that warrant additional attention.
   (b) Enhance Public Confidence - the MSPI should be at least as understandable as the current SSU indicators.

(c) Improve the Efficiency and Effectiveness of NRC Activities and Processes - less NRC time is spent resolving MSPI issues (i.e., SDPs, FAQs, feedback forms, baseline inspections, etc.) than would have been spent on SSU issues.
(d) Reduce Unnecessary Regulatory Burden on Stakeholders - overall licensee resources applied to the ROP, Maintenance Rule, and PRA applications are less than the resources currently applied to those applications.

2. To exercise the full calculational methodology to determine the ability of licensees to report the MSPI data accurately and with minimal need for clarification.

3. To compare calculated MSPI values to those obtained from the SPAR Rev 3 models and to the current SSU PI data reported to the ROP to ascertain whether the MSPI provides an acceptable indication of system performance and resolves the concerns with the SSU.

4. To identify the number of situations in which a single failure alone results in an MSPI crossing the green/white MSPI threshold.

5. To define acceptable false positive and false negative rates.

6. To evaluate the appropriateness of the plant-specific baseline values used in the MSPI.

7. To evaluate data collection inconsistencies between the MSPI, the Maintenance Rule, and PRA applications.

8. To evaluate the potential for the MSPI to produce unintended consequences.

9. To validate the baseline unavailability and unreliability values used in the MSPI.

02.03 MSPI Pilot Success Criteria

The MSPI success criteria listed below will be determined to have been met if there is general agreement among the staff, industry stakeholders, and public stakeholders that they have been met.

1. The occurrence of a single failure of an MSPI monitored component by itself, absent any other failures or unavailabilities, should rarely exceed the green/white MSPI threshold as measured from the baseline value. The term "rare" is defined as minimizing the inconsistencies across plants, within plants, and within systems such that there is no undue burden on resources, and the objective of having consistent publicly displayed results can be achieved.

2. False positive and false negative rates can be established for the chosen statical method, and instances where the MSPI cannot meet the criteria are rare.

3. Instances where the results from the MSPI calculational methodology are not consistent with the SPAR-3 models are rare, and the differences are explainable.

4. The MSPI pilot plant participants can identify and compile the risk significant functions for the monitored systems in a readily inspectable format, and can compile a set of predetermined success criteria for those risk significant functions.

5. The active components in the monitored systems are appropriate for inclusion in the MSPI and are a manageable number of components under the MSPI.

6. By the end of the pilot, MSPI data can be accurately reported and quality checked.

7. By the end of the pilot, inspection procedures and MSPI pilot guidelines are sufficiently detailed to minimize MSPI FAQs and NRC feedback.

8. MSPI FAQs and NRC feedback do not reveal any unresolvable issues.

9. Data collection inconsistencies between the maintenance rule and the MSPI can be reconciled in order to eliminate or significantly reduce separate reporting.

10. Differences between the linear approximation models generated by licensee PRAs and those generated by the NRC SPAR models can be reconciled.

11. The MSPI produces no new unintended consequences that cannot be resolved.

The pilot program consists of six months of data collection and reporting by the pilot plants, concurrent with about six months of table top exercises. Upon completion of these efforts, the staff will evaluate the results against the success criteria over the next four to six months. If the staff determines that the pilot program has been successful, the MSPI will be incorporated into the ROP PI program. The MSPI will then provide the measure of risk associated with any event or condition caused by a single failure or unavailability of a single system. The color assigned to such events or conditions will be determined by the MSPI and no SDP analysis will be performed on that event or condition. For more complicated events, however, involving more than one failure or unavailability of more than more than one system, the SDP will be used to provide the risk color of the event.

The NRC has developed a Web page to keep the public informed of pilot MSPI program activities. This web-page (*http://www.nrc.gov/NRC/REACTOR/XXX/index.html*) provides links to information regarding the MSPI pilot, along with documentation of the NRC's interactions with the industry (industry submittals, meeting notices, presentation materials, and meeting summaries). The NRC will continue to update this Web page as new information becomes available.

2515/xxx-03 INSPECTION REQUIREMENTS

Licensee participation in this pilot MSPI program is voluntary. However, participating licensees have agreed to follow the guidance and reporting format herein to ensure consistency in reporting and to aid in validation of the pilot results. The following subsections provide direction and information basic to the guidance and format of the MSPI.

03.01 General

The information provided on the NRC's Internal Web site (http://nrr40.nrc.gov/XXX/index.html) will give inspectors a basic understanding of the MSPI. This Web site does not stipulate additional inspection requirements beyond those identified in this TI. Additional guidance can be found in Appendixes A and B to this TI.

03.02 Plants Participating in the Pilot MSPI

Region I	Region II	Region III	Region IV
Limerick 1,2	Surry 1,2	Braidwood 1,2	Palo Verde 1,2,3
Millstone 2,3		Prairie Island 1,2	San Onofre 2,2
Hope Creek			South Texas 1,2
Salem 1,2			

03.03 List of Systems for the MSPI Pilot

The following is the list of systems within the scope of the MSPI pilot:

BWRs: HPCI/HPCS/FWCI
RCIC
RHR
EDGs (Emergency AC Power)
ESW (Essential Service Water or equivalent)
RBCCW (Reactor Building Closed Cooling Water or equivalent)
TBCCW (Turbine Building Closed Cooling Water or equivalent)

PWRs: HPSI
AFW
RHR
EDGs (Emergency AC Power)
ESW (Essential Service Water or equivalent)
CCW (Component Cooling Water or equivalent)

03.04 MSPI Data Collection Guidance

The MSPI pilot will require participating licensees to effectively capture the most recent three years of data prior to the start of the pilot program to ensure sufficient data for MSPI calculational purposes. This data can be captured by using six months of actual data with the additional data captured through best-estimate means.

Baseline Values

The baseline values for unreliability are fixed values and are located in Table 2 of Appendix F of the MSPI guidance document. They were derived from various staff technical studies published in NUREGs 4550 and 5500 (and their various appendices) between 1990 and 1999.

The baseline values for unavailability have two sets of data. The plant-specific unplanned unavailability values are fixed values from 1999-2001 and are contained in Table 1 of Appendix F. The planned unavailability values are based on actual plant-specific values using actual ROP data from 1999-2001. These values are expected to remain fixed unless the licensee changes their maintenance philosophy with respect to on-line maintenance or preventive maintenance. Both sets of values are based on ROP PI industry data from 1999 through 2001.

03.05 Data Accuracy and Quality

Licensees are exempt from the requirements of 10 CFR 50.9 for purposes of this voluntary MSPI pilot program. Additionally, all licensees will continue to report the existing SSU indicators in accordance with the guidance contained in NEI 99-02, Revision 2. Guidance on the expected level of quality and accuracy of the pilot data is contained in Attachment A (RIS).

2515/xxx-04 GUIDANCE

04.01 General

a. Questions raised during the pilot by the licensees or other stakeholders will be addressed through the MSPI Working Group. The MSPI Working Group will plan to hold public meetings monthly to handle any questions or concerns resulting from the MSPI pilot program.

b. For purposes of this pilot, old or existing SSU FAQs would be applicable during the pilot unless they conflict with specific MSPI pilot guidance.

c. Inspectors may submit questions concerning the pilot program via email addressed to reactoroversight@nrc.gov).

04.02 MSPI Implementation and Reporting Guidance

a. Prior to the pilot, licensee pilot participants developed a plant-specific list of their Maintenance Rule high safety-significant functions (or risk-significant functions) and success criteria for the monitored systems. Inspectors should confirm that this information is available for review/inspection by the end of the first month's reporting period of October 22, 2002.

b. Confirm that the licensee is using definitions for unavailability, unreliability, risk-significant functions, success criteria, train, and the Fussell-Vesely (F-V) coefficient that are consistent with the definitions in the MSPI guidance document in Attachment B of this TI.

c. Inspectors should audit two of the monitored systems.
   1. Confirm that the licensee is applying the definitions from b above properly in its calculations.
   2. Verify that the at-power risk-significant functions are correct by comparing the licensee's list of risk-significant functions to their Maintenance Rule list of high safety-significant functions (typically contained in document called a Basis Document). Where differences exist, licensees should be asked to reconcile those differences.
   3. Verify that the system boundaries and the monitored components are consistent with the licensee's PRA model. For unreliability, the system boundaries should include all

active components that could fail any train. For unavailability, the system boundaries should include all components that could fail any train.

4. Verify that the success criteria are consistent with the licensee's PRA model.
5. Confirm that each monitored component has an associated unreliability F-V coefficient derived from the licensee's PRA. Confirm that each monitored train has an associated unavailability F-V coefficient derived from the licensee's PRA. For the purposes of this pilot, the unavailability and unreliability F-V coefficients are constants and not subject to change unless the licensees provides a rationale and basis for the change prior to doing so. Any change in the F-V coefficients constants should be noted in the inspection report.

d. Inspectors should confirm that licensees follow the guidance contained in Attachment B of this TI. As a minimum, inspectors should:

1. Confirm that valid demands and valid failures on demand for monitored at-power functions that occur while the reactor is shutdown are counted if the failure would prevent the system from performing that function at power.

2. Confirm that the MSPI algorithms that calculate the PI values are implemented in accordance with the guidance contained in Appendix B of this TI.

e. Any significant inconsistencies identified as a result of a through d above should be documented in accordance with IP 71151, Performance Indicator Verification and sent to Serita Sanders at sxs5@nrc.gov, or by telephone at (301) 415-2956. Also notify Regional and NRR management (the Projects Branch Chief and the NRR/DIPM/IIPB Assessment Section Chief, mas@nrc.gov).

2515/xxx-06 COMPLETION SCHEDULE

This TI should be completed by the end of the pilot data reporting period, on or before February 28, 2003.

2515/xxx-07 EXPIRATION

This TI will expire two years from the date of issuance. Before that date, this TI should be performed once at each licensee facility, where applicable.

2515/xxx-08 CONTACT

For questions regarding the performance of this TI and emergent issues, contact Serita Sanders at (301) 415-2956 or sxs5@nrc.gov).

2515/xxx-09 STATISTICAL DATA REPORTING

All direct inspection effort expended in connection with this TI is to be charged as baseline inspection hours assigned to IP 71151, "PI Verification."

2515/xxx-10 ORIGINATING ORGANIZATION INFORMATION

10.01 Organizational Responsibility

This TI was initiated by NRR/DIPM/IIPB.

10.02 Resource Estimate

The direct inspection effort to be expended in connection with this TI is estimated to be as follows:

Unavailability portion of the PI: 15 man-hours/unit inspection.

Unreliability portion of the PI: 15 man-hours/unit inspection.

10.03 Training

It is expected that inspectors of sites who are participants in this pilot PI program will have attended the July 23-25, 2002 public MSPI workshop. No additional formal training is proposed for the performance of this TI. Web-based information will be provided to inspectors via the NRC internal Web site (http://nrr40.nrc.gov/XXXX/index.html) for their insight and also for their preparation for this inspection.

END

Appendix A: Regulatory Information Summary on Guidance for the Mitigating Systems Performance Index Pilot

Appendix B: Guidance on Implementation of the Mitigating Systems Performance Index Pilot Program (Section 2.2 and Appendix f)

DRAFT

Appendix A

Regulatory Information Summary on Guidance for the Mitigating Systems Performance Index Program

DRAFT

Appendix B

Section 2.2 and Appendix F Guidance on Implementation of the Mitigating Systems Performance Index Pilot Program

MITIGATING SYSTEMS PERFORMANCE INDICATOR PILOT PROGRAM
TIME LINE OF PLANNED ACTIVITIES

MONTH OF JULY, 2002

July (all month)	Table top evaluations ongoing by RES	Hossein Hamzehee, RES
July 2/3	MSPI Public Meeting (OWFN 7B4)	John Thompson/NEI/industry
July 22	1/2 day staff Pre-meet, MSPI Workshop, Chicago, Ill	Internal Stakeholders
July 23-25	MSPI Public Workshop, Intercontinental Hotel, Chicago, Ill	John Thompson/NEI/industry

MONTH OF AUGUST, 2002

August 1	Start of MSPI, continuation of Table Top Evaluations	Industry, Staff Hossein Hamzehee, RES
August 21	ROP meeting	John Thompson/NEI/industry
August 22	MSPI meeting (room TBD)	John Thompson/Industry

MONTH OF SEPTEMBER, 2002

September 1	Start of MSPI data collection	Pilot Plant Participants

MONTH OF NOVEMBER, 2002

November	Brief ACRS subcommittee on pilot progress	NRR/RES

MONTH OF FEBRUARY, 2003

February 28	End of data collection period. Start of data analysis	NRR/RES

MONTH OF MARCH, 2003

March	Brief ACRS Subcommittee on pilot progress	NRR/RES

MONTH OF JULY, 2003

July	End of Pilot. RIS to communicate pilot results to public	N/A

Conduct of the Pilot Program

Thomas C. Houghton
Senior Project Manager, ROP
July 23, 2002

NEI

Information Exchange

- Data Reporting
  - Monthly via email
  - Generic Spreadsheet
- Meetings and Conference Calls
  - Monthly with NRC and Pilots
  - Pilots will conference call monthly in between meetings with NRC

NEI

Frequently Asked Questions

- Licensee Questions via email to tch@nei.org
- Discussed at Monthly NRC/Pilot Meetings
  - Looking for quick turn-around
  - Opportunity for all stakeholders to participate

NEI

NRC Feedback

Serita Sanders
Office Of Nuclear Reactor Regulation
July 23, 2002

Pilot Test Feedback & Reporting

- Send All Questions and Comments to:
  - reactoroversight@nrc.gov
  - include "MSPI Question" in subject line
- Send Pilot Test data to:
  - pidata@nrc.gov
  - include "MSPI Pilot Data" in subject line