FRAMATOME ANP

Fuel Qualification Plan

Prepared for:
U.S. Department of Energy
Office of Material Disposition

On Behalf of:

DUKE COGEMA
STONE & WEBSTER

Under Contract Number:
DE-AC02-99CH10888

DCS Document Number: DCS-FQ-1999-001, Rev 2
FRA-ANP (US) Document Number: 77-5005775-02

April 2001

This Page
Intentionally Left Blank

Acknowledgement Page

Prepared by: Laurence L. Losh Date: 2 April 2001

Laurence L. Losh
Framatome ANP, Inc.

Reviewed by: George A. Meyer Date: 2 April 2001

George A. Meyer
Fuel Qualification Manager
Duke COGEMA Stone & Webster

Concurrence: Richard H. Clark Date: 2/4/01

Richard H. Clark
Irradiation Services Manager
Duke COGEMA Stone & Webster

Approval: L. Newman for Date: 2 April 2001

Ronnie L. Gardner
Vice-President
Framatome ANP, Inc.

This Page
Intentionally Left Blank

SUMMARY

The U.S. Department of Energy (DOE) has contracted with Duke COGEMA Stone & Webster (DCS) to qualify mixed oxide (MOX) fuel for disposition of surplus weapons-grade (WG) plutonium.

The overall strategy for this fuel qualification effort is based on the application of extensive European experience to a proven fuel assembly design and confirmed with a lead assembly irradiation with prototypical fuel in one of the mission reactors. Fabrication uses the COGEMA/BELGONUCLEAIRE developed MIcronized MASter blend (MIMAS) process currently supplying MOX fuel to 32 reactors in Europe. The manufacturing process will utilize aqueous polishing to remove impurities, most notably gallium, to ensure that the MOX fuel produced for the Materials Disposition (MD) program is consistent with the European data base.

This Fuel Qualification Plan has been prepared to outline the step-by-step process to be followed for implementing this strategy. Through these steps, the Fuel Qualification Plan addresses the issues associated with implementation of MOX fuel at the mission reactors and defines the technical approach to resolving those issues.

The process for qualifying the MOX fuel for mission reactor implementation consists of the following steps:

1. Development of the MOX Fuel Pellet Specification

   Based on the Framatome ANP, SSA [FRA-ANP (Fr)] MOX European experience and the Framatome ANP, Inc. [FRA-ANP (US)] UO_2 experience, a MOX pellet specification will be prepared addressing the issues associated with weapons grade plutonium versus reactor grade plutonium, i.e. isotopics and impurities (gallium). The MOX pellet specification will impose impurity limits on the feed plutonium powder following polishing to ensure that the MOX pellets contain only trace levels of gallium, comparable to gallium levels in current UO_2 fuel.

2. Analysis of Mark-BW Fuel Assembly with MOX Pellets

   The MOX pellet specification will be used to design a fuel rod for the Mark-BW/MOX1 fuel assembly, FRA-ANP (US)'s adaptation of the proven Advanced Mark-BW fuel design for MOX applications. Only the fuel rod design will change to accommodate the WG MOX; all other external (to the fuel rod) dimensions, materials, and specifications will remain the same as the UO_2 version of the Advanced Mark-BW. Use of the Mark-BW/MOX1 design ensures that the qualification effort can focus on the MOX application only. A complete Technical File for the Mark-BW/MOX1 will be prepared reflecting the fuel rod design change. This information will be provided to Duke Power and

the fabrication facilities as a Design Interface Document. Analyses of the Mark-BW/MOX1 will be performed to confirm performance.

3. Core Performance and Safety Evaluations

Having confirmed the fuel assembly performance with MOX pellets, the qualification process will next evaluate the mission reactor core performance operating with the Mark-BW/MOX1 assembly. The core evaluations will be performed by Duke Power, supported by the extensive European experimental database and operating experience. The plutonium disposition objective will be accomplished with a maximum fuel rod burnup of 50,000 MWd/MThm. This burnup limit was selected to allow efficient disposition of the plutonium while staying well within the European experience. NRC approval will also be aided by a schedule that focuses on early submittal of licensing documentation with allowance for extended reviews.

4. Confirmation through Lead Assembly Program

The scope of the Lead Assembly Program includes fabrication using the proven MIMAS process from Europe, shipping, irradiation and post-irradiation examinations. Lead assemblies will be supplied to Duke Power's McGuire Nuclear Station, Unit 2, for irradiation starting in October 2003. The lead assemblies will operate in high power, non-limiting locations that are representative of the batch peaking requirements. The lead assemblies will confirm the acceptability of the Mark-BW/MOX1 for certification of the mission reactor fuel for batch implementation. Furthermore, the lead assemblies will help to address: 1) use of weapons grade versus reactor grade plutonium, 2) operation with trace levels of impurities including gallium, 3) U.S. reactor operating conditions versus the European experience, 4) MOX fuel assembly neutronic response, and 5) licensing. Fabrication and delivery of the lead assemblies will provide the opportunity to demonstrate infrastructure issues associated with transportation, receipt, inspection, handling, safeguards, security, storage, and loading of the Mark-BW/MOX1, in advance of batch deliveries.

5. Certification and Mission Reactor Implementation

Having confirmed the expected performance of the Mark-BW/MOX1, the final step in the qualification process will be the Certification of Qualification to DOE for subsequent implementation of the MOX fuel on a batch basis in the mission reactors. Design and fabrication of the mission reactor fuel will be based on the same drawings, specifications and manufacturing processes as the Lead Assemblies to ensure that the fuel product for batch implementation is prototypical of the Lead Assemblies and the European MOX fuel.

Certification of completion of the Fuel Qualification Plan will be issued to DOE by October 2006, based on successful completion of the poolside examination of the lead assemblies following their second cycle of irradiation. This certification schedule supports the DOE requirement for batch irradiation to begin in 2007.

CONTENTS

Page

1. INTRODUCTION 1

2. OBJECTIVES 2

2.1 Material Disposition Program 2
2.2 Fuel Qualification Plan 2

3. FUEL QUALIFICATION STRATEGY 3

4. FUEL QUALIFICATION PROCESS 4

4.1 Process Steps 4
4.2 Schedule 5
4.3 Roles and Responsibilities 6
4.4 Assumptions 7
4.5 Interface with Other Program Elements 8

5. MOX FUEL PELLET SPECIFICATION 11

5.1 Mixed Oxide Fuel 11
5.2 Weapons Grade Plutonium versus Reactor Grade Plutonium 11
5.3 Specification 14

6. DESIGN AND ANALYSIS OF MARK-BW/MOX1 20

6.1 Fuel Rod Design 20
6.2 Utility Operating Information 21
6.3 Analytical Tools 21

7. CORE PERFORMANCE AND SAFETY EVALUATIONS 31

7.1 Performance/Safety Evaluation 31
7.2 Domestic Experience 42
7.3 European MOX Experience 48
7.4 NRC Interactions 54
7.5 Technical Issues 56

8. CONFIRMATION - LEAD ASSEMBLY PROGRAM 88

8.1 Purpose 89
8.2 Design Description 90
8.3 Fabrication 91
8.4 Lead Assembly Shipment 97
8.5 Lead Assembly Approval 98

8.6 Irradiation Plan 98
8.7 Fuel Examinations 99

9. CERTIFICATION AND BATCH IMPLEMENTATION 105

9.1 Production Design and Processes 105
9.2 Fuel Design Change Control 105
9.3 Shipping 106
9.4 Handling and Storage 106
9.5 Security and Safeguards 107

10. CONCLUSION 109

10.1 Action Plan 109
10.2 Certification of Fuel Qualification 110

11. REFERENCES 111

Appendix A QUALIFIED FUEL DESIGN 113

A.1 Design Description 113
A.2 Qualification Testing 117
A.3 Operating Experience 118
A.4 Compatibility 118

Appendix B DOMESTIC MOX EXPERIENCE 131
B.1 Saxton 131
B.2 Commercial LWR Irradiations 131
B.3 GETR Tests 132
B.4 INEEL ATR Tests 132

Appendix C WORLDWIDE MOX EXPERIENCE 133

C.1 Canada 133
C.2 Germany 133
C.3 Japan 134
C.4 Norway (Halden) 134
C.5 United Kingdom 135

Appendix D MOX PELLET SPECIFICATION 139

FIGURES

Page

Figure 4-1 Milestone Schedule 10
Figure 6-1 MOX Fission Gas Release 27
Figure 6-2 Nuclear Code Benchmarks 28
Figure 7-1 Mark-BW/MOX1 Fuel Assembly Design 71
Figure 7-2 Mark-BW Burnup Experience 72
Figure 7-3 Fuel Assembly Lateral Stiffness 73
Figure 7-4 Total Plutonium Mass 74
Figure 7-5 ^{240}Pu Concentration 75
Figure 7-6 Fissile Plutonium 76
Figure 7-7 Plutonium Fissions – Fraction of Total Fissions 77
Figure 7-8 k_∞ vs. Burnup 78
Figure 8-1 MIMAS Flow Diagram 102
Figure 8-2 MOX Fuel Power Histories 103
Figure A-1 Mark-BW/MOX1 Fuel Assembly 120
Figure A-2 Mark-BW/MOX1 Zircaloy Intermediate Spacer Grid Features 121
Figure A-3 Mark-BW/MOX1 Mid-Span Mixing Grid Features 122
Figure A-4 Mark-BW/MOX1 Upper Nozzle 123
Figure A-5 Mark-BW/MOX1 Lower Nozzle 124
Figure A-6 Mark-BW/MOX1 Fuel Rod Design 125
Figure A-7 Cladding Corrosion 126
Figure A-8 BPRA Design 127

TABLES

Page

Table 5-1 Comparison of Uranium Based and MOX Fuel (WG) Isotopics 17
Table 5-2 Typical plutonium isotopics (wt %) for the most abundant isotopes. 18
Table 5-3 Typical plutonium isotopics (wt %) for Weapons Grade material..... 19
Table 6-1 Mark-BW/MOX1 Design Summary 29
Table 6-2 MOX Fuel Criticality Experiments 30
Table 7-1 Lead Assembly Experience 79
Table 7-2 Fuel Assembly Spring Loads..... 80
Table 7-3 French MOX Qualification Program..... 81
Table 7-4 European Plants using MOX from MIMAS Process 82
Table 7-5 European MOX Burnup Experience..... 83
Table 7-6 Fuel Qualification Licensing Submittals 84
Table 7-7 Sample Unirradiated Nuclear Fuel Composition 85
Table 7-8 Sample Unirradiated Nuclear Fuel Isotopics..... 86
Table 7- 9 Gallium in UO_2 Fuel and Components..... 87
Table 8-1 Lead Assembly Poolside Post Irradiation Examination..... 104
Table A-1 Mark-BW Qualification Testing..... 128
Table A-2 Summary of M5^{TM} Irradiation Experience 129
Table C-1 German Irradiation Test Programs 136
Table C-2 Japanese Irradiation Test Programs 137

ACRONYMS

Acronym	Definition
ADU	Ammonium diuranate
APT	Average Power Test
ATR	Advanced Test Reactor
AUC	Ammonium uranyl carbonate
AUPuC	Ammonium uranyl-plutonyl carbonate
AOA	Axial offset anomaly
BN	BELGONUCLEAIRE
BOC	Beginning-of-cycle
BP	Burnable poison
BPRA	Burnable poison rod assembly
DCP	Distinctive CRUD pattern
DCS	Duke COGEMA Stone & Webster, LLC
DOE	Department of Energy
EDF	ElectricitJ de France
EOC	End-of-cycle
FRA-ANP (Fr)	Framatome ANP, SSA (France)
FRA-ANP (Ger)	Framatome ANP, GmbH (Germany), formerly Siemens
FRA-ANP (US)	Framatome ANP, Inc. (U.S.)
GWd/MThm	Gigawatt-Days per metric ton of heavy metal
HFP	Hot full power
Hm	Heavy metal – plutonium plus uranium isotopes
HZP	Hot zero power
IFBA	Integral Fuel Burnable Absorber
LANL	Los Alamos National Laboratory
LEU	Low enriched uranium
MD	Material disposition (program)
MFFF	MOX fuel fabrication facility
MFFP	MOX fresh fuel package (shipping)
MIMAS	Micronized master blend
MOX	Mixed Oxide-uranium dioxide and plutonium dioxide
MSMG	Mid-span mixing grid
MThm	Metric tons of heavy metal
MWd/MThm	Megawatt-Days per metric ton of heavy metal
NRC	Nuclear Regulatory Commission
OCOM	Optimized Co-milling
ORNL	Oak Ridge National Laboratory
PCI	Pellet-clad interaction
QA	Quality Assurance
RG	Reactor grade (plutonium)
SGT	Safeguards Transporter
T	Tonne – 1000 kg
WG	Weapons grade (plutonium)

This Page
Intentionally Left Blank

1. INTRODUCTION

The U.S. Department of Energy (DOE) has recommended that a significant portion of the nation's surplus weapons-grade plutonium be disposed of by reconstituting the plutonium into mixed-oxide (MOX) fuel rods and burning in commercial light water reactors. Accordingly, the DOE has contracted with Duke COGEMA Stone & Webster (DCS) to design and license the MOX fuel, fabricate lead assemblies, irradiate the lead assemblies, and ultimately qualify the design for batch irradiation starting in 2007.

The DCS team performing the qualification brings together the experience and expertise of Duke Engineering, COGEMA, Stone & Webster, Framatome ANP, Inc. [FRA-ANP (US)], and Duke Power, with the support of Framatome ANP, SSA [FRA-ANP (Fr)], ElectricitJ de France (EDF), and BELGONUCLEAIRE (BN).

Fuel Qualification Strategy

> The overall strategy for Fuel Qualification is based on the application of extensive European experience to a proven fuel assembly design and confirmed with a lead assembly irradiation of prototypical fuel in one of the mission reactors.

Fuel Qualification Process

> This Fuel Qualification Plan outlines the step-by-step process to be followed for implementing the strategy presented above. The process for fuel qualification consists of the tasks to be performed in qualifying the fuel for disposition of the weapons grade plutonium in the mission reactors. Through these steps, the Fuel Qualification Plan addresses the issues associated with implementation of MOX fuel in the U.S. and the technical approach to resolving those issues.

Fuel Assembly Design Designation

> The MOX fuel assembly to be qualified is designated the Mark-BW/MOX1, FRA-ANP (US)'s Advanced Mark-BW fuel assembly design, with slight modification to the internal rod volume to accommodate the larger fission gas release associated with MOX fuel.

The organization of this document follows the process steps for qualifying the MOX fuel for use in the mission reactors: Section 2 lists the objectives of the DOE program and the objectives of the fuel qualification effort. Section 3 summarizes the strategy for fuel qualification and the assumptions necessary for implementation. The process steps are summarized in Section 4, including the roles and responsibilities of the DCS team members for performing these tasks, and the schedule for implementation; the details of each process step are provided in Sections 5-9. Section 10 provides the Conclusion, with an Action Plan leading to a Certification of Fuel Qualification. Section 11 contains References. Appendices are provided for technical detail and supporting documentation.

2. OBJECTIVES

2.1 Material Disposition Program

The overall objective of the DOE MOX Fuel Project is to transform 33 metric tons of the nation's surplus weapons grade plutonium into a form that meets the spent fuel standard by irradiation in commercial light water reactors by 2022. To accomplish this objective it is expected that irradiation of batch quantities of MOX fuel will begin in 2007, with all MOX fuel being irradiated for at least two fuel cycles. All MOX fuel should achieve at least one cycle of operation and a minimum burnup of 20,000 MWd/MThm by 2002.

To achieve these objectives the Mark-BW/MOX1 must be certified for batch implementation during 2006, the year prior to the loading of the first production batch. The process by which the fuel is certified as fully qualified for this mission is detailed in this Fuel Qualification Plan.

2.2 Fuel Qualification Plan

The objective of the Fuel Qualification Plan is to demonstrate the safe and reliable operation of the fuel design that will be used for the disposition of the weapons-grade (WG) plutonium. The program will establish for the public, the NRC, DOE, and Duke Power that operation of the Mark-BW/MOX1 in a commercial nuclear reactor will be acceptable from a public safety, regulatory, and performance perspective. The Fuel Qualification Plan will confirm that all aspects of the fuel rod design, fuel assembly design, and fuel fabrication process will provide reliable, safe operation, comparable to equivalent UO_2 designs.

3. FUEL QUALIFICATION STRATEGY

The overall strategy for the qualification effort is based on the extensive European experience applied to a proven fuel assembly design and confirmed with a lead assembly irradiation with prototypical fuel in one of the mission reactors.

- Through the DCS team, the extensive European experience and technology gained in designing, fabricating and irradiating MOX fuel in commercial pressurized water reactors (PWRs) is transferred to the U.S. where it is applied to a proven fuel assembly design. The use of an existing, proven fuel assembly design as the platform for the introduction of the MOX pellet will allow qualification efforts to focus specifically on the MOX pellet.

- Fabrication processes developed by COGEMA/ BELGONUCLEAIRE will be replicated in the U.S. facilities for producing the MOX fuel. Use of this proven MIcronized MASter blend (MIMAS) process for producing the MOX fuel pellets ensures that the performance of the U.S. produced MOX fuel is consistent with the European data base.

- The fabrication process for the WG material includes an aqueous polishing step to remove impurities, most notably gallium. The use of polished plutonium ensures that the MOX fuel produced with the MIMAS process in the U.S. with WG plutonium is consistent with the MOX fuel produced and irradiated in Europe. This direct link to the European MOX fuel ensures the materials and operational data from Europe are applicable to the U.S. program.

- Confirmation of the MOX fuel fabrication processes and fuel performance is obtained through the fabrication, shipment, irradiation and post-irradiation examination of lead assemblies.

This Fuel Qualification Plan details the steps to be followed in meeting the objectives based on this overriding strategy.

4. FUEL QUALIFICATION PROCESS

The steps to qualify the Mark-BW/MOX1 for use in mission reactors are summarized below and detailed in the following Sections (Section 5.0 – 9.0). In addition to summarizing the process steps, this section provides the overall schedule for completing these tasks and lists the DCS team member responsible for each task. Assumptions required for successful completion of the qualification effort are also detailed.

4.1 Process Steps

4.1.1 Develop MOX Fuel Pellet Specification

The MOX pellet specification will be based on the COGEMA/FRA-ANP (Fr) European MOX experience and the FRA-ANP (US) UO_2 experience, and will address the issues associated with weapons grade plutonium versus reactor grade plutonium, i.e. isotopics and specific impurities (gallium).

4.1.2 Analysis of Mark-BW/MOX1

The Mark-BW/MOX1 fuel rod design will incorporate the MOX pellet and will be slightly different from that of the UO_2 version of the Advanced Mark-BW, to accommodate the increased fission gas release associated with MOX fuel. A slightly longer fuel rod will be used, and the active fuel stack will be shortened if needed; all other external (to the fuel rod) dimensions, materials, and specifications will remain the same as the UO_2 version of the Advanced Mark-BW. A complete Technical File for the Mark-BW/MOX1 will be prepared reflecting the fuel rod design change and provided to the mission reactor utility and the fabrication facilities as a design interface document. Analyses of the Mark-BW/MOX1 will be performed to confirm the performance.

4.1.3 Core Performance and Safety Evaluations

Having completed the analyses of the Mark-BW/MOX1 to confirm the fuel assembly performance with MOX pellets, the qualification process next evaluates the mission reactor core performance, operating with the Mark-BW/MOX1 assembly. The core evaluations will be performed by Duke Power, supported by the extensive European experimental database and operating experience.

4.1.4 Confirmation through Lead Assembly Program

Confirmation of the licensing basis for the Mark-BW/MOX1 operating in the mission reactor core will be obtained through a Lead Assembly Program. The scope of the Lead Assembly Program includes fabrication of Mark-BW/MOX1 fuel assemblies using the proven MIMAS process from Europe, shipping,

irradiation in high power, non-limiting core locations, and post-irradiation examinations.

4.1.5 Certification and Mission Reactor Implementation

Having confirmed the performance and licensing basis of the MOX fuel design, the final step in the confirmation process is the Certification of Qualification to DOE for subsequent implementation of the MOX fuel on a batch basis in the mission reactors.

This certification schedule is based on the assumption that the lead assembly PIE results confirm the expected performance. Should the PIE results not confirm acceptable performance, or if there are unexplained anomalies, the schedule for certification will be delayed until the technical issues are resolved.

4.2 Schedule

An integrated milestone schedule for the execution of this Fuel Qualification Plan is shown in Figure 4-1.

4.2.1 Design and Licensing

Key milestones in the design and analysis process include:

Submit COPERNIC MOX Addendum to NRC	August 2000*
Complete WG MOX Pellet Specification	February 2000*
Submit new Appendix to Duke Power Thermal-Hydraulic Statistical Core Design Methodology to NRC	July 2001
Submit LOCA EM MOX Addendum to NRC	August 2001
Submit RELAP/MOD2 B&W Revision to NRC	August 2001
Submit CASMO4/SIMULATE-3 MOX to NRC	August 2001
Submit MOX Fuel Design Topical	August 2001
Submit revised Mark-BW Mechanical Design Topical (BAW-10172) to NRC	August 2001
Submit McGuire 2 License Amend. Request with Lead Assembly Addendum to NRC	August 2001
Issue Final Design Interface Document	July 2002
Complete Final Design Review	July 2002
Submit Duke Power Safety Analysis Methodology for MOX Fuel Cores Topical to NRC	December 2002

*complete

4.2.2 Lead Assembly

The schedule for activities supporting the Lead Assembly Program are shown below:

4.2.2.1 Fabrication

Complete lead assembly pellet fabrication	March 2003
Complete lead assembly qualification	May 2003
Complete lead assembly certification	July 2003
Complete lead assembly shipment	August 2003

4.2.2.2 Irradiation

Start lead assembly irradiation	October 2003
Complete 1st cycle irradiation	March 2005
Start lead assembly 2nd cycle irradiation	April 2005
Complete 2nd cycle irradiation	September 2006

4.2.2.3 Examinations

Perform 1st cycle poolside PIE	March 2005
Perform 2nd cycle poolside PIE	September 2006

4.2.3 Certification

Certification of completion of the Fuel Qualification Plan will be issued by FRA-ANP (US) to DOE upon completion of the second cycle PIE on the Lead Assemblies and analysis of the results confirming acceptable performance.

Certification for Batch Implementation	October 2006

4.2.4 Post-Fuel Qualification/Certification Activities

Start lead assembly 3rd cycle irradiation	October 2006
Complete 3rd cycle irradiation	March 2008
Perform 3rd cycle poolside PIE	March 2008
Rod extraction and shipment to hot cell	November 2008
Completion of hot cell PIE on 3rd cycle rods	November 2009

4.3 Roles and Responsibilities

DCS will address the steps of the Fuel Qualification Process with the resources of its entire team. The team members responsible for each task, and the supporting organizations, are listed below:

Task	Responsible Team Member
Coordination and Interface	Duke COGEMA Stone & Webster
Fuel Qualification	Framatome ANP, Inc. (U.S.)
Provide MOX Fuel Fabrication Technology	COGEMA/ BELGONUCLEAIRE
Provide MOX Fuel Design Experience	Framatome ANP (France)
Provide MOX Fuel Operating Experience	FRA-ANP (Fr)/EDF
Fabricate Lead Assembly	Framatome ANP, Inc. (U.S.)
Perform Lead Assembly Irradiation	Duke Power

4.4 Assumptions

The work scope and schedule planned for the Fuel Qualification effort are based on the following assumptions:

- Lead assemblies will be fabricated on a schedule that supports the delivery to McGuire Unit 2 for startup of Cycle 16.

Note – The DOE has decided to curtail lead assembly fabrication activities at Los Alamos National Laboratory (LANL), and is currently evaluating the available options for lead assembly fabrication. For the purposes of this Fuel Qualification Plan, it is assumed that the original LANL lead assembly fabrication schedule will be maintained. Consistent with the DOE decision regarding LANL, specific details of lead assembly fabrication will be omitted from the Fuel Qualification Plan until DOE has issued its decision on lead assembly fabrication. This Fuel Qualification Plan will then be revised consistent with that decision, with respect to the number of lead assemblies, the place of fabrication, and the overall schedule.

- The Fuel Qualification certification schedule assumes that the host reactor for lead assembly irradiation (McGuire Unit 2) completes two cycles of operation, following lead assembly insertion, prior to the end of 2006.
- The Department of Energy (DOE) will supply polished PuO_2 powder that meets the technical requirements of the fuel specification.
- The DOE will supply polished PuO_2 powder on a schedule that meets the requirements of the lead assembly fabrication schedule.
- The WG plutonium to be used for the lead assembly or mission reactor fuel contains only known contaminants that will be reduced to acceptable levels by the polishing process. Acceptable levels will be defined and monitored by pellet/powder specification and process monitoring.
- The NRC will issue the necessary license amendment for McGuire Unit 2 to allow lead assembly irradiation.

4.5 Interface with Other Program Elements

Fuel qualification is broadly described as those activities that must be accomplished in order to meet the host site utility's requirements and NRC requirements. Thus, fuel qualification involves fuel shipping, reactor licensing, and fuel irradiation activities as well as fuel qualification activities. These other elements of the DCS project integrate with the fuel qualification effort as outlined below:

4.5.1 Mission Reactors Irradiation Plan

Concurrent with the initial release of the Fuel Qualification Plan, DCS issued a Mission Reactors Irradiation Plan (Reference 1) to detail the utility's plans to use MOX fuel starting in 2007. The primary interface between the Mission Reactors Irradiation Plan and the Fuel Qualification Plan is that fuel qualification must be successfully performed in order to implement the Irradiation Plan. Certification of completion of the Qualification Plan must be provided to DOE by October 2006 in order to support the Irradiation Plan's schedule for disposal of the surplus WG material. This Certification will allow the host utility to proceed with the Irradiation Plan, pending NRC issuance of a site-specific license amendment for each mission reactor.

Completion of the Fuel Qualification efforts requires the coordination of activities with the host utility. As noted in the Mission Reactors Irradiation Plan, the fuel performance objectives are provided by the utility. Through the fuel cycle design process, the utility will specify the plutonium loading for the fuel assembly, the loading for each of the enrichment zones within the fuel assembly, the boron concentration for the BPRAs and the number and location of the individual pins within the BPRA.

The fuel assembly design details used by the utility to perform the core design is specified in the Design Interface Document, which also specifies to the utility any limits of operation derived from calculations on fuel performance using the COPERNIC code. This Design Interface Document is also supplied to the fabrication facility to ensure that all parties utilize identical information for the design and fabrication of the fuel.

The utility has the responsibility to benchmark and verify their neutronic codes for application to MOX fuel, and have that methodology approved by the NRC. This activity by the utility is a necessary step in the overall Fuel Qualification process.

4.5.2 Mission Reactors Licensing Plan

The DCS team issued a Mission Reactors Licensing Plan (Reference 2) in November, 2000, detailing the steps to be taken by Duke Power in licensing the mission reactors for MOX fuel implementation. The non-LOCA safety analyses

anticipated to be needed in support of the batch implementation of the Mark-BW/MOX1 are described in this plan. Although not necessary for lead assembly approval, NRC approval of these analyses supports the overall fuel qualification effort. Duke Power's plans for handling, storage, safeguards and security for the Mark-BW/MOX1, both for lead assemblies and batch implementation, are summarized. A Design Interface Document, produced as a part of the fuel qualification effort, will provide the utility with the Mark-BW/MOX1 design details and operating limits for performing the safety analyses.

4.5.3 Special Nuclear Material (SNM) Transportation and Integration Plan

Plans for shipping the production Mark-BW/MOX1 from the MOX Fuel Fabrication Facility are detailed in the DCS document, SNM Transportation Integration Management Plan (Reference 3), released November 17, 1999. These plans support the fuel qualification effort by assuring that the fresh fuel shipping package is designed, fabricated, tested and licensed on a schedule to support the Certification of completion of the Fuel Qualification Plan. The Design Interface Document produced under the fuel qualification effort will provide the DCS team member, TransNuclear/Pac-Tec, with the required Mark-BW/MOX1 interface requirements.

4.5.4 MOX Fuel Fabrication Facility Design

The design of the MOX Fuel Fabrication Facility (MFFF) will use Mark-BW/MOX1 design specifications and drawings to ensure that the manufactured product meets all technical requirements. The Design Interface Document produced under the fuel qualification effort will be provided to the MFFF designers to ensure consistency with the lead assemblies produced at LANL, and to maintain consistency with the European database. Also, the Fuel Fabrication Manager for the lead assembly fabrication works under the direction and guidance of the MFFF Process Manager regarding issues of fuel design and prototypicality.

Figure 4-1 Milestone Schedule

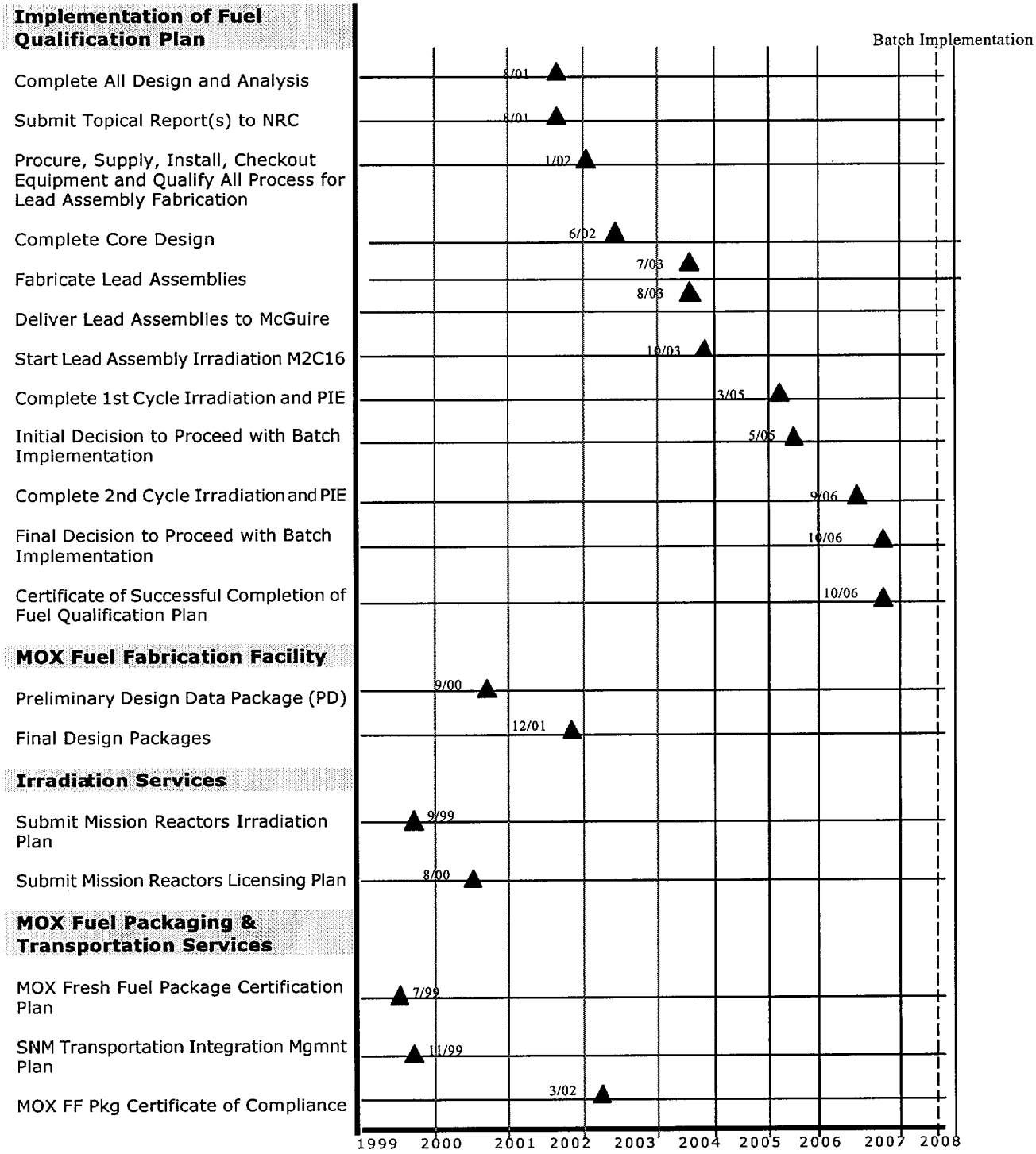

5. MOX FUEL PELLET SPECIFICATION

Development of a specification for the MOX fuel pellet design is the first step in the Fuel Qualification Process. This specification is derived from the FRA-ANP (Fr) specification for MOX pellets used with COGEMA supplied MOX fuel in Europe using the MIMAS process. Since the MIMAS process will be replicated in the U.S. fabrication facilities for the MD program, this European experience is directly applicable.

The European specification must be adapted to the weapons grade plutonium being supplied by DOE. The following section details the modifications necessary to the FRA-ANP (Fr) specification to accommodate the WG material. As background information, the general issues associated with mixed oxide fuel relative to uranium based fuels are discussed, and the differences between WG and RG material are presented. The final product of this step in the qualification process is the preparation of the Mark-BW/MOX1 pellet specification, as detailed in Section 5.3.3.

5.1 Mixed Oxide Fuel

Mixed oxide (MOX) fuel is an intimate mixture of PuO_2 in a depleted or natural uranium oxide matrix. With UO_2 fuel, the fissionable component is provided by ^{235}U. The ^{235}U concentration is specified by the fuel designer and produced through the enrichment process. With MOX fuel, the ^{239}Pu isotope provides most of the fissionable component. This concentration is also determined by the fuel designer, but the quantity of PuO_2 added is controlled by the pellet manufacturing process.

When inserted into the reactor, uranium based fuel operates as mixed oxide fuel soon after irradiation begins due to the generation and subsequent burning of plutonium. Both fuels, uranium based as well as MOX, are primarily ^{238}U, as shown in Table 5-1. At Beginning-of-Life (BOL) the uranium-based fuel has no plutonium, but by the End-of-Life (EOL) the uranium-based fuel is producing a significant portion (about 40%) of its power from the plutonium that has been generated during operation. Thus, uranium oxide and MOX fuels are quite similar, with physical characteristics that are virtually identical. However, there are differences in isotopics and properties that affect performance; these difference have been successfully addressed, as evidenced by the extensive European experience with MOX fuel in commercial reactors.

5.2 Weapons Grade Plutonium versus Reactor Grade Plutonium

The MOX fuel produced from weapons-grade material will be virtually identical to the fuel produced from reactor-grade material in terms of physical characteristics and performance. The major differences between the materials, and the issues these differences introduce, are discussed below.

5.2.1 Plutonium Isotopics

Reactor-grade plutonium is produced from reprocessed spent LWR uranium based fuel that has been irradiated to commercial burnups, typically in the range of 30,000 to 50,000 MWd/MTU. The plutonium isotopes produced at these burnups, and extracted following irradiation, include significant percentages of ^{240}Pu, ^{241}Pu, and ^{242}Pu. The weapons-grade plutonium is created from irradiating ^{238}U to very low burnups and separating the plutonium before substantial percentages of the heavier plutonium isotopes build up. Whereas the RG material typically has 24% ^{240}Pu, the WG material is limited to less than 7% ^{240}Pu. These differences in isotopics are readily addressed through the appropriate analytical model, as discussed in the sections on modeling and verification. See Table 5-2 for typical plutonium isotopic composition of WG and RG material.

The use of WG plutonium significantly reduces the PuO_2 content of MOX fuel relative to RG material. The WG material is about 95% fissile, whereas the RG material contains significant amounts of absorber isotopes (^{240}Pu, ^{242}Pu). Thus, MOX fuel from RG material can require Pu contents as high as 8% to 9%.

The use of WG plutonium significantly reduces the radioactivity of MOX pellets relative to RG material. As noted above, the WG material allows a reduction in the PuO_2 content. Furthermore, the WG material contains much smaller levels of the main neutron emitters – ^{238}Pu, ^{241}Am, and ^{240}Pu – than the RG material. Thus the neutron dose from WG material is significantly reduced compared to the RG material. In a similar manner the heating due to the alpha activity, primarily from ^{238}Pu and ^{241}Am, and the gamma dose rates from these two isotopes are significantly smaller for WG MOX pellets compared to the RG material.

5.2.2 Impurities

The use of alloying materials in the production of plutonium metals for weapons creates a second major difference between the WG and RG materials. Such alloying elements would appear as impurities in WG plutonium dioxide powder when used for LWR operation if the elements were not first removed from the plutonium metal. The impurity identified as the one of most concern is gallium because it is known to react with a number of metals and alloys including zirconium. The WG material being supplied for the plutonium disposition mission will contain gallium, at a maximum concentration of 1.2%.

Gallium and other impurities will be effectively eliminated through the use of an aqueous polishing process step added to the manufacturing process

being used to produce the MOX fuel. The solvent extraction polishing operation is expected to produce purity levels for the WG material consistent with that of the RG material. A discussion of the gallium levels achieved with this process, and the gallium levels found in normal operating uranium fuels is provided in Section 7.5.1.4.

5.2.3 Pellet Microstructure

Uranium dioxide fuel is enriched in the ^{235}U isotope, an operation that occurs on a molecular scale. Homogeneity of the product is thus guaranteed on a very fine scale since the enrichment operation is in the gaseous phase. Metallographic examinations of sintered UO_2 pellets will thus show very uniform appearances and grain sizes. By contrast, MOX manufactured by the MIMAS process involves blending and milling of UO_2 and PuO_2 powders (master mix) and then dilution of the master mix with more UO_2 to reach the final Pu content. The products of this process are not as homogeneous as the UO_2 pellet on a micro-scale although they approximate to the same condition on a macro-scale. Microscopic examination of MOX pellets shows Pu finely dispersed in a UO_2 matrix and micron size islands of Pu rich particles. The particles are not pure PuO_2 particles but master mix particles with a maximum Pu content determined by the ratio of UO_2 to PuO_2 in the master mix.

For reactor grade plutonium used in Europe, this ratio of UO_2 to PuO_2 in the master mix is typically 70/30. Due to the different isotopics the weapons grade material will have an equivalent fissile content approximately 50% greater than that of the reactor grade material. Therefore, the master mix ratio will be changed to 80/20 for the weapons grade material to ensure that the fissile content of the Pu rich particles remains the same as the reactor grade material, and consistent with the European experience base.

The 80/20 mix being used for the WG material is within the COGEMA/BELGONUCLEAIRE experience base for the MIMAS fuels produced in Europe. The MIMAS process has been qualified in Europe for a range of UO_2 /PuO_2 mixtures, including the 80/20 mix to be used for the WG material. Production quantities of MIMAS fuel using a plutonium primary blend of 20.5% to 25.9% were fabricated for the SENA reactor. This fuel used plutonium with a fissile content (^{239}Pu plus ^{241}Pu) of 75%. These fuels were irradiated in SENA for three cycles with no problems or issues.

For design and safety evaluations, it is necessary to control the maximum size and Pu content of the particles. This is done during production through a milling and sieving operation followed by a sintering process that induces diffusion of the PuO_2 bearing particles into the UO_2 lattice.

Control of the process is verified through metallographic examination and autoradiography of a representative number of samples from each batch of pellets. These examinations provide measurements of the effective particle size, the grain size and the plutonium content. Alternatively, these parameters can be measured using Electron Probe Micro Analysis (EPMA) during qualification, with the process monitored during fabrication using metallography and autoradiography. One of the primary criterion for acceptance of MOX fuel batches is the microstructure.

5.3 Specification

5.3.1 FRA-ANP (US) UO_2 Specification

The FRA-ANP (US) UO_2 pellet specification has been developed over an extended period of time to define the requirements for a pellet that essentially guarantees zero probability of failure under irradiation. Of the very few fuel rod failures experienced by FRA-ANP (US), none have been attributed to pellet problems over the last 20+ years. The early failures experienced by other nuclear fuel suppliers due to hydriding and fuel densification are all adequately controlled by design and/or pellet processing. The essential requirements of the specification cover the O/U ratio, or stoichiometry, the impurity content including Equivalent Boron Content (EBC) and hydrogen values, the resinter densification characteristics, the grain size, the uranium and isotopic content, the density and the dimensions. Additional control is imposed on the fissile content per linear inch to address specific reactor criteria. Certain specification criteria are required on a batch basis while others may be addressed on a qualification basis only. Acceptance of qualification data is based on a thorough understanding of the production process and the fact that the manufacturer does not deviate from qualified production parameters.

5.3.2 FRA-ANP (Fr) MOX Specification

The FRA-ANP (Fr) MOX pellet specification is quite similar to the FRA-ANP (US) UO_2 pellet specification where such requirements are common since MOX fuel is 95% UO_2. For example, the O/U (oxygen/uranium) requirement of 1.99 to 2.02 for the FRA-ANP (US) UO_2 specification is essentially the same as the O/M (oxygen/heavy metal) requirement of 1.98 to 2.01 for the FRA-ANP (Fr) MOX specification recognizing that the PuO_2 addition tends to decrease the O/M ratio. The impurity lists are also similar; however, limits on some additional elements such as gallium will be addressed for the WG specification.

In some areas the MOX specification covers additional limits, primarily the size of the plutonium rich particle and the concentration of the

plutonium content. Additional analyses are also required for the plutonium isotopes and other transuranic elements associated with RG PuO_2.

5.3.3 Mark-BW/MOX1 Pellet Specification

The Mark-BW fuel assembly (UO_2) using the FRA-ANP (US) pellet specification has been loaded in eight Westinghouse-designed 17x17 reactors, including all four of the mission reactors, and has operated successfully. The fuel specification for the Mark-BW/MOX1 will be based on the FRA-ANP (US) UO_2 pellet specification with integration of the FRA-ANP (Fr) MOX specification for all aspects specific to MOX. Use of the existing FRA-ANP (US) specification as the basis provides consistency with existing FRA-ANP (US) performance, ordering practice and supporting analyses, e.g. hot channel factor criteria are addressed and controlled.

This specification conveys all of the MOX requirements from the European experience while adding limits necessary to address WG plutonium. Criteria derived from the MOX pellet requirements include plutonium homogeneity, plutonium rich particle size, and derivation of the equivalent fissile content. The specification also defines the criteria for three MOX pellet types associated with plutonium concentration zones within an assembly. The specific plutonium concentrations for each of the zones vary with the plutonium isotopic content and with the design burnup of the assembly. These concentrations will not be defined in the specification since they may vary with each reload.

A limit on gallium is added to the specification since this limit does not currently appear in the FRA-ANP specifications. The value is based on ORNL studies that have confirmed that a Decontamination Factor (DF) of 10^5 will be achievable for the aqueous polishing process. The maximum gallium content will be imposed on the PuO_2 powder specification at the 120 ppb level, based on a maximum gallium level of 1.2% prior to polishing. (Detection limits of 10-20 ppb on the PuO_2 powder are achievable with high-resolution mass spectrometry, even after dilution.) With the MOX pellet containing less than 5% PuO_2, the resulting gallium contribution from the WG plutonium in the finished pellets will be on the order of 6 ppb or less. As discussed in Section 7.5.1, comparable trace levels of gallium are found in UO_2 fuels; limiting the gallium contribution from the polished PuO_2 to approximately 6 ppb or less will ensure that the final gallium content of the finished MOX pellet remains in the range of current operating LEU fuels. Thus, there will be no detrimental effects on fuel performance, and the applicability of the European RG plutonium database is ensured.

The MOX pellet specification and drawing will place tolerances on the allowable variation in specific Pu and U isotopes for a given fuel batch. Some deviation from the normal isotopic distribution is expected from batch to batch and can be accommodated by making appropriate adjustments in the specification. The range of acceptable isotopics is provided in Table 5-3.

A summary of the specification is given in Appendix D.

Table 5-1 Comparison of Uranium Based and MOX Fuel (WG) Isotopics

Isotope	Uranium Fuel BOL	MOX Fuel BOL	Uranium Fuel (55,000 MWd/MTU)	MOX Fuel (45,000 MWd/MThm)
^{234}U	0.04	0.00	0.02	0.00
^{235}U	4.60	0.24	0.82	0.09
^{236}U	-	-	0.62	0.03
^{238}U	95.36	95.39	91.51	92.28
^{238}Pu	-	0.00	0.04	0.02
^{239}Pu	-	4.08	0.65	1.39
^{240}Pu	-	0.29	0.28	0.85
^{241}Pu*	-	0.00	0.19	0.50
^{242}Pu	-	0.00	0.09	0.16
^{241}Am*	-	0.00	0.01	0.02

Concentration (wt% of initial heavy metal) for the most abundant isotopes in uranium and MOX fuels.

*Amount varies with decay time.

Table 5-2 Typical plutonium isotopics (wt %) for the most abundant isotopes.

Plutonium Isotope	Weapons Grade	Reactor Grade
^{238}Pu	0.0	1.0
^{239}Pu	93.6	59.0
^{240}Pu	5.9	24.0
^{241}Pu*	0.4	11.0
^{242}Pu	0.1	5.0
^{241}Am*	0.0	1.0

*Amount varies with decay time.

Table 5-3 Typical plutonium isotopics (wt %) for Weapons Grade material, with acceptable ranges

Plutonium Isotope	Weapons Grade	Acceptable Range
^{238}Pu	0.0	#0.05
^{239}Pu	93.6	90.0-95.0
^{240}Pu	5.9	5.0-9.0
^{241}Pu	0.4	#1.0
^{242}Pu	0.1	#0.1

6. DESIGN AND ANALYSIS OF MARK-BW/MOX1

The second task in the Fuel Qualification Process is the design and analysis of the fuel assembly utilizing the MOX fuel pellet specification. This task requires analytical tools properly modified and verified with applicable data to accommodate MOX material properties and operating characteristics. These upgraded models will be submitted to the NRC for review and approval. The approved models will then be available for use in the performance evaluations to be performed in Section 7.0.

6.1 Fuel Rod Design

Following development of the MOX pellet specification, the fuel rod design is set to accommodate the utility's operational requirements, as defined in Section 6.2, while meeting licensing requirements for fuel rod performance, including fission gas release and internal pin pressure. As noted in Section 6.3.1, the increased operating temperatures and microstructure of the MOX pellet will create a slight increase in fission gas release that is accommodated in the fuel rod design through increases in plenum volume. No other changes to the fuel assembly design are required to accommodate the MOX pellet. By using a previously qualified fuel assembly design as the platform for the MOX design, the licensing effort can focus on the pellet and fuel rod design.

The fully qualified fuel assembly chosen by the DCS team for the MOX application is FRA-ANP (US)'s Advanced Mark-BW design. For its application to MOX pellets, the design has been designated Mark-BW/MOX1. The Mark-BW/MOX1 assembly will contain the features of the base Mark-BW, plus M5™ fuel rod cladding and mid-span mixing grids (MSMGs). This product for UO_2 applications, with the M5™ cladding and MSMGs, is designated Advanced Mark-BW. A comparison of the Advanced Mark-BW for UO_2 applications and the Mark-BW/MOX1 is presented in Table 6-1. A complete design description of this 17x17 product for Westinghouse-designed reactors can be found in Appendix A, including details of the qualification testing performed on the base Mark-BW and the Advanced Mark-BW, and operating experience. This experience includes current operation of the base Mark-BW in all four of the mission reactors. Details of the Mark-BW's compatibility evaluations with resident fuel designs are also provided in Appendix A.

The M5™ fuel rod cladding being utilized on the Mark-BW/MOX1 has been reviewed and approved for batch implementation by the NRC (Reference 4). This review included the performance of the cladding material for normal operation as well as LOCA conditions. This cladding material demonstrated a significant reduction in steady state corrosion and fuel rod growth relative to Zircaloy-4. For application to the MOX design, with a projected burnup limit of 50,000 MWd/MThm (maximum fuel rod,) there will be significant margin to design limits through the use of this advanced cladding. The reduced steady state

corrosion levels will provide additional margin for the reactivity insertion accident evaluation.

The expected operating conditions (power level, coolant temperatures, burnup) of the mission fuel are bounded by the data for M5™ cladding submitted to the NRC in support of the topical report on M5™. The NRC technical approval for the use of M5™ applies to use in the mission reactors, at burnups in excess of those projected in the Mission Reactor Irradiation Plan. (Administratively, the plant Technical Specifications at the mission reactors will need to be modified prior to batch implementation of M5™.)

The reduced oxide buildup of the M5™ cladding is particularly effective at high burnup. At low burnup, where debris fretting failures have been observed, the protective oxide layer has been observed to be essentially the same as Zircaloy 4, thereby assuring that there will be no additional risk of debris fretting failure with M5™ cladding.

6.2 Utility Operating Information

The fuel rod for MOX applications is designed to satisfy the utility's needs with respect to performance capability and operational lifetime. This input to the design process is provided by the utility in terms of the fuel cycle design pin power peaking for the MOX fuel as a function of reactor operating time. Additional requirements, such as coolant chemistry or reactor coastdown capability, are also considered in the design process. Once the design has been established, the rod capabilities are conveyed to the utility though the Design Interface Document, which establishes limits for the fuel cycle designer. The final fuel cycle design is then performed by the utility to meet the operational limits set by FRA-ANP (US) for the MOX fuel.

6.3 Analytical Tools

Design and analysis tools affected by the replacement of UO_2 fuel with MOX fuel require modification and verification. The modified codes will then be submitted to the NRC for review and approval. No code modifications are required to accommodate the approved M5™ cladding; the M5™ models (creep, corrosion, growth) are contained within the current UO_2 version of COPERNIC.

6.3.1 Fuel Performance – COPERNIC

COPERNIC (Reference 5) is a recently developed fuel performance code that is being implemented by FRA-ANP (Fr) in Europe and FRA-ANP (US) in the United States. It produces accurate steady-state and transient extended-burnup fuel performance predictions and can be applied to UO_2, UO_2-Gd_2O_3, and MOX fuel types.

COPERNIC is based upon the TRANSURANUS code, which contains a modern architecture that provides fast, accurate, and numerically stable solutions. It also offers the flexibility for incorporating complex fuel rod models. COPERNIC contains pre- and post processors that improve the speed and ease of using the code. Further modifications to the TRANSURANUS code contained in COPERNIC include advanced material models and refined thermal, mechanical, and fission gas release models. The improved mechanical models include discrete radial modeling of the cladding, fuel-cladding mechanical interaction, fuel mechanical relocation effects, and high stress material models that are benchmarked to ramp test data.

COPERNIC models specific to MOX fuel were developed for thermal conductivity, MOX material melting point, radial power profiles and fission gas release. The other phenomena are common to UO_2 fuel, vary little from UO_2 fuel or are conservatively described by the UO_2 model.

The thermal models in the COPERNIC code contain advanced gap conductance, gap closure, fuel thermal conductivity, radial power profile, and fuel rim models. For the MOX fuel, COPERNIC will use specific thermal conductivity, melting point, and power distribution models.

The COPERNIC fission gas release models contain algorithms that are optimized for both steady-state and transient conditions. The MOX steady-state and transient fission gas release models were developed recognizing the non-homogeneity of MOX fuel as compared to UO_2 fuel. PuO_2 is present in the matrix both in the form of Pu-rich particles and as a solid solution. The burnup and fission product concentrations are much higher in the heterogeneous zones of plutonium rich particles than in the rest of the fuel matrix. In these zones, the fission products can migrate to the outside of the zones in which they were created, afterwards diffusing and following the release laws of the surrounding fuel matrix. This phenomenon may lead to partial release of these fission products to the outside of the fuel by free paths. Hence, a generally larger gas release may be observed for MIMAS produced MOX fuel than for UO_2.

As noted in Section 7.3.5.1 the predominant factors affecting fission gas release from UO_2 or MOX fuel are the power and temperature of the rod. The COPERNIC models have been shown to accurately predict measured gas release from MOX fuel rods, including those subjected to transients. (See figure 6-1)

The pellet strain model shows many common features between the UO_2, Gd_2O_3 and MOX fuels. Thus, no specific adaptation was necessary to correctly predict the MOX fractured fuel relocation model, since

measurements and predictions agreed as well as for UO_2 rods. The densification model for the UO_2 fuel matrix was shown in the 70s to be the same for Pu-bearing fuel. The UO_2 gaseous swelling model was also applied to MOX.

The cladding strain is the result of the interactions of irradiation creep, high stress creep/relaxation and irradiation growth. The mixed-oxide fuel influence depends upon the strain phenomenon considered, as well as the nature of the cladding, since various models exist for each type of cladding. Thus, the irradiation creep modeling for MOX-filled stress-relieved Zircaloy-4 cladding yields dimensional variations that are equivalent to those observed for UO_2, except that a coefficient is applied for fast flux variations. The irradiation growth is affected similarly. However, the nature of the fuel pellet does not affect the modeling of the high stress creep and relaxation phenomenon, since this is a mechanical interaction between pellets and cladding.

Corrosion predictions for MOX fuel use the same models developed for the UO_2 fuels.

The small projected increase in fuel temperatures related to a reduction in thermal conductivity will be calculated by COPERNIC. Fuel temperature predictions used for core safety analyses will directly include the effects of the MOX fuel influence on thermal conductivity.

The COPERNIC predictions have been benchmarked to an extensive database that includes data from international as well as the following French proprietary programs: BOSS, CONTACT, GRIMOX, REGATE, RECOR, GONCOR, and HATAC.

- The COPERNIC thermal models have been benchmarked with approximately 2000 centerline temperature measurements for rod average burnups up to 102,000 MWd/MThm. The MOX centerline temperatures were benchmarked with data from the French proprietary programs. The COPERNIC predictions agree well with these data.

- The numerous MOX benchmarking data points from hot cell examination of more than 50 commercial fuel rods with a maximum burnup of 53,000 MWd/MThm agreed well with the COPERNIC predictions for fission gas release, rod growth, internal pressure and free volume.

- Corrosion thickness was measured on more than 6000 rods representing all types of fuel.

Data from these programs have been submitted to the NRC in a proprietary topical report addendum to the COPERNIC topical (Reference 6).

6.3.2 Core Physics - CASMO-4/SIMULATE-3 MOX

The major NRC approved nuclear design codes to be used in the development of core loading patterns and in the confirmation of licensing basis assumptions for reload cores containing MOX fuel are CASMO-4 and SIMULATE-3 MOX (Reference 7).

CASMO-4 is a multi-group, two-dimensional transport theory computer program used to calculate two-group cross sections, group constants, discontinuity factors, fission product data, reaction rates and pin power data. CASMO has been approved by the NRC for use on UO_2 fuel. CASMO-4 is used by many utilities, but is not presently being used by Duke Power.

SIMULATE-3 MOX is an advanced two-group three-dimensional nodal code that is based on the QPANDA neutronic model which employs either an exact analytic, or polynomial representation of the intranodal flux distribution in both energy groups. It is a version of Studsvik's core simulator that was developed specifically for MOX fuel applications.

These two codes have been benchmarked against critical experiments encompassing fissile plutonium concentrations that bound the fissile plutonium concentrations the mission reactors will use. A topical report documenting the applicability of CASMO-4 and SIMULATE-3MOX to model LEU and partial MOX fueled cores will be submitted for NRC review and approval.

In order to provide additional confidence in the core physics predictions, FRA-ANP (US) will perform calculations in parallel with those of Duke Power using the SCIENCE code package. This suite of reactor physics codes has been developed by FRA-ANP (Fr) and is currently being used in Europe for core design of both UO_2 and MOX fuel cores. The NRC has approved SCIENCE for application by FRA-ANP (US) to UO_2 cores (Reference 8). Approval of SCIENCE for MOX fuel applications is not currently considered necessary since the code package will be used to perform parallel calculations to the independent calculations performed by Duke Power with NRC approved codes. Approval of SCIENCE for MOX applications may be requested for use in supporting future mission reactors, if needed.

Duke Power will demonstrate the acceptability of the nuclear analysis codes for MOX fuel analyses through the types of benchmark calculations

shown in Figure 6-2. Additionally, benchmark calculations will be performed against reference analytical calculations to assess code fidelity. Hypothetical core configurations representing the intersection of four LEU and MOX fuel assemblies will be evaluated by performing reference lattice physics code calculations to produce a reference solution. SIMULATE-3 MOX calculations will be compared against the reference solutions to ensure that the effects of the large thermal flux gradient at the UO_2/MOX fuel assembly interface are accurately accounted for in the generation of group constants and in the calculation of the global and local power distributions.

Data from critical experiments will be used to develop pin power distribution uncertainty factors and any code reactivity bias applicable to MOX fuel. Duke Power will benchmark the CASMO-4 and SIMULATE-3 MOX codes against the proprietary EPICURE, ERASME, and nonproprietary Saxton criticality experiments (Table 6-2) that are applicable to the Mark-BW/MOX1. Summaries of these calculations will be provided to the NRC for review in accordance with the submittal schedules shown in Section 4.2. These criticality experiments are important for code qualification because they contain core configurations with high fissile plutonium concentration MOX fuel. A wide range of fuel types, concentrations, moderator-to-fuel ratios, and cell types are encompassed by these experiments. Therefore, they are considered to be sufficiently representative and applicable to the MOX fuel design, WG plutonium isotopics, and the plutonium concentrations that Duke Power will irradiate.

Duke Power will demonstrate the accuracy of the reactor physics codes to predict global power distributions, reactivity, and physics parameters through benchmark calculations performed against zero power physics test data and core operating data for six partial MOX fuel cycles at the EDF St. Laurent B1 PWR. These calculations will encompass comparisons against the following measured parameters:

<u>Beginning of Cycle (BOC) Hot Zero Power Physics Tests</u>

- All rods out critical boron concentrations
- Individual control rod bank worths
- All rods out isothermal temperature coefficients

<u>Hot Full Power (throughout cycles)</u>

- Critical boron concentrations
- Core power distributions

The above approach involves thorough cross-checking and benchmarking with widely used computer codes that have been applied to a broad range

of reactor applications. The comparisons to criticality experiments and European partial MOX fuel core operating cycles will confirm the technical accuracy of the modeling methodologies and computer programs.

6.3.3 LOCA - Evaluation Model

The NRC approved FRA-ANP (US) LOCA evaluation model (EM) comprises a suite of codes and methods that have been approved for licensing analysis of the mission reactors (Reference 9). For MOX fuel implementation, the EM and its associated codes will be modified and submitted to the NRC for review and approval. The specific models to be evaluated for MOX application include the decay heat model and fuel rod model. It is expected that the use of the existing decay heat model will be justified for MOX fuel. The RELAP fuel pin gap conductivity model, currently based on the TACO code, will be modified to facilitate initialization with the MOX gap model used in COPERNIC. Also, the use of multiple MOX concentrations within the assembly, and the differing types of fuel in the core necessitates that a core model be developed capable of analyzing the core with different fuel types. These changes and appropriate impact evaluations will be performed for lead assembly operation as a subset of the batch implementation analyses.

6.3.4 Mechanical/Thermal-Hydraulic

The Mark-BW/MOX1 design contains no changes to the fuel rod outside diameter, fuel assembly structure, spacer grids, guide thimble, upper nozzle, lower nozzle, or any component or material other than the fuel rod internals. Thermal-hydraulic analyses, including CHF performance and CHF correlations, are not affected by the change to the rod internals. Thus, no modifications to analytical tools are required in the fuel assembly mechanical analysis and thermal-hydraulic areas to accommodate MOX fuel pellets.

Figure 6-1 MOX Fission Gas Release

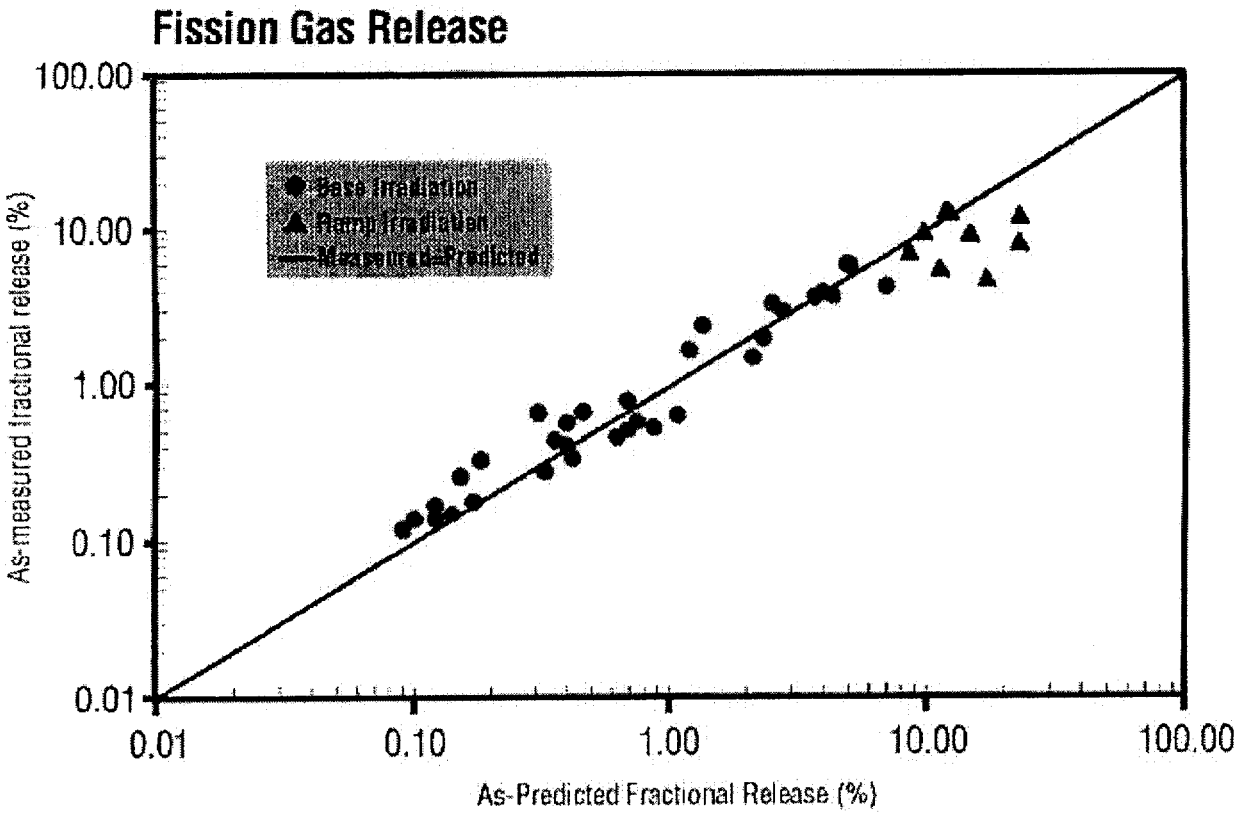

Figure 6-2 Nuclear Code Benchmarks

Nuclear Code Benchmarks

- Reference analytical MOX calculations
- Criticality experiments
- Partial MOX core operating data

Results

- Determination
  - Pin power distribution uncertainty
  - Global power distribution uncertainty
  - Reactivity and physical parameter uncertainty

Table 6-1 Mark-BW/MOX1 Design Summary

Parameter	Advanced Mark-BW Value	Mark-BW/MOX1 Value
Pellets		
Fuel Pellet Material	Enriched UO_2	PuO_2 and Depleted UO_2
Fuel Pellet Diameter, in.	0.3225	0.3225
Fuel Pellet Theoretical Density, %T.D.	96	95
Fuel Pellet Volume Reduction due to Chamfer and Dish, %	1.24	1.11
Rods		
Fuel Rod Length, in.	152.16	152.40
Fuel Rod Cladding Material	M5™	M5™
Fuel Rod Inside Diameter, in.	0.329	0.329
Fuel Rod Outside Diameter, in.	0.374	0.374
Active Fuel Stack Height, in.	144	144
Maximum Fuel Rod Burnup, MWd/MThm	60,000	50,000
Assemblies		
Fuel Assembly Length, in.	159.8	159.8
Lattice Geometry	17x17	17x17
Fuel Rod Pitch, in.	0.496	0.496
Number of Fuel Rods per Assembly	264	264
Heavy Metal Loading per Assembly, kg	466.1	462.8
Number of Grids		
Bottom End	1	1
Vaneless Intermediate	1	1
Vaned Intermediate	5	5
Mid-Span Mixing	3	3
Top End	1	1

Table 6-2 MOX Fuel Criticality Experiments

Name	Lattice	Plutonium Concentration	Isotopic Contents	Mod. to Fuel Vol. Ratio	No. of Config./Acc. Of Measurement
CEA/ EPICURE	SQUARE Density: 10.35 Fuel Diameter: 0.82 Clad Material: Zr4 Outer Diameter: 0.95 Pitch: 1.260	Uniform lattice of 7.0% PuO_2 in 0.25% UO_2, and multi-region lattice of 4.3%, 7.0% and 8.7% $Pu0_2$ in 0.25% UO_2	Pu 238: 1.4% Pu 239: 57.8% Pu 240: 24.55% Pu 241: 9.67% Pu 242: 5.33% Am 241: 1.25%	1.2 - 1.4	59 Axial and Radial B2: 1% to 2% (2σ) Flux Distribution 1% to 2% (1σ)
CEA/ ERASME L	SQUARE Density: 10.496 Fuel Diameter: 0.79 Clad Material: SS304 Outer Diameter: 0.84 Pitch: 1.260	11% $Pu0_2$ in 0.25% UO_2	Pu 238: 1.17% Pu 239: 67.98% Pu 240: 18.59% Pu 241: 7.37% Pu 242: 2.66% Am 241: 2.23%	2.1	3 Axial and Radial B2: 1.5% to 2% (2σ) Flux Distribution 2% (1σ)
Saxton	SQUARE Density: 10.77 Fuel Diameter: 0.857 Clad Material: Zr4 Outer Diameter: 0.993 Pitch: 1.321 1.422 1.867 2.012 2.641	6.6% $Pu0_2$ in natural $U0_2$	Pu 238: 0% Pu 239: 90.49% Pu 240: 8.57% Pu 241: 0.89% Pu 242: 0.04%	(1) : 1.683 (2) : 2.163 (3) : 4.700 (4) : 5.675 (5) : 10.75	5 Total B2: 1% to 2% (2σ)

7. CORE PERFORMANCE AND SAFETY EVALUATIONS

Having completed the design of the fuel rod and fuel assembly for MOX applications, and the modification and verification of analysis tools, the performance and safety evaluation of the MOX cores is the next step in the Fuel Qualification Process. This section presents the analyses that will be performed for the MOX cores, including the cores supporting the lead assembly irradiation (Section 8.0), and the experience base supporting these analyses.

The European operational experience includes MOX fuel assemblies that have been operated by EDF and other European utilities under a variety of fuel management schemes and operating conditions. The operating schemes include 1/3 MOX fuel core, 1/4 MOX fuel core, hybrid refueling (where UO_2 assemblies are used for four annual cycles while MOX assemblies are used for three), annual cycles, and 18-month cycle designs. The MOX fuel assemblies have been discharged with assembly average burnups as high as 55,000 MWd/MThm. In addition, average linear power levels of 5.43 to 6.28 kW/ft and core exit coolant temperatures from 610°F to 619°F have been experienced. These conditions envelop those of the mission reactors. In addition, the methodologies to be described in the FRA-ANP (US) and utility topical reports are either currently approved methods, extensions of currently approved methods, or methods that have already been submitted for NRC review and approval. These similarities will greatly assist in providing the NRC with assurance that the analytical methodologies adequately model MOX fuel behavior, although the adequacy of methods is directly addressed by the physics code certification plan discussed in section 6.3.2.

The results of these analyses will be provided to the NRC as part of the approval process as described in Section 7.4, NRC Interactions. In the course of performing these analyses specific regulatory issues will be addressed, including issues that have been identified and discussed in the public forum. The plan to address these issues is presented in Section 7.5, Technical Issues.

7.1 Performance/Safety Evaluation

7.1.1 Core Design

The lead assembly neutronic design will use the same three-zone plutonium distribution that is planned for batch implementation (with the average plutonium content adjusted as necessary) as shown in Figure 7-1. This scheme optimizes the trade-off between core management and production efficiency for batch implementation, and is the same approach developed by the MOX fuel partners: FRA-ANP (Fr), COGEMA, and EDF. Calculations of the lead assembly neutronics will model these assemblies explicitly, using two independent sets of reactor physics codes, as discussed in section 6.3.2, to provide accurate power predictions during each cycle of operation.

In addition to the code qualification plan discussed in section 6.3.2, the insertion and operation of the lead assemblies in McGuire Unit 2 will provide information to demonstrate the adequacy of the modeling methodologies via startup physics tests and routine flux maps. At least one of the lead assemblies will be located in an instrumented location to verify predicted operational neutronic performance during the irradiation cycles. The assemblies will be located in a relatively high power, but non-limiting core region to ensure representative operating parameters for full-scale operation.

Reload design impacts from using MOX fuel result from changes in key physics parameters which affect certain plant characteristics during normal operations and plant responses to postulated transients and accidents. Changes to key physics and other related parameters are discussed in the following sections.

7.1.1.1 Soluble Boron Concentrations

The harder neutron spectrum and reduced thermal neutron flux associated with MOX fuel decreases the efficiency of thermal neutron absorbers, and therefore significantly increases the beginning of cycle (BOC) soluble boron requirements for partial MOX cores above the corresponding values for LEU cores. Higher soluble boron requirements are seen for both normal operation and postulated accidents. The loss of coolant accident (LOCA) is most affected by high boron concentrations, because the licensee must demonstrate long term subcriticality in the reactor core at cold conditions, with no credit taken for control rod insertion. Because of reactor coolant system chemistry considerations, sampling ability, and boron precipitation concerns, there is a practical upper limit to BOC boron concentrations. The use of additional burnable poisons (BPs), and/or the use of enriched soluble boron can reduce the boron concentration requirements to more manageable levels. However, the use of additional BPs results in an economic penalty due to the residual boron at end of cycle. The use of isotopically enriched boron to 25% or more B^{10} adds cost because it is more expensive than natural boron, but seven PWRs in Europe have switched to operation with enriched boron, including six PWRs that use MOX fuel. Based on anticipated MOX fuel loadings of approximately 40% of the core, Duke Power plans to use enriched soluble boron to offset the increased boron requirements associated with partial MOX fuel core designs.

7.1.1.2 Control Rod Worth

The control rod worths of partial MOX fuel cores are lower than the control rod worths of LEU cores as a result of the harder neutron spectrum and reduced thermal neutron flux associated with MOX fuel. Because of the reduced control rod worth, demonstrating that adequate shutdown margin (SDM) exists must be addressed when designing partial MOX fuel cores. At the proposed mission reactors, McGuire Unit 1 currently uses silver-indium-cadmium (Ag-In-Cd) control rods, while McGuire Unit 2 and both Catawba units use hybrid boron-carbide control rods (B_4C rod with a 40" Ag-In-Cd tip). Duke Power has calculated the available SDM for the mission reactors for both full LEU cores and for equilibrium cycle partial MOX cores. These analyses show that the hybrid B_4C design is more efficient, resulting in approximately 200 pcm more SDM relative to the full-length Ag-In-Cd design. Even so, for the evaluated partial MOX fuel core designs the SDM at McGuire Unit 1 exceeds the current minimum SDM requirement. Therefore, replacement of the Ag-In-Cd control rods at McGuire Unit 1 with hybrid B_4C control rods is not currently planned but could be performed if future partial MOX fuel core designs indicate the need for additional SDM.

7.1.1.3 Cross Sections

Duke will make maximum use of the extensive European MOX fuel experience and database to justify the adequacy of PuO_2 properties and nuclear cross sections.

7.1.1.4 Delayed Neutron Fraction and Prompt Neutron Lifetime

Partial MOX fuel cores have a somewhat lower delayed neutron fraction (β_{eff}) and smaller prompt neutron lifetime than LEU cores. This difference in β_{eff} and in lifetime are most pronounced at beginning of cycle (BOC). For a given reactivity insertion, this results in an increase in the peak core power. Because of the large reactivity insertions associated with the rod ejection event, Duke Power used its three-dimensional kinetics code SIMULATE-3k to explicitly analyze rod ejection accidents in representative McGuire/Catawba partial MOX fuel cores. These calculations demonstrated that the peak core power response for a partial MOX core can be maintained at or below the predicted peak core power response for the comparable LEU case by crediting the compensating lower control rod worths and more negative Doppler temperature coefficient associated with partial MOX fuel cores.

In order to ensure smooth and safe operations, Duke Power will also (1) update simulators with MOX fuel core reactivity characteristics, (2) train the plant operators in normal operations and off-normal situations, and (3) adjust plant control and protection setpoints, as necessary.

7.1.1.5 Reactivity Coefficients

The predicted moderator temperature coefficients (MTCs) and Doppler coefficients for the partial MOX fuel cores in the mission reactors are more negative than the reference LEU fuel core cases. These differences have the potential to exacerbate the plant responses to overcooling events. The steam line break accident is the most severe overcooling event for partial MOX fuel cores because of (1) the high peaking factors associated with this accident, (2) the potential for the preferential redistribution of power to MOX or LEU fuel assemblies, and (3) the reduced differential boron worth in partial MOX fuel cores which reduces the effectiveness of injected boron. However, end of cycle (EOC) conditions are typically bounding for overcooling events, and the EOC MTCs and Doppler coefficients are only slightly different from the corresponding reactivity coefficients for all-LEU fuel cores. Therefore, the EOC SLB accident response for partial MOX fuel cores is not appreciably different from that of a LEU core.

7.1.1.6 Vessel Fluence

The use of MOX fuel may result in an increase in fast fluence to the reactor vessel. However, the assemblies on the core periphery are those that contribute the major portion of vessel fluence. So, the placement of MOX assemblies within the core can be used to mitigate the extent of increase in fluence to the vessel, if any. The impact of MOX fuel on fluence will be evaluated, and it will be demonstrated that all acceptance criteria are met. If necessary, the fuel management schemes will be modified to maintain fluence at acceptable levels.

7.1.1.7 Decay Heat

The decay heat from MOX fuel differs from that of uranium fuel due to the different fission product inventories. Different post-trip decay heat will affect undercooling events such as loss of feedwater and LOCA. FRA-ANP (US) plans to utilize ORNL's ORIGEN-S computer program to quantify the decay heat power from WG MOX fuel. FRA-ANP (Fr) has used ORIGEN-S in the calculation of isotopic inventories and decay heat for both UO_2 and

MOX fuel. Extensive benchmarks of fuel isotopics were performed against destructive examinations of fuel samples of various compositions, burnups, power histories, and decay times. Additionally, comparisons of ORIGEN-S decay heat and isotopic predictions were made with the French APOLLO/PEPIN codes (UO_2 and MOX), ORIGEN2 (UO_2), and ANSI/ANS 5.1/1994 (UO_2 decay heat) for benchmark problems. FRA-ANP (US) plans to take advantage of this work in order to perform its own certification of ORIGEN-S for these purposes. The impact of decay heat differences will be assessed for its effect on transient and accident analyses. The Loss-of-Coolant Accident evaluation model will be adjusted if required, and NRC approval will be requested for application to MOX fuel. As necessary, plant systems will be reviewed to verify that they are capable of handling MOX decay heat loads.

7.1.1.8 Xenon Worth

The harder neutron spectrum and reduced thermal neutron flux associated with MOX fuel decreases the xenon worth. The reduced xenon worth and higher power coefficients will make the core more stable against xenon induced oscillations, and make the axial xenon transient less pronounced.

7.1.1.9 Burnable Poison Rod Assembly (BPRA)

Pressurized water reactors have a need for beginning of cycle (BOC) reactivity holddown. Soluble boron, a neutron absorber, in the reactor coolant system is used to compensate for the initial excess reactivity of the fresh fuel in the core. As the fuel depletes and becomes less reactive, the boron concentration is reduced to maintain criticality. For longer cycles, such as 18-month fuel cycles, the initial excess reactivity of the core is larger, and more reactivity holddown is required. Due to limits on the amount of soluble boron allowed in the reactor coolant system, burnable absorbers are utilized as an alternate means of providing reactivity holddown.

In addition to reducing the BOC soluble boron concentration required for normal and post-accident reactivity control, burnable absorbers are also used to reduce power peaking in high reactivity fresh fuel assemblies, allowing for more economical core designs. Ideally, the BPRAs will be used up during the cycle, minimizing parasitic neutron absorption at the end of cycle when reactivity holddown and reduced power peaking are no longer needed.

Reducing parasitic absorption is important in achieving efficient core designs with lower enrichments and reduced feed batch sizes.

Typical burnable absorbers in use today include: (1) poison material such as erbium or gadolinium integrated within the fuel pellets, (2) zirconium diboride coating on the outside of the fuel pellets (integral fixed burnable absorber or IFBA), or (3) BPRAs containing boron carbide/aluminum oxide mixture pellets loaded into tubes and placed in the control rod guide thimbles of fresh assemblies. The DOE has required that the MOX fuel project not incorporate poison material inside or coated onto the MOX pellets. Therefore, BPRAs are the only feasible option of these three means of reactivity holddown. The baseline BPRA design for MOX fuel assemblies is the FRA-ANP (US) design that provides for varying both the boron content of the burnable poison (BP) rods and the number of BP rods per BPRA for optimum reactivity and power distribution control. See Appendix A for a complete description of the FRA-ANP (US) BPRA design.

The European MOX experience base does not include the use of BPRAs due to the reduced need for additional reactivity holddown in the shorter annual cycles. However, the use of BPRAs with MOX fuel does not present any particular difficulty. Discrete burnable absorber rods have been used extensively in LEU fuel at Duke Power and other U.S. utilities. All of the McGuire and Catawba's forty-six (46) fuel cycles have operated using discrete boron-containing burnable absorber rods. Twenty-three (23) fuel cycles at McGuire and Catawba have utilized the FRA-ANP discrete burnable absorber rods, identical to those used in the Mission Reactor Irradiation Plan.

The ability to predict the depletion and reactivity worth of boron is demonstrated by the ability to predict the critical boron concentration in the reactor coolant system. The behavior of boron is very predictable because it is a 1/v absorber (neutron absorption cross section is inversely proportional to the speed of the incident neutron), and no absorbing isotopes are formed as a result of neutron capture in boron. Furthermore, the validation of the nuclear analysis codes will include benchmarks of cases in the Saxton, ERASME, and EPICURE critical experiments that have poison rods (control rods) in the MOX fuel array. These cases include one Saxton and one EPICURE case with B_4C rods. The results of these benchmarks will be documented in a topical submittal to the NRC (Section 7.4.3) in accordance with the schedule shown in Section 4.2. These benchmarks will

demonstrate the ability of the analytical codes to accurately predict pin power distributions in the presence of absorber rods.

7.1.2 Fuel Rod Performance Analyses

FRA-ANP (US) will perform analyses of the fuel rod thermal performance to establish design and operating limits for the mission reactors. Internal pin pressure considerations will establish allowable burnup and power levels. The heat rate-to-melt will be evaluated using the MOX models in COPERNIC to reflect the slight reduction in thermal conductivity and melting temperature of the MOX fuel. These design and operating limits will be transmitted to Duke Power through the Design Interface Document.

Preliminary mechanical and thermal analyses on the fuel rod design have been completed using preliminary fuel cycle information provided by Duke Power. Also, it should be noted that the COPERNIC code used for the evaluation has not yet been approved by the NRC. Therefore, the results of the analyses, and details of the rod design, are subject to change when the code and inputs are finalized.

This preliminary design is presented in Table 6-1, with a comparison to the Advanced Mark-BW (UO_2 design). The following preliminary analyses have been performed.

- Cladding Stress
- Cladding Fatigue Life
- Cladding Creep Collapse
- Cladding Transient Strain
- Cladding Oxide Thickness
- Fuel Rod End-of-Life Pin Pressure
- Fuel Heat Rate-to-Melt

Mechanical analysis of the Mark-BW/MOX1 fuel rod predicted acceptable margins for the cladding stress and the cladding fatigue life. In each analysis, worst-case dimensions were assumed along with a maximum end-of-life oxide layer (assumed to reduce the load bearing thickness of the cladding). Acceptable margins, comparable to UO_2 fuel, were found for cladding stress between the maximum predicted stress and the allowable stress that is based on two-thirds of the minimum unirradiated yield strength.

The predicted fatigue utilization factor for the fuel rod was less than the 0.9 limit for a lifetime that will exceed the fuel rod's design life. COPERNIC was used to predict the effects of operational transients on

cladding temperatures, pellet diameter and rod internal pressures in the fatigue calculations.

No cladding creep collapse was predicted to occur within a burnup of 60,000 MWd/MThm using the NRC-approved CROV code, which models the change in the cladding ovality over time. COPERNIC provides cladding temperatures and rod internal pressures that are subsequently input into CROV. Worst-case cladding initial ovality and pellet axial gaps are assumed in the analysis.

Cladding transient strain was also predicted using COPERNIC. Transient axial flux shapes were imposed at 10,000 MWd/MThm intervals starting at 20,000 MWd/MThm. The LHR that caused the pellet to swell and strain the cladding 1% established the LHR limit in each case. The results are comparable to UO_2 fuel.

Given that the cladding material is M5™, the MK-BW/MOX1 rod assembly will not approach the 100 micrometer oxide thickness limit. COPERNIC predicted an end-of-life oxide thickness of less than 30 micrometers for the rod at a burnup of 50,000 MWd/MThm.

For the evaluation of internal rod pressure, a power history envelope was developed based on Duke's projected LTA peak pin power history and is expected to be representative of bounding envelopes for future partial-MOX fuel cycle designs. These analyses indicate that the rod design presented in Table 6-1 meets the fuel rod internal pressure criterion.

7.1.3 Thermal-Hydraulic Analyses

Duke Power will perform thermal analyses for cores containing the lead assemblies with the VIPRE code, which has been approved by the NRC. The Mark-BW/MOX1 fuel assembly is designed to be hydraulically compatible with the resident fuel that will be in core when the lead assemblies are introduced. Mid-span mixing grids (MSMGs) are used in the lead assemblies to closely match the thermal-hydraulic performance of the resident 17x17 fuel that utilizes intermediate flow mixing grids, a similar component.

7.1.3.1 CHF Correlations

Two licensed critical heat flux (CHF) correlations, BWCMV-A (Reference 10) and BWU-Z (Reference 11), are available for supporting the irradiation of the Mark-BW/MOX1 lead assemblies in McGuire 2 and subsequent batch irradiation in the mission reactors. Since the Mark-BW/MOX1 design is identical to the Mark-BW in terms of dimensions and materials affecting the

thermal analyses, these correlations will remain applicable to the MOX evaluations.

7.1.3.2 Thermal Evaluation

Thermal margin design calculations are performed to ensure that the minimum departure from nucleate boiling ratio (DNBR) provides margin to for all steady-state core conditions or transients of moderate frequency allowed by the Reactor Protection System (RPS). Duke Power will use the VIPRE computer code in conjunction with their Statistical Core Design technique to assess thermal margin.

7.1.3.3 Statistical Core Design

Statistical Core Design (SCD) uses a statistical combination of uncertainties technique. In the SCD method, input uncertainties are analyzed using statistical methods and an overall DNBR uncertainty is determined. This overall uncertainty is then used to establish a design limit DNBR known as the Statistical Design Limit (SDL).

Once the SDL has been established, the calculated DNBR at a specific core state is compared to the SDL to demonstrate that the DNB protection criterion is met. Duke Power's SCD methodology for both B&W and Westinghouse-designed reactors (Reference 12) has been approved by the NRC.

7.1.3.4 Hydraulic Compatibility

The Mark-BW/MOX1 is designed to be hydraulically compatible with the resident fuel that will be in core when the lead assemblies are introduced. Mid-span mixing grids are used in the lead assemblies to closely match the pressure-drop distribution of the surrounding fuel that uses intermediate flow mixing grids, a similar component. Core hydraulic analyses will be performed by FRA-ANP (US) to model the lead assemblies explicitly to develop predictions of core axial flow distributions, pressure drop, and to predict crossflow conditions between the lead assemblies and the surrounding assemblies. Since lead assembly pressure drop will not vary significantly from that of the surrounding fuel, these analyses will confirm that inter-assembly flow rates, fuel assembly lift force and core pressure drop are all well within established limits.

7.1.3.5 Core Pressure Drop

The unrecoverable core pressure drop includes pressure drops across the lower support plate, fuel assemblies, control components and upper core support plate. The unrecoverable core pressure drop will be determined by FRA-ANP (US) for a full Mark-BW/MOX1 lead assembly core and compared to that of a full core of resident fuel. The mixed core configuration is bracketed by the full core configurations of each fuel design.

7.1.3.6 Fuel Assembly Lift

Fuel assembly hydraulic lift force will be determined by FRA-ANP (US) for two bounding core configurations. The limiting mixed core configurations are the lead assembly core configuration for the third irradiation cycle (one Mark-BW/MOX1 assembly in a core of resident fuel), and the maximum MOX core loading (for this analysis a conservative assumption of 50% MOX assemblies will be made).

Hydraulic lift forces (lift force minus buoyant weight) will be determined at both isothermal and 'at power' conditions; analyses will be performed for core flowrates at both the Mechanical Design and the Pump Overspeed ('at power' only) conditions. The net hydraulic lift force will be compared against the available holddown force at these conditions demonstrating the margin to prevent fuel assembly lift.

7.1.3.7 Inter-Assembly Crossflow Velocity

Mixed core analyses with a single lead assembly in a core of resident Westinghouse assemblies will be used by FRA-ANP (US) to determine span average crossflows. The hydraulic similarity of the two fuel designs assures the crossflow velocity will be well below established limits.

7.1.4 Mechanical Analysis

The lead assemblies and fuel rods will be evaluated by FRA-ANP (US) for mechanical performance based on NRC approved methods. The assembly analyses will be the same as those performed for the Mark-BW/X1 design (the advanced Mark-BW design operating as lead assemblies in North Anna). The fuel rod analysis will follow the previously approved methods except that the fuel performance code COPERNIC with MOX specific models will be used to provide pressures, oxide thickness and strains used in mechanical analyses.

Specific fuel rod mechanical analyses to be performed include:

1) Fuel rod axial growth and shoulder gap closure
2) Fuel rod shipping and handling
3) Cladding corrosion
4) Cladding stress
5) Cladding fatigue

The specific mechanical analyses to be performed on the fuel assembly include:

1) Fuel assembly growth
2) Fuel assembly structural corrosion
3) Fuel assembly normal operation stresses
4) Fuel assembly normal operation fatigue
5) Fuel assembly LOCA/Seismic stresses
6) Fuel assembly shipping and handling

A summary of the methods, criteria and results of these analyses will be presented in the lead assembly design report.

7.1.5 LOCA Analysis

LOCA analyses will be performed by FRA-ANP (US) for the MOX fuel assemblies. The work effort will include:

- Definition, development, implementation, testing, and NRC approval of methods necessary for the analysis of MOX fuel
- Analysis of the lead assemblies to support insertion into McGuire Unit 2, Cycle 16

The initial work will define the LOCA evaluation model (EM) and plant model changes required for analyzing and licensing MOX fuel. The fuel rod and decay heat models are the primary areas for development work and modification. During this phase, the experience of FRA-ANP (Fr) in analyzing MOX fuel for use in commercial reactors will be utilized. FRA-ANP (Fr) will provide any supporting data necessary for EM approval by the NRC. Duke Power will supply the inputs necessary for the modeling of McGuire Unit 2 resident fuel.

The MOX fuel lead assemblies will be mixed with a core of resident 17x17 fuel having similar hydraulic characteristics. The lead assemblies will be located in a high powered, but non-limiting, core region and analyzed as a hot assembly. Large break LOCA calculations will be performed for the MOX fuel lead assemblies. Mixed core, coolable geometry, long-term cooling, and small break LOCA analyses will be evaluated. No impact on the results of these analyses from the MOX fuel

is expected; the existing licensing basis calculations will be justified as applicable to the licensing of the MOX lead assemblies.

7.1.6 Non-LOCA Safety Analysis

Duke Power will perform the non-LOCA safety analyses to support batch implementation of the Mark-BW/MOX1 in the mission reactors. Duke will submit analyses for NRC review and approval documenting the evaluation of the limiting transients.

For the lead assembly irradiation in McGuire 2, Duke Power will perform the necessary safety analysis evaluations. However, the core response to limiting transients will not be affected by the presence of the Mark-BW/MOX1 lead assemblies. Duke Power will document these safety analysis evaluations as part of the overall reload analysis.

7.2 Domestic Experience

7.2.1 MOX Experience

Prior to the U.S. policy decision in 1977 to defer indefinitely the commercial reprocessing and recycling of plutonium there were a number of developmental programs completed that demonstrated the technical feasibility of MOX fuel. However, only minimal PWR demonstration irradiations were completed, and no batch experience was obtained. Thus, the U.S. experience with MOX fuel is limited relative to the data available from Europe. Details of the U.S. MOX programs are provided in Appendix B.

7.2.2 UO_2 Experience

Through FRA-ANP (US) and Duke Power, the DCS team has amassed extensive experience in the design, fabrication and operation of UO_2 fuel. This experience provides assurance that the team has the resources, knowledge, technical capability, and commitment to complete the fuel qualification effort detailed in this plan.

7.2.2.1 Design and Fabrication Experience

FRA-ANP (US) has 27 years of successful design and fabrication experience of nuclear fuel for PWR's. Nuclear fuel assemblies were first delivered to Duke Power's Oconee Nuclear Station in 1971; to date FRA-ANP (US) has supplied nearly 10,000 fuel assemblies for PWR's.

For the mission reactor design (Westinghouse designed reactors), FRA-ANP (US) began delivery of fuel assemblies in 1987 to Duke Power Company's McGuire Nuclear Station. Currently, FRA-ANP (US) fuel is operating in the U.S. in seven Westinghouse-designed 17x17 reactors: Duke Power's Catawba Units 1 and 2, McGuire Units 1 and 2; Virginia Power's North Anna Unit 1 (lead test assemblies); and TVA's Sequoyah Units 1 and 2. An eighth plant, Portland General Electric's Trojan Plant, also operated with FRA-ANP (US) fuel. As of August 1999, FRA-ANP (US) has supplied nearly 2,500 fuel assemblies to the 17x17 reactors, most of which were supplied to the mission reactors (McGuire and Catawba). Combined with the 17x17 fuel experience of FRA-ANP (US)'s parent companies, FRA-ANP (Fr) and COGEMA, a total of 40,000 fuel assemblies have been successfully designed, licensed and operated in reactors similar to the mission reactors around the world. Of particular significance, FRA-ANP (US) fuel has operated in all four of the mission reactors. The burnup experience of the FRA-ANP (US) Mark-BW fuel design is shown in Figure 7-2 to envelop the expected MOX fuel burnups.

FRA-ANP (US) will provide the fuel design experience for the mission reactor fuel; FRA-ANP (US) has an established fuel assembly, fuel rod and fuel component design experience base that will be applied to the MOX fuel. This experience ranges from the evolutionary revisions of long established fuel designs, such as the Mark-B fuel products, to the establishment of new fuel designs, such as the Mark-BW and Mark-B11, which were designed in response to the challenges of a competitive nuclear fuel market. The lead assembly programs used by FRA-ANP (US) to demonstrate design upgrades are detailed in Table 7-1.

7.2.2.2 Related Services Experience

The FRA-ANP (US) fuel-related products and services include control rod assemblies, incore detectors, and burnable poison rod assemblies. Full-scope engineering services cover the full spectrum of fuel-related and reactor system analyses. Comprehensive field services include fuel inspection and repair, control rod examinations, and post irradiation examinations. All of these FRA-ANP (US) products and services are directly relevant to the scope of work for the WG plutonium MOX fuel program.

7.2.2.3 Utility Experience

Duke Power performs reactor core design, fuel reload qualification, and safety analyses for their reload cores. This capability differentiates them from more typical utilities that rely upon their fuel vendor to provide these services. In addition, Duke takes part in extensive support and review of fuel design, fuel fabrication, and PIE examinations. The experience of the utility supplements that of FRA-ANP (US) in providing and qualifying reload fuel designs.

7.2.3 Fuel Reliability

Fuel reliability of the Mark-BW/MOX1 design is expected to be consistent with the current Mark-BW reliability, equal to the best in the industry. The Mark-BW design has experienced a failure rate of less than one per 100,000 rods, from all manufacturing related causes, since its inception in 1987. The proven MIMAS-produced MOX reliability, combined with the proven Mark-BW reliability, provides the basis for the expectation that the performance of the Mark-BW/MOX1 will continue at this high level.

7.2.3.1 Response to Known Failure Mechanisms

The Mark-BW design has been improved from its inception to address fuel failures that have occurred during operation of the Mark-BW as well as other designs in the industry. Specific responses to known failure mechanisms include:

a) Debris Fretting

The Mark-BW fuel design experienced four fuel failures, as confirmed by ultrasonic testing, due to fretting from debris in the reactor coolant. In response, FRA-ANP (US) collaborated with FRA-ANP (Fr) to develop the Trapper™, fine mesh filter plate lower nozzle. This design was shown through testing to improve debris filtering to near 100%. Since the inception of the Trapper™ design, there have been no debris fretting failures in the Mark-BW design.

b) Grid Fretting

One failed fuel rod occurred in the Mark-BW design due to grid fretting on a peripheral rod in the lower end grid. FRA-ANP (US) reviewed the design and modified the grid to increase the interference between the rod and the spring (soft stop) thereby making the design more robust in terms of margin for

manufacturing variability, or for accommodating an inadvertent impact from a neighboring assembly during handling. There have no grid fretting failures in the Mark-BW design since the introduction of the design change.

c) Creep Collapse

The Mark-BW design experienced one confirmed failure due to creep collapse. Creep collapse has been virtually eliminated as a failure cause since the inception of pellets with nominal theoretical densities of 95% and above, and stable pellets that have reduced the stack shortening due to densification. The root cause of the Mark-BW creep collapse failure was found to be missing pellets due to manufacturing error. As a result, rod loading processes were modified to eliminate the possibility of a recurrence and X-ray scanning equipment was upgraded to allow detection of unacceptable gaps in the fuel column, including a single missing pellet. There have been no additional creep collapse failures in the Mark-BW design since these improvements were implemented.

d) End Cap Weld

FRA-ANP (US) produces a Mark-B fuel product for the B&W-designed 15x15 plants. Several incidents of unknown fuel failures occurred with the Mark-B design prior to 1995. Extensive investigations produced a finding that defective end cap welds were the likely cause of these failures. As a result, several design and processing improvements were implemented including a real time X-ray system for 100% inspection of every end cap weld. These design and process improvements have also been applied to the Mark-BW design. Since these changes were implemented there have been no Mark-B or Mark-BW failures due to end cap welding.

7.2.3.2 Industry Operating Issues

a) Incomplete Rod Insertion

In early 1996, the NRC issued Bulletin 96-01, which described events concerning incomplete control rod insertion (IRI) in Westinghouse-designed plants and requested that licensees evaluate the concern for applicability to the licensee's situation. FRA-ANP (US) provided a response in 1997 with data that demonstrated that RCCA drop times did not show any adverse trends at higher burnups, and burnups greater than 50,000 MWd/MTU had been achieved with successful rod insertion.

In the fall of 1999, an incident of IRI was observed in FRA-ANP (US)'s Mark-B fuel design at the end of TMI 1 Cycle 12, during post shutdown control rod assembly (CRA) drop time testing. Mark-B fuel is used exclusively in B&W designed 177 Fuel Assembly (FA) Reactors. Through extensive investigation of the incident, the root cause was determined to be excessive guide tube distortion causing the CRA to stop prior to insertion to the limits of the Technical Specifications. Further investigation of the TMI incident and data from other B&W 177 FA reactors, identified a number of factors which, to varying degrees, correlate to the incidence of IRI. These factors include 2-year cycle designs, same quadrant fuel shuffles, and excessive fuel assembly hold down force. Same quadrant fuel shuffles have been minimized or eliminated and FRA-ANP (US) has reduced the fuel assembly hold down force of fuel being delivered and in the field. Further optimization of the Mark-B hold down spring design is underway to lower the compressive loads on the fuel assembly.

None of these underlying causes are applicable to the Mark-BW design as currently operating or as projected to operate, including the application to MOX.

Design improvements for the Mark-BW/MOX1 fuel design as compared to the Mark-B design configuration exhibiting IRI, include: 1) M5™ fuel rods and guide tubes which reduce rod and assembly growth thereby reducing the holddown spring axial load on the assembly; 2) optimization of the holddown spring loads relative to the hydraulic lift to minimize the net axial load on the assembly; and 3) mid-span mixing grids (MSMG) which increase the assembly lateral stiffness and provides additional span support in the upper half of the fuel rod and guide tubes.

Table 7-2 provides a comparison of the estimated net holddown force for the Mark-BW/MOX1 and Mark-B assemblies for BOL and EOL conditions. The values reflect the net holddown force considering nominal conditions and includes spring relaxation due to irradiation. It is shown that the range of expected assembly growth significantly reduces the predicted EOL net holdown force for the Mark-B/MOX1 assembly compared to the Mark-B design, which exhibited IRI.

Figure 7-3 shows the Mark-BW/MOX1 fuel assembly lateral stiffness is approximately two times greater than that of the Mark-B design for beginning-of-life (BOL) and end-of life (EOL) conditions. In addition, the Mark-BW/MOX1 EOL lateral stiffness

remains higher than that of the Mark-B BOL design. Increases in lateral stiffness have been shown to reduce fuel assembly distortion based on design changes implemented by FRA-ANP (Fr).

Design differences between the Mark-BW fuel assembly and the fuel designs experiencing the IRI in Westinghouse-designed plants contribute to the favorable performance of the FRA-ANP (US) fuel for this issue. These Mark-BW design features include: 1) the 'floating grid' structure that produces less mechanical interaction during fuel rod growth, 2) the seated fuel rod design that reduces the compressive stresses in the guide thimbles, 3) optimized spring design for lower compressive loads on the fuel assembly, and 4) larger diameter guide thimbles that provide more clearance for RCCA insertion. These features contribute to less guide thimble distortion, less fuel assembly distortion, and unrestricted RCCA insertion. The Mark-BW/MOX1 will have the same structural design features and characteristics as the Mark-BW that has seen successful RCCA insertions at burnups in excess of 50,000 MWd/MTU. The Mark-BW/MOX1 is not expected to have any concern or restriction on operation due to the IRI issue.

b) Axial Offset Anomaly

The axial offset anomaly (AOA) phenomenon is characterized by a significant negative axial offset deviation from predictions. It has been hypothesized that CRUD deposits on the fuel rods provide a location for boron poison to concentrate. The boron buildup in the higher core elevations, due to the thicker CRUD layers at these elevations, causes a shift in power to the lower region of the core (negative offset). AOA has occurred in 18 fuel cycles in 8 Westinghouse-designed plants and may have occurred at 2 B&W-designed plants. The exact causes are not precisely understood, but the conditions required for occurrence appear to include soluble boron and lithium in the coolant, corrosion products in the coolant, and subcooled boiling at the rod surfaces.
Prevention of AOA appears to be related to close adherence to water chemistry guidelines and reduction in the reactor coolant CRUD inventory.

Duke Power will take the appropriate actions to prevent the occurrence of AOA. Due to the harder neutron spectrum in MOX fuel and the resulting lower boron worth, the Mark-BW/MOX1 fuel design is expected to be less susceptible to AOA than UO_2 fuel. Also, the use of enriched soluble boron in the MOX cores should further reduce the risk of AOA.

c) Distinctive CRUD Pattern

Similar to the AOA phenomenon, a distinctive CRUD pattern (DCP) has occurred at B&W-designed plants. At TMI-1, during cycle 10, nine first burn fuel rods were found to have failures associated with DCP. The DCP was also observed on a number of other fuel rods. Hot cell examinations concluded that the fuel rods failed due to accelerated corrosion associated with abnormally thick CRUD deposits resulting from the cycle 10 water chemistry control. Operating guidelines were adopted to guard against occurrence of DCP, with water chemistry control the key factor.

As in the case for AOA, Duke Power will adhere to water chemistry controls designed to prevent these CRUD related phenomena. The Mark-BW/MOX1 fuel design will provide the same performance as UO_2 fuel for these CRUD related phenomena. The use of M5™ cladding on the Mark-BW/MOX1 provides additional margin for corrosion related failure mechanisms.

7.2.3.3 Continuous Improvement

The Mark-BW has successfully addressed these issues and continues to operate with high reliability. No fuel failures related to the design or manufacturing process have occurred in any Mark-BW fuel manufactured after January 1992. Furthermore, FRA-ANP (US) is committed to the pursuit of zero defect fuel. Fabrication processes and equipment are continually being upgraded to improve fuel performance. When fuel failures occur, they are aggressively investigated to determine root cause and take corrective action. This commitment will apply to the Mark-BW/MOX1 design to ensure that the fuel performance is maintained at the highest level.

7.3 European MOX Experience

Fabrication and irradiation of MOX fuel in Europe represents the largest database for MOX fuel in the world (see Appendix B for U.S. experience and Appendix C for other worldwide experience). Fabrication and operation of MOX fuel in the U.S. will directly benefit from the experience of COGEMA, FRA-ANP (Fr), EDF, and BELGONUCLEAIRE. This experience will provide the data to support benchmarking, verification and licensing of computer codes, as well as the processes for fabrication of the MOX fuel. These data will be submitted to the NRC in support of specific proprietary topical reports.

7.3.1 European Qualification Experience

The European experience directly applicable to the qualification of MOX fuel for the mission reactor irradiation includes a MOX fuel development and qualification program that has been in progress in Europe for 35 years. The first MOX fuel rods were loaded in the PWR test reactor BR3 by BELGONUCLEAIRE in 1963. FRA-ANP (Fr), COGEMA and EDF have carried out a MOX fuel qualification program in France since 1974. The major elements of this French MOX qualification program are shown in Table 7-3.

7.3.2 European Fabrication Experience

The first MOX fuel rods using Zircaloy cladding with MOX fuel produced utilizing the MIMAS process were introduced in the St. Laurent B1 core in 1987. By mid-2000, MOX fuel was operating in 20 EDF commercial reactors, with an additional 8 to be added in the future.

The fabrication of MOX fuel in the U.S. will utilize the same MIMAS process used in Europe. Details of the process are provided in Section 8.3.9. Through the use of the aqueous polishing process, the impurities introduced to the weapons grade MOX will be effectively eliminated, thereby ensuring that the European experience is applicable to the MOX fuel produced in the U.S. from WG plutonium.

The qualification of the U.S. MOX fuel requires the successful transfer of this process to the U.S. facilities and the successful startup of these new facilities. Through COGEMA, DCS has extensive experience in the start-up, qualification, and operation of MOX fuel fabrication facilities. The production of MOX fuel has been qualified in the MELOX, Cadarache, and BELGONUCLEAIRE / P0 manufacturing plants. These three facilities have produced a combined total of more than 435,000 MOX fuel rods for 33 of the 35 commercial nuclear reactor units irradiating MOX fuel in Europe. In addition, the various production runs in these plants led to the development of the MIMAS process which is currently in use at all three of these facilities. A complete listing of all of the European plants using MOX fuel from the MIMAS process is provided in Table 7-4.

DCS will apply this extensive experience in the upgrading and operation of the appropriate DOE facility supporting the fabrication of lead assemblies as well as the MOX Fuel Fabrication Facility.

7.3.3 European Operational Experience

The extensive European operational experience will be used in the fuel qualification effort to benchmark the appropriate core physics analysis

tools, and as an overall demonstration of the maturity of the MOX technology. This experience includes MOX fuel assemblies that have been irradiated by EDF and other European utilities under a variety of fuel management schemes and operating conditions.

The operating schemes include 1/3 MOX fuel core, 1/4 MOX fuel core, hybrid refueling (where UO_2 assemblies are used for four annual cycles while MOX assemblies are used for three); annual cycles; and extended cycle designs. The MOX fuel assemblies have been discharged with assembly average burnups as high as 55,000 MWd/MThm. Average linear power for these plants ranged from 5.43 to 6.28 kW/ft, with core exit temperatures from 610°F to 619°F.

The European experience also includes load follow operation, a more challenging fuel duty than the U.S. plant operational mode. Since 1991, two EDF reactors using MOX fuel have been operating under load follow and frequency control conditions. Based on this successful experience, all of the EDF reactors using MOX fuel have been authorized, since 1995, to operate under load follow conditions.

In the EDF 900 MWt (157 fuel assembly core) plants, up to 16 MOX assemblies are loaded in an equilibrium batch using one-third core reload management. The replacement of UO_2 assemblies by MOX fuel assemblies is done without any penalty on core operating conditions. An extended rod burnup goal of 61,000 MWd/MThm (52,000 MWd/MThm assembly burnup) has been set for 2004 as part of the MOX Parity project, well in advance of the required mission reactor initial core loading in 2007. Furthermore, programs are underway in France to develop MOX designs capable of reaching assembly burnups up to 70,000 MWd/MThm over the next ten years.

In Belgian reactors, two schemes of fuel management are followed:

- Doel Unit 3 uses annual cycles with 1/4 core reloads.
- Tihange Unit 2 uses extended cycles with 1/3 core reloads, similar to the practice at the mission reactors. By the end of the year 2000, a total of 92 fuel assemblies had completed 1-3 cycles of operation, with a maximum fuel assembly discharge burnup of 46,500 MWd/MThm.

The current rod design burnup in France is 48,000 MWd/MThm (43,000 MWd/MThm assembly burnup). In Belgium the average assembly discharge burnup is about 44,000 MWd/MThm at Tihange 2 and 46,500 MWd/MThm at Doel 3. Design assembly burnups as high as 55,000 MWd/MThm are currently proposed in Germany. Thus, the MOX exposure experience in Europe clearly envelops the projected typical maximum assembly burnup for the mission fuel of 45,000 MWd/MThm.

Table 7-5 shows the maximum discharge burnup for the European plants using MOX fuel produced by FRA-ANP (Fr)/COGEMA and by Siemens with the same process to be used on the lead assemblies and Mission Reactor fuel (MIMAS for FRA-ANP (Fr)/COGEMA and OCOM for Siemens).

Use of MOX fuel with M5™ cladding is proceeding in advance of the U.S. application of MOX with M5™ in the mission reactors. The German reactor KKP-2 loaded 16 MOX fuel assemblies with M5™ cladding in 1998; an additional 16 MOX fuel assemblies with M5™ were loaded in 1999. The German reactor GKN-2 loaded 16 MOX fuel assemblies with M5™ cladding in 2000. Current plans for use of M5™ cladding with MOX fuel include 32 fuel assemblies to be delivered to the German reactor KKG and 28 fuel assemblies to GKN-2 in 2001.

Two fuel assemblies with some M5™ cladding MOX fuel rods will be loaded into EDF's Chinon 3 reactor in 2001; the target burnup for this fuel is greater than 55,000 MWd/MThm.

7.3.4 Fuel Reliability Experience

A comparison of the reliability of European MIMAS-produced MOX fuel with that of UO_2 shows very similar operating experience. During the thirteen years that reload quantities of MIMAS-produced MOX fuel rods have been irradiated in commercial reactors, representing over 435,000 operating fuel rods, only six failed rods have been seen in MOX fuel assemblies. None of the failures have been attributed to the use of MOX fuel. Five of the failures are known to be due to debris fretting; one is believed to be due to the same mechanism. Similar failures have been observed in UO_2 fuel assemblies.

The fuel reliability experience with MOX fuel in Europe is expected to be applicable to the U.S. The use of the aqueous polishing process for preparing the WG plutonium will ensure that there are no effects due to contaminants such as gallium. Furthermore, the base fuel design to utilize the MOX pellets (Mark-BW) has reliability as high as any fuel design in operation in the U.S. as detailed in Section 7.2.3. Thus, the reliability of the MOX fuel with WG plutonium is expected to be very high.

7.3.5 European Experimental Data

Performance data for fuel and materials have been obtained from poolside and hot cell examinations. The examinations have concluded that there have been no differences in MOX fuel assembly operational characteristics relative to UO_2 fuel. MOX fuel has been examined poolside after one to four cycles of irradiation. In addition, 55 irradiated

MOX fuel rods have been examined in hot cells. The data from these examinations, combined with a comprehensive out-of-core and in-core analytical test program on the current fuel products, are being used to confirm and upgrade the design models and codes necessary for the continuing improvement of the MOX product. These comprehensive data will be provided to the NRC in support of specific code and model submittals, ensuring an efficient review and approval.

Following are details of specific examinations supporting the overall qualification effort:

7.3.5.1 Hot Cell Examination of the Current MOX Fuel

Fuel rods from the first MOX fuel batch in the St.Laurent B1 reactor were characterized and withdrawn after each of three irradiation cycles. These data included rod burnups up to approximately 43,000 MWd/MThm and three different plutonium concentrations. Fuel rods irradiated for three cycles at St Laurent B2, including load following operation in the last cycle, were also examined. These examinations showed that the MOX fuel rods behaved similarly to UO_2 fuel for both waterside corrosion and rod dimensional effects. Furthermore, the rods operating under load follow conditions behaved similarly to the reference rods operated under base load conditions. Moreover, prototypical MELOX fuel rods (MIMAS process with an ADU/TU2 UO_2 powder) have been examined after 1, 2 and 3 irradiation cycles. Four-cycle fuel rods will be hot cell examined in year 2001. Fractional fission gas release of the 3-cycle fuel rods lies in the lower range of the MIMAS/AUC database.

The data show higher fission gas release for MOX fuel rods relative to UO_2 fuel rods at the same burnup, particularly above 40,000 MWd/MThm. Analysis of the data with the COPERNIC fuel performance code shows that this difference is primarily due to the differences in power production of the rods. Due to differences in the fuel properties the relative power of the MOX rods tends to be higher at high burnup than the relative power of UO_2 rods.

The waterside corrosion result was also confirmed more recently on optimized Zircaloy-4 cladding in high temperature reactors in Germany for a rod average burnup of 49,000 MWd/MThm. For both MOX fuel and UO_2 fuel, the maximum oxide thickness was on the order of 80 microns at this burnup, confirming that MOX fuel performs the same as UO_2 fuel relative to Zircaloy cladding corrosion. Confirmation of the same equivalence for the advanced

cladding (M5™) to be used on the Mission Reactor fuel will be obtained in Germany where M5™ rods containing MOX fuel will achieve a burnup of 55,000 MWd/MThm in 2002. Poolside measurements carried out after two cycles of irradiation in the KKP-2 reactor (rod burnup of 37,500 MWd/MThm) indicated oxide thickness of 16 microns. The measurements after 3 cycles will be performed in 2001.

7.3.5.2 High Burnup Hot Cell Examination

To provide verification of performance and benchmarking data to support higher burnup needs, four-cycle MOX fuel rods with burnups up to 53,000 MWd/MThm have been examined in hot cells. The data did not show any fission gas release enhancement due to the burnup effect. One assembly has completed a fifth irradiation cycle in the Gravelines-4 reactor. Fuel rods up to burnups of 61,000 MWd/MThm will be shipped to the hot cell at the beginning of year 2000, with rod puncture and gas analysis to be performed by mid-2001.

7.3.5.3 Analytical Experiments

Out-of-pile and in-pile experimental tests have been conducted to promote an improved understanding of MOX fuel behavior. These R&D programs conducted by the French partners, or part of international programs, most notably the Halden Reactor Project, have addressed normal and off-normal conditions. The primary areas of research have concerned thermal, fission gas release and mechanical properties.

These data have been used for the development and benchmarking of the models implemented in the COPERNIC thermal/mechanical code.

7.3.5.4 Power Ramp Testing

Ramp testing has established that the performance of MOX fuel rods relative to pellet-cladding interaction (PCI) is equivalent to or better than that of UO_2 fuel. Transient fission gas release from the MOX rods was equivalent to that of UO_2 fuel.

Power ramp tests were performed in the Studsvik experimental reactor in a PWR environment in terms of temperature, power and neutron flux. Short fuel rods were fabricated from segments of irradiated MOX fuel rods from St. Laurent B1. The rods were ramped from typical operational power levels to terminal levels up

to 14.6 kW/ft without cladding failure, demonstrating the excellent performance of MOX fuel for PCI considerations (Reference 13).

These ramp test rods also produced information on transient fission gas release (since the rod did not fail and the gas inventory was retained). The measured fractional release rates of the five tested MOX fuel rods are consistent with the burnup and power, and did not show any unexpected behavior. The current transient fission gas release model for UO_2 contained in the COPERNIC code gives good agreement with the MOX transient gas release data, as shown in Figure 6-1. Other programs with ramp tests in BR2, OSIRIS, and Halden after irradiation in PWR reactors have also confirmed the good behavior of MOX fuel. The ramp test programs carried out in the BR2 reactor are describe in the paper of M. Lippens at the Vienna Symposium on MOX Fuel Cycle Technologies (Reference 14) and references cited herein. The analytical test programs (testing of 2-cycle and 4-cycle MOX fuel rods from EDF/Framatome) at Halden are made or are being made in the framework of the Joint Program (HRP) (Reference 15).

7.3.5.5 Reactivity Insertion Testing

Reactivity insertion tests have been used to determine the enthalpy addition criterion for UO_2 and MOX fuel. Three test series, for reactivity insertion impact on UO_2 and MOX fuel, were performed in the SPERT test program in Idaho, the reactivity insertion accident (RIA) test program in the Nuclear Safety Research Reactor in Japan, and most recently the RIA test series in the Cabri loop in France. The seven low enriched uranium (LEU) and four MOX fuel tests at Cabri included two uranium fuel failures (tests NA-1 and NA-8) and one MOX fuel failure (test NA-7). The Cabri data are still being evaluated and no definitive conclusions have been drawn about any differences between MOX fuel and LEU fuel behavior during RIA.

7.4 NRC Interactions

The overall approach to the fuel qualification effort was presented to the NRC in a public meeting held June 2, 1999. This initial meeting focused on the use of a qualified fuel design supported by extensive European experience and verified through a Lead Assembly Program. The expected NRC interactions and schedule for submittals were presented; the NRC's general concurrence with the requested review schedule was obtained. Further NRC interactions will take place in the form of individual licensing submittals, with meetings supporting these submittals as necessary.

The topical reports to be submitted in support of the fuel qualification effort are listed below with the projected submittal dates. The data to be provided to the NRC in support of each of the submittals is summarized in Table 7-6.

7.4.1 COPERNIC

This fuel performance code is currently under review by the NRC for application to UO_2 and MOX fuels. COPERNIC contains models for MOX as well as UO_2, and has been used for MOX fuel applications in Europe since 1997. A topical report addendum supporting the use of COPERNIC for MOX applications was submitted to the NRC on July 31, 2000.

7.4.2 LOCA Evaluation Model

The NRC approved FRA-ANP (US) LOCA evaluation model (EM) comprises a suite of codes and methods that have been approved for licensing analysis of the mission reactors and other similar reactors. For MOX applications the EM will be modified and a topical report addendum to the EM topical submitted to the NRC in August 2001.

7.4.3 RELAP/MOD2

The RELAP fuel pin gap conductivity model, currently based on the TACO code, will be modified to facilitate initialization with the MOX gap model used in COPERNIC. Also, the use of multiple MOX concentrations within the assembly, and the differing types of fuel in the core necessitates that a core model be developed capable of analyzing the core with different fuel types. The NRC approved RELAP/MOD2 topical will be revised to incorporate these changes and submitted to the NRC in August 2001.

7.4.4. CASMO-4/SIMULATE-3 MOX

Duke Power will use CASMO-4 and SIMULATE-3 MOX with methods that have been approved by the NRC for UO_2 applications. A topical report for CASMO-4 and SIMULATE-3 MOX, demonstrating benchmarks to the European MOX database will be submitted to the NRC by August 2001.

7.4.5 MOX Fuel Design Topical

A MOX fuel design topical report will be prepared and submitted to the NRC in support of the use of MOX fuel in the mission reactors. The MOX Fuel Design Topical will reference an updated revision to the Mark-BW Mechanical Design Topical for the overall assembly design and will

focus on the effect of MOX material properties and operating characteristics on the fuel design. The differences between UO_2 fuel and MOX fuel, and the differences between weapons-grade and reactor grade MOX, will be addressed. The effect of MOX on the fuel rod design will be detailed. The MOX Fuel Design Topical and the revision to the Mark-BW Mechanical Design Topical will be submitted to the NRC by August 2001.

7.4.6 Lead Assemblies

The impact of the lead assemblies on McGuire 2, Cycle 16 will be addressed in an Addendum to the McGuire License Amendment Request to be submitted to the NRC by August 2001. This Addendum will address the mixed core thermal hydraulic impact of operation of McGuire 2, Cycle 16 with Mark-BW/MOX1 lead assemblies. Lead assembly issues relating to the use of MOX will reference the MOX Fuel Design Topical.

7.4.7 Non-LOCA Safety Analysis

Duke Power will submit a topical report related to specific transient analyses affected by the MOX fuel characteristics. This submittal is not required for lead assembly approval, but supports the overall fuel qualification effort. Duke Power will submit the Safety Analysis Methodology for MOX Fuel Cores topical by December 2002.

7.5 Technical Issues

7.5.1 Weapons-Grade Plutonium

The extensive European MOX fuel experience base derives from the use of fuel assemblies with plutonium produced by reprocessing commercial nuclear power reactor fuel. This kind of MOX fuel is typically referred to as RG MOX fuel. RG refers to plutonium with a Pu^{240} concentration in excess of 20%. By contrast, the U.S. MOX fuel program will be based on WG plutonium, with a Pu^{240} concentration of 7% or less. Until relatively recently, virtually all WG plutonium was reserved for nuclear weapons stockpiles, so there has never been any large-scale use of WG MOX fuel in nuclear reactors. However, as noted in Appendix C, some early MOX fuel test programs did use MOX fuel with high fissile plutonium concentrations (e.g., Saxton, Ginna, and San Onofre). In those programs there were no reported MOX fuel performance problems. As discussed in the following sections, the differences in MOX fuel that are attributable to isotopics are minor, well-understood, and addressed by the Fuel Qualification process.

7.5.1.1 Physics Analysis

In light water reactors LEU fuel, RG MOX fuel, and WG MOX fuel all produce power as a result of nuclear fissions induced by a neutron field. For all three fuel types, the fissions occur primarily due to capture of thermal neutrons by uranium and/or plutonium. Both conventional low enriched uranium (LEU) fuel and WG MOX fuel can be thought of as clean fuels. When initially loaded, both fuels produce power primarily from the fission of one isotope (^{235}U for LEU fuel, ^{239}Pu for WG MOX fuel). Both fuels have relatively small amounts of heavy parasitic isotopes in their composition. In contrast, RG MOX fuel contains important quantities of poisoning isotopes that complicate calculations. Due to the presence of the parasitic fertile plutonium isotopes, a RG MOX fuel assembly will require significantly more plutonium than a WG MOX fuel assembly with the same reactivity.

Tables 7-7 and 7-8 show representative characteristics of unirradiated LEU, WG MOX, and RG MOX fuel assemblies with the same fuel mechanical design. The initial uranium enrichments and plutonium concentrations were chosen to produce an equivalent reactivity at approximately 20,000 MWD/t burnup. The tables show that all three fuel types are predominantly uranium. The plutonium mass (both total, and for individual isotopes) of the WG MOX fuel assembly falls between that of the LEU fuel assembly and that of the RG MOX fuel assembly.

As nuclear fuel is used, the elemental and isotopic constituents of the fuel change. For LEU fuel, ^{235}U is depleted, plutonium is produced, and the isotopics of the plutonium evolve. The LEU fuel plutonium isotopics are initially similar to unirradiated WG MOX fuel, but they rapidly evolve toward RG MOX fuel. For WG MOX fuel, plutonium is depleted and the isotopics of the plutonium evolve toward unirradiated RG MOX. For RG MOX fuel, the plutonium is depleted and the isotopics of the plutonium further degrade (i.e., a lower and lower percentage of fissile plutonium). These characteristics are shown on Figures 7-4, 7-5, and 7-6.

As a result of the changes described above, the source of fissions changes markedly with burnup for LEU fuel. However, both RG MOX and WG MOX fuel have little thermally-fissionable uranium, so the fissions in both MOX fuel types are approximately 90% plutonium at any burnup. This effect is shown on Figure 7-7.

The reactivity change of the fuel with burnup results from the change in elemental and isotopic composition. Depletion of ^{235}U and fissile plutonium (^{239}Pu and ^{241}Pu) reduces reactivity, as does buildup of fertile plutonium (^{240}Pu). Conversely, buildup of fissile plutonium and depletion of fertile plutonium increase reactivity. The net result of these factors on the fuel neutronic performance is illustrated in Figure 7-8, which shows the infinite multiplication factors (k_∞) of LEU, RG MOX, and WG MOX fuel assemblies as a function of burnup. LEU fuel reactivity decreases most steeply with burnup, while RG MOX fuel decreases the least. WG MOX fuel behavior lies between that of LEU fuel and RG MOX fuel.

Several important points can be made relative to the different fuel types discussed above.

- LEU fuel, RG MOX fuel, and WG MOX fuel are fundamentally similar and, from a neutronic perspective, differ due to the relative amounts of various fissionable and fertile isotopes of uranium and plutonium.
- Significant plutonium fissions occur in medium- and high-burnup LEU fuel.
- RG MOX fuel has higher initial concentrations of heavy plutonium isotopes than WG MOX fuel. For the same reactivity, the amount of plutonium in RG MOX fuel is significantly greater than the amount of plutonium in WG MOX fuel.
- The reactivity behavior of WG MOX fuel as a function of burnup is between that of LEU fuel and that of RG MOX fuel.

Some important conclusions can be drawn from these points.

- The ability to predict the behavior of cores loaded initially with all-uranium fuel requires the capability to model plutonium fuel behavior.
- RG MOX fuel presents a greater challenge to neutronic modeling methods than WG MOX fuel.
- WG MOX fuel characteristics as a function of burnup are generally bounded by LEU fuel and RG MOX fuel.

Thus, it can be concluded that nuclear analysis methods that are demonstrated to model LEU fuel and RG MOX fuel with an acceptable accuracy should also be capable of modeling WG MOX fuel with a similar level of accuracy. This is the approach that will be used by Duke Power to qualify the CASMO-4 and

SIMULATE-3 MOX computer codes for application to WG MOX fuel analyses.

7.5.1.2 Fuel Performance

The use of weapons-grade (WG) plutonium for MOX fuel in place of reactor-grade (RG) plutonium has the potential to affect fuel performance with respect to:

- Thermal Conductivity
- Fission Gas Release
- Fuel Pellet Swelling
- Radial Power Distribution

The plutonium fissile content – ^{239}Pu plus ^{241}Pu – of the WG MOX fuel is typically 94%, whereas the RG MOX fuel is 70% (see Table 5-2). Further, as discussed in Section 7.5.1.1 the RG material contains significantly higher concentrations of ^{240}Pu which acts as an absorber, reducing the reactivity of the RG material relative to the WG material. Thus, the plutonium concentrations for MOX fuel from the WG material must be reduced approximately 40% to maintain the same total reactivity as the MOX fuel made from RG material. This reduction in total plutonium concentration ensures that the macroscopic plutonium effects on fuel performance are bounded by the data from MOX fuel made from RG plutonium.

On a microscopic scale, the distribution of fissile material within the PuO_2-UO_2 matrix is controlled by the manufacturing process. In the MOX fuel fabrication process using RG material, a primary blend and micronization is performed with a UO_2/PuO_2 ratio of 70/30. This process step establishes the fissile content of the plutonium rich agglomerates. The micronized master blend is then diluted with UO_2 to reach the final plutonium concentration. Thus, the microstructure of the pellet from RG material consists of a uniform UO_2 matrix with uniformly distributed PuO_2-UO_2 agglomerates containing 30% PuO_2.

For the WG material the primary blend will be performed with a UO_2/PuO_2 ratio of 80/20. Using the same process as used with the RG material, this master mix is diluted with UO_2 to reach the final plutonium concentration. However, since the WG material has a relative 35% higher fissile content and significantly less ^{240}Pu parasitic material, the 80/20 master mix will produce plutonium rich agglomerates from the WG material that are equivalent in fissile content with the fuel produced from RG material using the 70/30 ratio. The resulting pellet microstructure for the MOX pellet

from WG plutonium will be equivalent to the pellet microstructure of the MOX pellet made from RG material.

- The UO_2 matrix that establishes the overall pellet microstructure is the same since the same process and the same feed UO_2 is used in both cases.
- The grain size, particle size, and particle distribution will be the same since the process is the same in terms of blender operation, size of sieves, pressing conditions, and sintering conditions.
- The distribution of fissile material will be the same since the particle size and distribution are the same, and the master mix adjustment has maintained the same fissile content of the plutonium rich agglomerates.

Thus, the fission density and the fission product inventory will be the same in both WG and RG MOX fuels. Since the two fuels are equivalent in fissile content and distribution of the fissile material, it can also be concluded that WG MOX fuel will behave the same as RG MOX fuel for considerations involving pellet thermal-mechanical behavior – fission gas release, transient response, and swelling.

The thermal conductivity of the WG MOX fuel will lower than that of UO_2 fuel but bounded by that of the RG MOX fuel. Since the two materials have equivalent distributions of fissile material, and the WG material has lower overall plutonium concentrations, the thermal conductivity of the WG MOX fuel will be less affected by the presence of plutonium in the fuel matrix.

The fuel pellet radial power profile for WG MOX fuel will likewise be bounded by the RG MOX fuel performance. The distribution of fissile material is equivalent for the two materials, while the total plutonium concentrations are reduced for the WG MOX fuel.

7.5.1.3 Safety Analysis

Safety analysis considerations associated with MOX fuel were addressed in Section 7.1. The only physical differences between MOX fuel and conventional LEU fuel are in the fuel pellet material and microstructure. In addition, the fuel type can influence the results of safety analyses through the nuclear characteristics of the fuel.

The material differences are relatively minor – both MOX fuel and LEU fuel are predominantly uranium oxide – and well characterized. It should be noted that WG MOX fuel has a lower concentration of plutonium than does RG MOX fuel, so WG MOX fuel material properties are even closer to those of LEU fuel than are RG MOX fuel material properties.

The microstructure of MOX fuel pellets consists of very small fissile plutonium-rich particles in a matrix of depleted uranium oxide. In contrast, LEU fuel is a homogenous matrix of enriched uranium oxide. However, most design basis transients and accidents are insensitive to microstructure differences in the fuel pellets. A reactivity insertion accident (RIA) is an extreme scenario that merits further consideration with respect to WG MOX fuel microstructure. RIAs are addressed in Section 7.5.2. As noted in that section, testing of both LEU and RG MOX fuel rods under simulated RIA conditions has been performed at Cabri. It could be postulated that WG MOX fuel behavior under RIA conditions would be different than RG MOX fuel due to the higher fissile plutonium concentration in the plutonium rich particles in the fuel matrix. However, by establishing the master mix for WG MOX fuel at 80/20 as discussed in Section 5.2.3, the fissile content of the plutonium rich particles is maintained the same as the RG material using the 70/30 mix. Thus, the power production in the WG MOX plutonium-rich particles during a hypothetical RIA will be maintained at approximately the same level as the power production in RG MOX plutonium-rich particles during the same scenario.

Fuel characteristics influence design basis transients and accidents through physics parameters such as moderator temperature coefficient, Doppler coefficient, and β_{eff}. These physics parameters are calculated using nuclear analysis computer codes that are benchmarked against operational reactor data. The ability of the computer codes to predict accurately the characteristics of both LEU and partial RG MOX fuel cores provides assurance that the same analytical methodologies can predict the characteristics of partial WG MOX fuel cores with similar accuracy.

The ability to predict the behavior of WG MOX fuel during licensing basis transients and accidents is commensurate with the ability to predict RG MOX fuel or LEU fuel during the same scenarios.

7.5.1.4 Gallium

Gallium is a low melting point element and is liquid at slightly above room temperature. It can cause embrittlement in many metals and alloys and is considered undesirable in both the processing and use of MOX fuel.

There are two primary concerns with the presence of gallium in nuclear fuel. The first relates to fabrication of the fuel. The second relates to the operation of the fuel and particularly the potential for cladding attack, with subsequent fuel rod failure.

The percentage of gallium present in weapons grade plutonium is on the order of 1% by weight (maximum of 1.2%). Depending on the quantity of plutonium being processed during fuel fabrication, this concentration could fail various furnace components used in the thermal processing (sintering) and result in extensive repairs or replacement of contaminated items. Since the mission reactors require tonnage quantities of fuel, the risk associated with furnace downtime and failures from gallium embrittlement could be high; therefore, it is required that the gallium be reduced to low levels prior to any sintering operations.

Regarding in-reactor performance, a concern has been expressed that gallium could cause degradation of the cladding. Also, the gallium could migrate to the cooler regions of the fuel rod, particularly the susceptible heat-affected weld zone, and cause embrittlement and fuel rod failure.

To resolve the potential harmful effects of gallium, the fabrication process will utilize an aqueous polishing step to effectively eliminate gallium and other impurities from the WG plutonium prior to conversion to the oxide form. The polishing step to be implemented at the MOX Fuel Fabrication Facility utilizes a solvent extraction process to produce an acceptably pure feed material for conversion to PuO_2 powder. Other processes, such as ion exchange, may be used for lead assembly fabrication, and are expected to produce equivalent feed material.

Based on COGEMA experience and predictions, the use of a polishing process is expected to allow production of MOX fuel pellets with gallium levels in the parts-per-billion (ppb) range. Gallium, at these extremely low concentrations, is not expected to have any detrimental effect on processing equipment or cladding performance.

Fuel Performance with Gallium

Testing of the effects of gallium on fuel performance, at significantly higher levels than expected in the mission reactor fuel, is currently underway in the Advanced Test Reactor (ATR) (Reference 16). The Average Power Test (APT) began irradiation in January 1998 with two types of MOX fuel

1. The first fuel type was untreated relative to impurities and contained a gallium concentration of 3.0 ppm.
2. The second fuel type was thermally treated to reduce the impurities and contained gallium at the 1.3 ppm level.

Test rods have been examined after burnups of 8,000, 21,000, and 30,000 MWd/MThm, operating at heat rates of 5-10 kW/ft. The burnups are projected to reach 50,000 MWd/MThm during future irradiation cycles. The post irradiation examinations are aimed at determining the effects of gallium on fuel rod performance, including the potential embrittlement of the Zirc-4 cladding. The performance of the test capsules has been good with no anomalous effects. These tests will continue to be followed and are expected to provide additional assurance that operation of MOX pellets with gallium concentrations as great as 3.0 ppm offers no concern for fuel rod performance.

Effectiveness of Polishing Process

The effectiveness of the polishing process to remove gallium has been evaluated through a series of laboratory tests conducted by ORNL (Reference 17). The ORNL tests introduced gallium in known quantities prior to subjecting the material to the same chemical process as the production facility. To allow the measurement of the very small amounts of gallium remaining after the polishing process, the gallium was first activated in ORNL's High Flux Isotope Reactor (HFIR). These tests confirmed that the decontamination factor (DF) for the process is greater than 10^5. Such a DF produces a final gallium concentration less than 120 parts per billion (ppb) in the feed PuO_2 powder, for plutonium containing a maximum of 1.2% gallium. When this polished feed PuO_2 powder is then diluted with depleted UO_2 powder, the final gallium concentration in the finished MOX pellet is comparable to current LEU fuel.

Gallium Content of Current UO_2 Fuels and Components

The polishing process will reduce the gallium level of the feed powder to trace levels, consistent with the level of gallium found as an impurity in currently operating UO_2 fuel pellets. These fuels have operated successfully for decades, with no indication of gallium related fuel failures. Furthermore, gallium is produced during operation from the direct activation of zinc that is typically present from processing as an impurity in cladding material and UO_2 pellets. Gallium is also present as an impurity in LEU fuel rod components – cladding and plenum springs.

Archive samples of fuel pellets and components have been analyzed at ORNL for gallium to determine the levels in UO_2 fuels that have operated successfully. The pellet samples analyzed at ORNL represent four contracts of FRA-ANP (US) fuel fabricated over a five year period from 1990 through 1994. Both Mark-B (15x15) and Mark-BW (17x17) fuel types were included, as were pellets from two pellet vendors. The results of these analyses are shown in Table 7-9.

As shown, the gallium level in the archive UO_2 fuel pellets is approximately 10 ppb. The batches of fuel represented by these archive samples operated successfully, with no indication of cladding degradation or failure. The polishing process will reduce the gallium content in the feed plutonium to less than 120 ppb; following dilution with UO_2, the polished plutonium contributes approximately 6 ppb or less to the gallium content of the finished MOX pellets. This polished PuO_2 is then diluted with depleted UO_2 that is expected to contain trace levels of gallium, at levels comparable to the enriched UO_2 samples inspected at ORNL. Thus, the finished MOX pellets are expected to contain gallium at approximately 10-20 ppb. This level of gallium in the MOX fuel is consistent with the levels of gallium that have operated successfully; therefore, gallium from the WG plutonium offers no concern for the MOX fuel.

The remaining archive fuel components, the spring and cladding, were found to contain higher levels of gallium. The average gallium content of the fuel rod plenum spring samples was 38 ppm, or 38,000 ppb. This level of gallium present as an impurity in the spring material is consistent with the level of gallium found by ORNL in the plenum springs used in the ATR tests at INEEL. The presence of gallium in the plenum spring material is significant in that it illustrates the levels of gallium that have been present in fuel components for many years, but was never known because

inspections have never been performed previously at these extremely low levels.

The archive Ziracloy-4 cladding samples contained an average of 236 ppb gallium. This measured gallium level corresponds to the same total mass of gallium in the cladding as would be present in fuel pellets if those pellets had a 50 ppb concentration (due to the different masses of cladding and fuel). The results of this evaluation are significant in that the mass of gallium introduced in the rod from the WG plutonium is much less than the mass of gallium already present in current operating cladding and fuel pellets. Thus, the presence of gallium from the WG plutonium presents no additional risk of cladding failure from gallium.

7.5.2 Reactivity Insertion Accident

The control rod ejection accident is the bounding reactivity insertion accident (RIA) for light water reactors. Design basis rod ejections in pressurized water reactors (PWRs) are analyzed by assuming the instantaneous insertion of positive reactivity (corresponding to a bounding maximum control rod worth) into the core. The reactor power increases rapidly until the fuel heats up and the resulting negative Doppler feedback surpasses the positive reactivity insertion from the ejected rod. The initial power increase triggers a reactor trip signal, and the other control rods fall into the core, terminating the power excursion. The accident is terminated in a few seconds. The event is postulated to occur at either hot full power or hot zero power, and at any time in cycle.

Control rod ejection is not considered to be a credible event for PWRs. Probabilistic safety assessments indicate that control rod ejection is not a significant contributor to risk of either core melt or offsite dose consequences. However, control rod ejections have been the bounding reactivity insertion accident evaluated in licensing basis safety analyses for nuclear power reactors.

There are three acceptance criteria for licensing basis analyses of control rod ejection accidents:

1. Energy deposition: Typically, PWRs are required to demonstrate that the radially averaged enthalpy of the fuel resulting from the accident is less than 280 calories per gram. This limit was imposed to ensure that the fuel does not disperse and produce an energetic fuel-coolant interaction. The cal/g acceptance criterion is based largely on fresh fuel experimental data generated in the 1950s and 1960s.
2. Reactor coolant system pressure: The acceptance criterion is to maintain the pressure below 120% of system design pressure.

3. Dose: Offsite dose acceptance criteria for control rod ejection accidents are 25% of 10 CFR Part 100 dose limits (i.e., 6.25 rem whole body and 75 rem to the thyroid at the exclusion area boundary). During a bounding control rod ejection accident, conservative licensing analyses indicate that a number of fuel rods will undergo departure from nuclear boiling (DNB) and are therefore assumed to fail and release fission products into the reactor coolant. Some of the reactor coolant activity is released to the environment through two pathways:
   a) A release to containment through the breach in the reactor vessel head with containment leakage to the environment.
   b) A release to the steam generator secondary side through an assumed concurrent steam generator tube leak with release to the environment through steam line relief valves.

The fuel response to control rod ejection accidents is analyzed using a coupled neutronic and thermal-hydraulic computer code. A point kinetics model has been traditionally used for many licensing calculations, and such models provide for very conservative results (overpredicting the peak power). More recently, three-dimensional kinetics models such as ARROTTA, SIMULATE-3k, and NEMO-K have been used to provide a more accurate prediction of core power response, resulting in more margin for core design.

The fundamental response of MOX fuel during a control rod ejection accident should be largely similar to the response of LEU fuel. However, there are some thermal and neutronic differences between the fuel types, discussed below.

1. Initial fuel temperature. MOX fuel thermal conductivity is lower, so the initial fuel temperature is higher while at power, making the overheating greater.
2. Doppler reactivity feedback. Partial MOX fuel cores have a more negative Doppler coefficient, which helps to mitigate the accident.
3. Effective delayed neutron fraction (beta-effective). Partial MOX fuel cores have lower delayed neutron fractions, leading to a more rapid power increase for the same positive reactivity addition.
4. Ejected control rod worth. Control rods are worth less in partial MOX fuel cores, tending to make the accident less severe. Control rod replacement with enriched B_4C rods (Section 7.1.1.2) could affect the magnitude of this reduction;

however, the net effect is expected to be a reduction in the ejected rod worth.

These differences can be quantified and the overall impact assessed using state-of-the-art analytical tools. Preliminary assessments by Duke Power using the SIMULATE-3k computer code indicated that the overall impact of MOX fuel on control rod ejection analysis results is not substantial. Duke will make a formal submittal of MOX fuel RIAs as a part of the non-LOCA safety analysis topical report described in Section 7.4.5.

There is another issue associated with hypothetical control rod ejection accidents in MOX fuel – the validity of the cal/g acceptance criterion. The NRC has indicated that the current energy deposition criterion, i.e., the radial-average enthalpy of the fuel resulting from a rod ejection accident be less than 280 cal/g, is no longer acceptable over the entire range of light water reactor fuel conditions. This issue is part of a larger issue associated with cal/g acceptance criterion for high burnup fuel - LEU or MOX. Some experimental data have produced fuel rod failures at lower than expected energy insertion levels. A test program conducted at the Cabri facility in France indicates that rod failure during reactivity insertion events can be influenced by factors such as cladding corrosion at the time of the accident, energy pulse width, and total incremental energy deposition. The NRC has continued to accept the current criteria for LEU fuel up to the fuel burnup licensing limit of 62,000 MWD/t. The NRC position is based on a number of factors, including the fact that the very nature of irradiated fuel (much of the reactivity is depleted) makes it very unlikely to exceed 100 cal/g in LEU fuel with burnups in excess of 40,000 MWD/t, the conservative nature of the licensing based analysis, and margin to the 10 CFR 100 radiological release limits.

The Cabri facility is a sodium-cooled test loop that conducted eleven experiments related to RIAs. In each test, a part-length irradiated fuel rod was exposed to a neutron power excursion similar in magnitude to (but generally higher than) energy depositions that might be experienced in realistic rod ejection accidents. Seven of the tests used a LEU fuel rod, and four of the tests used a MOX fuel rod. Two LEU tests and one MOX test experienced a rod failure during the test. In the MOX test, the fuel rod failure was unusually energetic in nature. Although post-test examinations on the specimens are not complete, a "MOX fuel effect" leading to the unexpectedly disruptive failure has been postulated.

There are ongoing discussions between the industry and the NRC with the goal of reaching agreement on an updated, burnup dependent cal/g acceptance criterion for LEU fuel undergoing a RIA. It is expected that the NRC will adopt the same or a similar acceptance criterion for MOX fuel. To demonstrate compliance with a RIA cal/g acceptance criterion,

Duke Power will perform rod ejection accident simulations with partial MOX fuel cores and quantify the impact of using MOX fuel on RIA consequences. As appropriate, Duke Power will relax some of the extreme conservatism (e.g., ejected rod worth, initial conditions) that are currently present in the licensing calculations. No additional testing should be required to demonstrate that partial MOX fuel cores meet the cal/g criterion and 10 CFR Part 100 dose limits.

The submittal to the NRC will also discuss the acceptability of the MOX fuel design for rod ejection accidents based on the following arguments:

1. The extremely low probability of a worst-case rod ejection event, especially in light of the recent NRC initiative to focus oversight on risk-significant issues.
2. Proposed burnup limits for MOX fuel that are substantially lower than LEU fuel (50,000 MWD/t MOX fuel rod burnup, vs. 62,000 MWD/t for LEU fuel rods).
3. Use of a low corrosion cladding alloy (M5™) on MOX fuel rods. (Cabri tests indicate that cladding corrosion is an exacerbating factor for high burnup RIAs).

7.5.3 Source Term/Severe Accident

Severe accidents are hypothetical events which lead to large-scale fuel damage (core melt) at light water reactors. If the primary coolant system and containment barriers are also breached, fission products and core activation products could be released to the environment, leading to significant consequences (offsite doses) to the public. These consequences could include prompt fatalities and latent cancer fatalities. Severe accidents are by their nature beyond design basis events. There has been one severe accident at a United States light water reactor – TMI-2 in 1979. At that event, the radionuclides were largely confined to the primary coolant system and the containment, and offsite consequences were minimal. Following the TMI-2 event, numerous safety enhancements were implemented at United States reactors to further reduce the probability and consequences of a severe accident.

MOX fuel is expected to behave similarly to low enriched uranium (LEU) fuel during postulated core melt events. MOX fuel, like LEU fuel, is a ceramic oxide that is primarily uranium. LEU fuel, after residence in reactors, contains appreciable amounts of plutonium and other actinides, like MOX fuel. From the perspective of fuel behavior during core melt scenarios, the fundamental severe accident phenomenology should not change with MOX fuel.

Irradiated MOX fuel has a somewhat different radionuclide inventory than LEU fuel. For fission products, this is attributed to different fission product yields. For actinides, this is attributed to different initial inventories of plutonium and americium in the fuel. The radioisotopes present in irradiated MOX fuel are the same as the radionuclides present in irradiated LEU fuel, but the quantities of each radionuclide are different. In other words, the number of Curies of a given radioisotope in MOX fuel will be different than the number of Curies in LEU fuel of similar burnup. Some radioisotopes are relatively more abundant in the MOX fuel; other radioisotopes are relatively more abundant in LEU fuel.

The magnitude and impact of the differing radionuclide inventories was assessed by the Department of Energy (DOE) in the 1999 Surplus Plutonium Disposition Environmental Impact Statement (SPD EIS). The results indicated that severe accident consequences were generally higher for the mission reactors if they had some MOX fuel (as opposed to all-LEU fuel) in their cores.

However, it should be noted that all of these scenarios are extremely low probability, beyond design basis events. The Nuclear Regulatory Commission has established safety goals for risk to the public from nuclear power plant operation. Those safety goals state that the risk of prompt fatality to a person in the vicinity of a nuclear reactor should be less than 0.5% of the overall prompt fatality risk to such a person. Similarly, the risk of latent cancer fatality to a person near a nuclear reactor should be less than 0.5% of the overall cancer risk to that person. All four mission reactors are far below (much safer than) the NRC safety goals, with or without MOX fuel in their cores.

It has been alleged that the probability of severe accidents is worse for light water reactors using MOX fuel. There is, however, no credible evidence to support this assertion. Typically, the dominant core melt sequences at light water reactors involve severe external events, such as high magnitude earthquakes, or multiple equipment failures that remove decay heat removal systems from service. These types of severe accident sequences are insensitive to nuances of fuel behavior.

To address this issue Duke Power will quantify the incremental risk associated with using partial MOX fuel cores, as opposed to all-LEU cores. The first step will be calculating the radionuclide source term for typical LEU cores and partial MOX fuel cores using the ORIGEN-S code, which is being validated for MOX fuel applications by FRA-ANP (US). The source terms will be input to a Level 3 PRA calculation to be performed by the utility. Based on the DOE SPD EIS work, it is expected that the results of the calculation will be that the overall risk associated with reactor operation with partial MOX fuel cores will increase

marginally. The calculations will show that there is no significant incremental risk to the public associated with partial MOX fuel core operation. The PRA results will be provided to the NRC as a part of the license amendment request to allow for reactor operation using batch quantities of MOX fuel.

Through FRA-ANP and EDF, DUKE COGEMA STONE&WEBSTER (DCS) will maintain cognizance of European developments related to MOX fuel. When relevant to severe accident issues, such experience will be translated to the U.S. MOX fuel project.

Figure 7-1 Mark-BW/MOX1 Fuel Assembly Design

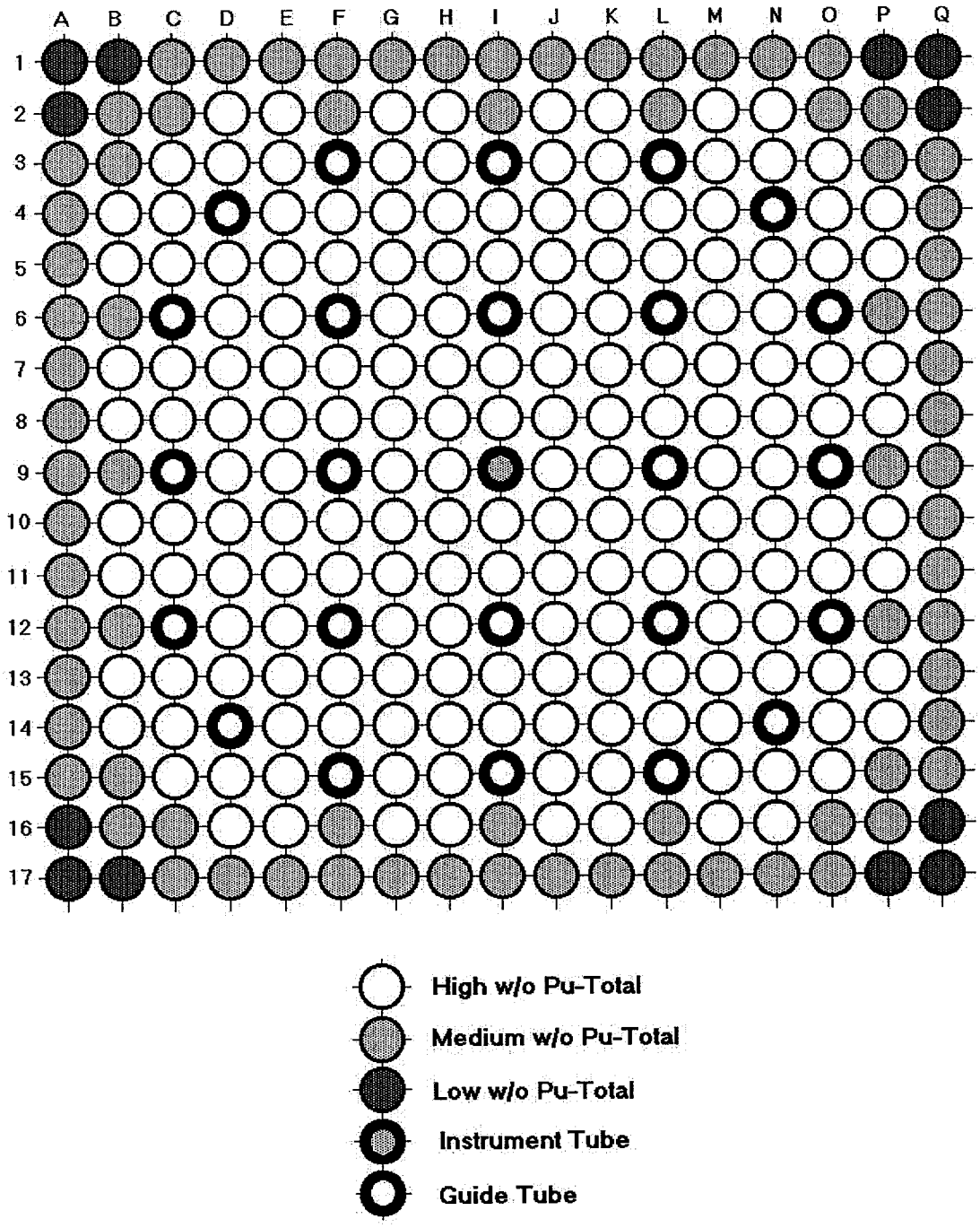

Figure 7-2 Mark-BW Burnup Experience

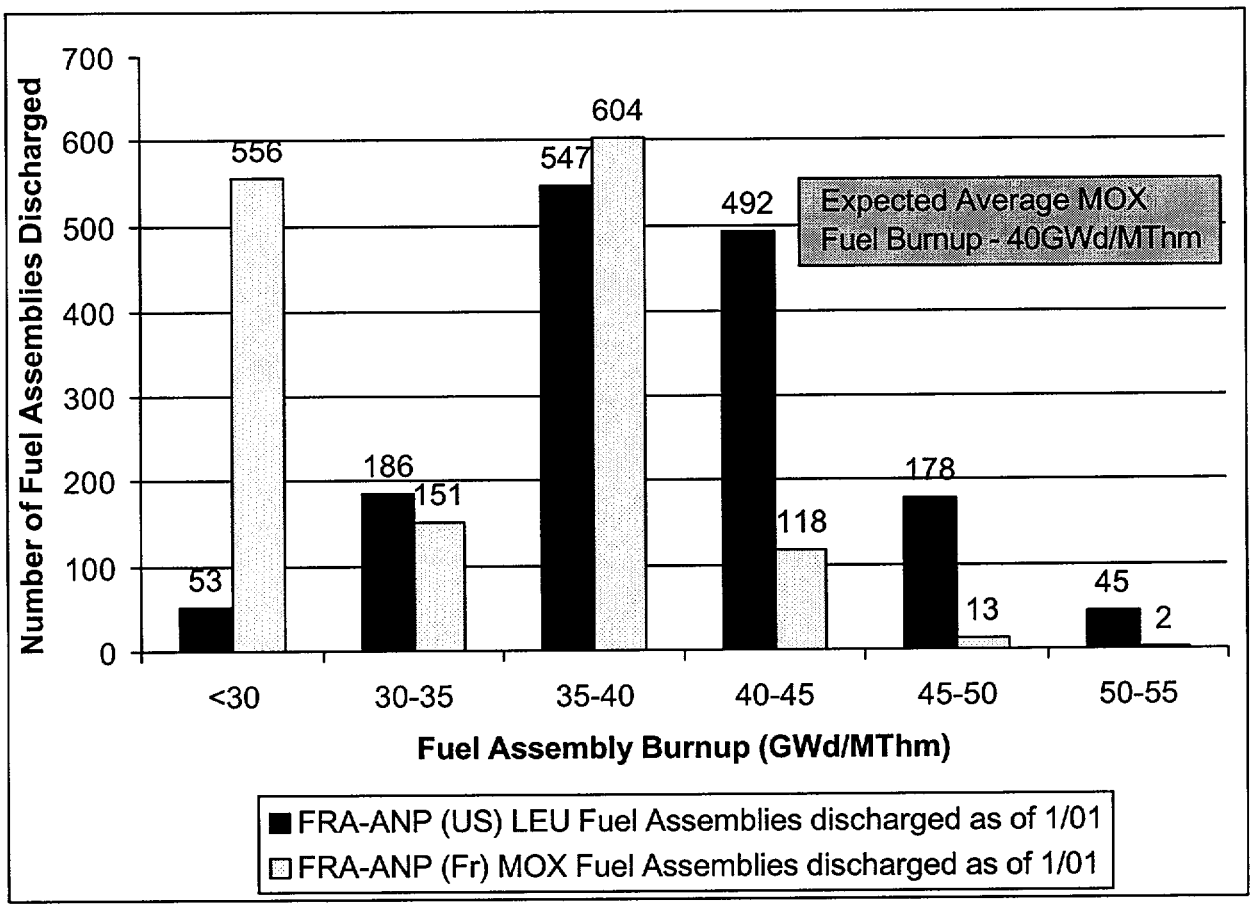

Figure 7-3 Fuel Assembly Lateral Stiffness

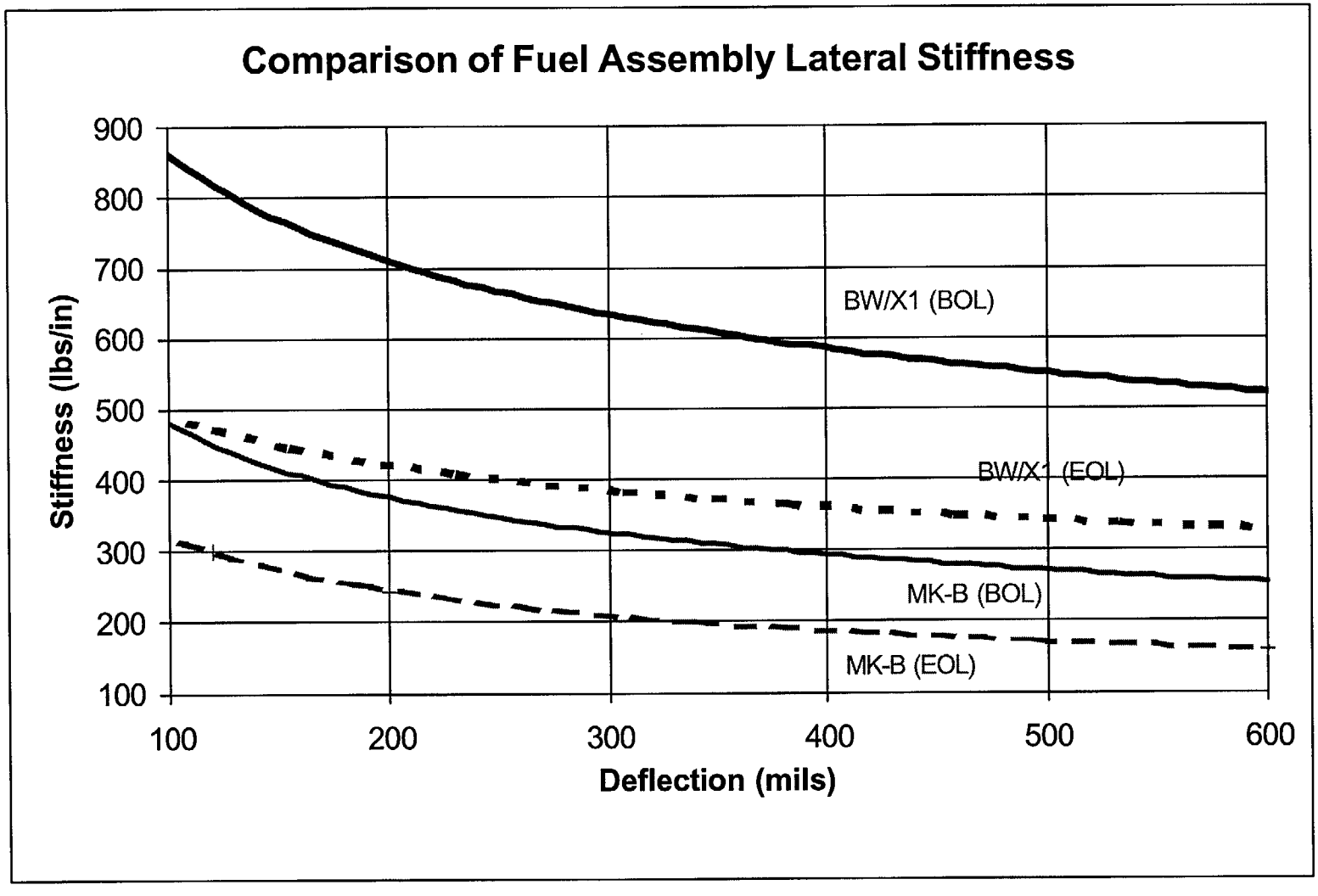

Figure 7-4 Total Plutonium Mass

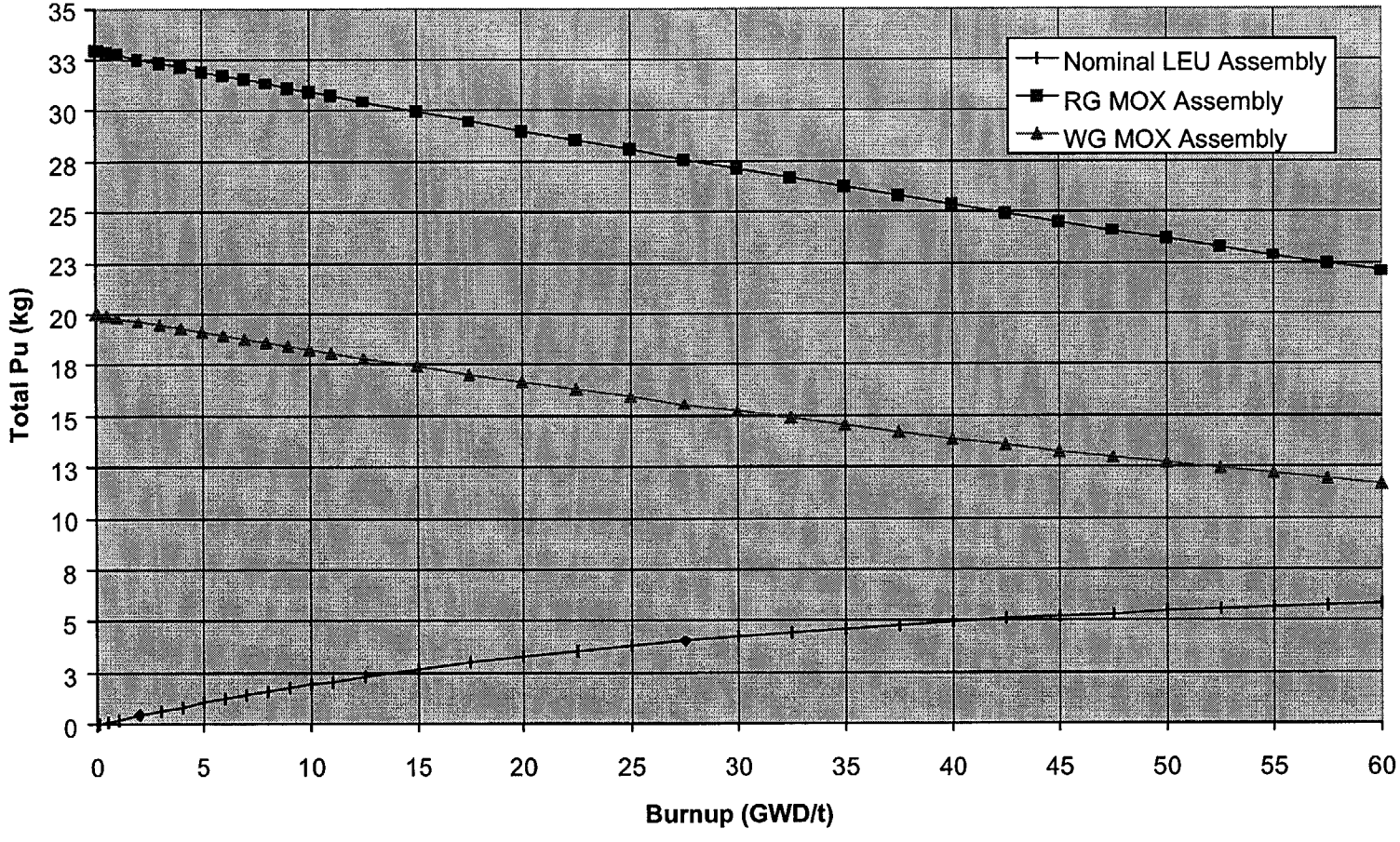

Figure 7-5 ^{240}Pu Concentration

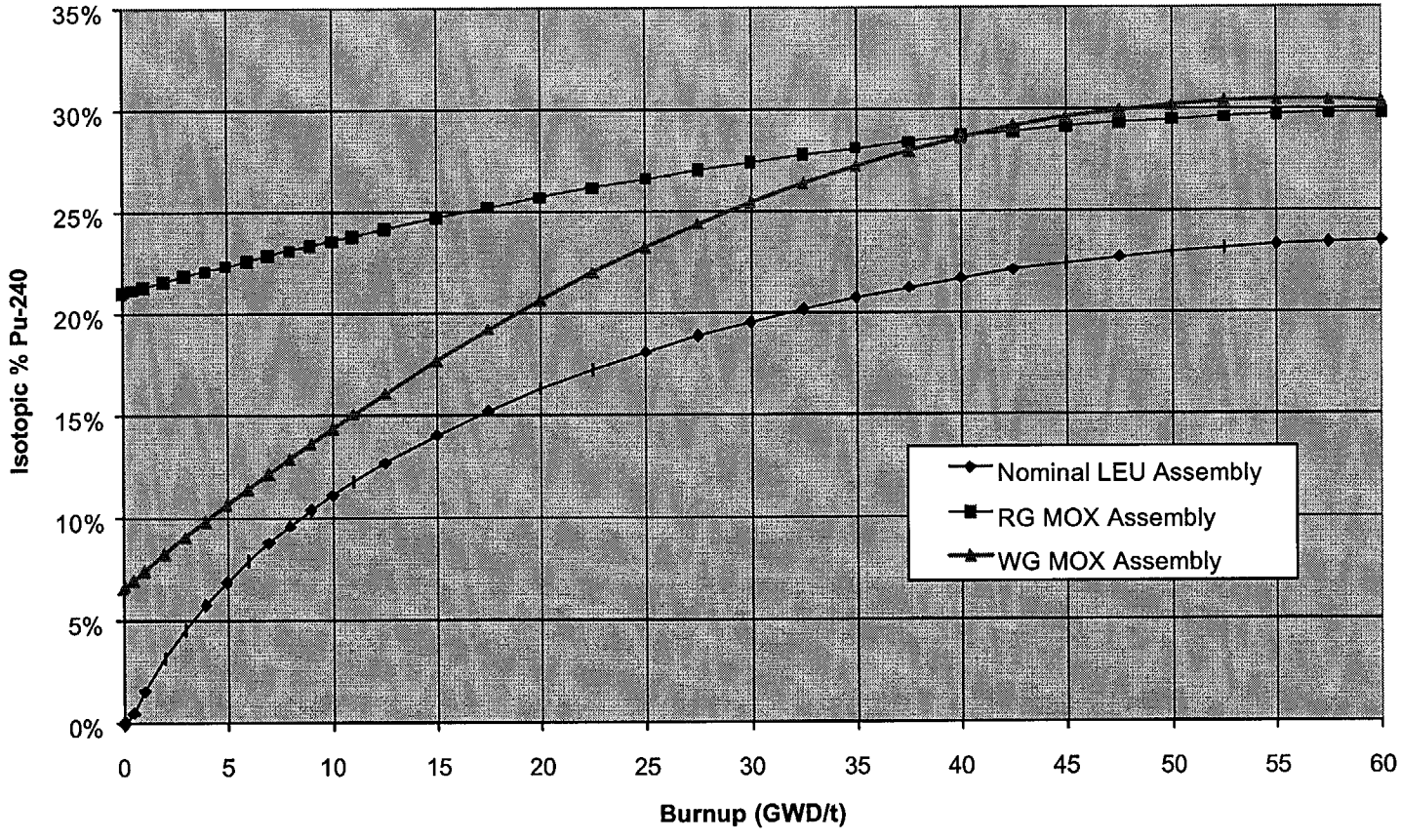

Figure 7-6 Fissile Plutonium

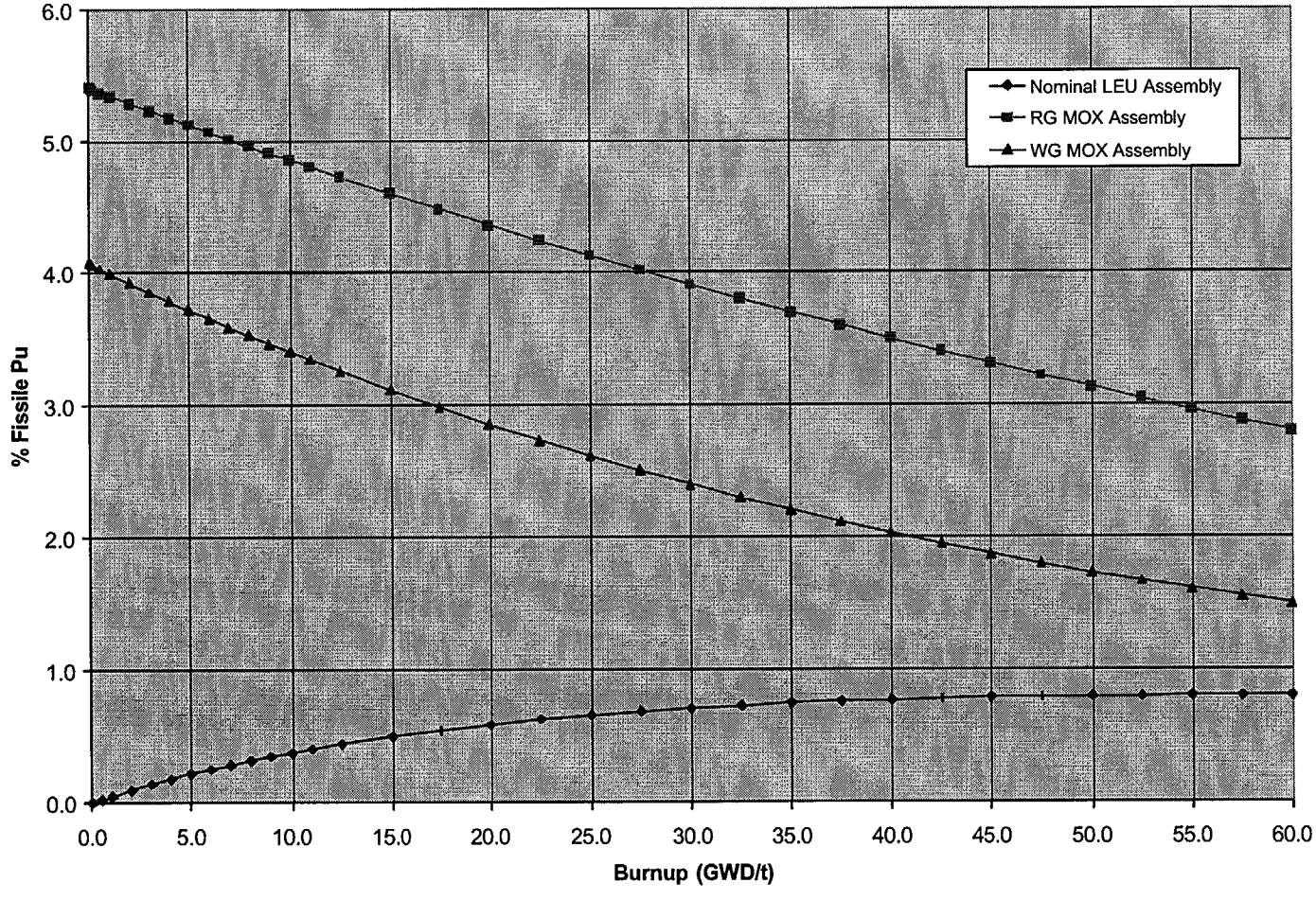

Figure 7-7 Plutonium Fissions – Fraction of Total Fissions

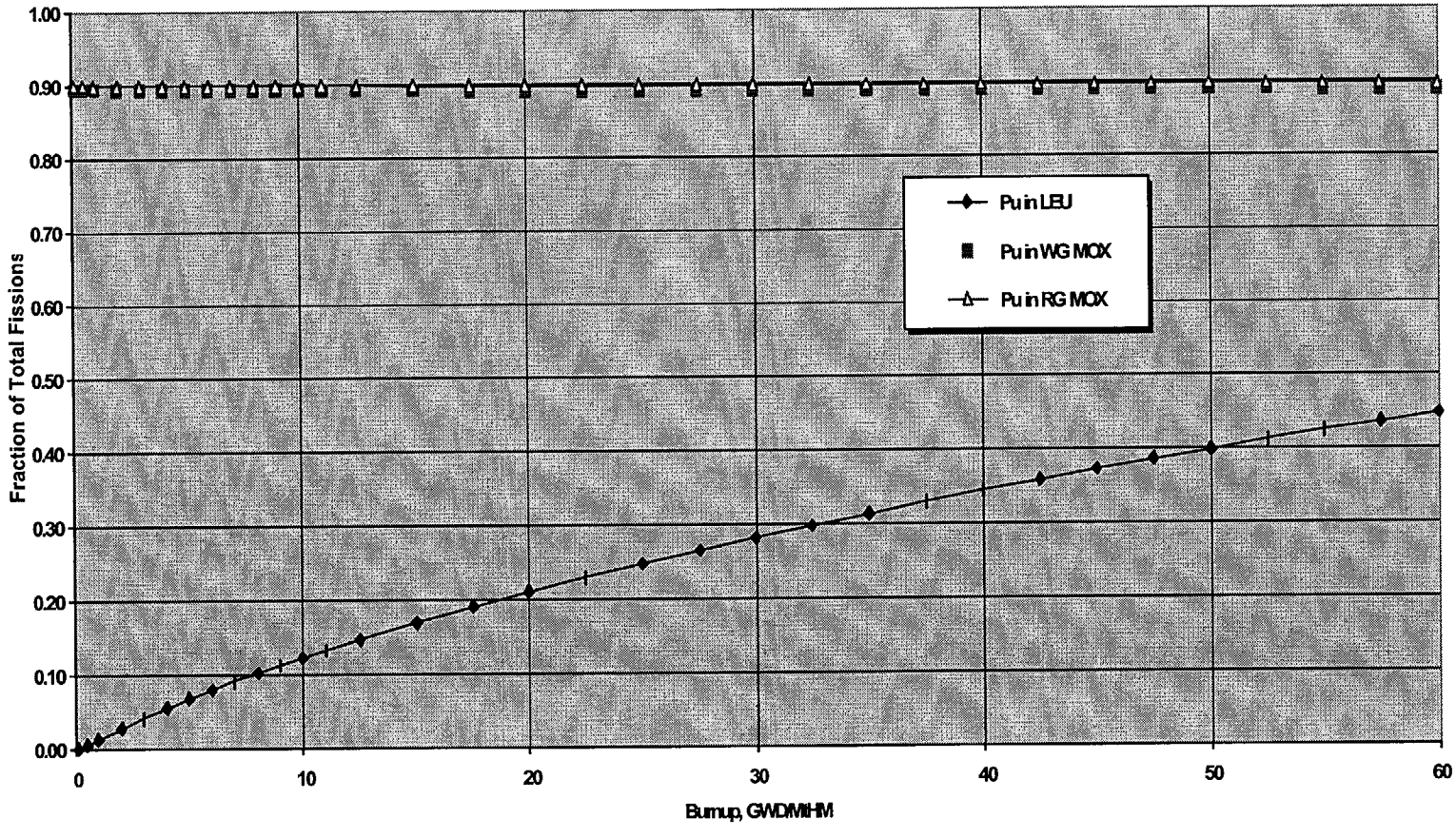

Figure 7-8 k_∞ vs. Burnup

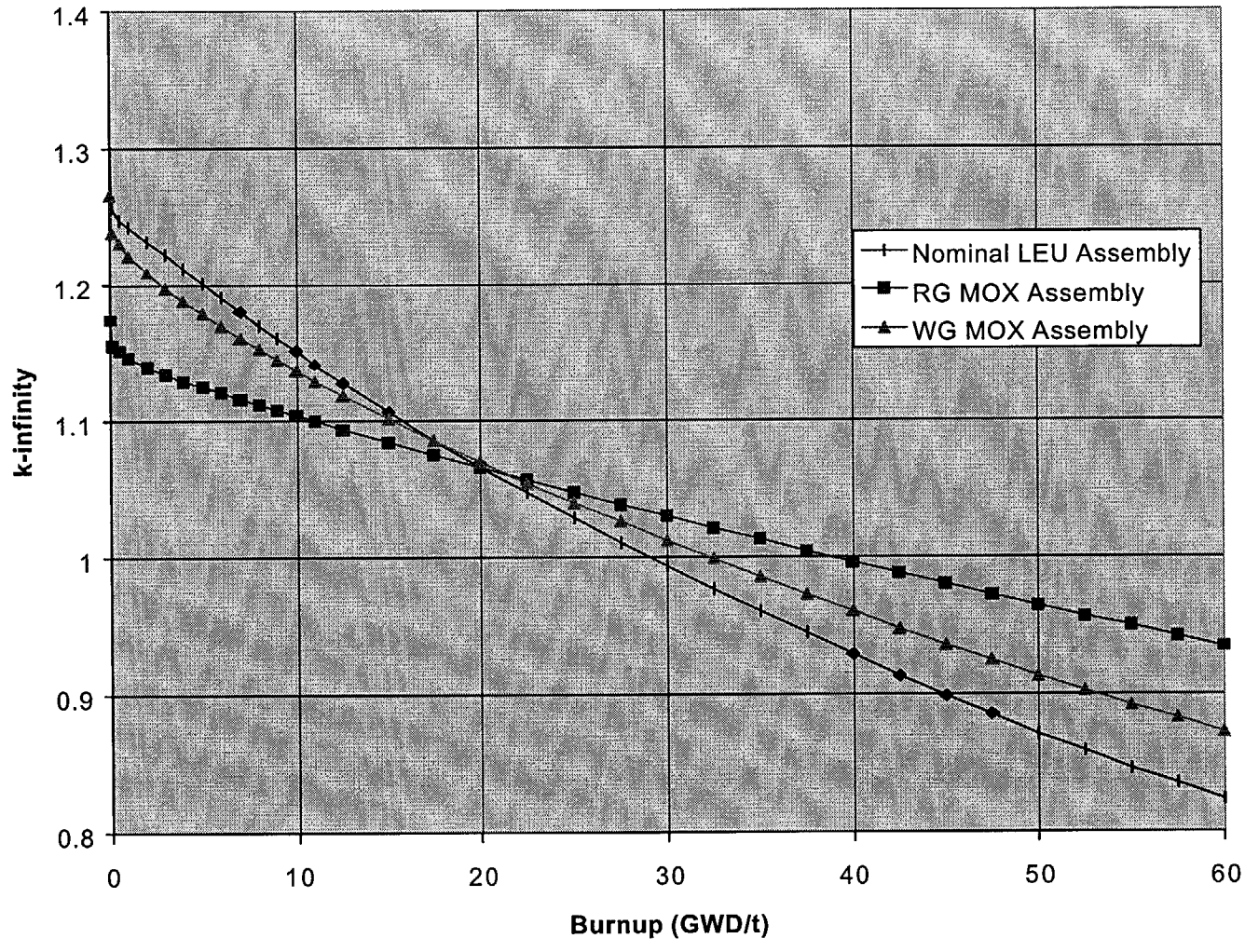

Table 7-1 Lead Assembly Experience

Program	Description	Reactor	Post Irradiation Programs	Comments
Mark B	15x15 base design	Oconee 1	Poolside + hot cell	Irradiated 5 cycles 50,200 MWd/t burn up
Mark BZ	15x15 Zircaloy spacer grid	Oconee 2	Poolside	Irradiated 3 cycles, 38,000 MWd/t burn-up
Mark-GdB	Zirc grids, RXA GTs & Gd-U02 Rods	Oconee 1	Poolside + hot cell	Irradiated 4 cycles, 58,300 MWd/t burn-up
Mark-BEB	Extended burn-up features	ANO-1	Poolside + hot cell	Irradiated 4 cycles, 57,300 MWd/t burn-up
Mark-BW15	Zircaloy lead assemblies	Haddam Neck	Poolside	Irradiated 3 cycles, 38,000 MWd/t burn-up
Mark-BW17	17x17 lead assembly	McGuire 1	Poolside	Irradiated 3 cycles, 44,000 MWd/t burn-up
Mark-BW17 SCA	Advanced Cladding Demo	McGuire 1	Poolside	Irradiated 3 cycles, 39,300 MWd/t burn-up
Mark-BW17Adv Alloy	M5 ™ Advanced Alloy Cladding Demo	McGuire 1	Poolside + hot cell	Irradiated 3 cycles, 41,600 MWd/t burn-up
Mark-B11	Lead assemblies with small diameter pin, mixing grids	Oconee 2	Poolside	In second cycle of irradiation
Mark-BW17 HEU	Demo of downloadable HEU	Sequoyah 2	Poolside	In first cycle of irradiation
Advanced Mark-BW	Demo of M5 ™ advanced alloy, mid-span mixing grids	North Anna 1	Poolside	In second cycle of irradiation
Mark-B advanced alloy	Demo of M5 ™ advanced cladding	TMI-1	Poolside	In third cycle of irradiation

Table 7-2 Fuel Assembly Spring Loads

Fuel Design	Net Holddown Load (BOL) (lbs)	Net Holddown Load (EOL) (lbs)
Mark-B	501	692
Mark-BW/MOX1 (minimum growth)	412	209
Mark-BW/MOX1 (maximum growth)	412	586

Table 7-3 French MOX Qualification Program

Time Period	Item	Description	Purpose
1974-1986	Irradiation + PIE EURATOM PROGRAM	Investigation of MOX fuel performance - 10 contracts, 48,000 MWd/MTHM rod burnup	Demonstration/fuel performance modeling
1987-1991	Surveillance program + PIE	15 fuel rods examined after 1, 2, and 3 cycles of first MOX reload (SLBI reactor) 43,000 MWd/MTHM rod burnup	Qualification of product and performance modeling
1987-1991	Irradiation + PIE	Irradiation of MOX fuel rods in the small CAP PWR under load follow condition – rod burnup = 20,000 MWd/MTHM	Fuel performance/modeling
1989-1990	Analytical experiment (EDITH MOX)	Irradiation of a leaking MOX fuel rod in an experimental loop	Fission product behavior - EDF reload policy basis
1989-1992	Surveillance + PIE	Fuel rods examined after three cycles, irradiated under load follow during third cycle – rod burnup = 43,000 MWd/MTHM	MOX fuel performance under load follow condition for qualification
1993-1994	Ramp testing + PIE	Ramp testing of two and three cycle fuel rodlets at Studsvik and OSIRIS	Pellet clad interaction data for load follow qualification
1991-1994	Analytical experiment	Out-of-pile measurements of physical properties of current MOX product	Material properties modeling
1992-1993	Analytical experiment DENSIMOX	Experimental irradiation to get densification kinetics data	Material properties modeling
1993-1995	Analytical experiment GRIMOX	Instrumented experimental irradiation for fuel temperature and FGR kinetics - 0 to 4,500 MWd/MTHM burnup	Fuel performance at high burnup, for 1/4 core management licensing
1990-1994	Surveillance + PIE (4 Lead assemblies)	Fourth irradiation cycle at core periphery - 7 rods examined (3 and 4 cycles) - rod burnup = 52,000 MWd/MTHM	Material properties modeling
1996-1998	Surveillance + PIE (1 Lead assembly)	Fourth irradiation cycle at core center - 4 rods examined - rod burnup = 53,000 MWd/MTHM	Fuel performance at high burnup, for 1/4 core management licensing
1996	Analytical experiment DEFORMOX	Instrumented experimental irradiation of UO_2 and MOX fuel; online measurement of clad deformation	Modeling
1997-	Surveillance + PIE	First reload of second generation fuel design (MELOX fuel)	High burnup surveillance - six cycles expected
1998-2000	Surveillance + PIE	Fifth cycle irradiation of one assembly at core center - rod burnup expected = 61,000 MWd/MTHM	Fuel performance at high burnup for ¼ core management licensing (UO_2/MOX parity)
1987-1993	International program PRIMO	Examination of 15 rods irradiated at BR3 + ramp test - rod burnup = 55,000 MWd/MTHM	Modeling for global rod behavior
1993-1998	International program FIGARO	Instrumented irradiation (central temperature + internal pressure) of rodlets pre-irradiated at Beznau - rod burnup = 48,000 MWd/MTHM	Modeling for fuel temperature and FGR kinetics

Table 7-4 European Plants using MOX from MIMAS Process

No.	Country	Reactor	MELOX	Cadarache	Dessel
1	France	Blayais 1	X		
2		Blayais 2	X	X	X
3		Dampierre 1	X	X	X
4		Dampierre 2	X	X	X
5		Dampierre 3	X		
6		Dampierre 4	X		
7		Tricastin 1	X		
8		Tricastin 2	X	X	
9		Tricastin 3	X	X	
10		Tricastin 4	X		
11		St. Laurent 1	X	X	X
12		St. Laurent 2	X	X	X
13		Gravelines 1	X		
14		Gravelines 2	X		
15		Gravelines 3	X	X	X
16		Gravelines 4	X	X	X
17		Chinon 1	X		
18		Chinon 2	X		
19		Chinon 3	X		
20		Chinon 4	X		
21	Belgium	Tihange 2			X
22		Doel 3			X
23	Germany	Unterweser		X	X
24		Grafenrheinfeld			X
25		Phillipsburg 2		X	X
26		Brokdorf			X
27		Gundremmingen B			X
28		Gundremmingen C			X
29		Grohnde		X	
30		Isar 2		X	
31		Obrigheim		X	
32		Neckarwestheim 2		X	
33	Switzerland	Beznau 1			X
34		Beznau 2			X
35		Gosgen			X

Table 7-5 European MOX Burnup Experience

Country	Reactors		Maximum Discharge Burnups (MWd/MThm) of Assemblies Having Completed:		
	Number	Type	3 Cycles	4 Cycles	5 Cycles
Framatome ANP, SSA (France) Deliveries					
France	20	17 x 17	40,500	46,000	55,000 (61,000 - Rod)
Belgium	2	17 x 17	44,000	46,500	
Germany	2	16 x 16 18 x 18	43,000	52,000	
Framatome ANP, GmbH (formerly Siemens) Deliveries					
Germany	9	14 x 14 to 18 x 18		49,000	
Switzerland	3	14 x 14 and 15 x 15		54,000 (65,000 - Rod)	

Table 7-6 Fuel Qualification Licensing Submittals

Application	Submittal Format	Submittal Date	Performance Attributes	Data Source
CASMO-4 SIMULATE3-MOX	Duke Topical Report	August 2001	MOX Fuel Reactivity, Reactor Power Distribution, Physics Parameters	Saxton FRA-ANP (Fr) Critical Experiments EDF Core Operation Data
LOCA Evaluation Model RELAP/MOD2	FRA-ANP (US) Topical Report	August 2001	Decay Heat Fuel Rod Model	FRA-ANP (Fr) ORIGEN-S Benchmarks COPERNIC
COPERNIC	FRA-ANP (US) Topical Report	August 2000	Thermal Conductivity Thermal Model Validation Steady State Fission Gas Release Transient Fission Gas Release Fuel Melting Temperature	French Industry Proprietary Program: GRIMOX 01 GRIMOX 02 FRA-ANP (Fr)/CEA/EDF Proprietary Programs: 7404 7415 T158 7416 7417 7418 74CA International Program: PRIMO FRA-ANP (Fr)/CEA/EDF Proprietary Programs: 7118 7131 Euratom Experimental Data (Non-Proprietary)

Table 7-7 Sample Unirradiated Nuclear Fuel Composition

	Mass (kg)		
	LEU	**Reactor-Grade MOX**	**Weapons-Grade MOX**
Heavy Metal Loading	458.0	458.0	458.0
Total Uranium	458.0	424.6	438.0
^{235}U	18.3	1.1	1.1
^{238}U	439.5	423.5	436.9
Total Plutonium	0.0	33.0	20.0
^{239}Pu	0.0	22.2	18.7
^{240}Pu	0.0	6.9	1.3
^{241}Pu	0.0	2.6	0.0
^{242}Pu	0.0	1.0	0.0

Note: Any discrepancy in the total heavy metal loading is due to the presence of trace quantities of ^{234}U and ^{238}Pu.

Table 7-8 Sample Unirradiated Nuclear Fuel Isotopics

Isotope	Isotopic Fractions		
	LEU	Reactor-Grade MOX	Weapons-Grade MOX
^{235}U	4.0%	0.25%	0.25%
^{238}U	96.0%	99.75%	99.75%
^{239}Pu	0.0%	67.3%	93.3%
^{240}Pu	0.0%	21.0%	6.5%
^{241}Pu	0.0%	7.8%	0.1%
^{242}Pu	0.0%	3.0%	0.1%

Table 7- 9 Gallium in UO_2 Fuel and Components

Fuel Pellets

Unit	Fuel Type	Pellet Vendor	Nominal Enrichment (^{235}U)	Date of Manufacture	Pellet Gallium Content (Avg. 5 samples) (ppb)
Catawba Unit 1	Mark-BW (17x17)	General Electric	3.55%	October 1990	9.8
McGuire Unit 2	Mark-BW (17x17)	Siemens	3.65%	December 1992	11.5
TMI	Mark-B (15x15)	Siemens	4.75%	June 1993	9.0
Davis Besse	Mark-B (15x15)	Siemens	3.79%	May 1994	10.8

Average Pellet Gallium Content – 10.3 ppb +/- 2.5 ppb

Fuel Components

Component	Number of Samples	Average Gallium Content
Plenum Spring	9	38,200 ppb
Zircaloy-4 Cladding	6	275 ppb

8. CONFIRMATION - LEAD ASSEMBLY PROGRAM

The fourth step on the Fuel Qualification Process is the Lead Assembly Program. Having completed the design and supporting analyses for the Mark-BW/MOX1 fuel assembly, lead assemblies will be fabricated, irradiated and examined as final confirmation of the design and fabrication processes.

As noted in Section 4.4, the number of lead assemblies is undetermined at this time. In order to provide quarter core symmetry, four (4) lead assemblies are preferred. However, recognizing the possible limitations on feed WG plutonium for this program, two (2) lead assemblies are considered acceptable. The use of two to four lead assemblies is consistent with previous lead assembly programs for confirmation of new designs prior to batch deployment. The operation of the lead assemblies is confirmatory; there are no data requirements from the lead assemblies to qualify any analytical tools or modify fuel performance models. The four mission reactors are of the same Westinghouse design and utilize the same UO_2 fuel for the resident core. Therefore, operation in any one of the mission reactors will be representative of operation in all of the mission reactors. Furthermore, the transition to batch implementation will be accomplished in phases. Following the second cycle of lead assembly irradiation, the first production batch is scheduled for operation in Catawba Unit 2 starting in October 2007 using a partial MOX core loading of only 15%. The core fraction will be increased in the second MOX batch, with the maximum core fraction (approximately 40%) not reached until the insertion of the third MOX batch. The DCS approach to MOX fuel implementation – use of a qualified fuel design, heavy reliance on European experience, use of aqueous polishing to ensure applicability of the RG plutonium experience to the WG material, confirmation through lead assembly irradiation, and a phased implementation of batch quantities – assures a safe, efficient transition to partial MOX cores.

The Mark-BW/MOX1 lead assemblies will be fabricated with the same materials and processes, and using the same design as the mission reactor fuel. Irradiation is planned for Duke Power Company's McGuire Unit 2, Cycle, 16, starting in October 2003. The lead assemblies will operate in high power, non-limiting core locations, representative of the batch operating conditions. At least one of the lead assemblies will be placed in an instrumented location. Poolside post irradiation examinations will be performed after each irradiation cycle. After two cycles an accumulated burnup greater than 42,000 MWd/MThm is projected. Based on the demonstration of satisfactory fuel performance through two cycles, the mission reactor fuel will be certified for batch implementation by October 2006.

Beyond the activities required for Fuel Qualification, a third cycle of irradiation will be performed to gain information to support higher burnup operation. A hot cell examination on selected rods from the lead assemblies will be performed at a DOE facility following this third cycle.

8.1 Purpose

The primary purpose of the Lead Assembly Program is to confirm the acceptability of the MOX fuel design for certification of the mission reactor fuel for batch implementation. In achieving this purpose, the Lead Assembly Program will address several issues, including:

a) Weapons Grade Plutonium vs. Reactor Grade Plutonium

The fuel qualification effort relies heavily on European experience that is exclusively with reactor grade plutonium. The Lead Assembly Program will help to confirm that irradiation of MOX fuel from weapons grade plutonium presents no unique challenges to the analytical methodologies that were developed for MOX fuel from reactor grade plutonium.

b) Manufacturing Processes

The Lead Assembly Program will demonstrate the successful application of the MIMAS process to the weapons grade plutonium and the application of the aqueous polishing process to reduce impurities to an acceptable level in weapons grade plutonium.

c) Trace Levels of Impurities

The Lead Assembly Program will help confirm that the presence of trace levels of gallium (<< 1 ppm) does not adversely affect fuel rod cladding integrity.

d) Fuel Assembly Hardware

The performance of the Mark-BW/MOX1 fuel design will be demonstrated.

e) Fuel Irradiation History and Burnup

The Lead Assembly Program will demonstrate acceptable MOX fuel performance under linear heat rate, coolant chemistry, and burnup conditions that are characteristic of U.S. PWR's operating on 18 month fuel cycles.

f) MOX Fuel Assembly Neutronic Response

Measurement of neutron power in MOX fuel assemblies differs from that of UO_2 fuel due to the lower thermal neutron flux in the MOX fuel. The Westinghouse-design plants use a movable incore detector to indicate assembly power from fission chambers. The signal from the fission chambers comes from a combination of the neutron and gamma flux at the detector. The gamma signal constituent is much lower than the neutron signal in a UO_2 assembly and is typically neglected. However, in a MOX assembly the gamma signal is a greater

fraction of the total signal, requiring compensation for the gamma signal input to allow accurate assembly power measurements in cores containing co-resident LEU and MOX fuel. The approach taken in European plants of a similar design has been to apply a negative bias to the incore detector signal in a MOX fuel assembly to account for the higher gamma signal fraction in MOX fuel. The bias is determined based on observed power responses in partial MOX fuel cores and on known detector sensitivities to gamma and neutron fluxes. The MOX fuel incore detector signal processing will be addressed in the CASMO-4/SIMULATE03 MOX topical submittal to the NRC (Section 7.4.3). The Lead Assembly Program will provide an opportunity to measure the WG MOX fuel assembly power using the existing movable incore detector system in order to validate the ability to predict and measure accurately the core power distribution in a mixed core.

g) Infrastructure

The Lead Assembly Program will provide the opportunity to exercise the required interfaces in terms of fuel transportation, receipt, inspection, storage, and loading of MOX assemblies, in advance of batch deliveries.

h) NRC Approval

The Lead Assembly Program will provide the opportunity to identify and resolve MOX technical issues well in advance of batch implementation. Topical reports on the fuel design as well as the methods topicals for fuel performance and LOCA evaluations will be submitted, reviewed and approved by the NRC in support of the lead assemblies, providing assurance for batch implementation that all technical issues have been successfully addressed.

8.2 Design Description

The lead assembly design will be the design to be used in the mission reactors. One fuel assembly design will be used for all four mission reactors, as described in Section 6.1. Three plutonium concentrations will be used within the assemblies, as shown in Figure 7-1. This three-zone design is identical to the approach used in the EDF reactors and will be used in the mission fuel design.

The lead assemblies, as well as the mission reactor fuel, will utilize Burnable Poison Rod Assemblies (BPRAs), as described in Section 7.1.1.9. The BPRAs will be supplied by FRA-ANP (US) based on the specification (boron concentration and number of active pins/assembly) provided by the utility.

As described in Section 6.1 and Appendix A, the Advanced Mark-BW design used as the basis for the Mark-BW/MOX1 design is fully qualified. The only changes required are those associated with the MOX pellets. The MOX pellets will be fabricated to substantially the same specifications and with the same

processes as the MOX pellets used in Europe, ensuring the applicability of the extensive European database. Some differences will be necessary to account for the higher fissile content of WG plutonium compared to RG plutonium.

8.3 Fabrication

The Lead Assembly Program will demonstrate the manufacturing processes that will be used for the disposition of the weapons grade plutonium. These processes will replicate the processes used in Europe for fabrication of MOX pellets (A-MIMAS). Polished PuO_2 powder will be supplied by DOE for the lead assemblies and will be prototypical of the powder that will be produced in the MOX Fuel Fabrication Facility for the mission reactors. The chemical and physical properties of this powder will be within the database of powders routinely used in Europe, thereby ensuring consistency with the European product and applicability of the European performance database.

There will be four complete assemblies fabricated at the DOE selected site, prototypical of batch production design and material, to demonstrate that the changes associated with implementation of MOX fuel do not adversely impact the operability of the fuel and core. The use of four fuel assemblies provides symmetry and adequate operational exposure, while supporting the mission schedule.

8.3.1 Fabrication Site Selection

As noted in Section 4.4 the DOE is currently evaluating options for lead assembly fabrication. For the purposes of this qualification plan it is assumed that the schedules for completion of lead assembly fabrication are the same as for the LANL based program.

8.3.2 Quality Assurance Requirements

The MOX Lead Assemblies are classified as nuclear safety related; all operations involved with the design and production of the MOX fuel pellets, fuel rods and the lead assemblies will be performed in accordance with the latest approved version of the FRA-ANP (US) Quality Assurance Program. This program is fully compliant with the requirements of Appendix B to10CFR50, "QA Criteria for Nuclear Power Plants and Fuel Reprocessing Plants," 10CFR21, "Reporting of Defects and Noncompliance's," ANSI NQA-1, and ISO-9001. The FRA-ANP (US) QA Specification 09-1212 translates the requirements of 10CFR50, Appendix B, for imposition on FRA-ANP (US) suppliers.

8.3.2.1 Lead Assembly Design

Design activities for the Lead Assemblies will be conducted at FRA-ANP (US) under the provisions of the FRA-ANP (US) QA Program.

8.3.2.2 Pellet Fabrication

Pellet fabrication activities will be performed at the fabrication plant under the provisions of the FRA-ANP (US) QA Program. Audits will be performed by FRA-ANP (US) QA personnel to verify compliance. During the fabrication campaign FRA-ANP (US) QA personnel will maintain an overview of the fabrication plant activity.

The pellet and rod fabrication activities must also meet the requirements of all applicable drawings and technical specifications provided by FRA-ANP (US).

8.3.2.3 Lead Assembly Fabrication

The lead assembly fabrication will be conducted in compliance with FRA-ANP (US) specifications and procedures, and with FRA-ANP (US)'s direct participation and overview. All fabrication activities will be performed under the provisions of the FRA-ANP (US) QA Program. FRA-ANP (US) will conduct audits to verify compliance. FRA-ANP (US) will be responsible for certifying that the lead assemblies meet the applicable requirements.

8.3.3 Process Description

The MIMAS process for fabricating MOX fuel for LWRs is the most recent evolution of the fabrication processes developed by BELGONUCLEAIRE and COGEMA to produce fuel pellets characterized by an intimate dispersion of plutonium in the fuel matrix. (See Figure 8-1 for the MIMAS process outline.) The MIMAS name is derived from MIcronized MASter blend, a key intermediate product in the fabrication process. The MIMAS process is currently in use at the BELGONUCLEAIRE P0 plant located at Dessel, the COGEMA Cadarache plant and the COGEMA MELOX plant.

This process was developed in 1984 by BELGONUCLEAIRE to meet the requirements for high plutonium solubility while maintaining a pellet microstructure closer to the UO_2 pellet than the MOX fuel pellets initially produced by other processes. This new process also has the benefit of

allowing larger recycling of scrap. To achieve these objectives, the PuO_2 powder is micronized with UO_2 powder and sintered recycled scraps to form a master blend with plutonium content in the range of 20 to 35 % of the total mass. The successive blending and sieving steps deliver very small plutonium rich particles whose plutonium content never exceeds the plutonium content of the primary blend.

This primary blend is force sieved and then mechanically diluted and mixed with free flowing UO_2 powder to obtain the specified plutonium content of the MOX fuel. The advantage of this process is to maintain the characteristics associated with the use of the UO_2 powder while significantly reducing the heterogeneous character of the plutonium distribution, which was observed in previous types of MOX fuel.

After final blending the fuel is processed the same as in UO_2 fuel fabrication by pressing the final blend into green pellets, sintering, dry grinding and inspecting the pellets before loading them into rods.

The main advantages of the MIMAS process regarding fabrication quality, flexibility and throughput are:

- The micronization step which concerns only about 20% of the powder leads to a reduced Pu milling time and reduced Pu dust production.
- The adequate dilution of primary blend in a flowable UO_2 powder avoids the use of any granulation after micronization.
- High flexibility, due to the capability for intermediate storage of the master blend and the ease of cross blending of powders for isotopic homogenization.
- The process allows for a high percentage of scrap recycling, qualified and used on a routine basis.
- The types and limited numbers of equipment used provides for minimal powder retention.
- The fine dispersion of primary blend in UO_2 is easily obtained by using efficient industrially proven mixers which do not affect the morphology of the UO_2 powders.

The early differences that existed between UO_2 and MOX fuels have been dramatically reduced with the introduction of the MIMAS process. However, small differences still exist with regard to performance in reactor. The fuel properties and performance for MIMAS produced MOX fuel are well established from an extensive database that has been used for code benchmarking and verification. By replicating the MIMAS process for the lead assembly fabrication and MFFF production, this database will remain valid for the WG plutonium disposition program.

8.3.4 Feed Material Requirements

8.3.10.1 Plutonium Feed

The plutonium oxide feed powder used in the fabrication of the lead assembly MOX pellets will have the same chemical and physical properties as the oxide powder routinely used in the fabrication of European MOX fuel. In both cases the oxide is derived from the nitrate through the oxalate precipitation process. This process provides significantly better control of the PuO_2 particle size, shape, and distribution compared to product obtained by dry processing, e.g. burning Pu metal to the oxide. Close control of particle size and size distribution is essential in powder production both from a manufacturing perspective and fuel performance. Following precipitation and calcination in the temperature range of 600°C to 650°C, the PuO_2 powder will be homogenized and thoroughly characterized. The chemical and physical properties of such PuO_2 must be repeatable and within the PuO_2 powder specification that DCS will provide in order to be fully consistent with the database of powders produced in Europe. Thus, this experience base will be applicable to the lead assembly product.

8.3.10.2 Plutonium Polishing

Weapons grade plutonium may have a gallium content up to 1.2%. This gallium has the potential for causing manufacturing and operational problems and thus must be removed by polishing down to the ppb range in the finished MOX pellet. The specification for the PuO_2 powder will limit the gallium levels to less than 120 ppb following polishing. This limit will ensure that the finished pellets, after mixing with UO_2 powder, will contain only trace levels of gallium, comparable with gallium levels in current UO_2 fuel.

Other contaminating elements may be present in the plutonium. Polishing is expected to reduce these elements to acceptable levels and typical of the values observed in Pu feed material currently used in Europe. The fabrication facility is expected to confirm the decontamination factors (DF) for the various elements, including gallium, to ensure that acceptable levels will be achieved by the polishing process. DCS will support the fabrication facility for this specific check and qualification.

DCS will evaluate the equipment presently used and the current operating conditions to determine if the fabrication facility is able to meet the PuO_2 specification and make appropriate

recommendations. The specification for the plutonium dioxide powder will be established by DCS and provided to the host site.

8.3.10.3 Uranium Feed

The majority of the European MOX irradiation experience is based on the use of depleted (and some natural) UO_2 prepared by the ammonium diuranate (ADU) wet route process, or by the ammonium uranyl carbonate (AUC) wet route process. The MELOX production and most of the European MOX fuel are based on ADU powder produced in the COGEMA TU-2 plant. A sufficient quantity of this UO_2 powder will be made available by DCS for the Lead Assembly Program. This approach ensures complete similarity, from the UO_2 standpoint, between the lead assembly and the European MOX experience, while avoiding any possible effects due to differences in uranium feed characteristics.

For the UO_2 supply for batch implementation at the mission reactors the same feed material will be used, i.e., the powder will be obtained by the same process as the TU2 process and with the same specifications and controls. The UO_2 powder for the MFFF will come from the COGEMA TU2 facility or from a U.S. facility qualified for the fabrication of ADU powder with the TU2 specification and controls. Use of UO_2 powder from any other source will be qualified in Europe with RG MOX before potential use in the mission reactors.

8.3.11 Mark-BW/MOX1 Qualification and Fabrication Support

Prior to production of fuel for the lead assemblies, fuel rod and fuel assembly production processes will be tested and qualified.

8.3.11.1 Pellet Qualification and Production

The WG MOX pellet fabrication process is identical to that used for RG fuel fabrication. While the Pu content for lead assembly fabrication is lower than the Pu content used in European commercial fuel fabrication, the MIMAS process has been qualified for a large range of Pu contents. The capability of the process using two cross blending operations will permit differences in the isotopic compositions of the Pu feed.

The pellet production steps include primary dosing, milling, sieving, secondary dosing, homogenizing, and pelletizing. The dosing process takes into account the isotopic characteristics of the components (PuO_2, UO_2, and scrap). The primary blend is sieved

before dosing, secondary blending and incorporation of additives. The secondary dosing takes into account the targeted Pu content and isotopic characteristics of the components. Homogenization of the secondary blend is performed just before pressing the green pellets. The green pellets are sintered, dry ground, sorted and prepared for rod loading.

The process equipment provides for intermediate powder storage to allow for cross-blending at each of the blending steps and to take into account the different throughputs and operating modes of each process step. The atmosphere in the glove boxes is specified and monitored to insure proper pellet quality.

The qualification of production will be performed prior to each concentration production campaign. The lower concentration, requiring no scrap, or only a low scrap content, is qualified and produced first. The two other concentrations are qualified and produced subsequently. Enough pellets are produced to support fabrication needs and provide material for archive rods.

Final inspection of the pellets will be performed to ensure that all the dimensional and specification requirements are met.

8.3.11.2 Rod Qualification and Production

During production the rod will be loaded with the appropriate number of MOX fuel pellets, the column length will be verified and the upper plenum spring and upper end plug will be inserted. The upper end plug will then be welded to the fuel rod using the qualified parameters derived from the qualification program. The rod will be pressurized, seal welded, and decontaminated prior to removal from the glove box. The subsequent operations will include weld inspection, gamma scanning, fuel column gap scanning, helium leak checking and final cleaning and pre-characterization of the lead assembly rods. A unique marking that will identify the rod to the specific plutonium loading will be used.

Consistent with standard nuclear practice, archive samples of the product will be retained for the MOX fuel program. The purpose of the archive rods is to provide a base line for root cause analysis studies in the event of unexpected MOX fuel behavior, and for comparison of the irradiated condition with the unirradiated base case during the hot-cell examinations.

8.3.11.3 Fuel Assembly Qualification and Production

Qualification, fabrication, and characterization of the lead assemblies will be in accordance with the standard procedures utilized at the FRA-ANP (US) fuel fabrication facility. FRA-ANP (US) will supply all procedures, route cards, specifications and inspection plans necessary for fuel assembly fabrication. All equipment supplied will have been pre-qualified prior to installation at the fabrication facility and will be re-qualified after installation and prior to first production use. FRA-ANP (US) will supply trained, qualified personnel to perform these activities.

FRA-ANP (US) is responsible for the qualification of the fuel assembly fabrication equipment, processes and personnel. As part of the qualification process, a pre-production fuel assembly utilizing dummy fuel rods will be made to exercise and qualify the total assembly fabrication process prior to first use of MOX fuel rods. A dummy fuel assembly will also be fabricated (at the FRA-ANP (US) plant) and used to check out and verify fuel assembly interfaces for shipping, handling, and storage prior to first use of the completed MOX assemblies.

The MOX fuel lead assemblies will be fabricated using standard UO_2 fuel assembly fixturing, sub-components, processes, and inspections. FRA-ANP (US) will supply the fuel assembly hardware to the fabrication facility for assembly fabrication. The location of each fuel rod within each lead assembly will be recorded by rod serial number, and the location of the different plutonium loadings will be verified and documented for each assembly. Actual overall assembly dimensions will be recorded. Water channel spacing measurements will be taken at every mid-span elevation. A final pre-characterization report will be issued to document all relevant data of the lead assembly pellets, rods, and assemblies. This information will be used as the pre-irradiation baseline data for the post-irradiation examinations. The fuel assemblies will be certified by FRA-ANP (US) to document conformance to the specification requirements.

8.4 Lead Assembly Shipment

Shipment of the lead assemblies from the fabrication site to McGuire Unit 2 will utilize the MO-1, or other approved shipping container, and Safeguards Transporter (SGT) to be provided by DOE. Any required exemptions or approvals for use of the MO-1 will be the responsibility of the DOE. Prior to use of the shipping container for lead assembly shipment, all interfaces and settings will be reviewed and verified for compatibility with the lead assembly

requirements. In addition, a pre-production assembly will be used to directly check the interfaces and settings. The MO-1 container will be shipped to the reactor site with the dummy fuel assembly inside for receipt and fuel handling verification. This prototype test of the interfaces will precede the actual shipment of the lead assemblies.

8.5 Lead Assembly Approval

The use of the Advanced Mark-BW fuel assembly as the structure for the MOX lead assemblies and the mission reactor fuel will facilitate NRC approval since the Advanced Mark-BW is fully qualified and approved. The only significant change will be the use of MOX fuel pellets rather than UO_2 pellets. The approval process for the lead assemblies will include NRC submittals for the COPERNIC fuel performance code topical report addendum, Loss-of-Coolant Accident (LOCA) evaluation model addendum, and a Mark-BW/MOX fuel assembly design topical. The topical report on the Mark-BW/MOX fuel assembly design will include an appendix to specifically address the lead assembly application. These submittals will be made to allow approval, assuming a one-year NRC review time, at least one year prior to delivery of the lead assemblies to McGuire. Duke Power will submit a specific license amendment request to allow the insertion of lead assemblies into McGuire Unit 2.

8.6 Irradiation Plan

The lead assemblies will be irradiated in McGuire Unit 2, Cycle 16, with three cycles of irradiation planned. One of the lead assemblies will be located in an instrumented location to verify predicted operational neutronic performance during the irradiation cycles. Neutronic data will be compared to similar data obtained from instrumented UO_2 assemblies to verify core predictions.

The lead assemblies will be located in relatively high power, non-limiting positions to ensure representative operating parameters for batch implementation. Figure 8-2 presents bounding power history envelopes from the MOX fuel lead assemblies (three cycles) as well as five representative MOX fuel assemblies from batch use of MOX fuel (two cycles). The figure is based on preliminary lead assembly and batch core designs. Each curve is a composite of all of the fuel rods in one assembly, and depicts the maximum power of any pin versus the maximum burnup of any pin in that assembly. As can be seen, after two cycles of irradiation, maximum pin burnups for lead and batch assemblies are comparable. The lead assemblies are projected to reach a maximum fuel pin burnup in excess of 47,000 MWd/MThm in two cycles, consistent with the Proposed fuel pin burnup limit of 50,000 MWd/MThm.

While fuel qualification activities will be completed after the second cycle of lead assembly irradiation, a third irradiation cycle of one or more of the lead assemblies will be performed to obtain data at higher burnup to confirm

performance, verify margin predictions, and benchmark fuel performance models. The maximum fuel pin burnup is expected to exceed 57,000 MWd/MThm in this third cycle. This burnup exceeds the proposed fuel pin burnup limit of 50,000 MWd/MThm. However, these data may eventually be used to justify extended burnup operation and a future increase in the burnup limit for the MOX fuel.

8.7 Fuel Examinations

The post irradiation examinations (PIEs) provide performance data to confirm the assumptions and models used for design and analysis of the WG MOX lead assemblies. The evaluation of the performance depends on several tasks. These tasks are:

- Characterization of the as-built condition of the fuel
- Poolside PIEs
- Rod Extraction and Hot Cell Examinations
- Detailed Operational History
- Data Reduction and Benchmarking to Models and Other Data Sources

The following sections describe these tasks in detail.

8.7.1 Characterization of the as-built condition of the fuel

All of the major components of the lead assembly and fuel rods will be characterized prior to irradiation. The measured characteristics of lead assembly fuel pellets will be placed in a database for use in licensing and PIE comparisons. The pellets will be measured for grain size and micro structure features including PuO_2 particle size, homogeneity of PuO_2 dispersion, resinter test performance, diameter, length, porosity distribution, and complete chemical impurity content. A statistically valid sample of pellets will be examined to completely quantify the MOX pellet attributes. Archive samples will be retained from each MOX pellet lot.

For characterization of the lead assembly rods, a number of non-routine inspections will also be included in the lead assembly inspection steps. As a minimum, the length of each MOX rod, the pellet active length, and the plenum length will be measured and recorded by serial number. Samples of in-process end plug welds and seal welds will be retained. The weight of as-loaded pellets will be identifiable to each rod serial number. A unique marking that will identify the rod to the specific plutonium loading will be used.

Consistent with standard nuclear practice, archive samples of the product will be retained for the MOX fuel program. A minimum of one full archive rod of each of the three plutonium loadings and one rod representative of each batch of MOX fuel produced (approximately ten

rods) will be retained. The purpose of the archive rods is to provide a base line for root cause analysis studies in the event of unexpected MOX fuel behavior, and for comparison of the irradiated condition with the unirradiated base case during hot cell examinations.

Following standard nuclear identification procedures, each lead assembly will be specially identified with unique serial numbers. The location of each fuel rod within each lead assembly will be recorded by serial number, and the location of the different plutonium loadings will be verified and documented for each assembly. Actual overall assembly dimensions will be recorded. Water channel spacing measurements will be taken at every mid-span elevation.

All of the characterization data will be issued in a final report that documents all relevant data of the lead assembly pellets, rods and assemblies. This information will be used as the pre-irradiation baseline data for the post-irradiation examinations.

8.7.2 Poolside PIE

The lead assemblies will be irradiated in McGuire 2 starting in cycle 16. After two cycles of irradiation, the lead assemblies will reach a burnup of approximately 40,000 MWd/MThm, with a maximum projected rod burnup of 47,000 MWd/MThm. After each cycle the assemblies will be examined poolside to verify acceptable performance and provide data for later evaluation. The poolside examinations will employ proven non-destructive techniques typically used in the examination of irradiated UO_2 fuel assemblies. The scope of the poolside examinations is expected to include the items listed in Table 8-1. This Table includes the purpose of each inspection and the expected result, relative to UO_2 assembly performance.

8.7.3 Rod Extraction and Hot Cell Examinations

DCS will extract fuel rods from the lead assemblies after the third cycle of operation. The rods will then be shipped to a DOE host laboratory, using a DCS contracted rod-shipping cask vendor. The scope of work to be performed in the hot cell is expected to include (as a minimum):

- Fission gas release
- Fuel clad metallography
- Fuel pellet ceramography
- Pellet-cladding interaction
- Burnup analysis
- Burnup distribution

8.7.4 Operational History

Detailed operational data will be obtained and recorded in a database to aid in the evaluation of the lead assemblies. One of the lead assemblies will be placed in an instrumented location to verify predicted operational neutronic performance during irradiation cycles. Also overall plant performance parameters such as power levels, temperatures, transient conditions and RCS chemistry will be recorded in detail. Detailed fuel rod power histories will be generated following the completion of the fuel cycle to allow for better accuracy in comparing predicted-to-measured performance. The detailed operational data will be provided in an Appendix in the PIE report issued after each cycle.

8.7.5 Acceptance Criteria

After each fuel cycle, the lead assembly operational conditions and the PIE measurements will be compared to specific predictions and to the overall UO_2 fuel database. The measurements performed after the first and second cycle will provide the basis for final Certification that the Fuel Qualification Plan has been completed and the fuel is ready for batch implementation.

Lead Assembly Performance Criteria for Batch Operation	
Measurement	Criteria
Fuel assembly growth	Fuel assembly growth shall not be greater than 0.41% dl/l at 44,000 MWd/MThm
Fuel rod growth	Fuel rod growth shall not be greater than 0.7% dl/l at 44,000 MWd/MThm
Fuel assembly RCCA drag force	Drag force shall not exceed 100 lbf in dashpot 60 lbf above dashpot
Fuel rod integrity	No failed fuel rods in the lead assemblies from MOX fuel related causes
Fuel rod oxide thickness	Peak Oxide thickness (using moving average over 1 inch) shall not exceed 50 microns.

Later, after the third cycle hot cell exam a second comparison will be performed to compare hot cell results to specific predictions, the overall UO_2 fuel database, and to both specific MOX results and the overall MOX database. In addition the hot cell results will be compared to poolside measurements to verify poolside measurement techniques.

Figure 8-1 MIMAS Flow Diagram

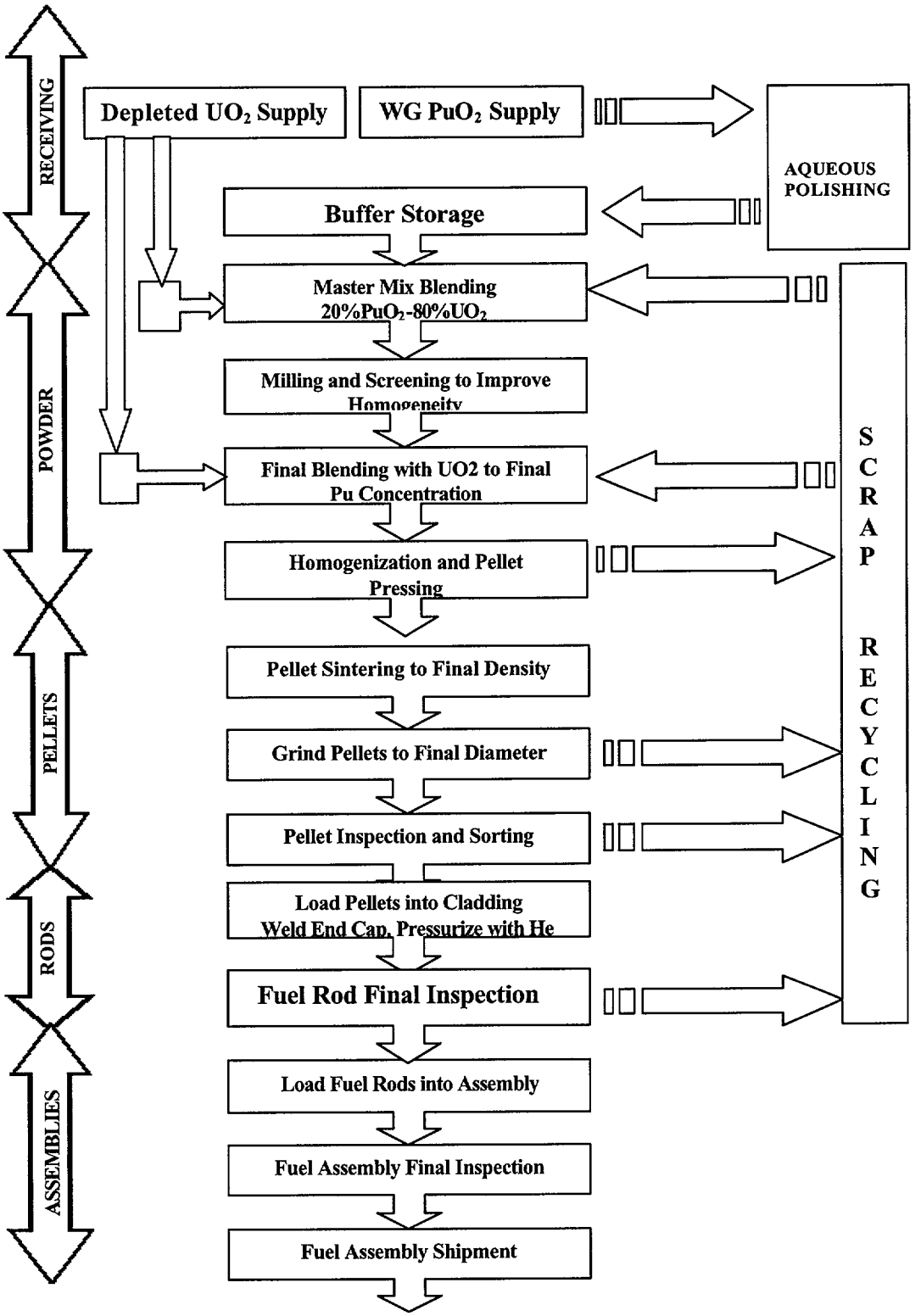

Figure 8-2 MOX Fuel Power Histories

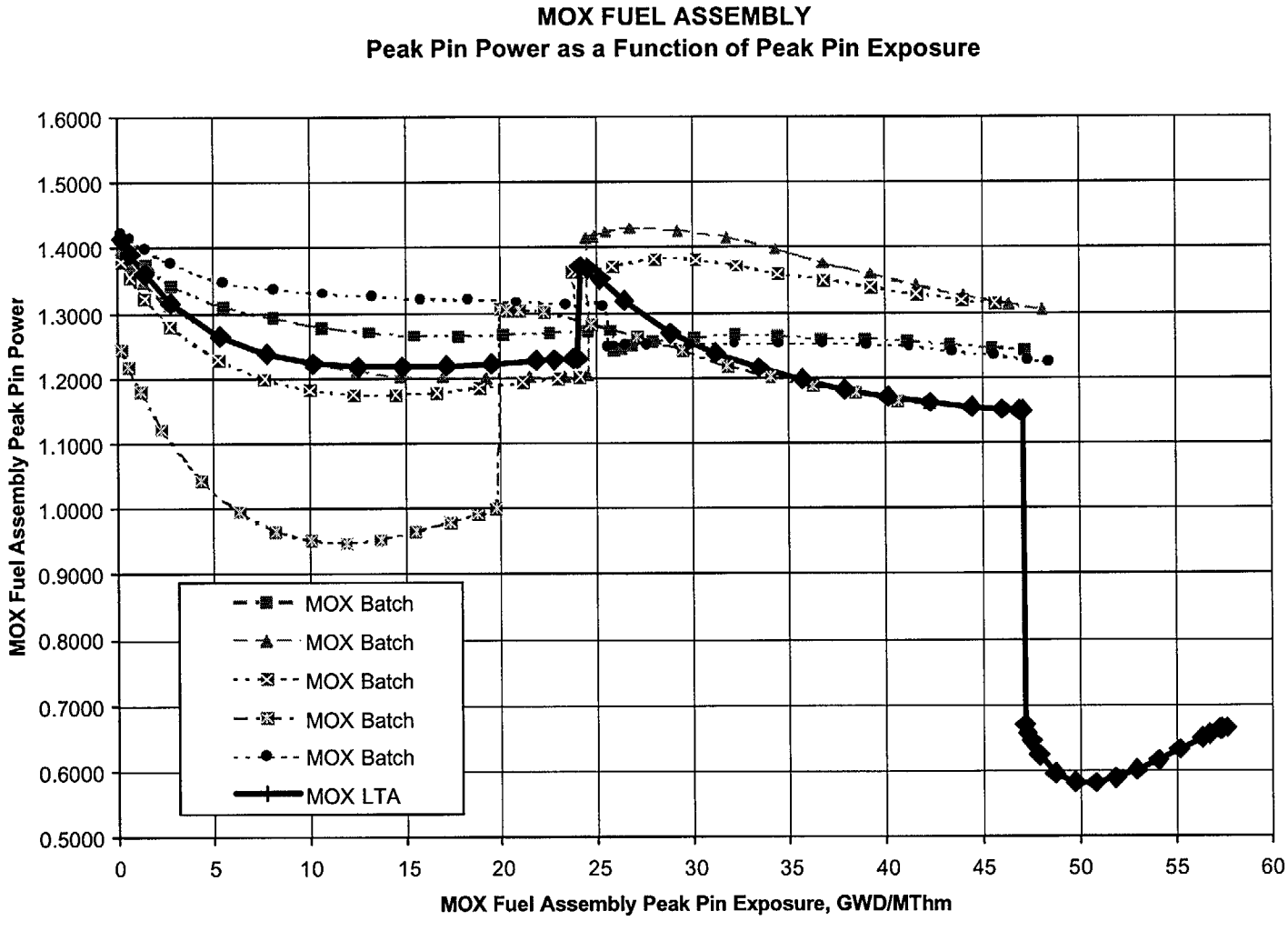

Table 8-1 Lead Assembly Poolside Post Irradiation Examination

INSPECTION	PURPOSE	EXPECTED RESULT
Fuel assembly visual	Overcheck to provide confirmation of acceptable performance.	Same as UO_2 with M5™ clad fuel rods and guide thimbles.
Fuel rod visual	Overcheck to provide confirmation of acceptable performance.	Same as UO_2 with M5™ clad fuel rods.
Fuel rod CRUD measurements	Confirm equivalency to UO_2 fuel rod. Address AOA issues.	Same as UO_2 fuel – light CRUD deposits
Fuel rod growth (shoulder gap closure)	Confirm acceptable margin for fuel rod operation. Verify shoulder gap.	Same as UO_2 with M5™ clad fuel rods and guide thimbles
Fuel assembly growth	Confirm predictions and equivalency with UO_2 assembly	Same as UO_2 with M5™ clad fuel rods and guide thimbles
Fuel assembly RCCA drag force	Address incomplete RCCA insertion issue.	Same as UO_2 with M5™ guide thimbles
Fuel rod oxide thickness	Confirm equivalency to UO_2 rod. Compare to corrosion predictions.	Same as UO_2 with M5™ clad fuel rods
Fuel rod fission gas release	Confirm predictions.	Slightly higher that UO_2 rods due to slight increase in operating temperature
Water gaps (fuel rod bowing)	Determine rod bow equivalence to UO_2 rod and FA envelope	Same as UO_2 with M5™ clad fuel rods and guide thimbles
Grid width	Confirm grid growth predictions, equivalency to UO_2 fuel assembly.	Same as UO_2 with Zircaloy grids
Grid oxide thickness	Confirm grid strength margins.	Same as UO_2 with Zircaloy spacer grids
Guide thimble plug gauge	Address incomplete RCCA insertion issue. Verify distortion free operation.	Same as UO_2 with M5™ guide thimbles, all gauges pass all grid spans,
Guide thimble oxide	Verify guide thimble corrosion margins.	Same as UO_2 with M5™ guide thimbles
Fuel assembly bow and distortion	Address incomplete RCCA insertion issue. Verify FA growth models.	Same as UO_2 with M5™ clad fuel rods and M5™ guide thimbles

9. CERTIFICATION AND BATCH IMPLEMENTATION

The final step in the Fuel Qualification Process is the Certification of completion of the Fuel Qualification Plan to allow batch implementation. This Certification will be issued to DOE following confirmation of the fuel performance through two cycles of lead assembly irradiation. The following sections detail the processes to be followed for the interfaces between the Fuel Qualification effort and the production fuel relative to design and design control, manufacturing, shipping and handling, storage, security and safeguards.

9.1 Production Design and Processes

The fuel assembly design basis is maintained through a FRA-ANP (US) QA controlled procedure that defines the product by way of the applicable drawings and specifications. This Technical File describes the product in sufficient detail to ensure consistency from one manufacturing campaign to another. The Technical File for the Mark-BW/MOX1 will be transmitted by way of a Design Interface Document to the utility using the fuel, to the lead assembly fabrication facility, and to the MFFF. In this manner, the mission reactor fuel produced at the MFFF for McGuire and Catawba will be identical to the lead assemblies.

Further, the pellet manufacturing process to be used at the MFFF, and the process to be used at lead assembly fabrication facility, will replicate the MIMAS process used in Europe. Maintaining the same fabrication process will ensure that the lead assemblies and the MFFF produced fuel are prototypical of the fuel produced in Europe, which is the source of the data used for benchmarking and verification.

9.2 Fuel Design Change Control

In response to utility's needs for continuing improvements in fuel reliability and safety margins, fuel designs will continue to evolve. Given the significant time span of this program, it is likely that additional evolutionary changes will be made to the proposed fuel and BPRA design prior to the lead assembly program or the irradiation of reload batches. Any major fuel assembly or BPRA changes to be incorporated into the lead assemblies or batch fuel will be qualified for UO_2 fuel assemblies prior to their incorporation into the MOX assemblies. This will ensure that the MOX fuel lead assemblies will clearly demonstrate the effects of MOX fuel while also being representative of, and consistent with, the UO_2 fuel designs that will be available at the time of batch implementation.

The design change process at FRA-ANP (US) is controlled by administrative procedure to ensure that all changes are thoroughly reviewed, including review and approval by the utility customer, prior to implementation. Duke Power is required to maintain the licensing basis for the fuel per NRC Bulletin 96-02 relative to Literal Compliance. Therefore, the utility must be involved with, and

fully cognizant of, all fuel design changes. Significant design changes require the review of an independent Design Review Board, and may also require NRC review and approval prior to implementation. All design changes must be supported by appropriate analysis and testing to ensure compliance with all design criteria.

9.3 Shipping

The fresh fuel assemblies will be shipped from the MOX Fuel Fabrication Facility (MFFF) to the mission reactor sites utilizing the new MOX Fresh Fuel Package (MFFP) and DOE-provided Safeguards Transporter (SGT). The MFFP will be designed and certified to interface with the Mark-BW/MOX1 fuel assembly. The design will ensure that the Mark-BW/MOX1 assemblies are adequately secured and supported for fuel handling shock, vibration, and temperature limits for both normal and accident conditions. Design requirements for the MFFP will be provided through the Design Interface Document prepared under the fuel qualification effort.

9.4 Handling and Storage

The European experience with RG MOX fuel indicates that special fuel handling and storage precautions are required relative to UO_2 fuel with respect to heat load and radiological issues. However, the WG material is expected to require no special handling considerations due to the different isotopic makeup of the WG plutonium. New fuel from RG plutonium will have a significantly larger concentration of ^{240}Pu (24%) than the WG material (<6%) and will contain significant concentrations of ^{238}Pu, ^{241}Pu, ^{242}Pu, and ^{241}Am, whereas the WG material will have less than .5% of these isotopes. The WG material with its low concentrations of ^{240}Pu and ^{241}Am is not expected to require special shielding once the pellets are loaded into the cladding and the rods are sealed.

In addition to the shielding considerations, fresh MOX fuel will generate heat that must be removed to meet temperature limits for the fuel. Fresh MOX fuel from RG material produces several hundred watts; due to the different isotopic makeup of the WG material, the projected heat load of the mission reactor fuel is only about one-fifth that of the RG fuel.

FRA-ANP (US) supplies the utility customers for UO_2 fuel with documentation of fuel handling recommendations, limits and precautions. This documentation will be supplied to Duke Power for the Mark-BW/MOX1, for both the lead assemblies and the mission reactor fuel. Sections of the document will deal specifically with radiation protection and shielding requirements, and with special handling and storage requirements due to the residual heat production of the fresh MOX fuel. It is expected that no special requirements will be imposed for the Mark-BW/MOX1 and will be comparable to UO_2 fuel.

Based on the design parameters discussed above, a Mark-BW/MOX1 fuel assembly may be handled and stored in the following manner:

- Upon initial receipt at the site, a visual examination of the assembly will be performed. This examination is planned to be performed without the use of video cameras. If fuel assembly documentation indicates there are additional radiological concerns associated with the receipt inspection, site radiological protection personnel will determine additional measures to take.

- Following the visual examination, the mission reactor fuel will be stored in the spent fuel pool, an area within the Fuel Building, which is classified as a Vital Area. The mission reactor fuel will remain in storage within this Vital Area until it is transferred into the Reactor Building for use in the reactor core. The Reactor Building and fuel transfer path are also classified as Vital Areas, thereby providing the same level of security as the Fuel Building.

9.5 Security and Safeguards

The mission reactor fuel will be fabricated in DOE facilities. All security and safeguards during fabrication will be provided by the DOE. Shipping of fresh fuel will be the responsibility of DOE using Safeguards Transporters (SGT) with fresh fuel packaging supplied by the DCS team.

After arrival at the mission reactor site, responsibility for security will be transferred to the utility upon acceptance of the shipment by utility personnel. DOE supplied security for the shipment (convoy escorts) will remain on site until responsibility for the fuel is transferred to the utility. The SGT operators will remain with the shipment until the containers are offloaded in the fuel receiving area. The fresh fuel will be stored in the spent fuel pool prior to loading into the reactor where it will be inaccessible.

An appropriate level of security will be provided during the fuel receipt/unloading process and during the time the fuel is in the spent fuel pool. Specific security measures will be developed by Duke Power as part of the reactor licensing process lead assembly irradiation and batch implementation. This process will be described in more detail in the Mission Reactor Licensing Plan to be submitted to DOE. These additional security measures will address personnel access controls to the storage area, as well as the capabilities for detection, assessment, and security force response to unauthorized access attempts. Specific details of the Security & Safeguards program elements will also be documented in the facilities' Security Plan.

The U.S./Russia Agreement on Plutonium Disposition specifies that safeguards requirements will be negotiated between the two countries. These negotiations are not yet complete. While it is expected that some form of international [International Atomic Energy Agency (IAEA)] or bilateral safeguards

requirements will be implemented at the two mission reactor sites, the specific safeguards requirements, and the programmatic and procedural changes necessary to meet these requirements, are not known at this time.

10. CONCLUSION

This Fuel Qualification Plan has implemented the overall qualification strategy by providing a description of the step-by-step process to be used by the DCS team to design, license, confirm, and implement WG MOX fuel in the mission reactors.

10.1 Action Plan

Following are the significant tasks to be performed in implementing the Fuel Qualification Plan, with the projected completion date:

Action	Completion Date
Complete MOX Pellet Specification	February 2000*
Complete MOX Fuel Rod Design	February 2000*
Submit COPERNIC MOX Addendum	August 2000*
Submit new Appendix to Duke Power Thermal-Hydraulic Statistical Core Design Methodology to NRC	July 2001
Submit LOCA EM MOX Addendum	August 2001
Submit RELAP/MOD2 Revision	August 2001
Submit Duke CASMO4/SIMULATE-3 MOX	August 2001
Submit MOX Fuel Design Topical	August 2001
Submit Duke Power License Amendment Request with Lead Assembly Addendum	August 2001
Release Design Interface Document	July 2002
Perform Final Design Review	July 2002
Submit Duke Power Safety Analysis Methodology for MOX Fuel Core Topical	April 2003
Complete lead assembly pellet fabrication	March 2003
Complete lead assembly certification	July 2003
Complete lead assembly shipment	August 2003
Start lead assembly irradiation	October 2003
Complete 1st cycle irradiation	March 2005
Perform 1st cycle poolside PIE	March 2005
Start lead assembly 2nd cycle irradiation	April 2005
Complete 2nd cycle irradiation	September 2006
Perform 2nd cycle poolside PIE	September 2006

*complete

In addition to the activities required for Certification, the following tasks will be performed in support of model upgrades and potential improvement in burnup limits.

Start lead assembly 3rd cycle irradiation	October 2006
Complete 3rd cycle irradiation	March 2008
Perform 3rd cycle poolside PIE	March 2008
Rod extraction and shipment to hot cell	November 2009
Complete hot cell examinations	November 2010

10.2 Certification of Fuel Qualification

Certification of completion of the Fuel Qualification Plan will be issued to DOE upon completion of the second cycle PIE on the lead assemblies and analysis of the results confirming predicted performance.

Certification for Batch Implementation	October 2006

In the unlikely event that the PIE at the end of the first or second cycles of irradiation fails to confirm the applicability of the European RG experience or indicates any anomalous behavior, the Certification for Batch Implementation will be delayed until all technical issues are resolved.

11. REFERENCES

1. Mission Reactors Irradiation Plan, DCS-IS-1999-001, January 2000.

2. Mission Reactors Licensing Plan, DCS-IS-2000-001, November 21, 2000.

3. Special Nuclear Material Transportation and Integration Plan, TNY-TD-001, November 17, 1999.

4. D.B. Mitchell and B.M. Dunn, Evaluation of Advanced Cladding and Structural Materials (M5) in PWR Reactor Fuel, BAW-10227P-A, February 2000.

5. COPERNIC Fuel Rod Design Computer Code, BAW-10231P, September, 1999.

6. Letter, T.A. Coleman to U.S. Nuclear Regulatory Commission, Topical Report BAW-10231P, "COPERNIC Fuel Rod Design Computer Code," Chapter 13 MOX Applications, GR00-088.doc, July 31, 2000.

7. Duke Power Company Nuclear Design Methodology Using CASMO-4/SIMULATE-3MOX, DPC-NE-1005, Rev. 0.

8. R.C. Deveney, et.al., SCIENCE, Topical Report BAW-10228P-A, December, 2000.

9. "BWNT LOCA Evaluation Model for Recirculating Steam Generator Plants," BAW-10168, Revision 4, July 2000.

10. D.A. Farnsworth and G.A. Meyer, "Testing and Analysis of the Mark-BW Fuel Assembly Design," BAW-10189P-A, January, 1996.

11. D.A. Farnsworth and G.A. Meyer, "The BWU Critical Heat Flux Correlations," BAW-10199P-A, August, 1996.

12. Duke Power Company Thermal-Hydraulic Statistical Core Design Methodology, DPC-NE-2005, Rev.3.

13. P. Blanpain, et.al., ANS Fuel Performance Meeting, March 2-6, 1997, Portland, Oregon.

14. M. Lippens, et.al., Symposium on MOX Fuel Cycle Technologies for Medium and Long Term Development, Vienna, May 17, 1999, IAEA-SM-358/15.

15. Minute of the Workshop on Fabrication, Performance, and Modeling of MOX Fuel, Halden, September, 1999, HWR-623.

16. R. N. Morris, et.al., MOX Average Power Test 30 GWd/MT PIE: Quick Look, ORNL/MD/LTR-208, February 2001.

17. E.D. Collins, D.O. Campbell, L.K. Felker, Measurement of Achievable Plutonium Decontamination from Gallium by Means of Purex Solvent Extraction, ORNL/TM-1999/312, January 2000.

18. F.C. Diamyuga, M.R. Floyd, D.S.Cox, "Fabrication and Performance Testing of CANDU Mixed-Oxide Fuel," Symposium on MOX Fuel Cycle Technologies for Medium and Long Term Development, Vienna, IAEA-SM-358/22, May 1999.

19. W. Goll, et, al., "Irradiation Behavior of UO2/PuO2 Fuel in Light Water Reactors," Nuclear Technology, Vol. 102, April1993.

20. C.T. Walker, et.al., "Effect of Inhomogeneity on the Level of Fission Gas and Cesium Release from OCOM MOX Fuel during Irradiation," Journal of Nuclear Materials, Vol. 228, 1996.

21. I. Kurita, K. Kikushi, T. Abe, "MOX Fuel Irradiation Behavior in a Thermal Reactor," Symposium on MOX Fuel Cycle Technologies for Medium and Long Term Deployment, Vienna, IAEA-SM-358/17, May 1999.

22. W. Wiesenack, M. McGrath, "Performance of MOX Fuel: An Overview of the Experimental Program of the OECD Halden Project and Review of Selected Results," Symposium on MOX Fuel Cycle Technologies for Medium and Long Term Deployment, Vienna, May 1999.

23. C. Brown, et.al., "Performance of BNFL SBR MOX Fuel for the Next Decade," TopFuel '99, LWR Fuel Highlights at the Beginning of the Third Millennium, Avignon, France, September 1999.

24. G.A. Gate, R.J. White, "Start-of-Life Gap Conductance Measurements on SBR Mixed Oxide Fuel," ANS International Topical Meeting on Light Water Reactor Fuel Performance, Park City, Utah, April 2000.

25. Cowell, B. S., Fisher, S. E., "Survey of Worldwide Light Water Reactor Experience with Mixed Uranium-Plutonium Oxide Fuel," ORNL/TM-13428, February 1999.

Appendix A QUALIFIED FUEL DESIGN

The MOX program will utilize FRA-ANP (US)'s Advanced Mark-BW, a fully qualified fuel assembly design that will allow the qualification program to focus on the MOX fuel implementation.

A.1 Design Description

The Advanced Mark-BW fuel assembly, shown in Figure A-1, is a 17x17, standard lattice fuel assembly specifically designed for Westinghouse-design reactors. All four mission reactors utilize the 17x17 product. The Advanced Mark-BW adaptation for MOX application, the Mark-BW/MOX1, is dimensionally and structurally identical to the Advanced Mark-BW with the only change appearing in the fuel rod internal design. The Advanced Mark-BW and Mark-BW/MOX1 include the following base features:

- Seated fuel rods
- Floating intermediate spacer grids
- Keyable spacer grids
- Removable top nozzle
- High thermal performance spacer grids
- TRAPPER™ bottom nozzle
- M5™ alloy fuel rod cladding

A.1.1 Advanced Mark-BW Structure

The structural cage of the Advanced Mark-BW and Mark-BW/MOX1 designs consists of twenty-four (24) M5™ control rod guide thimbles attached to an upper and lower nozzle, and a center location in the array reserved for instrumentation. The lower Inconel end grid is mechanically attached to the guide thimble lower end plug; the end plug is threaded and bolted to the lower nozzle. The upper Inconel end grid is restrained by twenty-four (24) sleeves welded to the grid. These sleeves surround the guide thimbles and react against the lower surface of the upper nozzle. Six (6) Zircaloy intermediate grids create the 17x17 lattice array; these grids are not rigidly attached to the guide thimbles, but remain free to move upward with the fuel rods as the rods grow due to irradiation. Excessive movement of the grids under hydraulic loading is controlled by eight (8) ferrules attached to selected guide thimbles, plus the instrument tube, at each grid elevation. This design feature reduces the compressive stresses in the guide thimbles thereby reducing guide thimble distortion that can affect control rod insertion.

The end grids and intermediate grids utilize a keying feature that compresses the contacting spring during fuel rod insertion at the time of

manufacturing. This keying action allows fuel rods to be inserted without excessive loading and without scratching.

The guide thimbles have two diameters – a larger diameter at the top provides a relatively large annular clearance that permits rapid insertion of the rod cluster control assembly (RCCA) during a reactor trip and accommodates coolant flow during normal operation. The reduced diameter section, the dashpot, located at the lower end of the guide thimble, provides a relatively close fit with the RCCA rodlets to decelerate the RCCA near the end of its travel. The deceleration limits the impact loads on the top nozzle. Four (4) small holes located just above the dashpot allow both outflow of water during RCCA insertion and coolant flow into the tube during normal operation to cool the control component. A small hole in the guide thimble bolt provides a flow path for the lower section of the guide thimble.

A.1.2 Spacer Grids

The primary features of the Mark-BW/MOX1 spacer grids are illustrated in Figure A-2. At each fuel rod location a combination of springs (softstops) and dimples (hardstops) acting in two orthogonal planes support each rod. All spring and dimple edges are bent inward to resist scratching of fuel rods during loading. Tight control of dimple and spring heights ensures a constant, uniform rod pitch and fuel rod restraint load. Each guide and instrumentation thimble cell features saddles and scallops to facilitate loading and support of the thimbles. A laser weld performed at each strip intersection on both faces of the assembled grid secures the strips. To ensure high quality and consistency, robotic equipment is used to laser weld the strip end tabs. Grid strip height and thickness are optimized to meet crush and impact strength, pressure drop and dimensional requirements.

Mixing vanes are incorporated on the trailing edges of five (5) intermediate grids used in the high heat flux region of the core. The vanes improve the heat transfer characteristics of the grid/assembly. The lowest intermediate grid does not have vanes to reduce the overall fuel assembly hydraulic resistance.

A.1.3 Mid-Span Mixing Grids

Mid-Span Mixing Grids (MSMG's) are non-structural components installed at the mid-span between the top four intermediate vaned grids to promote improved heat transfer. The MSMG is an optional component on the base Mark-BW and is currently operating on four Lead Test Assemblies at North Anna. For hydraulic compatibility with the resident fuel design in operation at the time of insertion, the MSMG's are expected

to be incorporated on the Mark-BW/MOX1 to be used at the McGuire and Catawba reactors of Duke Power.

The primary features of the MSMG are shown in Figure A-3. Stops formed in each of the four cell walls prevent the fuel rods from contacting the mixing vanes but impose no grip force (slip load) onto the rods. The outer strips incorporate a wrap-around corner design to improve the corner handling interface. To minimize the effect of the MSMG on pressure drop the grids are made from strips that are thinner than the standard strips; also, the grid height is less than the intermediate grid. The overall envelope dimensions of the MSMG are reduced to eliminate grid interaction with adjacent fuel assemblies during transition fuel cycles.

The mixing vanes on the MSMG are the same design and pattern utilized on the Mark-BW intermediate spacer grid. The MSMG's are attached to the guide thimbles by restraint sleeves that are welded to the top of the grid straps. These restraint sleeves are then mechanically attached to selected guide thimbles by dimpling.

A.1.4 Nozzle Design

The Mark-BW/MOX1 fuel assembly utilizes the same removable top nozzle (Figure A-4) found on the Mark-BW fuel assembly to facilitate rod removal and reconstitution, if necessary. The design incorporates a threaded nut with a deformable locking cup. The top nozzle contains four sets of leaf springs (four leaves per set for MSMG applications, three leaves per set for non-MSMG applications) made of precipitation hardened Inconel 718 alloy fastened to the nozzle with preloaded Inconel 718 bolts. The upper leaf has an extended tongue that engages a cutout in the top plate of the nozzle to ensure spring leaf retention in the unlikely event of a spring failure. There have been no spring failures in a Mark-BW assembly.

The bottom nozzle design (Figure A-5) incorporates a fine mesh filter plate concept to achieve a high level of debris resistance. The Trapper™ design has a stainless steel structural frame of deep ribs connecting the guide thimble locations, with conventional legs for interface with the reactor internals. The frame distributes the primary loads on the fuel assembly through the bottom nozzle. A high strength A286 alloy filter plate is attached to the top of the frame by pins welded at the four corners. The filter plate is 0.118 inch thick with a mesh of approximately 9000 holes 0.055 inch square.

During bundle assembly the fuel rods are placed in contact with, or 'seated' on, the bottom nozzle. Seated fuel rods provide a direct load path to the bottom nozzle which allows the majority of the fuel assembly

weight and holddown loads to be distributed across the surface of the bottom nozzle by the fuel rods instead of being carried through the assembly structure. This feature also produces a lower component pressure drop and provides more predictable, linear fuel assembly growth.

A.1.5 Fuel Rod Design

The fuel rod design, shown in Figure A-6, consists of UO_2-PuO_2 (MOX) fuel pellets contained in a seamless M5™ alloy tube with end plugs welded at each end. The design utilizes a 144.0 inch stack length made up of 95% theoretical density MOX fuel pellets. The fuel pellets have a length of 0.4 inch and a diameter of 0.3225 inch. The fuel rod cladding has a 0.374 inch outside diameter and 0.0225 inch wall thickness. This configuration leaves a small (approximately 0.003 inch radial) clearance between the inside diameter of the cladding and the outside surface of the pellets. The rod utilizes one stainless steel spring in the upper plenum to prevent the formation of fuel stack gaps during shipping and handling, while also allowing for the expansion of the fuel stack during operation. The fuel stack rests on the lower end plug, which has a taper to provide a smooth flow transition in addition to facilitating reinsertion of the rods into the assembly if any rods are removed after the fuel has been irradiated. The upper end plug has a grip-able top hat shape; in conjunction with the removable top nozzle, this grip-able fuel rod end plug allows for easy removal of fuel rods following irradiation. This feature has been proven through irradiated rod removal operations at the mission reactors in support of fuel examinations and failed rod replacement. A hole in the upper end plug permits evacuation and back-filling of the fuel rod with high pressure helium gas prior to sealing.

The fuel pellets are a sintered ceramic of 95% Theoretical Density (TD) UO_2-PuO_2. The pellets are cylindrically shaped with a spherical dish at each end. The corners of the pellet have an outward land taper (chamfer) that eases the loading of the pellets into the cladding. The dish and taper geometry also reduces the tendency for the pellets to assume an 'hourglass' shape during operation.

A.1.6 Fuel Rod Cladding

The Mark-BW/MOX1 fuel rod design utilizes an advanced, corrosion-resistant, zirconium-niobium alloy (M5™) for fuel rod cladding. M5™ cladding has demonstrated significant margins for corrosion, clad creep, hydriding, and growth. Corrosion performance, compared to that of Zircaloy-4, is shown in Figure A-7. The improved cladding performance will provide more margin for the fuel cycle designers and will contribute to resolution of potential RIA concerns. Experience with M5™ cladding worldwide is shown in Table A-2.

A.1.7 BPRA Design

The 17x17 BPRA (Figure A-8) consists of an arrangement of poison rods and thimble plugs suspended from a flat plate and held in place by a spring-loaded holddown assembly. The holddown assembly fits within the fuel assembly upper nozzle and rests on the adapter plate. To ensure that the cluster remains seated in the fuel assembly during operation, the holddown springs are compressed by the upper core plate, thereby providing a downward force in excess of the hydraulic lift forces from the coolant. The holddown assembly is made of 304 stainless steel, and the holddown springs are Inconel 718.

The burnable poison rod design contains a 132 inch long absorber stack of variable weight % Al_2O_3-B_4C pellets. The pellets are encased in cold-worked, stress relieved annealed Zircaloy-4 cladding with Zircaloy-4 end plugs welded to each end. The upper end plug provides a threaded attachment to the holddown assembly plate, and a bullet nose lower end plug provides lead-in guidance for the rods. A stainless steel spring, located in the plenum above the poison column, prevents gross movement of the pellet column during shipping and handling. Prior to the final seal weld, each rod is pressurized with helium to reduce the pressure differential across the clad wall during operation.

The pellets consist of a uniform sintered dispersion of boron carbide (B_4C) in an alumina (Al_2O_3) matrix. The boron-10 concentrations are adjusted by varying the boron carbide content of the pellets.

As noted in Section 7.1.1.9 this BPRA design is fully qualified and has successfully operated in all four mission reactors.

A.2 Qualification Testing

The base design for the Mark-BW/MOX1 is fully qualified for UO_2 applications. The qualification of the design included lead test assembly irradiations and extensive out of reactor testing. These tests are fully applicable to the MOX version of the design; no changes to the external dimensions or interfaces will be made in accommodating the MOX pellets.

The out of reactor testing performed to support qualification of the Mark-BW include prototype mechanical tests as well as full scale prototype tests at full reactor operating conditions. Table A-1 contains a summary of the testing performed in support of the Mark-BW qualification. This testing is directly applicable to the Mark-BW/MOX1 design; no changes are being made that will affect the validity of these tests.

The testing included a full scale Mark-BW prototype that was subjected to a series of thermal/hydraulic, environmental and mechanical characterization tests in a single bundle, high temperature pressurized loop. The assembly was characterized by pressure drop and spacer grid laser Doppler velocimeter (LDV) tests. The environmental, or life-and-wear, tests consisted of exposing the fuel assembly to representative reactor conditions of temperature, pressure and flow for two 500 hour periods. The fuel assembly exhibited no significant corrosion or wear. Control rod trip testing was also performed as part of the test sequence. Subsequent in reactor testing and operation have confirmed the excellent operational performance of the Mark-BW design.

A second full-scale prototype test was conducted in a two-assembly flow loop to evaluate the flow-induced-vibration (FIV) performance in a high crossflow configuration. Mark-BW prototypes, with and without MSMG's were tested in adjacent positions to simulate the worst case hydraulic mismatch encountered in transition cores. Testing demonstrated excellent performance; operational performance has confirmed this result.

A.3 Operating Experience

The Mark-BW operating and burnup experience is summarized in Figure 7-2.

A.3.1 Total Experience Base

For Westinghouse-designed reactors, FRA-ANP (US) began delivery of fuel assemblies in 1987 to Duke Power Company's McGuire Nuclear Station. Currently the base Mark-BW fuel assembly is operating in the U.S. in six Westinghouse-designed reactors: Duke Power Company's Catawba Units 1 and 2, and McGuire Units 1 and 2; and TVA's Sequoyah Units 1 and 2. Four lead test assemblies of the Advanced Mark-BW, with MSMGs and M5™ cladding and guide thimbles, are currently in operation at a seventh plant, Virginia Power's North Anna Power Station. An eighth plant, Portland General Electric's Trojan Plant, also operated with FRA-ANP (US) fuel. As of August 1999, FRA-ANP (US) has supplied nearly 2,300 fuel assemblies to the 17x17 reactors.

A.3.2 Operational Experience in Mission Reactors

The base Mark-BW design is currently in operation in all four of the mission reactors. Since 1991, FRA-ANP (US) has delivered 25 batches of Mark-BW fuel to Duke Power's four units at McGuire and Catawba.

A.4 Compatibility

Compatibility issues are discussed with respect to the Mark-BW/MOX1 assembly.

A.4.1 Mechanical Compatibility

The Mark-BW/MOX1 fuel assembly will be fully compatibility with the current mission reactor mechanical interfaces, including:

- Compatibility with core internals
- Compatibility with control components
- Compatibility with resident fuel
- Shipping and handling compatibility

Analyses will be performed to demonstrate compatibility of the Mark-BW/MOX1 design with the resident fuel to be in core at the time of the lead assembly irradiation at McGuire and the batch implementation at all of the mission reactors.

FRA-ANP (US)'s successful reload transition experience also demonstrates the ability to assure full compatibility of the Mark-BW/MOX1 assembly. This experience includes the successful supply and operation of 12 LTAs and 23 batches of fuel to eight different reactors, totaling over 2300 Mark-BW fuel assemblies.

Additional confirmation of compatibility with shipping and handling interfaces will be obtained through the fabrication, shipment, and delivery of a Mark-BW/MOX1 dummy assembly from the lead assembly fabrication site to McGuire Unit 2, as part of the trial run of these interfaces.

A.4.2 Thermal-Hydraulic Compatibility

The Mark-BW fuel assembly, on which the Mark-BW/MOX1 is based, was designed specifically for mechanical and thermal-hydraulic compatibility with both the Westinghouse LOPAR and OFA fuel designs, which also ensures compatibility with the VANTAGE-5 and PERFORMANCE+ designs. Experience with lead test assemblies at North Anna has also demonstrated compatibility with the Westinghouse VANTAGE-5H design. Thus, the compatibility evaluations previously performed for the Mark-BW design will be applicable to the Mark-BW/MOX1 design relative to the Westinghouse fuel designs projected to be in operation as the resident fuel in the mission reactors.

Figure A-1 Mark-BW/MOX1 Fuel Assembly

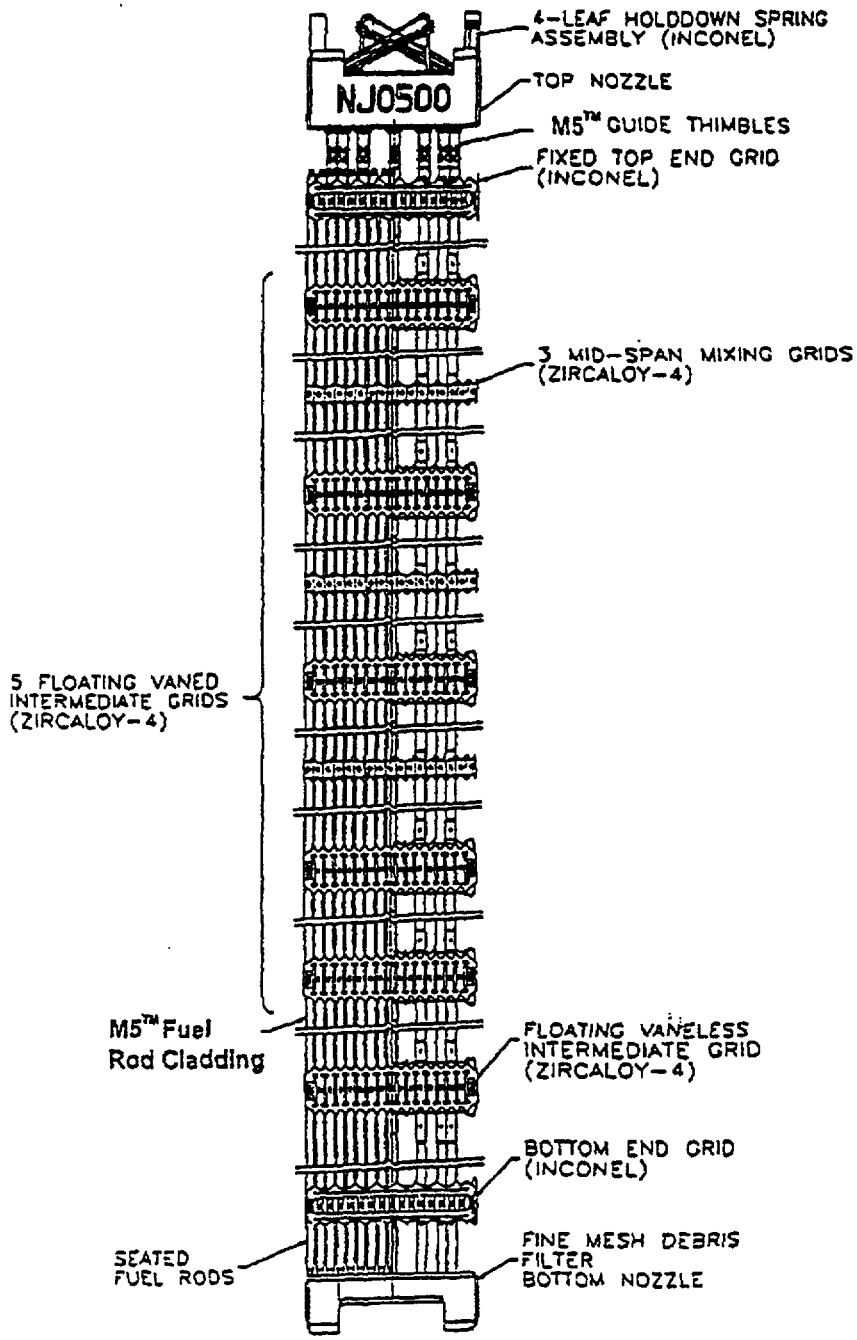

Figure A-2 Mark-BW/MOX1 Zircaloy Intermediate Spacer Grid Features

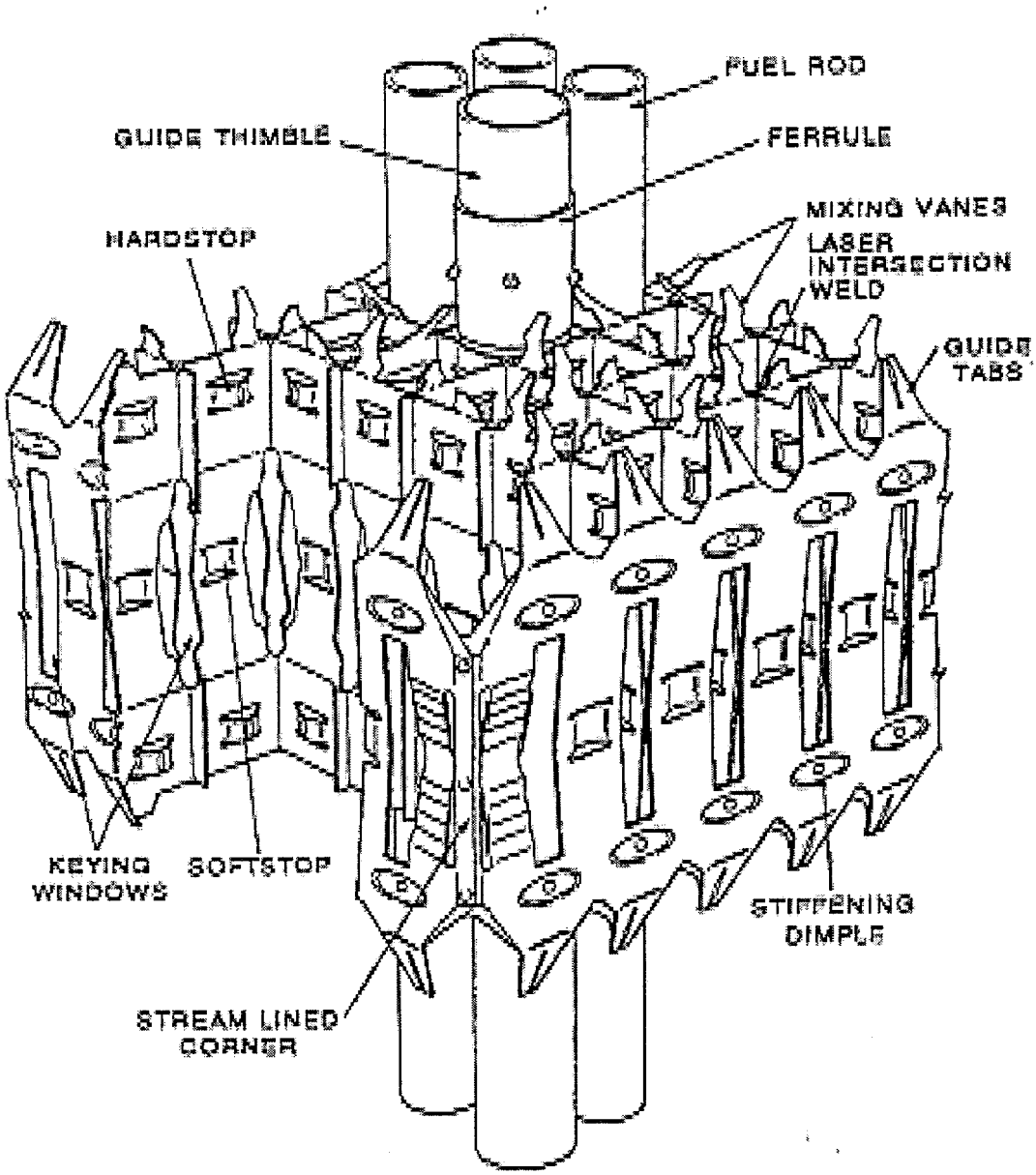

Figure A-3 Mark-BW/MOX1 Mid-Span Mixing Grid Features

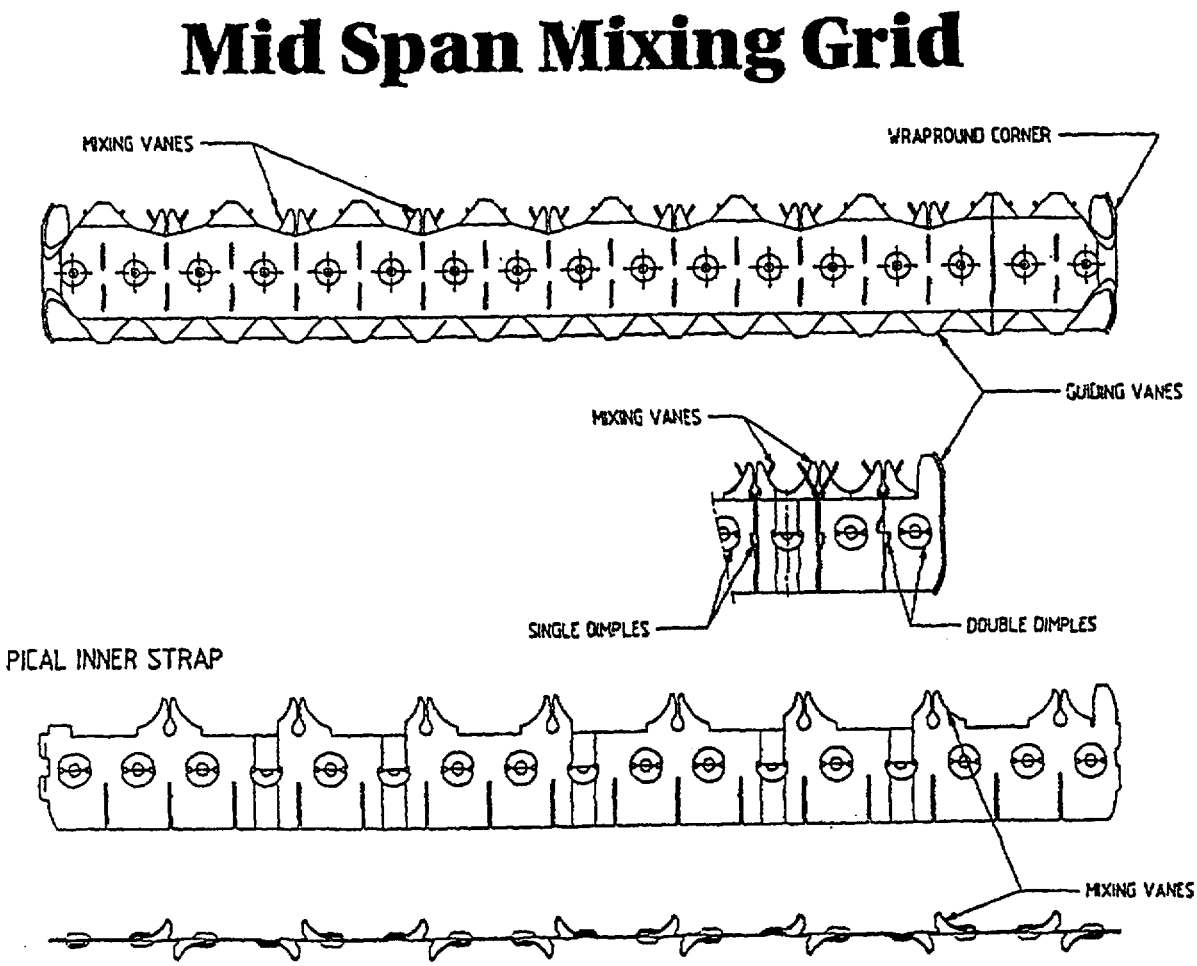

Figure A-4 Mark-BW/MOX1 Upper Nozzle

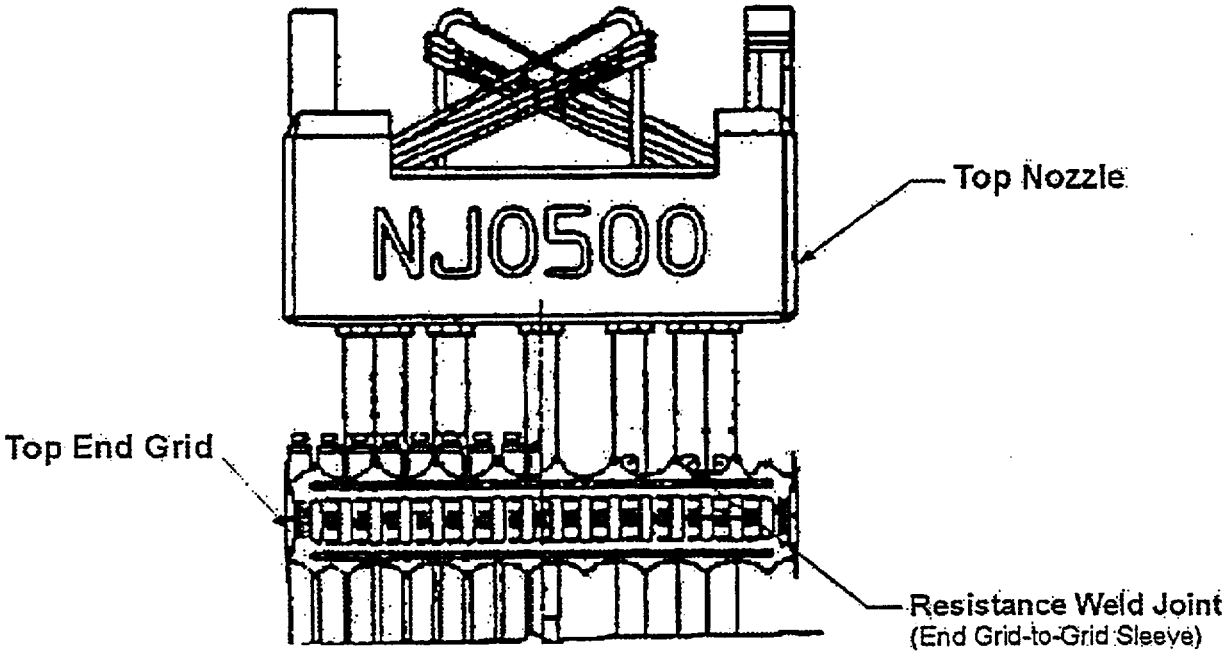

Figure A-5 Mark-BW/MOX1 Lower Nozzle

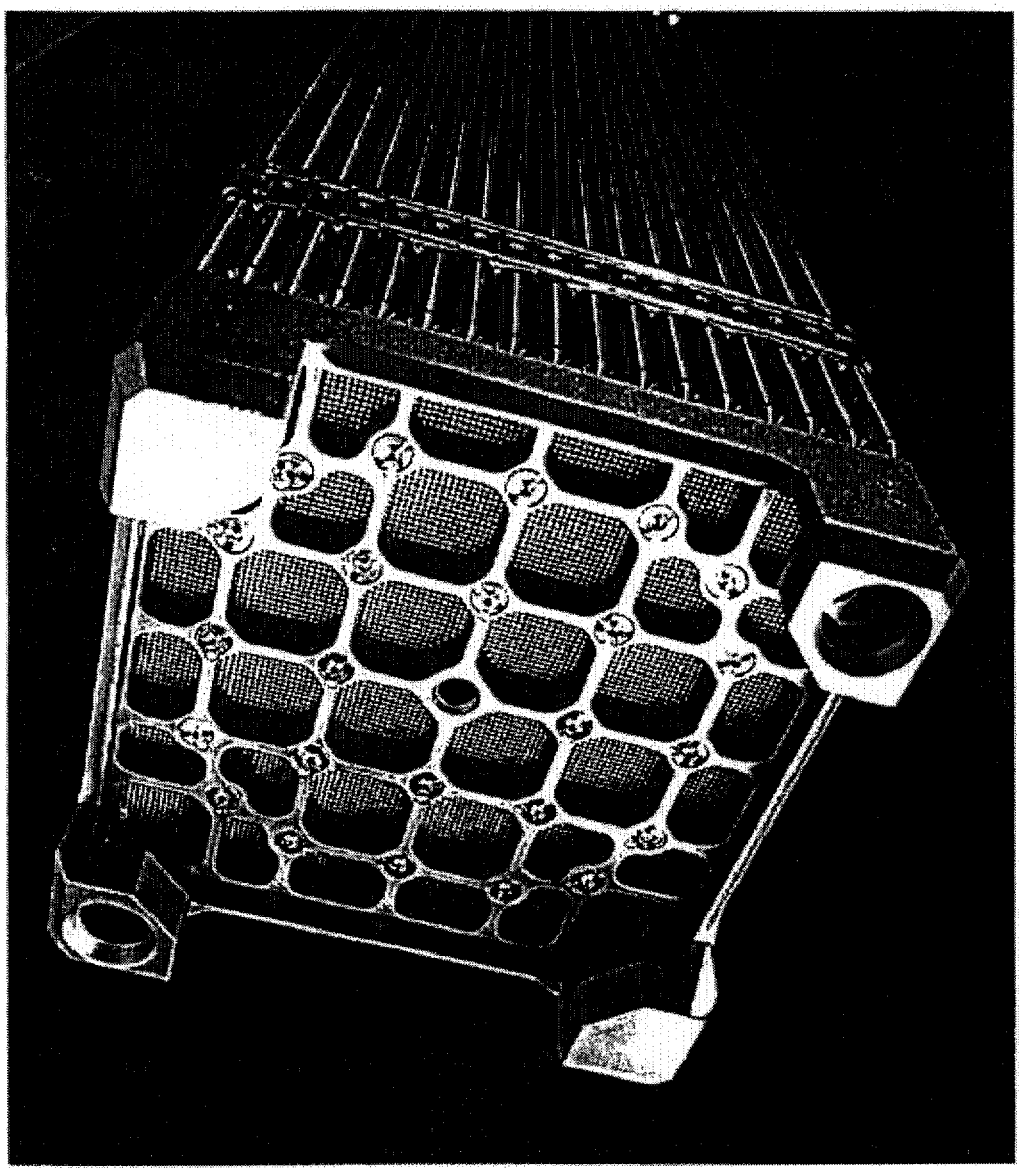

Figure A-6 Mark-BW/MOX1 Fuel Rod Design

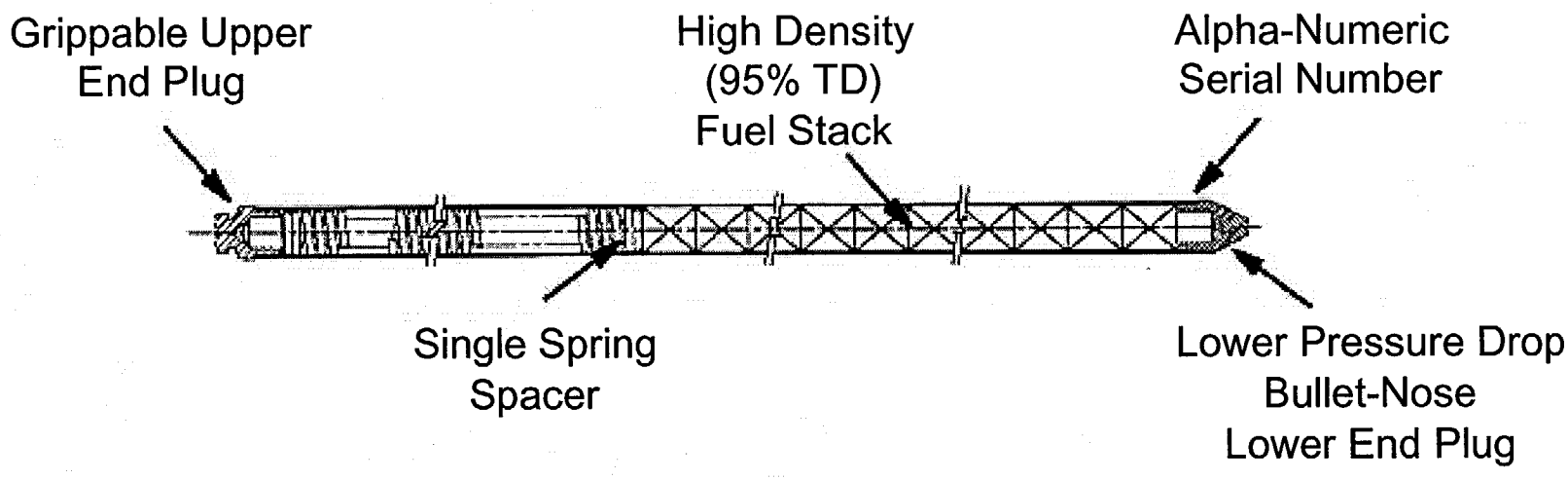

Figure A-7 Cladding Corrosion

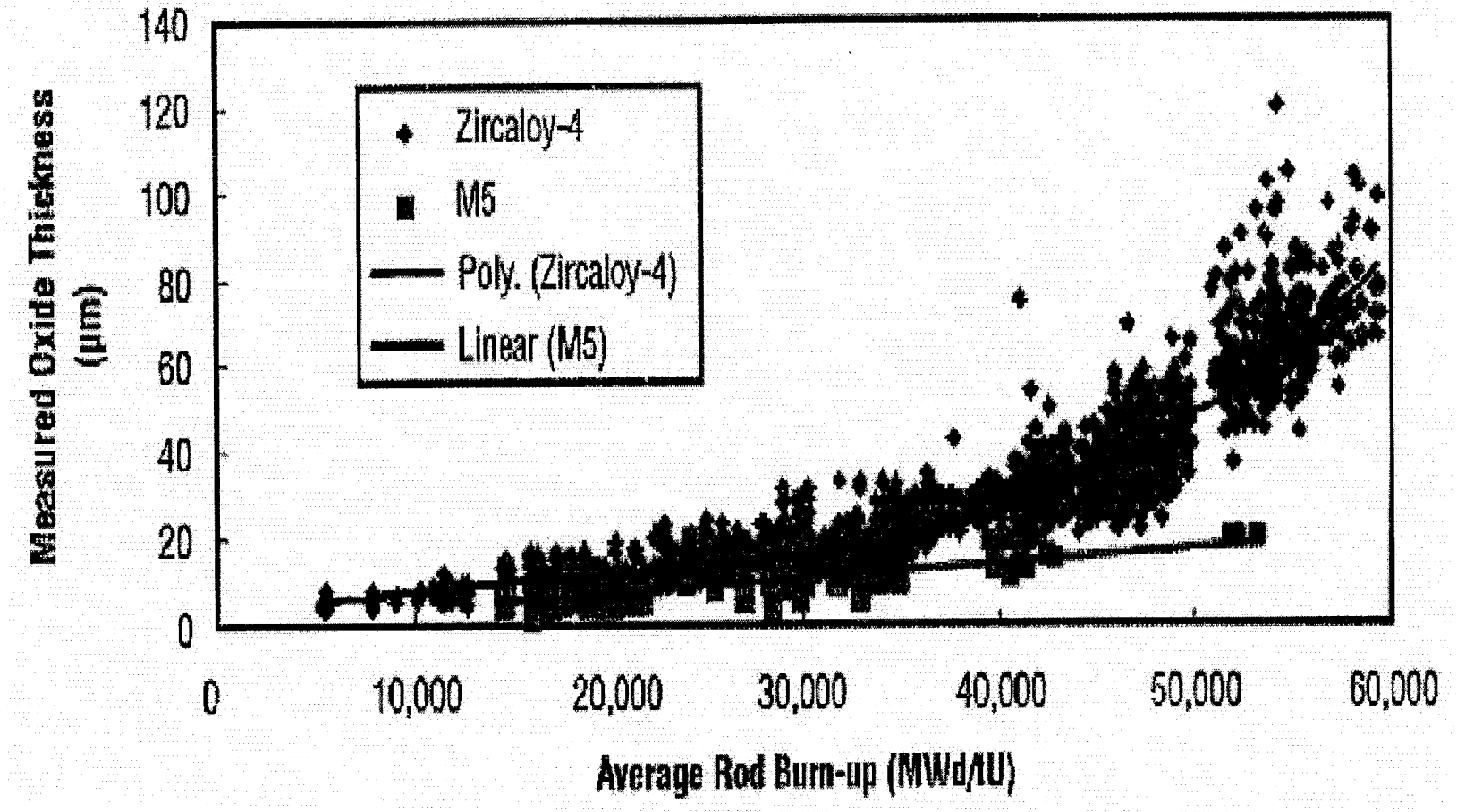

Figure A-8 BPRA Design

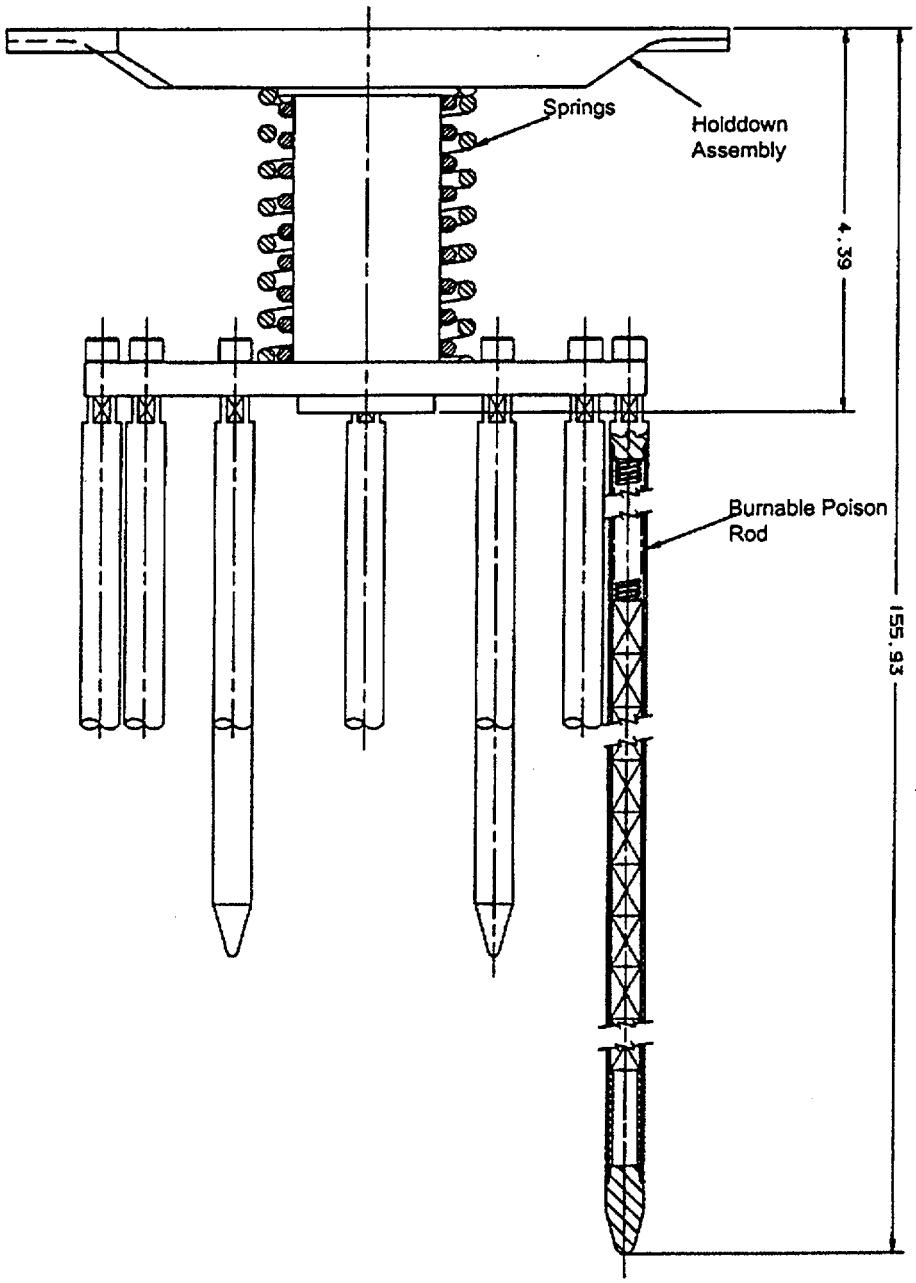

Table A-1 Mark-BW Qualification Testing

TEST	INFORMATION OBTAINED
FA Prototype Static Axial Compression Test	- FA axial stiffness under compression - FA stability - GT load distribution - GT stresses
FA Prototype Static Lateral Bending Test	- FA lateral stiffness - GT stresses
FA Prototype Natural Frequency & Mode Shape Test ("Shaker")	- FA first six natural frequencies and mode shapes - FA damping
FA Prototype Lateral Pluck W/O Impact Test	- FA frequency and damping versus displacement amplitude
FA Prototype Lateral Pluck w/ Impact Test	- FA Spacer Grid internal stiffness and damping - FA Spacer Grid impact force versus displacement
FA Prototype Axial Drop Test	- FA impact force versus displacement - FA impact force versus impact velocity - GT stresses
FA Prototype Axial Tension Test	- FA axial stiffness under tension - GT load distribution - GT stresses
FA Spacer Grid Static Crush Test	- SG static crush load to cause failure - SG elastic spring rate - SG failure mode - SG crush and recovery height
FA Spacer Grid Dynamic Crush Test	- SG dynamic crush load to cause failure - SG damping - SG post-buckling behavior
FA HD Spring Compression Test	- HD Spring load/deflection characteristic - Max. HD Spring deflection - Max./Min. HD loads
FA ΔP Test	- FA Pressure Drop
FA Prototype Life and Wear Test	- FA 1000 Hour Endurance - Corrosion & Wear - RCCA Drop Times - Endurance under RCCA Stepping/Stroking
FA Flow-Induced Vibration Test	- Flow-induced behavior of prototype X1 and Mark BW fuel assemblies
Bottom Nozzle Tests	- Bottom Nozzle Pressure Drop - Bottom Nozzle Debris Filtering Effectiveness

Table A-2 Summary of M5™ Irradiation Experience

Location	Array	No. of Plants	Core Average Linear Power (W/cm)	Burnup Achieved (MWd/ MTU)	T_{inlet} (°F)	T_{outlet} (°F)	Max Coolant Temp (°F)	Max Heat Flux (W/cm^2)
EUROPE	17x17	7	170-186	63,000	549-552	612-615	630.5	78
USA	17x17	2	178	40,000	558	622	636.8	78
EUROPE	14x14	1	220	50,000	545	601	615	84
EUROPE	15x15	1	238	1st Cycle	543	612	-	-
USA	15x15	1	190	13,000	556	606	-	-
EUROPE	16x16	4	207-211	42,000	556	622	649.6	91
EUROPE	18x18	2	166	48,000	556	621	646.3	82

Number of M5™ rods irradiated – 10,000

Number of utilities – 10

Maximum burnup achieved – 63,000 MWd/MTU

This Page
Intentionally Left Blank

Appendix B DOMESTIC MOX EXPERIENCE

Prior to the U.S. policy decision in 1977 to defer indefinitely the commercial reprocessing and recycling of plutonium there were a number of developmental programs completed that demonstrated the technical feasibility of MOX fuel. However, only minimal PWR demonstration irradiations were completed, and no batch experience was obtained. Thus, the MOX experience available from U.S. programs is limited relative to the data available from Europe.

Following is summary of the domestic programs, most performed prior to the decision to defer plutonium reprocessing in the U.S. Additional information is available in Reference 25, Chapter 3. Also included is the current Idaho National Engineering and Environmental Laboratory (INEEL) Advanced Test Reactor (ATR) test of MOX representative of WG plutonium. Except for this INEEL test, the limited domestic information forces reliance on the European experience.

B.1 Saxton

The Saxton Plutonium project produced the first information on the basic characteristics of MOX fuel in the mid-1960's. Nine MOX assemblies in the core consisting of a total of 21 fuel assemblies produced irradiated fuel rods for hot cell examination. The isotopic composition of the MOX fuel was representative of the fuel to be made from WG plutonium and irradiated in the mission reactors. Pellet restructuring was found to be limited, PCI was not evident and densification of the MOX fuel occurred during irradiation as expected. The overall performance of the MOX fuel in Saxton was similar to UO_2 fuel and was satisfactory.

B.2 Commercial LWR Irradiations

Commercial reactor irradiations were conducted at Dresden, Quad Cities, San Onofre, and Big Rock Point under a program sponsored by the Electric Power Research Institute (EPRI) and fuel vendors. Post irradiation examinations concluded that MOX fuel performance was similar to UO_2 fuel performance in commercial LWR's. The differences noted between MOX and UO_2 consisted of the reactivity effects, including reactivity control, and decay heat. In addition, four (4) MOX assemblies were irradiated at RGE's Ginna reactor to a burnup of 40,000 MWd/MThm, with no failures.

It should be noted that the U.S. commercial MOX fuel irradiation programs tended to use high fissile content plutonium that was made available by the Atomic Energy Commission. For example, the Ginna fuel was reported to be approximately 83% fissile plutonium, and the San Onofre MOX was 86% fissile plutonium.

B.3 GETR Tests

Studies of pellet densification behavior of MOX fuel were conducted in an EPRI sponsored program, with irradiation in the General Electric Test Reactor (GETR). It was determined that MOX fuel shows similar densification behavior to UO_2 fuel, and the presence of up to 6 wt% plutonium and particle sizes up to 500 microns did not affect the physical behavior of the fuel.

B.4 INEEL ATR Tests

MOX fuel irradiation experiments are currently being conducted in the Advanced Test Reactor (ATR) at the Idaho National Engineering and Environmental Laboratory (INEEL). These tests are the first irradiation of MOX fuel derived from actual weapons grade plutonium. The tests and the test hardware were designed by the staff at Oak Ridge National Laboratory (ORNL), where the post irradiation examinations are in progress. The MOX fuel pellets for the tests were fabricated by Los Alamos National Laboratory (LANL).

The Average Power Test (APT) began irradiation in January 1998 with two types of MOX fuel: the first fuel type was untreated relative to impurities and contained a gallium concentration of 3.0 parts per million (ppm) in the as-fabricated pellet; the second fuel type was thermally treated to reduce the impurities and contained gallium at the 1.3 ppm level in the finished pellet. Both fuel types contain gallium at significantly higher levels than the proposed mission reactor fuel. The mission reactor fuel will utilize aqueous polishing which is expected to reduce gallium concentrations to less than 120 parts per billion (ppb) in the feed plutonium powder.

The test rods have operated up to 29,640 MWd/MThm at heat rates of 5-10 kW/ft. The burnups are projected to reach 50,000 MWd/MThm during future irradiation cycles. The post irradiation examinations are aimed at determining the effects of gallium from the WG plutonium on fuel rod performance. Capsules have been withdrawn from the reactor at 8,360, 21,000, and 29,640 MWd/MThm for examination. To date, performance of the test capsules has been good with no anomalous effects.

Appendix C

WORLDWIDE MOX EXPERIENCE

International analytical programs to evaluate performance of MOX fuel relative to that of UO2 fuels have been carried out over a period of 35 years. These programs are ongoing and are providing the data necessary to compare MOX fuel performance with UO_2, to develop specific models for MOX fuel performance, and to verify code performance. Additional information is available in Reference 25, Chapter 4.

C.1 Canada

Research and development activities on Pu-containing fuel have been conducted by Atomic Energy of Canada Limited (AECL) at its Chalk River Laboratories (CRL) site since 1960, and they remain a strategic part of AECL's advanced fuel cycle program.

Several fabrication campaigns have been conducted in the Recycle Fuel Fabrication Laboratories (RFFL), producing various types of MOX fuel that were used for both irradiation and physics testing. Recently, CANDU fuel bundles containing 0.5 wt% plutonium in natural uranium were successfully irradiated in the NRU reactor at powers up to 650 W/cm and to burnups ranging from 13,000 to 23,000 MWd/MThm. Two of the bundles had power histories that bound the normal powers and burnups of natural UO_2 CANDU fuel. These bundles exhibited sheath strain and fission gas release typical of those observed in similarly operated UO_2 fuel. Burnup extension above 15,000 MWd/MThm had only a small effect on fission gas release. (Reference 18)

C.2 Germany

In Germany, two sets of test irradiation programs in support of thermal MOX were performed. The first, in the 1970's, utilized MOX fuel fabricated using a process which resulted in poor homogeneity giving rise to solubility problems. The second set of test irradiations, carried out during the 1980s and early 1990s, concentrated on the irradiation verification of modern MOX fabricated using the Optimized CO-Milling (OCOM) process (Reference 19). These two programs are summarized in Table C-1.

The initial test of the second program utilized 15 segmented long fuel rods with 7 short rods. Rods were irradiated up to 4 cycles. The short rods were axially reduced rods modified in length to match the thermal flux field of the High Flux Reactor (RFR) pool facility at Petten and thus allowing simultaneous power increase of the whole rod. In total, 12 short rods with modern MOX fuel have been transient tested. MOX fuel manufactured using both the OCOM and Ammonium Uranyl-Plutonyl Carbonate (AUPuC) processes have also been included in this program. The tests have shown that despite different powder

properties, the results were comparable due to the fact that the two manufacturing processes were optimized with respect to Pu homogeneity. In addition to the segmented rods, demonstration fuel assemblies were manufactured and extensively characterized before irradiation. Included in one of these assemblies was some experimental fuel containing a reduced Pu content of 15% in the agglomerates. This fuel was irradiated to a local burnup of 45,000 MWd/MThm and was designed to study the influence of Pu homogeneity on irradiation behavior (Reference 20).

C.3 Japan

The Japan Nuclear Cycle Development Institute (JNC) has developed MOX fuel for thermal reactors over more than 30 years. As a part of this development, JNC conducted various irradiation tests of MOX fuels in thermal reactors such as 'Fugen' and Halden HBWR (Reference 21). See Table C-2 for a summary of these programs.

MOX fuel properties such as fission gas and helium release, microstructure, densification and swelling were thoroughly monitored up to high burnup. These data were useful for the development of the MOX fuel performance code FEMAXI-ATR.

A series of power ramp tests on Fugen MOX fuel segments exposed up to 22,000 MWd/MThm revealed a failure threshold higher than that reported for UO_2 BWR fuel. Fugen MOX fuel rods were also subjected to power cycling irradiation simulating a daily load follow operation. In the tests PCI was induced by the power cycling. However, diameter measurement and fuel instrumentation confirmed that cladding deformation by PCI was immediately relaxed and that there was no mechanical effect due to repeated power changes.

C.4 Norway (Halden)

The OECD Halden Reactor Project (HRP) has defined an extensive experimental program related to MOX fuels that is being executed with the objective of providing a performance base similar to that available for UO_2 fuel (Reference 22).

In addition to utilizing fresh MOX fuel and re-instrumented segments from LWR irradiations to high burnup, the concept of inert matrix fuel is being addressed. The irradiation in the Halden reactor is performed in rigs allowing steady state, power ramping and cyclic operation. In-pile data are obtained from instrumentation such as fuel centerline thermocouples, pressure transducers, fuel and cladding elongation detectors, and movable gauges for measuring the diametral deformation.

The scope of the overall joint program for MOX testing includes:

- Collect data on basic thermal performance from low to high burnup, including assessments of changes in conductivity.
- Assess fission gas release and release kinetics.
- Derive information on fuel swelling and densification through evaluation of temperature data and pressure changes as a function of burnup.
- Obtain data on PCI behavior and fuel relaxation capabilities.
- Explore the rod over-pressure/clad lift-off effect for high burnup fuel.
- Produce high burnup (>65,000 MWd/MThm) MOX fuel through continued irradiation in the Halden reactor under PWR conditions and provide performance data (temperature, fission gas release, PCI) for this burnup.
- Assess the in-core behavior of fuel where plutonium is carried in an inert matrix, thus avoiding the generation of new Pu and allowing a more complete burning.

C.5 United Kingdom

BNFL is currently involved in a number of in-pile irradiation programs of Short Binderless Route (SBR) process MOX fuel that includes both PWR and BWR designs (References 23 and 24). These tests incorporate a large amount of in-pile rod instrumentation designed to determine the thermal, dimensional and fission gas release behavior of SBR MOX fuel under well-controlled conditions. The data from these tests demonstrate the satisfactory performance of the SBR MOX fuel to burnups in excess of 70,000 MWd/MThm.

The most recent in-pile test to be undertaken by BNFL started in 1999 and is designed as a comparative study of the fission product release behavior of SBR MOX and standard UO2 fuel. The experiment is highly instrumented and is providing data on stable and unstable fission gas release, thermal performance, fuel densification, fuel swelling, and pellet cracking and relocation.

Table C-1 German Irradiation Test Programs

Reactor	Scope of Work	Description
KWO	Power Transients	• 14 Short Test Rods • Maximum Powers between 260 and 417 W/cm • Rod Burnups – 9 to 27 GWd/MThm
HFR Petten	Power Transients	• Short Rods Pre-Irradiated in KWO • Ramp Terminal Powers – 480 to 560 W/cm • Rod Burnups – 9 to 32 GWd/MThm
Halden BWR	Instrumented Irradiations to Determine Fuel Temperature and Densification	IFA 427, 428

Year	Rod/FA Number	Type of Fuel	Rod Burnup (GWd/MThm)	Transient Testing
1980	Segmented Rods	AUPuC	23-29	HFR Petten
1981	Reactor A/FA 1	OCOM/AUPuC	6-42	
1984	Reactor A/FA 2	OCOM	9-34	HFR Petten
1986	Reactor A/FA 3	OCOM-30 and –15	8-41	

Table C-2 Japanese Irradiation Test Programs

Irradiation Test	Maximum Pellet Burnup (GWd/MThm)	Maximum Power (W/cm)	Pu Fissile Content (Wt%)	MOX Powder
HBWR				
IFA-514	56	460	4.6	MB
IFA-529	34.7	440	6.0	MB/MH
IFA-554/555	34.4	560	3.4	MB
IFA-565	65	460	4.6	MB
Fugen				
DATA – type	40.3	445	1.0-2.5	MH
Segment – type	32.6	290	1.5-3.0	MH
Gd2O3 – type	49.2	457	1.5-3.9	MH
Standard – type	24.4	498	0.55-1.56	MB/MH

This Page
Intentionally Left Blank

Appendix D

MOX PELLET SPECIFICATION

SUMMARY

The following criteria have been established for the WG MOX pellet attributes. These criteria are based on a combination of the current FCF UO_2 pellet specification, the ASTM MOX pellet specification and the Framatome MOX pellet specification.

ATTRIBUTE	LIMITS AND COMMENTS
Pellet Dimensions	Details defined on drawing
Density	95 +/-1.5% theoretical. The theoretical density varies as a function of PuO_2 content. The theoretical density of UO_2 is 10.96 g/cm^3; theoretical density of PuO_2 is 11.46 g/cm^3.
Surface Appearance	100% inspection for defects (cracks, chips, capping, etc.). Acceptance criteria in accordance with European practice. Surface finish to meet 100 microinch RMS max.
U, Pu content	As defined for each batch
Isotopic contents	As defined for each batch
O/M ratio	Range (Calculated as O/(U + Pu + Am) is 1.98 to 2.01.
Impurities	1500 ppm max.value for sum of all following impurities: -Fe, Ni, Cr, Al, Ca, C, N, Cl, F, Zn, B, Cd, Dy, Eu, Gd, Mg, Mo, Sm, Si, Th, Ti, W. Individual ppm limits of Al - 250, Si - 250, Fe - 500, F - 15, C - 100, N - 75, Th - 10, Cl - 25. Ga content to be controlled on the PuO_2 powder on a lot basis (to achieve < 120 ppb in the feed PuO_2 powder, based on maximum1.2% gallium prior to polishing).
EBC	2.50 ppm max. Equivalent Boron Content based on above impurities

Hydrogen	1.30 ppm max. UTL
Resinter Test	Density increase between 0.0 % TD and 1.7 % TD based on standard 24 hour test defined in Reg. Guide 1.126 adjusted to maintain pellet stoichiometry.
Sorbed gas content	0.01 cc/gm max.
Loadability Test	Stacks of 10 pellets loaded axially to withstand 60lb minimum load without chipping. (Verifies pellet design for fuel rod loading – performed for process/design qualification only).
Grain Size (mean)	Greater than 4 μm
Plutonium rich particle size	At least 95% of the plutonium rich particles shall have an effective diameter of less than 100 μm. The mean plutonium rich particle distribution shall be less than 50 μm. No pure plutonium grain shall be greater than 400 μm.
Pore Size	Within agreed Process Control Limits.