CALCULATION TITLE PAGE

CALCULATION NUMBER: PSAT 206CT.QA.01.10

CALCULATION TITLE: Offsite and Control Room Dose Calculation for Energy Northwest's Columbia Generating Station using the Alternate Source Term and RADTRAD Methodology

	ORIGINATOR Print/Sign/Date	CHECKER Print/Sign/Date	IND REVIEWER Print/Sign/Date
REV: 0	J. Metcalf	F. Hennion	D. Leaver
[1]	J. Metcalf	F. Hennion	D. Leaver
2			

REASON FOR REVISION: Nonconformance Rpt

Revision 0:
Initial Issue N/A

Revision 1:
Revised calculation due to change in offsite X/Qs (especially Section 5.7, and Appendices A, C, D and K)
Deleted Reference 3
Added Assumptions 1 and 2
Clarified Section 3.3 insofar MSIV leak rates are concerned
Added reference to justify the mathematical expression of U_{ei} in Section 3.3.2, and U_{oi} in Section 3.3.3
Added Appendix L
Revised Attachments 1 and 4

Table of Contents

	Page
Purpose	3
Methodology	3
Assumptions	3
References	4
Calculation	5
1. Physical Description of the Plant	5
2. Site and Meteorology	8
3. Discussion of Phenomenology	8
4. Dose Calculation with STARDOSE	14
5. Check Calculation with RADTRAD	17
Conclusion	23

Appendix A (Rev 1): STARDOSE "Input.dat" Files (2 files) – 15 Pages
Appendix B (Rev 0): STARDOSE "Libfile1.txt" File – 3 Pages
Appendix C (Rev 1): STARDOSE "Results.out" Files (2 files) to illustrate the 30-day CR, LPZ doses and Airborne Activities as a function of Time – 37 pages
Appendix D (Rev 1): STARDOSE "Results.out" File (1 file) to illustrate the EAB dose calculation – 6 pages
Appendix E (Rev 0): STARDOSE "Results.out" File (1 file) to illustrate the containment activity at 2.44 hours, when 98% of the airborne activity is removed – 6 pages
Appendix F (Rev 0): RADTRAD Input Files (10 files) – 70 pages
Appendix G (Rev 0): RADTRAD Nuclide Information Files (2 files) – 10 pages
Appendix H (Rev 0): RADTRAD Release File (1 file) – 1 page
Appendix I (Rev 0): RADTRAD Dose Conversion Factors File (1 file) – 13 pages
Appendix J (Rev 0): RADTRAD Excerpts from Result Files (10 files) – 14 pages
Appendix K (Rev 1): RADTRAD Offsite Doses Calculation Spreadsheet – 53 pages
Appendix L (Rev 0): Conservatism of MSIV leak rates – 3 pages

Attachment 1 (Rev 1): Input Summary – 5 pages
Attachment 2 (Rev 0): Loss of Spray Droplets in the Columbia Drywell – 13 pages total + 2 drawings
Attachment 3 (Rev 0): Benchmark for Current TID-14844 DBA-LOCA Dose - 17 pages total
Attachment 4 (Rev 1): Liquid Leakage Bypass Analysis - 24 pages total

Purpose

This report details an application of the Alternative Source Term (AST) to Energy Northwest's Columbia Generating Station (Columbia) using RADTRAD Methodology. Its purpose is to justify the deletion of the Main Steam Isolation Valves Leakage Control System (MSIV-LCS), and resolve both the secondary containment drawdown and control room inleakage USQs.

Methodology

The STARDOSE computer code (Reference 1) is used for the dose calculation, in parallel with RADTRAD (Reference 2) being used in a check calculation.
The analysis is conducted as follows:

1. Physical description of the plant,
2. Site meteorology description (control room and offsite X/Qs),
3. Description of phenomenology related to the AST application, including source term, spray removal in containment, and natural removal in the steam lines,
4. Dose calculation and results using the STARDOSE computer code, and
5. Check calculation using RADTRAD.

The plant model used for the dose calculation in shown on Figure 1 and widely discussed in Section 4.

Assumptions

Assumption 1 The nuclides listed in Table 1-1 of this document meet the requirements of Section 3.4 of Reference 4 (RG 1.183).

Justification The nuclides used for Columbia are the 60 identified as being potentially important contributors to TEDE in Reference 10 (MACCS User's Guide) (less the two cobalt isotopes which have a minor impact) plus four additional noble gas isotopes from Reference 6 (TID-14844), plus three other short-lived noble gas isotopes, plus Ba137m for a total of 66.

Assumption 2 Columbia's containment leakage is reduced by 50% after 24 hours into the event.

Justification Per Reference 14, the drywell pressure decreases after reaching its second peak 8 to 10 hours into the event, the highest drywell pressure of 52.1 psia (37.4 psig) being obtained at the first peak. At about 14 hours, the pressure has already decreased to 24.2 psia (9.5 psig), which is already much less than half the gauge pressure at the highest peak. Consequently, one can be assured that the gauge pressure at 24 hours will be also much less than half the gauge pressure at the peak, which justifies a 50% reduction in the containment leakage.

References

1. STARDOSE Executable file dated 3/21/97, PSAT CI09.03, Rev. 0, "Stardose Model Report", January 31, 1997

2. RADTRAD Executable Version 3.02a, January 5, 2000

3. Deleted

4. "Alternative Radiological Source Terms for Evaluating Design Basis Accidents at Nuclear Power Reactors", US NRC Regulatory Guide 1.183, Revision 0, July 2000

5. PSAT 206CT.QA.01.05, "Columbia Water Pool pH", Revision 2, 9/12/01

6. J.J. DiNunno et al., "Calculation of Distance Factors for Power and Test Reactor Sites", USAEC TID-14844, US Atomic Energy Commission (now US NRC), 1962

7. US NRC "Containment Spray as a Fission Product Cleanup System", Standard Review Plan, Section 6.5.2, Rev. 2, NUREG-0800, December 1988

8. NUREG/CR-6604, "RADTRAD: A Simplified Model for Radionuclide Transport and Removal and Dose Estimation", US NRC, December 1997

9. "Assessment of Radiological Consequences for the Perry Pilot Plant Application using the Revised (NUREG-1465) Source Term", AEB-98-03, 12/9/98

10. NUREG/CR-4691, "MELCOR Accident Consequence Code System (MACCS)", February 1990

11. Federal Guide 11, "Limiting Values of Radionuclide Intake and Air Concentration and Dose Conversion Factors for Inhalation, Submersion, and Ingestion", 1988

12. NUREG/CR-5106, "Manual for TACT5 – Version SAIC 9/23/1987

13. PSAT 206CT.QA.01.11, "Columbia Control Room Shine Dose Calculation", Revision 1, 10/19/01

14. Columbia FSAR Figure 6.2-10

Calculation

1. Physical Description of the Plant

Columbia is a BWR/5 with a Mark II containment. Per Attachment 1, the current rated power is 3486 MW(t). However, the power level was increased by 2% to 3556 MW(t) to account for power measurement uncertainties in accordance with SRP 15.6.5.

1.1 Core Inventory

Per Attachment 1, the assumed core inventory of radiologically significant nuclides based on the increased power level is given on Table 1-1, on a per MW(t) basis.

Table 1-1 – Radionuclide Data For Columbia (Power Level of 3556 MW(t))

Nuclide	Ci/MWt	Nuclide	Ci/MWt	Nuclide	Ci/MWt
Kr83m	3.57E+03	I134Part	6.03E+04	Y93	3.56E+04
Kr85m	7.35E+03	I135Part	5.03E+04	Zr95	4.27E+04
Kr85	4.11E+02	Rb86	4.47E+01	Zr97	4.33E+04
Kr87	1.34E+04	Cs134	6.27E+03	Nb95	4.27E+04
Kr88	1.90E+04	Cs136	1.39E+03	La140	4.71E+04
Kr89	2.20E+04	Cs137	5.05E+03	La141	4.36E+04
Xe131m	2.79E+02	Sb127	3.31E+03	La142	4.17E+04
Xe133m	1.66E+03	Sb129	9.48E+03	Pr143	3.78E+04
Xe133	5.43E+04	Te127m	4.66E+02	Nd147	1.71E+04
Xe135m	1.11E+04	Te127	3.31E+03	Am241	7.67E+00
Xe135	1.31E+04	Te129m	1.39E+03	Cm242	1.74E+03
Xe137	4.65E+04	Te129	8.90E+03	Cm244	1.41E+02
Xe138	3.59E+04	Te131m	4.20E+03	Ce141	4.43E+04
I131Org	2.79E+04	Te132	3.99E+04	Ce143	4.01E+04
I132Org	3.94E+04	Ba137m	3.01E+03	Ce144	3.25E+04
I133Org	5.44E+04	Ba139	4.72E+04	Np239	7.01E+05
I134Org	6.03E+04	Ba140	4.58E+04	Pu238	9.56E+01
I135Org	5.03E+04	Mo99	4.90E+04	Pu239	1.89E+01
I131Elem	2.79E+04	Tc99m	4.34E+04	Pu240	3.11E+01
I132Elem	3.94E+04	Ru103	4.70E+04	Pu241	8.85E+03
I133Elem	5.44E+04	Ru105	3.46E+04	Sr89	2.02E+04
I134Elem	6.03E+04	Ru106	2.04E+04	Sr90	3.34E+03
I135Elem	5.03E+04	Rh105	3.27E+04	Sr91	2.59E+04
I131Part	2.79E+04	Y90	2.04E+03	Sr92	3.01E+04
I132Part	3.94E+04	Y91	2.73E+04		
I133Part	5.44E+04	Y92	2.90E+04		

1.2 Containment

Columbia's Mark II containment consists of two compartments with the following free volumes:

Drywell:		200,540 ft^3 (Attachment 1)
Wetwell:	Gas	144,184 ft^3 (Attachment 1)
	Water	137,262 ft^3 (Attachment 1)

The two volumes are connected by a vent system, which allows any steam accidentally released from the reactor vessel (located in the drywell) to flow into the suppression pool. Non-condensables would then collect in the wetwell gas space above the pool. When the drywell pressure is reduced by condensation in the drywell (principally due to spray operation), a portion of these non-condensables will return to the drywell through vacuum breakers. Note that suppression pool scrubbing of activity carried to the suppression pool by the process described just above is not credited at all in this analysis.

At the end of the release phase (i.e. at 2.033 hours), it is assumed that both volumes are well mixed.

The containment is permitted by Technical Specification to leak at a maximum rate of 0.5 %/day (Attachment 1). Because of post-accident containment depressurization this leak rate will decrease with time. NRC regulatory guidance (Reference 4) permits a factor of two reduction in this leak rate after 24 hours (see Assumption 2). This leakage is collected within the reactor building or secondary containment after drawdown is complete (10 minutes per Attachment 1). Prior to drawdown, the containment leakage is assumed to leak directly to the environment.

1.3 Reactor Building

The reactor building has a free volume of 3.48E6 ft^3 (Attachment 1). However, only 40% of this volume is credited for mixing, per Attachment 1. Leakage into this structure is collected, processed, and directed up the plant vent by the Standby Gas Treatment System (SGTS). The SGTS has a flow rate of 5000 cfm (Attachment 1). During the pre-drawdown period the secondary containment is assumed to be completely bypassed. After this period, the filter efficiency for all forms of iodine and for particulates is 99% (Attachment 1); however, there continues to be a filter bypass of 50 cfm, which reduces the filter efficiency to an effective value of 98% (Attachment 1).

1.4 Reactor Building Bypass Leakages

MSIV leakage is the most important secondary containment bypass leakage. Per Attachment 1, it is limited to 11.5 scfh per valve, or 46 scfh for four steam lines at a test pressure of 39.7 psia (25 psig). Accident conditions assume a maximum DW pressure of 52.1 psia (37.4 psig) with a temperature of 283 F (Attachment 1). As a result, 11.5 scfh corresponds to a mass flow of 11.5(52.1/39.7) = 15.1 scfh at accident pressure, that translates into a volumetric flow rate of (15.1)(14.7/52.1)(743R)/(530R) = 5.97 cfh or 0.0995 cfm.

If the main steam lines and the main condenser were to remain intact (and because operation of the MSIV Leakage Control System or LCS is not credited), this MSIV leakage would eventually collect in the main condenser. However, for Columbia it is assumed that only the main steam lines between the MSIVs and from the outboard MSIVs to the turbine stop valves remain intact. Because of the undefined condition at the turbine stop valves (e.g., the possibility of the valves being stuck open and piping failed beyond), there may be the opportunity for significant free convection of outside air into that portion of the line. Accordingly, that portion of the piping is ignored; and only that portion between the MSIVs (average diameter of about 2 ft with a volume of 64.8 ft^3 – Attachment 1) is available for retention.

There is also bypass directly from the containment to the environment, in addition to the MSIV leakage described above. The current limit for this bypass is 0.04 %/day (Attachment 1).

1.5 Suppression Pool

The pH of the suppression pool determines the fraction of dissolved iodine which may appear in elemental form as opposed to the more soluble iodide or iodate forms. Columbia's suppression pool pH is controlled to prevent acids produced from dissolved carbon dioxide and nitrogen in the suppression pool and from post-accident decomposition of chloride-bearing electrical insulation in the containment from lowering the suppression pool pH to a point where iodine conversion to the elemental form is essentially complete. Per Reference 5, pH will remain above 7 and consequently, no iodine re-evolution is considered.

1.6 ESF Leakage

Engineered Safety Feature (ESF) leakage is that leakage associated with leaking fluid systems within the reactor building but outside primary containment (e.g. containment spray). For Columbia, it is assumed to be limited to one gpm (Attachment 1). However, in accordance with Reference 4 (Appendix A, 5.2), the maximum ESF system liquid leak rate has been increased by a factor of two for conservatism, resulting in an "as analyzed" value of two gpm. Therefore, a two gpm (0.268 cfm) ESF leakage is assumed from the suppression pool into the reactor building, beginning when DW spray operation is assumed to start (at t = 15 minutes – see spray-related section). Per Reference 4, 10% of the iodine in the leaked suppression pool water is released to the secondary containment atmosphere as mostly elemental iodine with three percent organic iodine.

1.7 Control Room

The control room has a free volume of 2.14E5 ft^3 (Attachment 1), and is assumed to leak (i.e., exchange with the environment) at a rate of 250 cfm in addition to the filtered make-up rate of 1800 cfm (Attachment 1 – 2 trains in operation). After 30 minutes, the control room operator is assumed to secure one train, consequently reducing the unfiltered leakage to 125 cfm and the filtered makeup to 900 cfm. The control room filter for the make-up flow is 95% efficient for organic and elemental iodine forms and 99% efficient for particulates (Attachment 1).

2. Site and Meteorology

The Columbia site is located in Washington State near the Tri-Cities. The distance to the Exclusion Area Boundary (EAB) is 1950 meters. The low population zone (LPZ) distance is 4827 meters. Per Attachment 1, the X/Q sets for the EAB and LPZ are as follows:

EAB:	0 to 2 hours:	1.8e-4 sec/m^3
LPZ:	0 to 8 hours:	5.04E-5 sec/m^3
	8 to 24 hours:	3.76E-5 sec/m^3
	1 to 4 days:	1.99E-5 sec/m^3
	4 to 30 days:	7.97E-6 sec/m^3

For the control room X/Qs, the situation is more complex. Two sets of X/Qs are to be considered for either the control room filtered makeup ("filtered X/Q") or the unfiltered control room inleakage ("unfiltered X/Q"). X/Qs referred to as Turbine Building X/Qs are used for the DW leakage through the steam lines (either failed or intact), SCN bypass X/Qs are used for other-than-MSIV reactor building bypass leakages, and finally Roofline Release X/Qs are for the release through the SGT plant vent.

Table 2-1
(Attachment 1)
ARCON 96 Control Room X/Q Values (in sec/m^3) by Release Point

	Filtered			Unfiltered		
	Turbine Building	SCN Bypass	SGT Roofline	Turbine Building	SCN Bypass	SGT Roofline
0 – 0.5 hrs	7.03E-04	4.13E-04	2.41E-04	3.17E-03	6.80E-04	5.79E-04
0.5 – 2 hrs	6.13E-04	4.03E-04	2.29E-04	3.17E-03	6.80E-04	5.79E-04
2 - 8 hrs	4.71E-04	1.70E-04	9.47E-05	2.40E-03	4.92E-04	2.86E-04
8 - 24 hrs	2.42E-04	8.21E-05	5.17E-05	1.19E-03	2.53E-04	1.79E-04
1 - 4 days	1.66E-04	5.77E-05	3.97E-05	7.91E-04	1.45E-04	1.25E-04
4 - 30 days	1.25E-04	4.87E-05	3.05E-05	5.87E-04	1.19E-04	9.15E-05

3. Discussion of Phenomenology

3.1 Source Term

The source term is the containment source term; i.e., the quantity, type, and timing of the release of radioactivity from a damaged reactor core to the containment as required by 10CFR100 and now 10CFR50.67. The Alternate Source Term originally described in NUREG-1465 is also detailed in RG 1.183 (Reference 4).

The first two release periods of Reference 4 are used for DBA-LOCAs, with a 120-second delay allowed for BWRs. Therefore, the gap release phase lasts from t = 120 seconds to t = 1920

seconds, and the early in-vessel release phase (sometimes referred to as the fuel release phase) lasts from t = 1920 seconds to t = 7320 seconds.

Per Reference 4, the source term is as follows:

Table 3-1 – Columbia Source Term

Release Time Frame	Fraction of Core Inventory Released	
0 – 0.033 hours	No Release	
0.033 - 0.533 hours	Gases	Xe, Kr – 0.1/hr (0.05 total) Elemental I – 4.9E-3/hr (2.4E-3 total) Organic I – 1.5E-4/hr (7.5E-5 total)
	Aerosols	I, Br – 0.095/hr (0.0475 total) Cs, Rb – 0.1/hr (0.05 total)
0.533 –2.033 hours	Gases	Xe, Kr – 0.63/hr (0.95 total) Elemental I – 8.1E-3/hr (1.2E-2 total) Organic I – 2.5E-4/hr (3.8E-4 total)
	Aerosols	I, Br – 0.158/hr (0.2375 total) Cs, Rb – 0.133/hr (0.2 total) Te Group – 0.033/hr (0.05 total) Ba, Sr – 0.013/hr (0.02 total) Noble Metals – 1.7E-3/hr (2.5E-3 total) La Group – 1.3E-4/hr (2E-4 total) Ce Group – 3.3E-4/hr (5E-4 total)

3.2 Containment Spray

Per Reference 4, reduction in containment airborne activity by containment spray systems may be credited. The following discussion addresses this specific topic.

3.2.1 Timing for Spray Operation

Spray initiation is assumed to be called for 15 minutes into the event (Attachment 1), due to a high radiation level in containment. Note that this timing is actually conservative since the radiation level in the drywell will exceed the threshold of 1.4E4 rads/hour (Attachment 1) only a few minutes after the start of the gap release. Regarding spray shut off, it is expected that after 24 hours, essentially all the activity that can be removed by the sprays will have been removed. Therefore, the sprays are assumed to be turned off at the end of the first day into the accident.

3.2.2 Aerosol Removal Rates

In SRP Section 6.5.2 (Reference 7), the expression for spray removal rate of particulate, λ_p, is given as:

$$\lambda_p = \frac{3}{2}\frac{hFE}{VD} \qquad \text{(Equation 1)}$$

where: h = spray fall height
F = spray flow rate
E = collection efficiency
V = volume being sprayed
D = spray droplet diameter

The SRP section suggests that E/D be set equal to 10 per meter initially (i.e., a one percent collection efficiency for a one mm droplet) and then reduced to 1.0 per meter when 98% of the mass has been removed.

Table 3-2 – Aerosol DW Spray Removal Rates

3.3 Natural Removal in Steam Lines

It is assumed that the steam lines remain intact up to the turbine stop valves. However, as noted in the previous section, only the piping between the two MSIVs in three of the four main steam lines is actually credited for removal of activity.

The treatment of natural removal in the steam lines begins with the assumption that one steam line has failed catastrophically in the drywell very close to the inboard MSIV. This failure ultimately results in core damage and eliminates that portion of the line between the vessel and the inboard MSIV as a flowpath in which natural deposition can occur. Moreover, for this steam line it is assumed that the outboard MSIV fails to close, thus creating an unrestricted flowpath from the inboard MSIV to the point where the steam lines are assumed to release activity to the environment (i.e., at the turbine stop valves).

Even though natural deposition occurs in the intact steam lines between the vessel and the inboard MSIVs, it is not credited.

Proprietary information deleted.

Proprietary information deleted.

4. Dose Calculation with STARDOSE

The dose calculation model consists of six control volumes representing the damaged core and reactor cooling system (CORE), the drywell portion of the primary containment (DW), the wetwell portion of the primary containment (WW), the suppression pool (SP), the reactor building or secondary containment (RB), and finally, the control room (CR). These control volumes are arranged as shown on Figure 1 with the various junctions that connect them. These junctions are associated with volumetric flows which determine the rate at which radioactivity is exchanged between the control volumes. In addition, removal processes such as sedimentation in pipes and filtration are modeled within and between the control volumes, as appropriate.

4.1 Core-Related Junctions

The core junctions effect the release of radioactivity to the drywell (1) and to the suppression pool (2) in parallel. That's why there are actually two similar SP volumes shown on Figure 1, one being used only for ESF leakage iodine release considerations (SP_{esf}). The drywell and suppression pool releases are an example of conservative "double-counting" in that the same radioactivity is assumed to be in both places at the same time. In fact, the release of radioactivity to the suppression pool is assumed in the analysis to be complete within the first two hours of the accident, even though it actually takes several hours for the sprays and other mechanisms to remove the radioactivity from the containment atmosphere and get it into the water of the suppression pool.

Note that there is twice as much iodine activity transferred to the SP than what is transferred to the DW. Indeed elemental and organic iodine species only account for 5% of the core iodine inventory. Therefore, in order to get 10% of the core inventory of iodine into the SP control volume in the correct chemical form, the release of the 5% elemental and organic iodine had to be doubled. The particulate iodine is then filtered out with an "imaginary" filter in the SP-to-RB junction (3). In addition, an imaginary 50% efficient filter for noble gas is used between the suppression pool and the reactor building so as to limit the noble gas release to that corresponding to 30% of the core inventory of iodine rather than 60%.

4.2 Containment Transport and Environmental Release-Related Junctions

These junctions are:

- Drywell-to-wetwell mixing flow rate (4) of one wetwell volume per minute (to ensure well-mixed conditions), effective after the end of the release phase (i.e., after 2.033 hours),
- Containment leakage of 0.50% of the drywell and wetwell volumes per day (junctions 5 & 6) collected into the RB after drawdown (10 minutes) but directly released to the environment before that,
- SGTS exhaust flow, via plant vent (7) at a rate of 5000 cfm, (the filter efficiency after drawdown is assumed to be 99% with 50 cfm of filter bypass),
- Secondary containment bypass pathways such as leakage through one failed steam line (8) at a rate of 5.97 cfh, leakage through three intact steam lines (9) where deposition phenomena are modeled (volumetric flow rate of 8.44 cfh per line), and other RB bypass (10), corresponding to 0.04% of the containment volume per day.

4.3 Control Room-Related Junctions

Control room junctions exist in the model to take activity out of the environment (after it has been diluted by the appropriate X/Q) and bring it into the control room. 1800 cfm of the CR inflow (two trains operating) is filtered by the CREF (junction 11, filter efficiency of 95% for the gaseous iodine species, 99% for the particulates) while 250 cfm of inflow bypasses the filters (12). The control room operator is assumed to secure one train after 30 minutes. Therefore, the filtered flow goes down to 900 cfm, with an unfiltered inleakage of 125 cfm. Different X/Qs are applied to these two inflows as explained in Section 2. The combined flows are released back into the environment via junction 13, at a total flow rate of 2050 cfm prior to 30 minutes, and 1025 cfm thereafter.

4.4 Calculation

The STARDOSE computer code (Reference 1) is used for the control room and offsite dose calculations. Two different input files are needed to run this code:

- The INPUT.DAT file is the model file, that represents the control volumes and junctions as presented on Figure 1.

- The LIBFILE1.TXT file is a library file, which contains all the radionuclide input data: isotope names (column 1), parent and daughter isotopes (column 2 and 3), core inventory (column 5), isotope decay constants (column 6), and dose conversion factors. The radionuclides considered are those from Reference 10 (except the cobalt isotopes which are not significant) plus additional Kr and Xe isotopes, in particular those included in Reference 6 (see Assumption 1). Core inventories per MWt are from Table 1-1. Dose conversion factors are based on Reference 11 for CEDE doses inhaled (column 12) and Reference 12 for external doses (WB, column 8) except where Reference 11 provides updated information. Radioactive decay rates are from Reference 12.

For this dose calculation, two STARDOSE runs with two different INPUT.DAT files but one common LIBFILE1.TXT file were necessary, due to the difference of X/Qs between the CR intake and the CR unfiltered inleakage. These two main input files are shown in Appendix A, whereas the LIBFILE1.TXT file is reproduced in Appendix B. The CR dose for each case was obtained adding up the CR TEDE of the "intake" run (CR unfiltered inleakage turned off) to the CR TEDE dose of the "inleakage" run (CR intake volumetric flow turned off). Note that TEDE equals CEDE plus Whole Body dose. STARDOSE outputs provide CEDE and Whole Body doses, not TEDE.
The offsite doses are calculated by STARDOSE along with the CR doses, for each run. As the offsite X/Qs were not modified when running two CR combined cases, the offsite dose results are identical.

To summarize, the major assumptions implemented in the INPUT.DAT file are as follows:
- No credit for MSIV-LCS,
- Credit for spray removal in the drywell (SRP model), recognizing spray droplet impingement in a somewhat congested drywell,
- No credit for natural deposition in containment,

- 0.50%/day of containment leakage,
- 11.5 scfh of MSIV leakage, credit for aerosol and iodine deposition in three intact steam lines, between the inboard and outboard MSIVs, one line being assumed to leak directly into the environment,
- 0.04%/day of containment volume bypassing the reactor building,
- 1 gpm of ESF leakage analyzed as 2 gpm, with 10% iodine release fraction,
- Drawdown time of 10 minutes,
- 5000 cfm through the SGTS, with 50 cfm bypassing the filters,
- Credit for 40% mixing in the secondary containment,
- Control room intake filters 95% efficient for iodine, 99% for particulates, 1800 cfm of makeup, 250 cfm of unfiltered inleakage; flow rates reduced by 50% after 30 minutes.

4.5 Results

Control room and LPZ dose results are shown in Appendix C, while calculation of the Max 2-hour EAB dose is detailed in Appendix D.

Table 4-1 below presents the offsite and control room TEDE doses for Columbia.

Table 4-1 – CR and Offsite Dose Results

30-day CR TEDE (rem)	Max 2-h EAB TEDE (rem)	30-d LPZ TEDE (rem)
4.39	2.32	2.97

5. Check Calculation with RADTRAD

The RADTRAD computer code was used to perform this check calculation. Note that due to known code imperfections or due to the fact that RADTRAD is less flexible than STARDOSE, it was necessary to adapt the plant model to that specific code to be able to perform runs equivalent to those performed with STARDOSE.

5.1 Multiple-Pathways-to-Environment Issue

As mentioned on the 'www.radtrad.com' web site managed by ITSC (FAQs Section), double flowpaths leaving a single compartment and entering the environment give high control room doses in the current 3.02 RADTRAD Version (Reference 2).

This problem was actually witnessed in our case as several leakage pathways from the drywell to the environment exist in the Columbia plant model: 1) MSIV leakage through the failed line, 2) MSIV leakage through the intact lines, 3) Secondary containment bypass, including all containment leakage prior to drawdown.

To bypass this difficulty,

Proprietary information deleted.

5.2 ESF Release

As explained earlier, ESF leakage is treated in STARDOSE by putting twice as much iodine activity (but iodine only) in the suppression pool as in the drywell, and filter out all the particulate form so that the iodine release into the reactor building amounts to 10% of the initial iodine inventory.

Unfortunately, it is not possible to do so in RATRAD. Indeed, the only way to model a release from the core into a control volume is to direct a fraction of an entire core inventory file to that specific volume. Moreover, the code accepts only one inventory file at a time. One option would have been to have doubled the initial core inventory and to have directed 50% of it to the drywell and 50% of it to the suppression pool. However, this option would have put noble gases in the suppression pool control volume in addition to the iodine and other particle isotopes. While the latter isotopes can be filtered out when modeling the leakage to the reactor building, noble gases cannot be removed. Therefore, this option was abandoned, as it would have tripled the noble gas inventory in the problem. (Note that some noble gases are actually produced, resulting from decay of iodine isotopes in the suppression pool, but there should not be any noble gases in the suppression pool in the first place.)

Consequently,

Proprietary information deleted.

5.3 Deposition in the Intact Steam Lines

The easiest way to model aerosol and iodine deposition in the three intact steam lines would have been to use the Brockmann and Bixler models "as is", that is to say using the "pipe" feature built in RADTRAD. However, we chose to model steam line deposition as filters which efficiencies were calculated as previously shown in Section 3.3.

5.4 Edit Time Issue

In order to retrieve accurate dose results, it appeared essential to request a high number of time edits when preparing the RADTRAD input files, especially in the first few hours into the event.

Proprietary information deleted.

5.5 Dose Conversion Factors

60 isotopes are used in RADTRAD instead of 66 in STARDOSE (see Assumption 1). For example, the following eight isotopes are included in the STARDOSE Libfile1.txt file but not in the equivalent RADTRAD nuclide information file: Kr83m, Kr89, Xe131m, Xe133m, Xe135m, Xe137, Xe138, and Ba137m. Two insignificant Cobalt isotopes are included in the RADTRAD input but not in STARDOSE: Co58 and Co60. However, as the core inventory for Columbia did not show these two cobalt isotopes, their inventories were set to zero in the RADTRAD nuclide information file (COLUMBIA.NIF). As for the 58 others, their inventories were set according to Table 1-1 of Section 1.

The Dose Conversion Factors file used in the RADTRAD calculation is base on the Federal Guide Reports 11 and 12 (FGR11&12.INP). Further discussion on this matter is provided in the Results section.

5.6 Calculation

To complete the check calculation, RADTRAD was run ten times as follows:

Table 5-2-1 – RADTRAD Cases

Run #	Dose Contributors	Control Room Inflow
1f	Leakage through Failed Steam Line	Filtered
1u	Leakage through Failed Steam Line	Unfiltered
2f	Leakage through three Intact Steam Lines	Filtered
2u	Leakage through three Intact Steam Lines	Unfiltered
3f	Secondary Containment Bypass	Filtered
3u	Secondary Containment Bypass	Unfiltered
4f	Containment Leakage through SGTS	Filtered
4u	Containment Leakage through SGTS	Unfiltered
5f	ESF Iodine Release through SGTS	Filtered
5u	ESF Iodine Release through SGTS	Unfiltered

Control Room Dose Calculation:

To obtain the final control room TEDE, one needs to add up the control room TEDEs of all ten single runs.

Offsite Dose Calculation:

Since differences between a filtered run ("f") and an unfiltered run ("u") are only related to the control room model, offsite dose results are identical. Consequently, to obtain the offsite dose results one would need to add doses of only five runs corresponding to five different pathways (e.g. "1f" + "2f" + "3f" + "4f" + "5f"). Unfortunately, these runs have been performed with preliminary offsite X/Qs that were revised later on. Thus, offsite dose results of these single runs cannot be used directly. To retrieve the correct cumulative offsite doses, it is necessary to combine the offsite dose results of each single run at each time step, calculate combined offsite dose increments and then apply a correction to these increments prior to reconstructing cumulative offsite doses. Details of this calculation are shown in Appendix K, as well as the calculation of the Max 2-hour EAB dose.

Matrix of Runs and Input Files:

Table 5-2-2 – RADTRAD Cases

Run #	Nuclide Inventory File	Initial Location of Inventory	Release Pathways to the Environment								CR X/Q Set	CR Inflow	CR Outflow
			Failed SL		Intact SLs		SCN Bypass		SGTS Release				
			From	To	From	To	From	To	From	To			
1f	columbia.nif	DW	DW	Enviro	DW	Dummy	DW&WW	Dummy	RB	Dummy	TB_f	F	F+U
1u	columbia.nif	DW	DW	Enviro	DW	Dummy	DW&WW	Dummy	RB	Dummy	TB_u	U	F+U
2f	columbia.nif	DW	DW	Dummy	DW	Enviro	DW&WW	Dummy	RB	Dummy	TB_f	F	F+U
2u	columbia.nif	DW	DW	Dummy	DW	Enviro	DW&WW	Dummy	RB	Dummy	TB_u	U	F+U
3f	columbia.nif	DW	DW	Dummy	DW	Dummy	DW&WW	Enviro	RB	Dummy	SCN_f	F	F+U
3u	columbia.nif	DW	DW	Dummy	DW	Dummy	DW&WW	Enviro	RB	Dummy	SCN_u	U	F+U
4f	columbia.nif	DW	DW	Dummy	DW	Dummy	DW&WW	Dummy	RB	Enviro	SGT_f	F	F+U
4u	columbia.nif	DW	DW	Dummy	DW	Dummy	DW&WW	Dummy	RB	Enviro	SGT_u	U	F+U
5f	columbiaesf.nif	SP	DW	Dummy	DW	Dummy	DW&WW	Dummy	RB	Enviro	SGT_f	F	F+U
5u	columbiaesf.nif	SP	DW	Dummy	DW	Dummy	DW&WW	Dummy	RB	Enviro	SGT_u	U	F+U

Input and Output files related to these RADTRAD runs are provided at the end of this report as follows:

Appendix F Main Input Files ("1f" through "5u")
Appendix G Nuclide Information Files (COLUMBIA.NIF & COLUMBIAESF.NIF)
Appendix H File detailing Release Phases for Columbia (COLUMBIA.RTF)
Appendix I Dose Conversion Factor File (FGR11&12.INP)
Appendix J Excerpts from Output Files
Appendix K Offsite Dose Calculation Spreadsheet

5.7 Results

Table 5-3 – RADTRAD Results

Run #	Dose Contributor	Control Room Inleakage	30-d CR TEDE (rem)	Max 2-h EAB TEDE (rem)	30-d LPZ TEDE (rem)
1f	Failed SL	Filtered	0.08	Not Applicable See Appendix K	Not Applicable See Appendix K
1u	Failed SL	Unfiltered	2.13		
2f	Intact SLs	Filtered	0.16		
2u	Intact SLs	Unfiltered	1.55		
3f	SCN Bypass	Filtered	0.03		
3u	SCN Bypass	Unfiltered	0.35		
4f	Cont. (SGTS)	Filtered	0.05		
4u	Cont. (SGTS)	Unfiltered	0.05		
5f	ESF (SGTS)	Filtered	0.03		
5u	ESF (SGTS)	Unfiltered	0.15		
Total	All Pathways	Both	4.58	2.50	2.77

The RADTRAD results for the control room and the EAB are greater than the STARDOSE results, but this can be explained by a difference in

Proprietary information deleted.

Conclusion

The dose analysis contained in this report demonstrates that the Columbia Generating Station meets the radiological criteria described in 10CFR Part 50.67 for the EAB, LPZ and for the control room. The EAB and LPZ doses represent only a small fraction of their respective dose limits. As for the control room, the conditions imposed by the DBA event would not subject the most exposed operator to a dose in excess of the 5 Rem TEDE limit over a period of 30 days. Although this calculation does not address gamma "shine" doses from sources outside the control room, Reference 13 shows that such doses are negligible.

Figure 1 - Columbia Plant Model

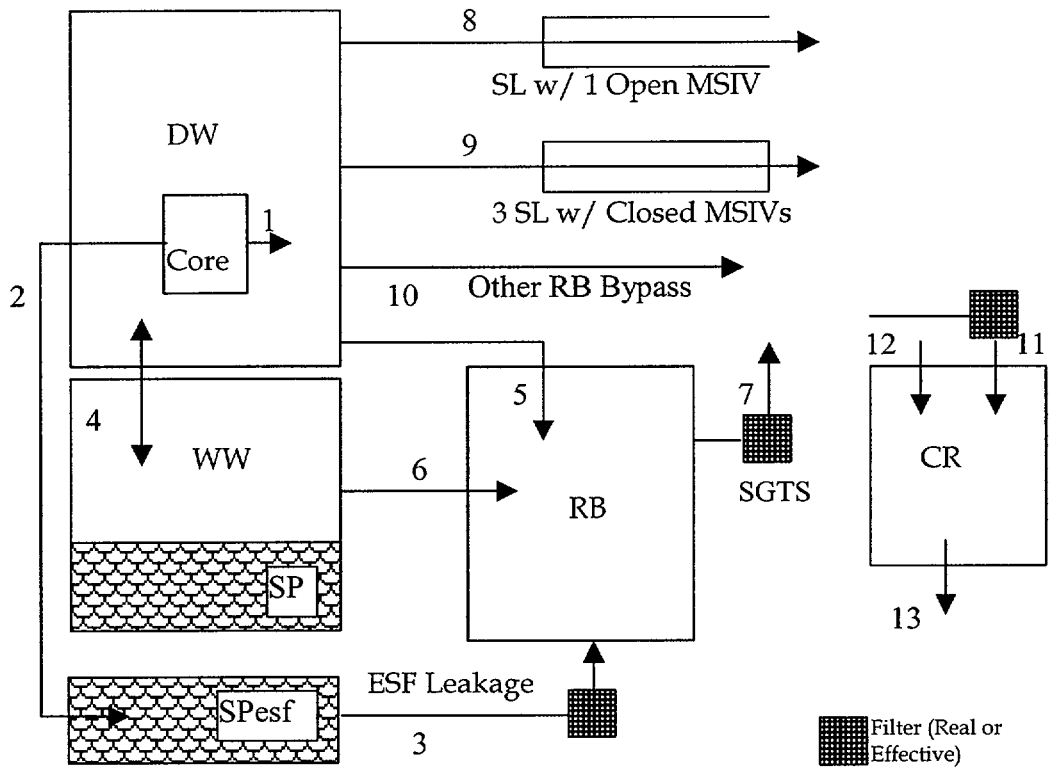

SP Suppression Pool
SPesf Suppression Pool (for Parallel Treatment of ESF Leakage Only)

APPENDIX A

STARDOSE "INPUT.DAT" FILES

Control Room Filtered Inleakage Case:

```
edit_time
0.0 0.1 0.2 0.3 0.4 0.5 0.6 0.7 0.8 0.9
1.0 1.1 1.2 1.3 1.4 1.5 1.6 1.7 1.8 1.9
2.0 2.1 2.2 2.3 2.4 2.44 2.5 2.6 2.7 2.8 2.9
3.0 3.1 3.2 3.3 3.4 3.5 3.6 3.7 3.8 3.9
4.0 6.0 8.0 24.0 96.0 720.0
end_edit_time

participating_isotopes
Kr83m   Kr85m   Kr85    Kr87    Kr88    Kr89
Xe131m  Xe133m  Xe133   Xe135m  Xe135   Xe137   Xe138
I131Org I131Elem        I131Part
I132Org I132Elem        I132Part
I133Org I133Elem        I133Part
I134Org I134Elem        I134Part
I135Org I135Elem        I135Part
Rb86    Cs134   Cs136   Cs137
Sb127   Sb129   Te127m  Te127   Te129m  Te129   Te131m  Te132
Ba137m  Ba139   Ba140
Mo99    Tc99m   Ru103   Ru105   Ru106   Rh105
Y90     Y91     Y92     Y93     Zr95    Zr97    Nb95
La140   La141   La142   Pr143   Nd147   Am241   Cm242   Cm244
Ce141   Ce143   Ce144   Np239   Pu238   Pu239   Pu240   Pu241
Sr89    Sr90    Sr91    Sr92
end_participating_isotopes

core
thermal_power               3556
elemental_iodine_frac               0.0485
organic_iodine_frac         0.0015
particulate_iodine_frac             0.95
release_frac
to_control_volume DW
Time N_Gas I_Grp CsGrp TeGrp BaGrp NMtls CeGrp LaGrp SrGrp
0.033  0     0     0     0     0     0     0     0     0
0.533  0.1   0.1   0.1   0     0     0     0     0     0
2.033  0.633 0.167 0.133 0.033 0.0133 0.00167 0.00033 0.00013 0.0133
720    0     0     0     0     0     0     0     0     0
end_to_control_volume
to_control_volume SP
Time N_Gas I_Grp CsGrp TeGrp BaGrp NMtls CeGrp LaGrp SrGrp
0.033  0     0     0     0     0     0     0     0     0
0.533  0     0.2   0     0     0     0     0     0     0
2.033  0     0.334 0     0     0     0     0     0     0
720    0     0     0     0     0     0     0     0     0
end_to_control_volume
end_release_frac
end_core

control_volume
obj_type                            OBJ_CV
name                                DW
air_volume                          2.0054e+005
water_volume                0
```

```
surface_area                1
has_recirc_filter                   false
removal_rate_to_surface
Time   NobleGas     ElemIodine    OrgIodine     PartIodine    Solubles      Insolubles



end_removal_rate_to_surface
frac_4_daughter_resusp_from_surface
Time   NobleGas     ElemIodine    OrgIodine     PartIodine    Solubles      Insolubles
720    1      0      0      0      0      0
end_frac_4_daughter_resusp_from_surface
end_control_volume

control_volume
obj_type                            OBJ_CV
name                                WW
air_volume                          1.442e+005
water_volume                1.373e+005
surface_area                0
has_recirc_filter                   false
removal_rate_to_waterpool
Time   NobleGas     ElemIodine    OrgIodine     PartIodine    Solubles      Insolubles
720    0      0      0      0      0      0
end_removal_rate_to_waterpool
frac_4_daughter_resusp_from_water
Time   NobleGas     ElemIodine    OrgIodine     PartIodine    Solubles      Insolubles
720    0      0      0      0      0      0
end_frac_4_daughter_resusp_from_water
decontamination_factor
Time   NobleGas     ElemIodine    OrgIodine     PartIodine    Solubles      Insolubles
720    1      1      1      1      1      1
end_decontamination_factor
end_control_volume

control_volume
obj_type                            OBJ_CV
name                                RB
air_volume                          1.392e+006
water_volume                0
surface_area                0
has_recirc_filter                   false
end_control_volume

control_volume
obj_type                            OBJ_CV
name                                SP
air_volume                          1.373e+005
water_volume                0
surface_area                0
has_recirc_filter                   false
end_control_volume

control_volume
obj_type                            OBJ_CR
name                                Control_Room
air_volume                          2.14e+005
water_volume                0
surface_area                0
has_recirc_filter                   false
breathing_rate
Time   (hr)   Value  (cms)
```

```
720          0.00035
end_breathing_rate
occupancy_factor
Time   (hr)   Value  (frac)
24           1
96           0.6
720          0.4
end_occupancy_factor
end_control_volume

junction
junction_type              AIR_JUNCTION
downstream_location        AIR_SPACE
upstream                         CORE
downstream                       DW
has_filter                       false
flow_rate
Time   (hr)   Value  (cfm)
720    1
end_flow_rate
end_junction

junction
junction_type              AIR_JUNCTION
downstream_location        AIR_SPACE
upstream                         CORE
downstream                       SP
has_filter                       false
flow_rate
Time   (hr)   Value  (cfm)
720    1
end_flow_rate
end_junction

junction
junction_type              AIR_JUNCTION
downstream_location        WATER_POOL
upstream                         DW
downstream                       WW
has_filter                       false
flow_rate
Time   (hr)   Value  (cfm)
2.033        0
720          1.442e5
end_flow_rate
end_junction

junction
junction_type              AIR_JUNCTION
downstream_location        AIR_SPACE
upstream                         WW
downstream                       DW
has_filter                       false
flow_rate
Time   (hr)   Value  (cfm)
2.033        0
720          1.442e5
end_flow_rate
end_junction

junction
junction_type              AIR_JUNCTION
downstream_location        AIR_SPACE
```

```
upstream                        DW
downstream                      environment
has_filter                      false
flow_rate
Time   (hr)   Value  (cfm)


end_flow_rate
X_over_Q_4_ctrl_room
Time   (hr)   Value  (s/m*3)
0.5    7.03e-4
2      6.13e-4
8      4.71e-4
24     2.42e-4
96     1.66e-4
720    1.25e-4
end_X_over_Q_4_ctrl_room
X_over_Q_4_site_boundary
Time   (hr)   Value  (s/m*3)
720    1.8e-4
end_X_over_Q_4_site_boundary
X_over_Q_4_low_population_zone
Time   (hr)   Value  (s/m*3)
8      5.04e-5
24     3.76e-5
96     1.99e-5
720    7.97e-6
end_X_over_Q_4_low_population_zone
end_junction

junction
junction_type              AIR_JUNCTION
downstream_location        AIR_SPACE
upstream                        DW
downstream                      environment
has_filter                      true
flow_rate
Time   (hr)   Value  (cfm)


end_flow_rate
filter_efficiency
Time   NobleGas     ElemIodine    OrgIodine     PartIodine    Solubles      Insolubles

end_filter_efficiency
frac_4_daughter_resusp
Time   NobleGas     ElemIodine    OrgIodine     PartIodine    Solubles      Insolubles

end_frac_4_daughter_resusp
X_over_Q_4_ctrl_room
Time   (hr)   Value  (s/m*3)
0.5    7.03e-4
2      6.13e-4
8      4.71e-4
24     2.42e-4
96     1.66e-4
720    1.25e-4
end_X_over_Q_4_ctrl_room
X_over_Q_4_site_boundary
Time   (hr)   Value  (s/m*3)
720    1.8e-4
end_X_over_Q_4_site_boundary
X_over_Q_4_low_population_zone
```

```
Time   (hr)   Value  (s/m*3)
8      5.04e-5
24     3.76e-5
96     1.99e-5
720    7.97e-6
end_X_over_Q_4_low_population_zone
end_junction

junction
junction_type              AIR_JUNCTION
downstream_location        AIR_SPACE
upstream                         DW
downstream                       RB
has_filter                       false
flow_rate
Time   (hr)   Value  (cfm)
0.167         0
24            0.696
720           0.348
end_flow_rate
end_junction

junction
junction_type                    AIR_JUNCTION
downstream_location              AIR_SPACE
upstream                         WW
downstream                       RB
has_filter                       false
flow_rate
Time (hr) Value (cfm)
0.167  0
24            0.5
720           0.25
end_flow_rate
end_junction

junction
junction_type              AIR_JUNCTION
downstream_location        AIR_SPACE
upstream                         DW
downstream                       environment
has_filter                       false
flow_rate
Time   (hr)   Value  (cfm)



end_flow_rate
X_over_Q_4_ctrl_room
Time   (hr)   Value  (s/m*3)
0.5    4.13e-4
2      4.03e-4
8      1.70e-4
24     8.21e-5
96     5.77e-5
720    4.87e-5
end_X_over_Q_4_ctrl_room
X_over_Q_4_site_boundary
Time   (hr)   Value  (s/m*3)
720    1.8e-4
end_X_over_Q_4_site_boundary
X_over_Q_4_low_population_zone
Time   (hr)   Value  (s/m*3)
```

```
8       5.04e-5
24      3.76e-5
96      1.99e-5
720     7.97e-6
end_X_over_Q_4_low_population_zone
end_junction

junction
junction_type                   AIR_JUNCTION
downstream_location             AIR_SPACE
upstream                        WW
downstream                      environment
has_filter                      false
flow_rate
Time (hr) Value (cfm)
0.167         0.541
24            0.04
720           0.02
end_flow_rate
X_over_Q_4_ctrl_room
Time   (hr)   Value  (s/m*3)
0.5    4.13e-4
2      4.03e-4
8      1.70e-4
24     8.21e-5
96     5.77e-5
720    4.87e-5
end_X_over_Q_4_ctrl_room
X_over_Q_4_site_boundary
Time   (hr)   Value  (s/m*3)
720    1.8e-4
end_X_over_Q_4_site_boundary
X_over_Q_4_low_population_zone
Time   (hr)   Value  (s/m*3)
8      5.04e-5
24     3.76e-5
96     1.99e-5
720    7.97e-6
end_X_over_Q_4_low_population_zone
end_junction

junction
junction_type              AIR_JUNCTION
downstream_location        AIR_SPACE
upstream                         SP
downstream                       RB
has_filter                       true
flow_rate
Time   (hr)   Value  (cfm)
0.25   0
720    0.268
end_flow_rate
filter_efficiency
Time   NobleGas     ElemIodine    OrgIodine     PartIodine    Solubles      Insolubles
720    0.5    0      0      0.99999       0      0
end_filter_efficiency
end_junction

junction
junction_type              AIR_JUNCTION
downstream_location        AIR_SPACE
upstream                         RB
downstream                       environment
```

```
has_filter                          true
flow_rate
Time   (hr)   Value  (cfm)
720    5000
end_flow_rate
filter_efficiency
Time   NobleGas      ElemIodine    OrgIodine     PartIodine    Solubles      Insolubles
0.167  0      0      0      0      0      0
720    0      0.98   0.98   0.98   0.98   0.98
end_filter_efficiency
frac_4_daughter_resusp
Time   NobleGas      ElemIodine    OrgIodine     PartIodine    Solubles      Insolubles
720    1      1      0      0      0      0
end_frac_4_daughter_resusp
X_over_Q_4_ctrl_room
Time   (hr)   Value  (s/m*3)
0.5    2.41e-4
2      2.29e-4
8      9.47e-5
24     5.17e-5
96     3.97e-5
720    3.05e-5
end_X_over_Q_4_ctrl_room
X_over_Q_4_site_boundary
Time   (hr)   Value  (s/m*3)
720    1.8e-4
end_X_over_Q_4_site_boundary
X_over_Q_4_low_population_zone
Time   (hr)   Value  (s/m*3)
8      5.04e-5
24     3.76e-5
96     1.99e-5
720    7.97e-6
end_X_over_Q_4_low_population_zone
end_junction

junction
junction_type              AIR_JUNCTION
downstream_location        AIR_SPACE
upstream                          environment
downstream                        Control_Room
has_filter                        true
flow_rate
Time   (hr)   Value  (cfm)
0.5    1800
720    900
end_flow_rate
filter_efficiency
Time   NobleGas      ElemIodine    OrgIodine     PartIodine    Solubles      Insolubles
720    0      0.95   0.95   0.99   0.99   0.99
end_filter_efficiency
frac_4_daughter_resusp
Time   NobleGas      ElemIodine    OrgIodine     PartIodine    Solubles      Insolubles
720    1      1      0      0      0      0
end_frac_4_daughter_resusp
end_junction

junction
junction_type              AIR_JUNCTION
downstream_location        AIR_SPACE
upstream                          Control_Room
downstream                        environment
has_filter                        false
```

```
flow_rate
Time   (hr)   Value  (cfm)
0.5    2050
720    1025
end_flow_rate
X_over_Q_4_ctrl_room
Time   (hr)   Value  (s/m*3)
720    0
end_X_over_Q_4_ctrl_room
X_over_Q_4_site_boundary
Time   (hr)   Value  (s/m*3)
720    0
end_X_over_Q_4_site_boundary
X_over_Q_4_low_population_zone
Time   (hr)   Value  (s/m*3)
720    0
end_X_over_Q_4_low_population_zone
end_junction

environment
breathing_rate_sb
Time (hr)     Value (cms)
8      0.00035
720    0.0
end_breathing_rate_sb
breathing_rate_lpz
Time (hr)     Value (cms)
8      0.00035
24     0.00018
720    0.00023
end_breathing_rate_lpz
end_environment
```

Control Room Unfiltered Inleakage Case:

```
edit_time
0.0 0.1 0.2 0.3 0.4 0.5 0.6 0.7 0.8 0.9
1.0 1.1 1.2 1.3 1.4 1.5 1.6 1.7 1.8 1.9
2.0 2.1 2.2 2.3 2.4 2.44 2.5 2.6 2.7 2.8 2.9
3.0 3.1 3.2 3.3 3.4 3.5 3.6 3.7 3.8 3.9
4.0 6.0 8.0 24.0 96.0 720.0
end_edit_time

participating_isotopes
Kr83m   Kr85m   Kr85    Kr87    Kr88    Kr89
Xe131m  Xe133m  Xe133   Xe135m  Xe135   Xe137   Xe138
I131Org I131Elem        I131Part
I132Org I132Elem        I132Part
I133Org I133Elem        I133Part
I134Org I134Elem        I134Part
I135Org I135Elem        I135Part
Rb86    Cs134   Cs136   Cs137
Sb127   Sb129   Te127m  Te127   Te129m  Te129   Te131m  Te132
Ba137m  Ba139   Ba140
Mo99    Tc99m   Ru103   Ru105   Ru106   Rh105
Y90     Y91     Y92     Y93     Zr95    Zr97    Nb95
La140   La141   La142   Pr143   Nd147   Am241   Cm242   Cm244
Ce141   Ce143   Ce144   Np239   Pu238   Pu239   Pu240   Pu241
Sr89    Sr90    Sr91    Sr92
end_participating_isotopes

core
```

```
thermal_power                3556
elemental_iodine_frac                0.0485
organic_iodine_frac          0.0015
particulate_iodine_frac              0.95
release_frac
to_control_volume DW
Time N_Gas I_Grp CsGrp TeGrp BaGrp NMtls CeGrp LaGrp SrGrp
0.033  0      0      0      0      0      0      0      0      0
0.533  0.1    0.1    0.1    0      0      0      0      0      0
2.033  0.633  0.167  0.133  0.033  0.0133 0.00167 0.00033 0.00013 0.0133
720    0      0      0      0      0      0      0      0      0
end_to_control_volume
to_control_volume SP
Time N_Gas I_Grp CsGrp TeGrp BaGrp NMtls CeGrp LaGrp SrGrp
0.033  0      0      0      0      0      0      0      0      0
0.533  0      0.2    0      0      0      0      0      0      0
2.033  0      0.334  0      0      0      0      0      0      0
720    0      0      0      0      0      0      0      0      0
end_to_control_volume
end_release_frac
end_core

control_volume
obj_type                             OBJ_CV
name                                 DW
air_volume                           2.0054e+005
water_volume                 0
surface_area                 1
has_recirc_filter                    false
removal_rate_to_surface
Time   NobleGas     ElemIodine   OrgIodine    PartIodine   Solubles     Insolubles



end_removal_rate_to_surface
frac_4_daughter_resusp_from_surface
Time   NobleGas     ElemIodine   OrgIodine    PartIodine   Solubles     Insolubles
720    1      0      0      0      0      0
end_frac_4_daughter_resusp_from_surface
end_control_volume

control_volume
obj_type                             OBJ_CV
name                                 WW
air_volume                           1.442e+005
water_volume                 1.373e+005
surface_area                 0
has_recirc_filter                    false
removal_rate_to_waterpool
Time   NobleGas     ElemIodine   OrgIodine    PartIodine   Solubles     Insolubles
720    0      0      0      0      0      0
end_removal_rate_to_waterpool
frac_4_daughter_resusp_from_water
Time   NobleGas     ElemIodine   OrgIodine    PartIodine   Solubles     Insolubles
720    0      0      0      0      0      0
end_frac_4_daughter_resusp_from_water
decontamination_factor
Time   NobleGas     ElemIodine   OrgIodine    PartIodine   Solubles     Insolubles
720    1      1      1      1      1      1
end_decontamination_factor
end_control_volume
```

```
control_volume
obj_type                        OBJ_CV
name                            RB
air_volume                      1.392e+006
water_volume            0
surface_area            0
has_recirc_filter               false
end_control_volume

control_volume
obj_type                        OBJ_CV
name                            SP
air_volume                      1.373e+005
water_volume            0
surface_area            0
has_recirc_filter               false
end_control_volume

control_volume
obj_type                        OBJ_CR
name                            Control_Room
air_volume                      2.14e+005
water_volume            0
surface_area            0
has_recirc_filter               false
breathing_rate
Time   (hr)   Value  (cms)
720           0.00035
end_breathing_rate
occupancy_factor
Time   (hr)   Value  (frac)
24            1
96            0.6
720           0.4
end_occupancy_factor
end_control_volume

junction
junction_type           AIR_JUNCTION
downstream_location     AIR_SPACE
upstream                        CORE
downstream                      DW
has_filter                      false
flow_rate
Time   (hr)   Value  (cfm)
720    1
end_flow_rate
end_junction

junction
junction_type           AIR_JUNCTION
downstream_location     AIR_SPACE
upstream                        CORE
downstream                      SP
has_filter                      false
flow_rate
Time   (hr)   Value  (cfm)
720    1
end_flow_rate
end_junction

junction
junction_type           AIR_JUNCTION
```

```
downstream_location        WATER_POOL
upstream                          DW
downstream                        WW
has_filter                        false
flow_rate
Time   (hr)   Value  (cfm)
2.033         0
720           1.442e5
end_flow_rate
end_junction

junction
junction_type              AIR_JUNCTION
downstream_location        AIR_SPACE
upstream                          WW
downstream                        DW
has_filter                        false
flow_rate
Time   (hr)   Value  (cfm)
2.033         0
720           1.442e5
end_flow_rate
end_junction

junction
junction_type              AIR_JUNCTION
downstream_location        AIR_SPACE
upstream                          DW
downstream                        environment
has_filter                        false
flow_rate
Time   (hr)   Value  (cfm)


end_flow_rate
X_over_Q_4_ctrl_room
Time   (hr)   Value  (s/m*3)
2      3.17e-3
8      2.4e-3
24     1.19e-3
96     7.91e-4
720    5.87e-4
end_X_over_Q_4_ctrl_room
X_over_Q_4_site_boundary
Time   (hr)   Value  (s/m*3)
720    1.8e-4
end_X_over_Q_4_site_boundary
X_over_Q_4_low_population_zone
Time   (hr)   Value  (s/m*3)
8      5.04e-5
24     3.76e-5
96     1.99e-5
720    7.97e-6
end_X_over_Q_4_low_population_zone
end_junction

junction
junction_type              AIR_JUNCTION
downstream_location        AIR_SPACE
upstream                          DW
downstream                        environment
has_filter                        true
flow_rate
```

```
Time   (hr)   Value  (cfm)


end_flow_rate
filter_efficiency
Time   NobleGas     ElemIodine    OrgIodine     PartIodine    Solubles      Insolubles

end_filter_efficiency
frac_4_daughter_resusp
Time   NobleGas     ElemIodine    OrgIodine     PartIodine    Solubles      Insolubles

end_frac_4_daughter_resusp
X_over_Q_4_ctrl_room
Time   (hr)   Value  (s/m*3)
2      3.17e-3
8      2.4e-3
24     1.19e-3
96     7.91e-4
720    5.87e-4
end_X_over_Q_4_ctrl_room
X_over_Q_4_site_boundary
Time   (hr)   Value  (s/m*3)
720    1.8e-4
end_X_over_Q_4_site_boundary
X_over_Q_4_low_population_zone
Time   (hr)   Value  (s/m*3)
8      5.04e-5
24     3.76e-5
96     1.99e-5
720    7.97e-6
end_X_over_Q_4_low_population_zone
end_junction

junction
junction_type              AIR_JUNCTION
downstream_location        AIR_SPACE
upstream                         DW
downstream                       RB
has_filter                       false
flow_rate
Time   (hr)   Value  (cfm)
0.167         0
24            0.696
720           0.348
end_flow_rate
end_junction

junction
junction_type                    AIR_JUNCTION
downstream_location              AIR_SPACE
upstream                         WW
downstream                       RB
has_filter                       false
flow_rate
Time (hr) Value (cfm)
0.167  0
24            0.5
720           0.25
end_flow_rate
end_junction

junction
junction_type              AIR_JUNCTION
```

```
downstream_location        AIR_SPACE
upstream                          DW
downstream                        environment
has_filter                        false
flow_rate
Time   (hr)   Value  (cfm)



end_flow_rate
X_over_Q_4_ctrl_room
Time   (hr)   Value  (s/m*3)
2      6.8e-4
8      4.92e-4
24     2.53e-4
96     1.45e-4
720    1.19e-4
end_X_over_Q_4_ctrl_room
X_over_Q_4_site_boundary
Time   (hr)   Value  (s/m*3)
720    1.8e-4
end_X_over_Q_4_site_boundary
X_over_Q_4_low_population_zone
Time   (hr)   Value  (s/m*3)
8      5.04e-5
24     3.76e-5
96     1.99e-5
720    7.97e-6
end_X_over_Q_4_low_population_zone
end_junction

junction
junction_type                     AIR_JUNCTION
downstream_location               AIR_SPACE
upstream                          WW
downstream                        environment
has_filter                        false
flow_rate
Time (hr) Value (cfm)
0.167        0.541
24           0.04
720          0.02
end_flow_rate
X_over_Q_4_ctrl_room
Time   (hr)   Value  (s/m*3)
2      6.8e-4
8      4.92e-4
24     2.53e-4
96     1.45e-4
720    1.19e-4
end_X_over_Q_4_ctrl_room
X_over_Q_4_site_boundary
Time   (hr)   Value  (s/m*3)
720    1.8e-4
end_X_over_Q_4_site_boundary
X_over_Q_4_low_population_zone
Time   (hr)   Value  (s/m*3)
8      5.04e-5
24     3.76e-5
96     1.99e-5
720    7.97e-6
end_X_over_Q_4_low_population_zone
end_junction
```

```
junction
junction_type              AIR_JUNCTION
downstream_location        AIR_SPACE
upstream                         SP
downstream                       RB
has_filter                       true
flow_rate
Time   (hr)   Value  (cfm)
0.25   0
720    0.268
end_flow_rate
filter_efficiency
Time   NobleGas     ElemIodine    OrgIodine     PartIodine    Solubles      Insolubles
720    0.5    0      0      0.99999       0      0
end_filter_efficiency
end_junction

junction
junction_type              AIR_JUNCTION
downstream_location        AIR_SPACE
upstream                         RB
downstream                       environment
has_filter                       true
flow_rate
Time   (hr)   Value  (cfm)
720    5000
end_flow_rate
filter_efficiency
Time   NobleGas     ElemIodine    OrgIodine     PartIodine    Solubles      Insolubles
0.167  0      0      0      0      0      0
720    0      0.98   0.98   0.98   0.98   0.98
end_filter_efficiency
frac_4_daughter_resusp
Time   NobleGas     ElemIodine    OrgIodine     PartIodine    Solubles      Insolubles
720    1      1      0      0      0      0
end_frac_4_daughter_resusp
X_over_Q_4_ctrl_room
Time   (hr)   Value  (s/m*3)
2      5.79e-4
8      2.86e-4
24     1.79e-4
96     1.25e-4
720    9.15e-5
end_X_over_Q_4_ctrl_room
X_over_Q_4_site_boundary
Time   (hr)   Value  (s/m*3)
720    1.8e-4
end_X_over_Q_4_site_boundary
X_over_Q_4_low_population_zone
Time   (hr)   Value  (s/m*3)
8      5.04e-5
24     3.76e-5
96     1.99e-5
720    7.97e-6
end_X_over_Q_4_low_population_zone
end_junction

junction
junction_type              AIR_JUNCTION
downstream_location        AIR_SPACE
upstream                         environment
downstream                       Control_Room
```

```
has_filter                          false
flow_rate
Time   (hr)   Value  (cfm)
0.5    250
720    125
end_flow_rate
end_junction

junction
junction_type               AIR_JUNCTION
downstream_location         AIR_SPACE
upstream                            Control_Room
downstream                          environment
has_filter                          false
flow_rate
Time   (hr)   Value  (cfm)
0.5    2050
720    1025
end_flow_rate
X_over_Q_4_ctrl_room
Time   (hr)   Value  (s/m*3)
720    0
end_X_over_Q_4_ctrl_room
X_over_Q_4_site_boundary
Time   (hr)   Value  (s/m*3)
720    0
end_X_over_Q_4_site_boundary
X_over_Q_4_low_population_zone
Time   (hr)   Value  (s/m*3)
720    0
end_X_over_Q_4_low_population_zone
end_junction

environment
breathing_rate_sb
Time (hr)     Value (cms)
8      0.00035
720    0.0
end_breathing_rate_sb
breathing_rate_lpz
Time (hr)     Value (cms)
8      0.00035
24     0.00018
720    0.00023
end_breathing_rate_lpz
end_environment
```

APPENDIX B

STARDOSE "LIBFILE1.TXT" FILE

Note: This file is common to both "input.dat" files presented in Appendix A.

n_isotopes	76	n_isotope_groups	11														
Kr83m	N_Gas	NONE	NONE	3.57E+03	1.04E-04	0	4.20E-06	0	0	0	0	0	0	0	0	0	0
Kr85m	N_Gas	NONE	NONE	7.35E+03	4.39E-05	0	0.03069	0	0	0.05	0	0.22	0	0	0	0	0
Kr85	N_Gas	NONE	NONE	4.11E+02	2.04E-09	0	0.00048	0	0	0.05	0	0.22	0	0	0	0	0
Kr87	N_Gas	NONE	NONE	1.34E+04	1.52E-04	0	0.14626	0	0	0.34	0	1.48	0	0	0	0	0
Kr88	N_Gas	NONE	NONE	1.90E+04	6.88E-05	0	0.3708	0	0	0.08	0	0.35	0	0	0	0	0
Kr89	N_Gas	NONE	NONE	2.20E+04	3.63E-03	0	0.303	0	0	0.35	0	1.52	0	0	0	0	0
Xe131m	N_Gas	NONE	NONE	2.79E+02	6.68E-07	0	0.00152	0	0	0.02	0	0.04	0	0	0	0	0
Xe133m	N_Gas	NONE	NONE	1.66E+03	3.49E-06	0	0.00554	0	0	0.03	0	0.13	0	0	0	0	0
Xe133	N_Gas	I133Part	NONE	5.43E+04	1.52E-06	0	0.00625	0	0	0.01	0	0.04	0	0	0	0	0
Xe135m	N_Gas	NONE	NONE	1.11E+04	7.40E-04	0	0.07756	0	0	0.02	0	0.09	0	0	0	0	0
Xe135	N_Gas	I135Part	NONE	1.31E+04	2.09E-05	0	0.0482	0	0	0.06	0	0.26	0	0	0	0	0
Xe137	N_Gas	NONE	NONE	4.65E+04	2.96E-03	0	0.0283	0	0	0.46	0	2	0	0	0	0	0
Xe138	N_Gas	NONE	NONE	3.59E+04	6.80E-04	0	0.19776	0	0	0.15	0	0.65	0	0	0	0	0
I131Org	Org_I	NONE	NONE	2.79E+04	9.96E-07	1080400	0.0559	0	0	0.03	32893	0.13	0	0	0	0	0
I132Org	Org_I	NONE	NONE	3.94E+04	8.27E-05	6438	0.355	0	0	0.11	381.1	0.48	0	0	0	0	0
I133Org	Org_I	NONE	NONE	5.44E+04	9.22E-06	179820	0.0911	0	0	0.09	5846	0.39	0	0	0	0	0
I134Org	Org_I	NONE	NONE	6.03E+04	2.23E-04	1065.6	0.411	0	0	0.14	131.35	0.61	0	0	0	0	0
I135Org	Org_I	NONE	NONE	5.03E+04	2.86E-05	31302	0.249	0	0	0.08	1228.4	0.35	0	0	0	0	0
I131Elem	Elm_I	Te131m	NONE	2.79E+04	9.96E-07	1080400	0.0559	0	0	0.03	32893	0.13	0	0	0	0	0
I132Elem	Elm_I	Te132	NONE	3.94E+04	8.27E-05	6438	0.355	0	0	0.11	381.1	0.48	0	0	0	0	0
I133Elem	Elm_I	NONE	NONE	5.44E+04	9.22E-06	179820	0.0911	0	0	0.09	5846	0.39	0	0	0	0	0
I134Elem	Elm_I	NONE	NONE	6.03E+04	2.23E-04	1065.6	0.411	0	0	0.14	131.35	0.61	0	0	0	0	0
I135Elem	Elm_I	NONE	NONE	5.03E+04	2.86E-05	31302	0.249	0	0	0.08	1228.4	0.35	0	0	0	0	0
I131Part	Prt_I	NONE	NONE	2.79E+04	9.96E-07	1080400	0.0559	0	0	0.03	32893	0.13	0	0	0	0	0
I132Part	Prt_I	NONE	NONE	3.94E+04	8.27E-05	6438	0.355	0	0	0.11	381.1	0.48	0	0	0	0	0
I133Part	Prt_I	NONE	Xe133	5.44E+04	9.22E-06	179820	0.0911	0	0	0.09	5846	0.39	0	0	0	0	0
I134Part	Prt_I	NONE	NONE	6.03E+04	2.23E-04	1065.6	0.411	0	0	0.14	131.35	0.61	0	0	0	0	0
I135Part	Prt_I	NONE	Xe135	5.03E+04	2.86E-05	31302	0.249	0	0	0.08	1228.4	0.35	0	0	0	0	0

Rb86	CsGrp	NONE	NONE	4.47E+01	4.29E-07	4921	0 0 0	0	6623	0 0 0 0 0 0
Cs134	CsGrp	NONE	NONE	6.27E+03	9.55E-09	41070	0 0 0	0	46250	0 0 0 0 0 0
Cs136	CsGrp	NONE	NONE	1.39E+03	6.16E-07	6401	0 0 0	0	7326	0 0 0 0 0 0
Cs137	CsGrp	NONE	Ba137m	5.05E+03	7.30E-10	29341	0 0 0	0	31931	0 0 0 0 0 0
Sb127	TeGrp	NONE	Te127	3.31E+03	2.07E-06	227.55	0 0 0	0	6031	0 0 0 0 0 0
Sb129	TeGrp	NONE	Te129	9.48E+03	4.42E-05	35.964	0 0 0	0	643.8	0 0 0 0 0 0
Te127m	TeGrp	NONE	NONE	4.66E+02	7.64E-08	357.42	0 0 0	0	21497	0 0 0 0 0 0
Te127	TeGrp	Sb127	NONE	3.31E+03	2.06E-05	6.808	0 0 0	0	318.2	0 0 0 0 0 0
Te129m	TeGrp	NONE	NONE	1.39E+03	2.36E-07	577.2	0 0 0	0	23939	0 0 0 0 0 0
Te129	TeGrp	Sb129	NONE	8.90E+03	1.57E-04	1.8833	0 0 0	0	77.33	0 0 0 0 0 0
Te131m	TeGrp	NONE	I131Elem	4.20E+03	6.42E-06	133570	0 0 0	0	6401	0 0 0 0 0 0
Te132	TeGrp	NONE	I132Elem	3.99E+04	2.51E-06	232360	0 0 0	0	9435	0 0 0 0 0 0
Ba137m	BaGrp	Cs137	NONE	3.01E+03	4.53E-03	0	0 0 0	0	0	0 0 0 0 0 0
Ba139	BaGrp	NONE	NONE	4.72E+04	1.39E-04	8.88	0 0 0	0	171.68	0 0 0 0 0 0
Ba140	BaGrp	NONE	La140	4.58E+04	6.27E-07	947.2	0 0 0	0	3737	0 0 0 0 0 0
Mo99	NMtls	NONE	Tc99m	4.90E+04	2.87E-06	56.24	0 0 0	0	3959	0 0 0 0 0 0
Tc99m	NMtls	Mo99	NONE	4.34E+04	3.18E-05	185.37	0 0 0	0	32.56	0 0 0 0 0 0
Ru103	NMtls	NONE	NONE	4.70E+04	2.03E-07	950.9	0 0 0	0	8954	0 0 0 0 0 0
Ru105	NMtls	NONE	Rh105	3.46E+04	4.22E-05	15.355	0 0 0	0	455.1	0 0 0 0 0 0
Ru106	NMtls	NONE	NONE	2.04E+04	2.20E-08	6364	0 0 0	0	477300	0 0 0 0 0 0
Rh105	NMtls	Ru105	NONE	3.27E+04	5.40E-06	10.656	0 0 0	0	954.6	0 0 0 0 0 0
Y90	LaGrp	Sr90	NONE	2.04E+03	2.99E-06	1.9129	0 0 0	0	8436	0 0 0 0 0 0
Y91	LaGrp	Sr91	NONE	2.73E+04	1.38E-07	31.45	0 0 0	0	48840	0 0 0 0 0 0
Y92	LaGrp	Sr92	NONE	2.90E+04	5.35E-05	3.885	0 0 0	0	780.7	0 0 0 0 0 0
Y93	LaGrp	NONE	NONE	3.56E+04	1.91E-05	3.4262	0 0 0	0	2153.4	0 0 0 0 0 0
Zr95	LaGrp	NONE	Nb95	4.27E+04	1.27E-07	4292	0 0 0	0	23347	0 0 0 0 0 0
Zr97	LaGrp	NONE	NONE	4.33E+04	1.13E-05	85.47	0 0 0	0	4329	0 0 0 0 0 0
Nb95	LaGrp	Zr95	NONE	4.27E+04	2.29E-07	1324.6	0 0 0	0	5809	0 0 0 0 0 0
La140	LaGrp	Ba140	NONE	4.71E+04	4.77E-06	254.19	0 0 0	0	4847	0 0 0 0 0 0
La141	LaGrp	NONE	Ce141	4.36E+04	4.94E-05	9.065	0 0 0	0	562.4	0 0 0 0 0 0
La142	LaGrp	NONE	NONE	4.17E+04	1.26E-04	18.167	0 0 0	0	203.5	0 0 0 0 0 0
Pr143	LaGrp	Ce143	NONE	3.78E+04	5.85E-07	6.20E-06	0 0 0	0	8103	0 0 0 0 0 0
Nd147	LaGrp	NONE	NONE	1.71E+04	7.10E-07	67.34	0 0 0	0	6845	0 0 0 0 0 0
Am241	LaGrp	NONE	NONE	7.67E+00	4.80E-11	5920	0 0 0	0	4.40E+08	0 0 0 0 0 0
Cm242	LaGrp	NONE	NONE	1.74E+03	4.94E-08	3481.7	0 0 0	0	1.70E+07	0 0 0 0 0 0

Cm244	LaGrp	NONE	NONE	1.41E+02	1.25E-09	3737	0	0	0	0	2.50E+08	0	0	0	0	0	0
Ce141	CeGrp	La141	NONE	4.43E+04	2.51E-07	94.35	0	0	0	0	8954	0	0	0	0	0	0
Ce143	CeGrp	NONE	Pr143	4.01E+04	6.03E-06	23.051	0	0	0	0	3389.2	0	0	0	0	0	0
Ce144	CeGrp	NONE	NONE	3.25E+04	2.77E-08	1080.4	0	0	0	0	373700	0	0	0	0	0	0
Np239	CeGrp	NONE	NONE	7.01E+05	3.44E-06	28.194	0	0	0	0	2508.6	0	0	0	0	0	0
Pu238	CeGrp	NONE	NONE	9.56E+01	2.40E-10	3559.4	0	0	0	0	3.90E+08	0	0	0	0	0	0
Pu239	CeGrp	NONE	NONE	1.89E+01	9.00E-13	3341.1	0	0	0	0	4.30E+08	0	0	0	0	0	0
Pu240	CeGrp	NONE	NONE	3.11E+01	3.30E-12	3348.5	0	0	0	0	4.30E+08	0	0	0	0	0	0
Pu241	CeGrp	NONE	NONE	8.85E+03	1.67E-09	45.88	0	0	0	0	8251000	0	0	0	0	0	0
Sr89	SrGrp	NONE	NONE	2.02E+04	1.59E-07	1539.2	0	0	0	0	6512	0	0	0	0	0	0
Sr90	SrGrp	NONE	Y90	3.34E+03	8.00E-10	9768	0	0	0	0	239390	0	0	0	0	0	0
Sr91	SrGrp	NONE	Y91	2.59E+04	2.01E-05	150.96	0	0	0	0	932.4	0	0	0	0	0	0
Sr92	SrGrp	NONE	Y92	3.01E+04	7.29E-05	81.03	0	0	0	0	629	0	0	0	0	0	0

APPENDIX C

STARDOSE "RESULTS.OUT" FILES
CR AND LPZ DOSES and AIRBORNE ACTIVITY

Excerpts from Results.out File – 30-day time edit - Control Room Filtered Inleakage Case:

```
STARDOSE 1.0 (c) 1996 Polestar Applied Technology, Inc.
08:45:14 AM October 13, 2001

edit time 720.000000
DW
```

	thyroid	wbody	skin	CEDE
Total dose:	0.00E+000	0.00E+000	0.00E+000	0.00E+000
Noble gas	0.00E+000	0.00E+000	0.00E+000	0.00E+000
Org iodine	0.00E+000	0.00E+000	0.00E+000	0.00E+000
Elem iodine	0.00E+000	0.00E+000	0.00E+000	0.00E+000
Part iodine	0.00E+000	0.00E+000	0.00E+000	0.00E+000
Cesium	0.00E+000	0.00E+000	0.00E+000	0.00E+000
Tellurium	0.00E+000	0.00E+000	0.00E+000	0.00E+000
Barium	0.00E+000	0.00E+000	0.00E+000	0.00E+000
Noble metal	0.00E+000	0.00E+000	0.00E+000	0.00E+000
Lanthanides	0.00E+000	0.00E+000	0.00E+000	0.00E+000
Cerium	0.00E+000	0.00E+000	0.00E+000	0.00E+000
Strontinum	0.00E+000	0.00E+000	0.00E+000	0.00E+000

	air_space	water_pool	surface	recirc	thyroid	wbody	skin	CEDE
Kr83m	3.56E-111	0.00E+000	0.00E+000	0.00E+000	0.00E+000	0.00E+000	0.00E+000	0.00E+000
Kr85m	2.78E-043	0.00E+000	0.00E+000	0.00E+000	0.00E+000	0.00E+000	0.00E+000	0.00E+000
Kr85	7.58E+005	0.00E+000	0.00E+000	0.00E+000	0.00E+000	0.00E+000	0.00E+000	0.00E+000
Kr87	1.94E-164	0.00E+000	0.00E+000	0.00E+000	0.00E+000	0.00E+000	0.00E+000	0.00E+000
Kr88	1.22E-070	0.00E+000	0.00E+000	0.00E+000	0.00E+000	0.00E+000	0.00E+000	0.00E+000
Kr89	6.67E-322	0.00E+000	0.00E+000	0.00E+000	0.00E+000	0.00E+000	0.00E+000	0.00E+000
Xe131m	9.16E+004	0.00E+000	0.00E+000	0.00E+000	0.00E+000	0.00E+000	0.00E+000	0.00E+000
Xe133m	3.63E+002	0.00E+000	0.00E+000	0.00E+000	0.00E+000	0.00E+000	0.00E+000	0.00E+000
Xe133	2.61E+006	0.00E+000	0.00E+000	0.00E+000	0.00E+000	0.00E+000	0.00E+000	0.00E+000
Xe135m	2.85E-321	0.00E+000	0.00E+000	0.00E+000	0.00E+000	0.00E+000	0.00E+000	0.00E+000
Xe135	3.66E-016	0.00E+000	0.00E+000	0.00E+000	0.00E+000	0.00E+000	0.00E+000	0.00E+000
Xe137	8.05E-322	0.00E+000	0.00E+000	0.00E+000	0.00E+000	0.00E+000	0.00E+000	0.00E+000
Xe138	3.59E-321	0.00E+000	0.00E+000	0.00E+000	0.00E+000	0.00E+000	0.00E+000	0.00E+000
I131Org	1.76E+003	0.00E+000	0.00E+000	0.00E+000	0.00E+000	0.00E+000	0.00E+000	0.00E+000

I132Org	2.61E-089	0.00E+000	0.00E+000	0.00E+000	0.00E+000	0.00E+000	0.00E+000	0.00E+000
I133Org	1.90E-006	0.00E+000	0.00E+000	0.00E+000	0.00E+000	0.00E+000	0.00E+000	0.00E+000
I134Org	4.76E-247	0.00E+000	0.00E+000	0.00E+000	0.00E+000	0.00E+000	0.00E+000	0.00E+000
I135Org	2.05E-028	0.00E+000	0.00E+000	0.00E+000	0.00E+000	0.00E+000	0.00E+000	0.00E+000
I131Elem	8.67E-001	0.00E+000	1.74E+005	0.00E+000	0.00E+000	0.00E+000	0.00E+000	0.00E+000
I132Elem	1.84E-003	0.00E+000	3.29E+002	0.00E+000	0.00E+000	0.00E+000	0.00E+000	0.00E+000
I133Elem	5.49E-010	0.00E+000	1.18E-004	0.00E+000	0.00E+000	0.00E+000	0.00E+000	0.00E+000
I134Elem	3.40E-251	0.00E+000	2.92E-245	0.00E+000	0.00E+000	0.00E+000	0.00E+000	0.00E+000
I135Elem	6.64E-032	0.00E+000	1.66E-026	0.00E+000	0.00E+000	0.00E+000	0.00E+000	0.00E+000
I131Part	9.99E+000	0.00E+000	2.14E+006	0.00E+000	0.00E+000	0.00E+000	0.00E+000	0.00E+000
I132Part	1.49E-091	0.00E+000	3.22E-086	0.00E+000	0.00E+000	0.00E+000	0.00E+000	0.00E+000
I133Part	1.08E-008	0.00E+000	2.31E-003	0.00E+000	0.00E+000	0.00E+000	0.00E+000	0.00E+000
I134Part	2.36E-249	0.00E+000	5.72E-244	0.00E+000	0.00E+000	0.00E+000	0.00E+000	0.00E+000
I135Part	1.50E-030	0.00E+000	3.26E-025	0.00E+000	0.00E+000	0.00E+000	0.00E+000	0.00E+000
Rb86	5.83E-002	0.00E+000	1.30E+004	0.00E+000	0.00E+000	0.00E+000	0.00E+000	0.00E+000
Cs134	2.43E+001	0.00E+000	5.43E+006	0.00E+000	0.00E+000	0.00E+000	0.00E+000	0.00E+000
Cs136	1.12E+000	0.00E+000	2.50E+005	0.00E+000	0.00E+000	0.00E+000	0.00E+000	0.00E+000
Cs137	2.00E+001	0.00E+000	4.47E+006	0.00E+000	0.00E+000	0.00E+000	0.00E+000	0.00E+000
Sb127	1.52E-002	0.00E+000	2.72E+003	0.00E+000	0.00E+000	0.00E+000	0.00E+000	0.00E+000
Sb129	1.80E-049	0.00E+000	2.93E-044	0.00E+000	0.00E+000	0.00E+000	0.00E+000	0.00E+000
Te127m	3.76E-001	0.00E+000	6.73E+004	0.00E+000	0.00E+000	0.00E+000	0.00E+000	0.00E+000
Te127	1.70E-003	0.00E+000	3.04E+002	0.00E+000	0.00E+000	0.00E+000	0.00E+000	0.00E+000
Te129m	7.42E-001	0.00E+000	1.33E+005	0.00E+000	0.00E+000	0.00E+000	0.00E+000	0.00E+000
Te129	5.25E-050	0.00E+000	1.15E-044	0.00E+000	0.00E+000	0.00E+000	0.00E+000	0.00E+000
Te131m	2.45E-007	0.00E+000	4.38E-002	0.00E+000	0.00E+000	0.00E+000	0.00E+000	0.00E+000
Te132	5.87E-002	0.00E+000	1.05E+004	0.00E+000	0.00E+000	0.00E+000	0.00E+000	0.00E+000
Ba137m	3.22E-006	0.00E+000	7.21E-001	0.00E+000	0.00E+000	0.00E+000	0.00E+000	0.00E+000
Ba139	5.20E-156	0.00E+000	1.13E-150	0.00E+000	0.00E+000	0.00E+000	0.00E+000	0.00E+000
Ba140	3.58E+000	0.00E+000	6.40E+005	0.00E+000	0.00E+000	0.00E+000	0.00E+000	0.00E+000
Mo99	1.43E-003	0.00E+000	2.57E+002	0.00E+000	0.00E+000	0.00E+000	0.00E+000	0.00E+000
Tc99m	1.42E-004	0.00E+000	2.55E+001	0.00E+000	0.00E+000	0.00E+000	0.00E+000	0.00E+000
Ru103	1.38E+000	0.00E+000	2.47E+005	0.00E+000	0.00E+000	0.00E+000	0.00E+000	0.00E+000
Ru105	5.39E-048	0.00E+000	9.65E-043	0.00E+000	0.00E+000	0.00E+000	0.00E+000	0.00E+000
Ru106	9.60E-001	0.00E+000	1.72E+005	0.00E+000	0.00E+000	0.00E+000	0.00E+000	0.00E+000
Rh105	2.65E-006	0.00E+000	4.92E-001	0.00E+000	0.00E+000	0.00E+000	0.00E+000	0.00E+000
Y90	3.57E-004	0.00E+000	6.39E+001	0.00E+000	0.00E+000	0.00E+000	0.00E+000	0.00E+000
Y91	6.40E+000	0.00E+000	1.19E+006	0.00E+000	0.00E+000	0.00E+000	0.00E+000	0.00E+000
Y92	2.36E-059	0.00E+000	4.39E-054	0.00E+000	0.00E+000	0.00E+000	0.00E+000	0.00E+000
Y93	1.85E-023	0.00E+000	7.79E-018	0.00E+000	0.00E+000	0.00E+000	0.00E+000	0.00E+000
Zr95	1.19E-001	0.00E+000	2.13E+004	0.00E+000	0.00E+000	0.00E+000	0.00E+000	0.00E+000
Zr97	3.18E-014	0.00E+000	5.72E-009	0.00E+000	0.00E+000	0.00E+000	0.00E+000	0.00E+000
Nb95	1.26E-001	0.00E+000	2.25E+004	0.00E+000	0.00E+000	0.00E+000	0.00E+000	0.00E+000
La140	5.41E-001	0.00E+000	9.68E+004	0.00E+000	0.00E+000	0.00E+000	0.00E+000	0.00E+000
La141	4.14E-057	0.00E+000	7.44E-052	0.00E+000	0.00E+000	0.00E+000	0.00E+000	0.00E+000
La142	1.18E-143	0.00E+000	4.21E-138	0.00E+000	0.00E+000	0.00E+000	0.00E+000	0.00E+000
Pr143	1.25E-001	0.00E+000	2.25E+004	0.00E+000	0.00E+000	0.00E+000	0.00E+000	0.00E+000

Nd147	1.05E-002	0.00E+000	1.88E+003	0.00E+000	0.00E+000	0.00E+000	0.00E+000	0.00E+000
Am241	2.97E-005	0.00E+000	5.32E+000	0.00E+000	0.00E+000	0.00E+000	0.00E+000	0.00E+000
Cm242	5.94E-003	0.00E+000	1.06E+003	0.00E+000	0.00E+000	0.00E+000	0.00E+000	0.00E+000
Cm244	5.45E-004	0.00E+000	9.74E+001	0.00E+000	0.00E+000	0.00E+000	0.00E+000	0.00E+000
Ce141	2.91E-001	0.00E+000	5.34E+004	0.00E+000	0.00E+000	0.00E+000	0.00E+000	0.00E+000
Ce143	6.43E-008	0.00E+000	1.15E-002	0.00E+000	0.00E+000	0.00E+000	0.00E+000	0.00E+000
Ce144	2.98E-001	0.00E+000	5.32E+004	0.00E+000	0.00E+000	0.00E+000	0.00E+000	0.00E+000
Np239	9.26E-004	0.00E+000	1.66E+002	0.00E+000	0.00E+000	0.00E+000	0.00E+000	0.00E+000
Pu238	9.40E-004	0.00E+000	1.68E+002	0.00E+000	0.00E+000	0.00E+000	0.00E+000	0.00E+000
Pu239	1.86E-004	0.00E+000	3.33E+001	0.00E+000	0.00E+000	0.00E+000	0.00E+000	0.00E+000
Pu240	3.06E-004	0.00E+000	5.47E+001	0.00E+000	0.00E+000	0.00E+000	0.00E+000	0.00E+000
Pu241	8.67E-002	0.00E+000	1.55E+004	0.00E+000	0.00E+000	0.00E+000	0.00E+000	0.00E+000
Sr89	5.31E+000	0.00E+000	9.49E+005	0.00E+000	0.00E+000	0.00E+000	0.00E+000	0.00E+000
Sr90	1.32E+000	0.00E+000	2.36E+005	0.00E+000	0.00E+000	0.00E+000	0.00E+000	0.00E+000
Sr91	2.43E-022	0.00E+000	4.34E-017	0.00E+000	0.00E+000	0.00E+000	0.00E+000	0.00E+000
Sr92	1.03E-081	0.00E+000	1.85E-076	0.00E+000	0.00E+000	0.00E+000	0.00E+000	0.00E+000

WW

	thyroid	wbody	skin	CEDE
Total dose:	0.00E+000	0.00E+000	0.00E+000	0.00E+000
Noble gas	0.00E+000	0.00E+000	0.00E+000	0.00E+000
Org iodine	0.00E+000	0.00E+000	0.00E+000	0.00E+000
Elem iodine	0.00E+000	0.00E+000	0.00E+000	0.00E+000
Part iodine	0.00E+000	0.00E+000	0.00E+000	0.00E+000
Cesium	0.00E+000	0.00E+000	0.00E+000	0.00E+000
Tellurium	0.00E+000	0.00E+000	0.00E+000	0.00E+000
Barium	0.00E+000	0.00E+000	0.00E+000	0.00E+000
Noble metal	0.00E+000	0.00E+000	0.00E+000	0.00E+000
Lanthanides	0.00E+000	0.00E+000	0.00E+000	0.00E+000
Cerium	0.00E+000	0.00E+000	0.00E+000	0.00E+000
Strontinum	0.00E+000	0.00E+000	0.00E+000	0.00E+000

	air_space	water_pool	surface	recirc	thyroid	wbody	skin	CEDE
Kr83m	6.08E-111	0.00E+000	0.00E+000	0.00E+000	0.00E+000	0.00E+000	0.00E+000	0.00E+000
Kr85m	6.16E-043	0.00E+000	0.00E+000	0.00E+000	0.00E+000	0.00E+000	0.00E+000	0.00E+000
Kr85	5.45E+005	0.00E+000	0.00E+000	0.00E+000	0.00E+000	0.00E+000	0.00E+000	0.00E+000
Kr87	1.41E-164	0.00E+000	0.00E+000	0.00E+000	0.00E+000	0.00E+000	0.00E+000	0.00E+000
Kr88	9.40E-071	0.00E+000	0.00E+000	0.00E+000	0.00E+000	0.00E+000	0.00E+000	0.00E+000
Kr89	6.62E-322	0.00E+000	0.00E+000	0.00E+000	0.00E+000	0.00E+000	0.00E+000	0.00E+000
Xe131m	6.58E+004	0.00E+000	0.00E+000	0.00E+000	0.00E+000	0.00E+000	0.00E+000	0.00E+000
Xe133m	2.61E+002	0.00E+000	0.00E+000	0.00E+000	0.00E+000	0.00E+000	0.00E+000	0.00E+000
Xe133	1.88E+006	0.00E+000	0.00E+000	0.00E+000	0.00E+000	0.00E+000	0.00E+000	0.00E+000
Xe135m	2.20E-321	0.00E+000	0.00E+000	0.00E+000	0.00E+000	0.00E+000	0.00E+000	0.00E+000
Xe135	2.52E-016	0.00E+000	0.00E+000	0.00E+000	0.00E+000	0.00E+000	0.00E+000	0.00E+000
Xe137	6.87E-322	0.00E+000	0.00E+000	0.00E+000	0.00E+000	0.00E+000	0.00E+000	0.00E+000

Xe138	2.76E-321	0.00E+000	0.00E+000	0.00E+000	0.00E+000	0.00E+000	0.00E+000	0.00E+000
I131Org	1.27E+003	0.00E+000	0.00E+000	0.00E+000	0.00E+000	0.00E+000	0.00E+000	0.00E+000
I132Org	1.94E-089	0.00E+000	0.00E+000	0.00E+000	0.00E+000	0.00E+000	0.00E+000	0.00E+000
I133Org	1.37E-006	0.00E+000	0.00E+000	0.00E+000	0.00E+000	0.00E+000	0.00E+000	0.00E+000
I134Org	3.35E-247	0.00E+000	0.00E+000	0.00E+000	0.00E+000	0.00E+000	0.00E+000	0.00E+000
I135Org	2.56E-028	0.00E+000	0.00E+000	0.00E+000	0.00E+000	0.00E+000	0.00E+000	0.00E+000
I131Elem	6.23E-001	0.00E+000	0.00E+000	0.00E+000	0.00E+000	0.00E+000	0.00E+000	0.00E+000
I132Elem	1.32E-003	0.00E+000	0.00E+000	0.00E+000	0.00E+000	0.00E+000	0.00E+000	0.00E+000
I133Elem	3.95E-010	0.00E+000	0.00E+000	0.00E+000	0.00E+000	0.00E+000	0.00E+000	0.00E+000
I134Elem	2.00E-250	0.00E+000	0.00E+000	0.00E+000	0.00E+000	0.00E+000	0.00E+000	0.00E+000
I135Elem	6.68E-032	0.00E+000	0.00E+000	0.00E+000	0.00E+000	0.00E+000	0.00E+000	0.00E+000
I131Part	7.18E+000	0.00E+000	0.00E+000	0.00E+000	0.00E+000	0.00E+000	0.00E+000	0.00E+000
I132Part	1.09E-091	0.00E+000	0.00E+000	0.00E+000	0.00E+000	0.00E+000	0.00E+000	0.00E+000
I133Part	7.74E-009	0.00E+000	0.00E+000	0.00E+000	0.00E+000	0.00E+000	0.00E+000	0.00E+000
I134Part	2.23E-249	0.00E+000	0.00E+000	0.00E+000	0.00E+000	0.00E+000	0.00E+000	0.00E+000
I135Part	1.12E-030	0.00E+000	0.00E+000	0.00E+000	0.00E+000	0.00E+000	0.00E+000	0.00E+000
Rb86	4.19E-002	0.00E+000	0.00E+000	0.00E+000	0.00E+000	0.00E+000	0.00E+000	0.00E+000
Cs134	1.74E+001	0.00E+000	0.00E+000	0.00E+000	0.00E+000	0.00E+000	0.00E+000	0.00E+000
Cs136	8.03E-001	0.00E+000	0.00E+000	0.00E+000	0.00E+000	0.00E+000	0.00E+000	0.00E+000
Cs137	1.44E+001	0.00E+000	0.00E+000	0.00E+000	0.00E+000	0.00E+000	0.00E+000	0.00E+000
Sb127	1.10E-002	0.00E+000	0.00E+000	0.00E+000	0.00E+000	0.00E+000	0.00E+000	0.00E+000
Sb129	1.02E-049	0.00E+000	0.00E+000	0.00E+000	0.00E+000	0.00E+000	0.00E+000	0.00E+000
Te127m	2.71E-001	0.00E+000	0.00E+000	0.00E+000	0.00E+000	0.00E+000	0.00E+000	0.00E+000
Te127	1.22E-003	0.00E+000	0.00E+000	0.00E+000	0.00E+000	0.00E+000	0.00E+000	0.00E+000
Te129m	5.34E-001	0.00E+000	0.00E+000	0.00E+000	0.00E+000	0.00E+000	0.00E+000	0.00E+000
Te129	5.79E-050	0.00E+000	0.00E+000	0.00E+000	0.00E+000	0.00E+000	0.00E+000	0.00E+000
Te131m	1.76E-007	0.00E+000	0.00E+000	0.00E+000	0.00E+000	0.00E+000	0.00E+000	0.00E+000
Te132	4.22E-002	0.00E+000	0.00E+000	0.00E+000	0.00E+000	0.00E+000	0.00E+000	0.00E+000
Ba137m	2.32E-006	0.00E+000	0.00E+000	0.00E+000	0.00E+000	0.00E+000	0.00E+000	0.00E+000
Ba139	5.67E-156	0.00E+000	0.00E+000	0.00E+000	0.00E+000	0.00E+000	0.00E+000	0.00E+000
Ba140	2.57E+000	0.00E+000	0.00E+000	0.00E+000	0.00E+000	0.00E+000	0.00E+000	0.00E+000
Mo99	1.03E-003	0.00E+000	0.00E+000	0.00E+000	0.00E+000	0.00E+000	0.00E+000	0.00E+000
Tc99m	1.02E-004	0.00E+000	0.00E+000	0.00E+000	0.00E+000	0.00E+000	0.00E+000	0.00E+000
Ru103	9.95E-001	0.00E+000	0.00E+000	0.00E+000	0.00E+000	0.00E+000	0.00E+000	0.00E+000
Ru105	3.88E-048	0.00E+000	0.00E+000	0.00E+000	0.00E+000	0.00E+000	0.00E+000	0.00E+000
Ru106	6.90E-001	0.00E+000	0.00E+000	0.00E+000	0.00E+000	0.00E+000	0.00E+000	0.00E+000
Rh105	1.90E-006	0.00E+000	0.00E+000	0.00E+000	0.00E+000	0.00E+000	0.00E+000	0.00E+000
Y90	2.57E-004	0.00E+000	0.00E+000	0.00E+000	0.00E+000	0.00E+000	0.00E+000	0.00E+000
Y91	4.60E+000	0.00E+000	0.00E+000	0.00E+000	0.00E+000	0.00E+000	0.00E+000	0.00E+000
Y92	1.69E-059	0.00E+000	0.00E+000	0.00E+000	0.00E+000	0.00E+000	0.00E+000	0.00E+000
Y93	5.63E-023	0.00E+000	0.00E+000	0.00E+000	0.00E+000	0.00E+000	0.00E+000	0.00E+000
Zr95	8.57E-002	0.00E+000	0.00E+000	0.00E+000	0.00E+000	0.00E+000	0.00E+000	0.00E+000
Zr97	2.32E-014	0.00E+000	0.00E+000	0.00E+000	0.00E+000	0.00E+000	0.00E+000	0.00E+000
Nb95	9.05E-002	0.00E+000	0.00E+000	0.00E+000	0.00E+000	0.00E+000	0.00E+000	0.00E+000
La140	3.89E-001	0.00E+000	0.00E+000	0.00E+000	0.00E+000	0.00E+000	0.00E+000	0.00E+000
La141	3.01E-057	0.00E+000	0.00E+000	0.00E+000	0.00E+000	0.00E+000	0.00E+000	0.00E+000

La142	2.86E-143	0.00E+000	0.00E+000	0.00E+000	0.00E+000	0.00E+000	0.00E+000	0.00E+000
Pr143	8.96E-002	0.00E+000	0.00E+000	0.00E+000	0.00E+000	0.00E+000	0.00E+000	0.00E+000
Nd147	7.57E-003	0.00E+000	0.00E+000	0.00E+000	0.00E+000	0.00E+000	0.00E+000	0.00E+000
Am241	2.14E-005	0.00E+000	0.00E+000	0.00E+000	0.00E+000	0.00E+000	0.00E+000	0.00E+000
Cm242	4.27E-003	0.00E+000	0.00E+000	0.00E+000	0.00E+000	0.00E+000	0.00E+000	0.00E+000
Cm244	3.92E-004	0.00E+000	0.00E+000	0.00E+000	0.00E+000	0.00E+000	0.00E+000	0.00E+000
Ce141	2.09E-001	0.00E+000	0.00E+000	0.00E+000	0.00E+000	0.00E+000	0.00E+000	0.00E+000
Ce143	4.63E-008	0.00E+000	0.00E+000	0.00E+000	0.00E+000	0.00E+000	0.00E+000	0.00E+000
Ce144	2.14E-001	0.00E+000	0.00E+000	0.00E+000	0.00E+000	0.00E+000	0.00E+000	0.00E+000
Np239	6.66E-004	0.00E+000	0.00E+000	0.00E+000	0.00E+000	0.00E+000	0.00E+000	0.00E+000
Pu238	6.76E-004	0.00E+000	0.00E+000	0.00E+000	0.00E+000	0.00E+000	0.00E+000	0.00E+000
Pu239	1.34E-004	0.00E+000	0.00E+000	0.00E+000	0.00E+000	0.00E+000	0.00E+000	0.00E+000
Pu240	2.20E-004	0.00E+000	0.00E+000	0.00E+000	0.00E+000	0.00E+000	0.00E+000	0.00E+000
Pu241	6.24E-002	0.00E+000	0.00E+000	0.00E+000	0.00E+000	0.00E+000	0.00E+000	0.00E+000
Sr89	3.82E+000	0.00E+000	0.00E+000	0.00E+000	0.00E+000	0.00E+000	0.00E+000	0.00E+000
Sr90	9.51E-001	0.00E+000	0.00E+000	0.00E+000	0.00E+000	0.00E+000	0.00E+000	0.00E+000
Sr91	1.75E-022	0.00E+000	0.00E+000	0.00E+000	0.00E+000	0.00E+000	0.00E+000	0.00E+000
Sr92	7.44E-082	0.00E+000	0.00E+000	0.00E+000	0.00E+000	0.00E+000	0.00E+000	0.00E+000

RB

	thyroid	wbody	skin	CEDE
Total dose:	0.00E+000	0.00E+000	0.00E+000	0.00E+000
Noble gas	0.00E+000	0.00E+000	0.00E+000	0.00E+000
Org iodine	0.00E+000	0.00E+000	0.00E+000	0.00E+000
Elem iodine	0.00E+000	0.00E+000	0.00E+000	0.00E+000
Part iodine	0.00E+000	0.00E+000	0.00E+000	0.00E+000
Cesium	0.00E+000	0.00E+000	0.00E+000	0.00E+000
Tellurium	0.00E+000	0.00E+000	0.00E+000	0.00E+000
Barium	0.00E+000	0.00E+000	0.00E+000	0.00E+000
Noble metal	0.00E+000	0.00E+000	0.00E+000	0.00E+000
Lanthanides	0.00E+000	0.00E+000	0.00E+000	0.00E+000
Cerium	0.00E+000	0.00E+000	0.00E+000	0.00E+000
Strontinum	0.00E+000	0.00E+000	0.00E+000	0.00E+000

	air_space	water_pool	surface	recirc	thyroid	wbody	skin	CEDE
Kr83m	4.67E-114	0.00E+000	0.00E+000	0.00E+000	0.00E+000	0.00E+000	0.00E+000	0.00E+000
Kr85m	4.38E-046	0.00E+000	0.00E+000	0.00E+000	0.00E+000	0.00E+000	0.00E+000	0.00E+000
Kr85	6.30E+002	0.00E+000	0.00E+000	0.00E+000	0.00E+000	0.00E+000	0.00E+000	0.00E+000
Kr87	1.62E-167	0.00E+000	0.00E+000	0.00E+000	0.00E+000	0.00E+000	0.00E+000	0.00E+000
Kr88	1.05E-073	0.00E+000	0.00E+000	0.00E+000	0.00E+000	0.00E+000	0.00E+000	0.00E+000
Kr89	6.77E-322	0.00E+000	0.00E+000	0.00E+000	0.00E+000	0.00E+000	0.00E+000	0.00E+000
Xe131m	7.61E+001	0.00E+000	0.00E+000	0.00E+000	0.00E+000	0.00E+000	0.00E+000	0.00E+000
Xe133m	3.01E-001	0.00E+000	0.00E+000	0.00E+000	0.00E+000	0.00E+000	0.00E+000	0.00E+000
Xe133	2.79E+003	0.00E+000	0.00E+000	0.00E+000	0.00E+000	0.00E+000	0.00E+000	0.00E+000
Xe135m	3.26E-321	0.00E+000	0.00E+000	0.00E+000	0.00E+000	0.00E+000	0.00E+000	0.00E+000

Xe135	5.72E-019	0.00E+000	0.00E+000	0.00E+000	0.00E+000	0.00E+000	0.00E+000	0.00E+000
Xe137	5.14E-322	0.00E+000	0.00E+000	0.00E+000	0.00E+000	0.00E+000	0.00E+000	0.00E+000
Xe138	3.52E-321	0.00E+000	0.00E+000	0.00E+000	0.00E+000	0.00E+000	0.00E+000	0.00E+000
I131Org	4.85E+000	0.00E+000	0.00E+000	0.00E+000	0.00E+000	0.00E+000	0.00E+000	0.00E+000
I132Org	7.28E-092	0.00E+000	0.00E+000	0.00E+000	0.00E+000	0.00E+000	0.00E+000	0.00E+000
I133Org	5.22E-009	0.00E+000	0.00E+000	0.00E+000	0.00E+000	0.00E+000	0.00E+000	0.00E+000
I134Org	1.30E-249	0.00E+000	0.00E+000	0.00E+000	0.00E+000	0.00E+000	0.00E+000	0.00E+000
I135Org	7.39E-031	0.00E+000	0.00E+000	0.00E+000	0.00E+000	0.00E+000	0.00E+000	0.00E+000
I131Elem	1.09E+002	0.00E+000	0.00E+000	0.00E+000	0.00E+000	0.00E+000	0.00E+000	0.00E+000
I132Elem	1.53E-006	0.00E+000	0.00E+000	0.00E+000	0.00E+000	0.00E+000	0.00E+000	0.00E+000
I133Elem	1.18E-007	0.00E+000	0.00E+000	0.00E+000	0.00E+000	0.00E+000	0.00E+000	0.00E+000
I134Elem	2.92E-248	0.00E+000	0.00E+000	0.00E+000	0.00E+000	0.00E+000	0.00E+000	0.00E+000
I135Elem	1.66E-029	0.00E+000	0.00E+000	0.00E+000	0.00E+000	0.00E+000	0.00E+000	0.00E+000
I131Part	2.97E-002	0.00E+000	0.00E+000	0.00E+000	0.00E+000	0.00E+000	0.00E+000	0.00E+000
I132Part	4.47E-094	0.00E+000	0.00E+000	0.00E+000	0.00E+000	0.00E+000	0.00E+000	0.00E+000
I133Part	3.20E-011	0.00E+000	0.00E+000	0.00E+000	0.00E+000	0.00E+000	0.00E+000	0.00E+000
I134Part	7.95E-252	0.00E+000	0.00E+000	0.00E+000	0.00E+000	0.00E+000	0.00E+000	0.00E+000
I135Part	4.52E-033	0.00E+000	0.00E+000	0.00E+000	0.00E+000	0.00E+000	0.00E+000	0.00E+000
Rb86	4.85E-005	0.00E+000	0.00E+000	0.00E+000	0.00E+000	0.00E+000	0.00E+000	0.00E+000
Cs134	2.02E-002	0.00E+000	0.00E+000	0.00E+000	0.00E+000	0.00E+000	0.00E+000	0.00E+000
Cs136	9.28E-004	0.00E+000	0.00E+000	0.00E+000	0.00E+000	0.00E+000	0.00E+000	0.00E+000
Cs137	1.66E-002	0.00E+000	0.00E+000	0.00E+000	0.00E+000	0.00E+000	0.00E+000	0.00E+000
Sb127	1.27E-005	0.00E+000	0.00E+000	0.00E+000	0.00E+000	0.00E+000	0.00E+000	0.00E+000
Sb129	1.36E-052	0.00E+000	0.00E+000	0.00E+000	0.00E+000	0.00E+000	0.00E+000	0.00E+000
Te127m	3.13E-004	0.00E+000	0.00E+000	0.00E+000	0.00E+000	0.00E+000	0.00E+000	0.00E+000
Te127	1.41E-006	0.00E+000	0.00E+000	0.00E+000	0.00E+000	0.00E+000	0.00E+000	0.00E+000
Te129m	6.17E-004	0.00E+000	0.00E+000	0.00E+000	0.00E+000	0.00E+000	0.00E+000	0.00E+000
Te129	5.34E-053	0.00E+000	0.00E+000	0.00E+000	0.00E+000	0.00E+000	0.00E+000	0.00E+000
Te131m	2.04E-010	0.00E+000	0.00E+000	0.00E+000	0.00E+000	0.00E+000	0.00E+000	0.00E+000
Te132	4.88E-005	0.00E+000	0.00E+000	0.00E+000	0.00E+000	0.00E+000	0.00E+000	0.00E+000
Ba137m	2.68E-009	0.00E+000	0.00E+000	0.00E+000	0.00E+000	0.00E+000	0.00E+000	0.00E+000
Ba139	5.26E-159	0.00E+000	0.00E+000	0.00E+000	0.00E+000	0.00E+000	0.00E+000	0.00E+000
Ba140	2.97E-003	0.00E+000	0.00E+000	0.00E+000	0.00E+000	0.00E+000	0.00E+000	0.00E+000
Mo99	1.19E-006	0.00E+000	0.00E+000	0.00E+000	0.00E+000	0.00E+000	0.00E+000	0.00E+000
Tc99m	1.18E-007	0.00E+000	0.00E+000	0.00E+000	0.00E+000	0.00E+000	0.00E+000	0.00E+000
Ru103	1.15E-003	0.00E+000	0.00E+000	0.00E+000	0.00E+000	0.00E+000	0.00E+000	0.00E+000
Ru105	4.49E-051	0.00E+000	0.00E+000	0.00E+000	0.00E+000	0.00E+000	0.00E+000	0.00E+000
Ru106	7.97E-004	0.00E+000	0.00E+000	0.00E+000	0.00E+000	0.00E+000	0.00E+000	0.00E+000
Rh105	2.20E-009	0.00E+000	0.00E+000	0.00E+000	0.00E+000	0.00E+000	0.00E+000	0.00E+000
Y90	2.97E-007	0.00E+000	0.00E+000	0.00E+000	0.00E+000	0.00E+000	0.00E+000	0.00E+000
Y91	5.32E-003	0.00E+000	0.00E+000	0.00E+000	0.00E+000	0.00E+000	0.00E+000	0.00E+000
Y92	1.96E-062	0.00E+000	0.00E+000	0.00E+000	0.00E+000	0.00E+000	0.00E+000	0.00E+000
Y93	3.62E-026	0.00E+000	0.00E+000	0.00E+000	0.00E+000	0.00E+000	0.00E+000	0.00E+000
Zr95	9.90E-005	0.00E+000	0.00E+000	0.00E+000	0.00E+000	0.00E+000	0.00E+000	0.00E+000
Zr97	2.66E-017	0.00E+000	0.00E+000	0.00E+000	0.00E+000	0.00E+000	0.00E+000	0.00E+000
Nb95	1.05E-004	0.00E+000	0.00E+000	0.00E+000	0.00E+000	0.00E+000	0.00E+000	0.00E+000

La140	4.50E-004	0.00E+000	0.00E+000	0.00E+000	0.00E+000	0.00E+000	0.00E+000	0.00E+000
La141	3.46E-060	0.00E+000	0.00E+000	0.00E+000	0.00E+000	0.00E+000	0.00E+000	0.00E+000
La142	1.97E-146	0.00E+000	0.00E+000	0.00E+000	0.00E+000	0.00E+000	0.00E+000	0.00E+000
Pr143	1.04E-004	0.00E+000	0.00E+000	0.00E+000	0.00E+000	0.00E+000	0.00E+000	0.00E+000
Nd147	8.75E-006	0.00E+000	0.00E+000	0.00E+000	0.00E+000	0.00E+000	0.00E+000	0.00E+000
Am241	2.47E-008	0.00E+000	0.00E+000	0.00E+000	0.00E+000	0.00E+000	0.00E+000	0.00E+000
Cm242	4.93E-006	0.00E+000	0.00E+000	0.00E+000	0.00E+000	0.00E+000	0.00E+000	0.00E+000
Cm244	4.53E-007	0.00E+000	0.00E+000	0.00E+000	0.00E+000	0.00E+000	0.00E+000	0.00E+000
Ce141	2.42E-004	0.00E+000	0.00E+000	0.00E+000	0.00E+000	0.00E+000	0.00E+000	0.00E+000
Ce143	5.34E-011	0.00E+000	0.00E+000	0.00E+000	0.00E+000	0.00E+000	0.00E+000	0.00E+000
Ce144	2.47E-004	0.00E+000	0.00E+000	0.00E+000	0.00E+000	0.00E+000	0.00E+000	0.00E+000
Np239	7.69E-007	0.00E+000	0.00E+000	0.00E+000	0.00E+000	0.00E+000	0.00E+000	0.00E+000
Pu238	7.81E-007	0.00E+000	0.00E+000	0.00E+000	0.00E+000	0.00E+000	0.00E+000	0.00E+000
Pu239	1.55E-007	0.00E+000	0.00E+000	0.00E+000	0.00E+000	0.00E+000	0.00E+000	0.00E+000
Pu240	2.54E-007	0.00E+000	0.00E+000	0.00E+000	0.00E+000	0.00E+000	0.00E+000	0.00E+000
Pu241	7.21E-005	0.00E+000	0.00E+000	0.00E+000	0.00E+000	0.00E+000	0.00E+000	0.00E+000
Sr89	4.41E-003	0.00E+000	0.00E+000	0.00E+000	0.00E+000	0.00E+000	0.00E+000	0.00E+000
Sr90	1.10E-003	0.00E+000	0.00E+000	0.00E+000	0.00E+000	0.00E+000	0.00E+000	0.00E+000
Sr91	2.02E-025	0.00E+000	0.00E+000	0.00E+000	0.00E+000	0.00E+000	0.00E+000	0.00E+000
Sr92	8.59E-085	0.00E+000	0.00E+000	0.00E+000	0.00E+000	0.00E+000	0.00E+000	0.00E+000

SP

	thyroid	wbody	skin	CEDE
Total dose:	0.00E+000	0.00E+000	0.00E+000	0.00E+000
Noble gas	0.00E+000	0.00E+000	0.00E+000	0.00E+000
Org iodine	0.00E+000	0.00E+000	0.00E+000	0.00E+000
Elem iodine	0.00E+000	0.00E+000	0.00E+000	0.00E+000
Part iodine	0.00E+000	0.00E+000	0.00E+000	0.00E+000
Cesium	0.00E+000	0.00E+000	0.00E+000	0.00E+000
Tellurium	0.00E+000	0.00E+000	0.00E+000	0.00E+000
Barium	0.00E+000	0.00E+000	0.00E+000	0.00E+000
Noble metal	0.00E+000	0.00E+000	0.00E+000	0.00E+000
Lanthanides	0.00E+000	0.00E+000	0.00E+000	0.00E+000
Cerium	0.00E+000	0.00E+000	0.00E+000	0.00E+000
Strontinum	0.00E+000	0.00E+000	0.00E+000	0.00E+000

	air_space	water_pool	surface	recirc	thyroid	wbody	skin	CEDE
Kr83m	0.00E+000	0.00E+000	0.00E+000	0.00E+000	0.00E+000	0.00E+000	0.00E+000	0.00E+000
Kr85m	0.00E+000	0.00E+000	0.00E+000	0.00E+000	0.00E+000	0.00E+000	0.00E+000	0.00E+000
Kr85	0.00E+000	0.00E+000	0.00E+000	0.00E+000	0.00E+000	0.00E+000	0.00E+000	0.00E+000
Kr87	0.00E+000	0.00E+000	0.00E+000	0.00E+000	0.00E+000	0.00E+000	0.00E+000	0.00E+000
Kr88	0.00E+000	0.00E+000	0.00E+000	0.00E+000	0.00E+000	0.00E+000	0.00E+000	0.00E+000
Kr89	0.00E+000	0.00E+000	0.00E+000	0.00E+000	0.00E+000	0.00E+000	0.00E+000	0.00E+000
Xe131m	0.00E+000	0.00E+000	0.00E+000	0.00E+000	0.00E+000	0.00E+000	0.00E+000	0.00E+000
Xe133m	0.00E+000	0.00E+000	0.00E+000	0.00E+000	0.00E+000	0.00E+000	0.00E+000	0.00E+000

Xe133	2.29E+006	0.00E+000	0.00E+000	0.00E+000	0.00E+000	0.00E+000	0.00E+000	0.00E+000
Xe135m	0.00E+000	0.00E+000	0.00E+000	0.00E+000	0.00E+000	0.00E+000	0.00E+000	0.00E+000
Xe135	1.00E-015	0.00E+000	0.00E+000	0.00E+000	0.00E+000	0.00E+000	0.00E+000	0.00E+000
Xe137	0.00E+000	0.00E+000	0.00E+000	0.00E+000	0.00E+000	0.00E+000	0.00E+000	0.00E+000
Xe138	0.00E+000	0.00E+000	0.00E+000	0.00E+000	0.00E+000	0.00E+000	0.00E+000	0.00E+000
I131Org	6.22E+003	0.00E+000	0.00E+000	0.00E+000	0.00E+000	0.00E+000	0.00E+000	0.00E+000
I132Org	9.34E-089	0.00E+000	0.00E+000	0.00E+000	0.00E+000	0.00E+000	0.00E+000	0.00E+000
I133Org	6.70E-006	0.00E+000	0.00E+000	0.00E+000	0.00E+000	0.00E+000	0.00E+000	0.00E+000
I134Org	1.66E-246	0.00E+000	0.00E+000	0.00E+000	0.00E+000	0.00E+000	0.00E+000	0.00E+000
I135Org	9.47E-028	0.00E+000	0.00E+000	0.00E+000	0.00E+000	0.00E+000	0.00E+000	0.00E+000
I131Elem	2.01E+005	0.00E+000	0.00E+000	0.00E+000	0.00E+000	0.00E+000	0.00E+000	0.00E+000
I132Elem	3.02E-087	0.00E+000	0.00E+000	0.00E+000	0.00E+000	0.00E+000	0.00E+000	0.00E+000
I133Elem	2.17E-004	0.00E+000	0.00E+000	0.00E+000	0.00E+000	0.00E+000	0.00E+000	0.00E+000
I134Elem	5.37E-245	0.00E+000	0.00E+000	0.00E+000	0.00E+000	0.00E+000	0.00E+000	0.00E+000
I135Elem	3.06E-026	0.00E+000	0.00E+000	0.00E+000	0.00E+000	0.00E+000	0.00E+000	0.00E+000
I131Part	3.94E+006	0.00E+000	0.00E+000	0.00E+000	0.00E+000	0.00E+000	0.00E+000	0.00E+000
I132Part	5.91E-086	0.00E+000	0.00E+000	0.00E+000	0.00E+000	0.00E+000	0.00E+000	0.00E+000
I133Part	4.24E-003	0.00E+000	0.00E+000	0.00E+000	0.00E+000	0.00E+000	0.00E+000	0.00E+000
I134Part	1.05E-243	0.00E+000	0.00E+000	0.00E+000	0.00E+000	0.00E+000	0.00E+000	0.00E+000
I135Part	6.00E-025	0.00E+000	0.00E+000	0.00E+000	0.00E+000	0.00E+000	0.00E+000	0.00E+000
Rb86	0.00E+000	0.00E+000	0.00E+000	0.00E+000	0.00E+000	0.00E+000	0.00E+000	0.00E+000
Cs134	0.00E+000	0.00E+000	0.00E+000	0.00E+000	0.00E+000	0.00E+000	0.00E+000	0.00E+000
Cs136	0.00E+000	0.00E+000	0.00E+000	0.00E+000	0.00E+000	0.00E+000	0.00E+000	0.00E+000
Cs137	0.00E+000	0.00E+000	0.00E+000	0.00E+000	0.00E+000	0.00E+000	0.00E+000	0.00E+000
Sb127	0.00E+000	0.00E+000	0.00E+000	0.00E+000	0.00E+000	0.00E+000	0.00E+000	0.00E+000
Sb129	0.00E+000	0.00E+000	0.00E+000	0.00E+000	0.00E+000	0.00E+000	0.00E+000	0.00E+000
Te127m	0.00E+000	0.00E+000	0.00E+000	0.00E+000	0.00E+000	0.00E+000	0.00E+000	0.00E+000
Te127	0.00E+000	0.00E+000	0.00E+000	0.00E+000	0.00E+000	0.00E+000	0.00E+000	0.00E+000
Te129m	0.00E+000	0.00E+000	0.00E+000	0.00E+000	0.00E+000	0.00E+000	0.00E+000	0.00E+000
Te129	0.00E+000	0.00E+000	0.00E+000	0.00E+000	0.00E+000	0.00E+000	0.00E+000	0.00E+000
Te131m	0.00E+000	0.00E+000	0.00E+000	0.00E+000	0.00E+000	0.00E+000	0.00E+000	0.00E+000
Te132	0.00E+000	0.00E+000	0.00E+000	0.00E+000	0.00E+000	0.00E+000	0.00E+000	0.00E+000
Ba137m	0.00E+000	0.00E+000	0.00E+000	0.00E+000	0.00E+000	0.00E+000	0.00E+000	0.00E+000
Ba139	0.00E+000	0.00E+000	0.00E+000	0.00E+000	0.00E+000	0.00E+000	0.00E+000	0.00E+000
Ba140	0.00E+000	0.00E+000	0.00E+000	0.00E+000	0.00E+000	0.00E+000	0.00E+000	0.00E+000
Mo99	0.00E+000	0.00E+000	0.00E+000	0.00E+000	0.00E+000	0.00E+000	0.00E+000	0.00E+000
Tc99m	0.00E+000	0.00E+000	0.00E+000	0.00E+000	0.00E+000	0.00E+000	0.00E+000	0.00E+000
Ru103	0.00E+000	0.00E+000	0.00E+000	0.00E+000	0.00E+000	0.00E+000	0.00E+000	0.00E+000
Ru105	0.00E+000	0.00E+000	0.00E+000	0.00E+000	0.00E+000	0.00E+000	0.00E+000	0.00E+000
Ru106	0.00E+000	0.00E+000	0.00E+000	0.00E+000	0.00E+000	0.00E+000	0.00E+000	0.00E+000
Rh105	0.00E+000	0.00E+000	0.00E+000	0.00E+000	0.00E+000	0.00E+000	0.00E+000	0.00E+000
Y90	0.00E+000	0.00E+000	0.00E+000	0.00E+000	0.00E+000	0.00E+000	0.00E+000	0.00E+000
Y91	0.00E+000	0.00E+000	0.00E+000	0.00E+000	0.00E+000	0.00E+000	0.00E+000	0.00E+000
Y92	0.00E+000	0.00E+000	0.00E+000	0.00E+000	0.00E+000	0.00E+000	0.00E+000	0.00E+000
Y93	0.00E+000	0.00E+000	0.00E+000	0.00E+000	0.00E+000	0.00E+000	0.00E+000	0.00E+000
Zr95	0.00E+000	0.00E+000	0.00E+000	0.00E+000	0.00E+000	0.00E+000	0.00E+000	0.00E+000

Zr97	0.00E+000	0.00E+000	0.00E+000	0.00E+000	0.00E+000	0.00E+000	0.00E+000	0.00E+000
Nb95	0.00E+000	0.00E+000	0.00E+000	0.00E+000	0.00E+000	0.00E+000	0.00E+000	0.00E+000
La140	0.00E+000	0.00E+000	0.00E+000	0.00E+000	0.00E+000	0.00E+000	0.00E+000	0.00E+000
La141	0.00E+000	0.00E+000	0.00E+000	0.00E+000	0.00E+000	0.00E+000	0.00E+000	0.00E+000
La142	0.00E+000	0.00E+000	0.00E+000	0.00E+000	0.00E+000	0.00E+000	0.00E+000	0.00E+000
Pr143	0.00E+000	0.00E+000	0.00E+000	0.00E+000	0.00E+000	0.00E+000	0.00E+000	0.00E+000
Nd147	0.00E+000	0.00E+000	0.00E+000	0.00E+000	0.00E+000	0.00E+000	0.00E+000	0.00E+000
Am241	0.00E+000	0.00E+000	0.00E+000	0.00E+000	0.00E+000	0.00E+000	0.00E+000	0.00E+000
Cm242	0.00E+000	0.00E+000	0.00E+000	0.00E+000	0.00E+000	0.00E+000	0.00E+000	0.00E+000
Cm244	0.00E+000	0.00E+000	0.00E+000	0.00E+000	0.00E+000	0.00E+000	0.00E+000	0.00E+000
Ce141	0.00E+000	0.00E+000	0.00E+000	0.00E+000	0.00E+000	0.00E+000	0.00E+000	0.00E+000
Ce143	0.00E+000	0.00E+000	0.00E+000	0.00E+000	0.00E+000	0.00E+000	0.00E+000	0.00E+000
Ce144	0.00E+000	0.00E+000	0.00E+000	0.00E+000	0.00E+000	0.00E+000	0.00E+000	0.00E+000
Np239	0.00E+000	0.00E+000	0.00E+000	0.00E+000	0.00E+000	0.00E+000	0.00E+000	0.00E+000
Pu238	0.00E+000	0.00E+000	0.00E+000	0.00E+000	0.00E+000	0.00E+000	0.00E+000	0.00E+000
Pu239	0.00E+000	0.00E+000	0.00E+000	0.00E+000	0.00E+000	0.00E+000	0.00E+000	0.00E+000
Pu240	0.00E+000	0.00E+000	0.00E+000	0.00E+000	0.00E+000	0.00E+000	0.00E+000	0.00E+000
Pu241	0.00E+000	0.00E+000	0.00E+000	0.00E+000	0.00E+000	0.00E+000	0.00E+000	0.00E+000
Sr89	0.00E+000	0.00E+000	0.00E+000	0.00E+000	0.00E+000	0.00E+000	0.00E+000	0.00E+000
Sr90	0.00E+000	0.00E+000	0.00E+000	0.00E+000	0.00E+000	0.00E+000	0.00E+000	0.00E+000
Sr91	0.00E+000	0.00E+000	0.00E+000	0.00E+000	0.00E+000	0.00E+000	0.00E+000	0.00E+000
Sr92	0.00E+000	0.00E+000	0.00E+000	0.00E+000	0.00E+000	0.00E+000	0.00E+000	0.00E+000

Control_Room

	thyroid	wbody	skin	CEDE
Total dose:	3.91E+000	2.62E-001	5.36E+000	1.42E-001
Noble gas	0.00E+000	2.61E-001	5.36E+000	0.00E+000
Org iodine	9.13E-001	2.73E-005	2.86E-004	2.81E-002
Elem iodine	1.96E+000	2.63E-004	1.67E-003	6.07E-002
Part iodine	9.95E-001	8.47E-005	7.34E-004	3.10E-002
Cesium	9.59E-003	0.00E+000	0.00E+000	1.07E-002
Tellurium	3.32E-002	0.00E+000	0.00E+000	1.60E-003
Barium	6.16E-005	0.00E+000	0.00E+000	2.44E-004
Noble metal	3.29E-005	0.00E+000	0.00E+000	1.87E-003
Lanthanides	4.10E-006	0.00E+000	0.00E+000	1.40E-003
Cerium	2.14E-006	0.00E+000	0.00E+000	5.20E-003
Strontinum	9.63E-005	0.00E+000	0.00E+000	1.37E-003

	air_space	water_pool	surface	recirc	thyroid	wbody	skin	CEDE
Kr83m	1.13E-118	0.00E+000	0.00E+000	0.00E+000	0.00E+000	1.01E-007	0.00E+000	0.00E+000
Kr85m	1.06E-050	0.00E+000	0.00E+000	0.00E+000	0.00E+000	5.54E-003	1.67E-001	0.00E+000
Kr85	1.52E-002	0.00E+000	0.00E+000	0.00E+000	0.00E+000	1.01E-004	1.95E-001	0.00E+000
Kr87	3.93E-172	0.00E+000	0.00E+000	0.00E+000	0.00E+000	6.46E-003	2.78E-001	0.00E+000
Kr88	2.54E-078	0.00E+000	0.00E+000	0.00E+000	0.00E+000	9.33E-002	3.73E-001	0.00E+000
Kr89	6.62E-322	0.00E+000	0.00E+000	0.00E+000	0.00E+000	2.44E-006	5.23E-005	0.00E+000

Xe131m	1.84E-003	0.00E+000	0.00E+000	0.00E+000	0.00E+000	1.34E-004	3.26E-002	0.00E+000
Xe133m	7.29E-006	0.00E+000	0.00E+000	0.00E+000	0.00E+000	1.42E-003	1.42E-001	0.00E+000
Xe133	5.86E-002	0.00E+000	0.00E+000	0.00E+000	0.00E+000	9.40E-002	2.79E+000	0.00E+000
Xe135m	3.00E-321	0.00E+000	0.00E+000	0.00E+000	0.00E+000	4.26E-005	2.03E-004	0.00E+000
Xe135	9.88E-024	0.00E+000	0.00E+000	0.00E+000	0.00E+000	5.97E-002	1.38E+000	0.00E+000
Xe137	7.71E-322	0.00E+000	0.00E+000	0.00E+000	0.00E+000	8.89E-007	2.68E-004	0.00E+000
Xe138	3.61E-321	0.00E+000	0.00E+000	0.00E+000	0.00E+000	4.62E-004	6.49E-003	0.00E+000
I131Org	1.11E-006	0.00E+000	0.00E+000	0.00E+000	8.03E-001	6.41E-006	6.37E-005	2.45E-002
I132Org	1.67E-098	0.00E+000	0.00E+000	0.00E+000	3.44E-004	2.93E-006	1.68E-005	2.04E-005
I133Org	1.19E-015	0.00E+000	0.00E+000	0.00E+000	1.01E-001	7.92E-006	1.45E-004	3.29E-003
I134Org	2.96E-256	0.00E+000	0.00E+000	0.00E+000	1.54E-005	9.16E-007	5.78E-006	1.90E-006
I135Org	1.69E-037	0.00E+000	0.00E+000	0.00E+000	7.46E-003	9.15E-006	5.45E-005	2.93E-004
I131Elem	1.06E-006	0.00E+000	0.00E+000	0.00E+000	1.82E+000	1.46E-005	1.45E-004	5.55E-002
I132Elem	4.62E-007	0.00E+000	0.00E+000	0.00E+000	2.64E-002	2.25E-004	1.29E-003	1.57E-003
I133Elem	1.15E-015	0.00E+000	0.00E+000	0.00E+000	9.94E-002	7.77E-006	1.42E-004	3.23E-003
I134Elem	2.84E-256	0.00E+000	0.00E+000	0.00E+000	6.15E-005	3.66E-006	2.31E-005	7.58E-006
I135Elem	1.62E-037	0.00E+000	0.00E+000	0.00E+000	9.63E-003	1.18E-005	7.03E-005	3.78E-004
I131Part	5.97E-010	0.00E+000	0.00E+000	0.00E+000	7.54E-001	6.02E-006	5.98E-005	2.29E-002
I132Part	9.00E-102	0.00E+000	0.00E+000	0.00E+000	2.22E-003	1.89E-005	1.08E-004	1.32E-004
I133Part	6.44E-019	0.00E+000	0.00E+000	0.00E+000	2.13E-001	1.66E-005	3.05E-004	6.92E-003
I134Part	1.61E-259	0.00E+000	0.00E+000	0.00E+000	1.95E-004	1.16E-005	7.33E-005	2.41E-005
I135Part	9.09E-041	0.00E+000	0.00E+000	0.00E+000	2.57E-002	3.16E-005	1.88E-004	1.01E-003
Rb86	3.25E-012	0.00E+000	0.00E+000	0.00E+000	5.05E-006	0.00E+000	0.00E+000	6.80E-006
Cs134	1.35E-009	0.00E+000	0.00E+000	0.00E+000	5.96E-003	0.00E+000	0.00E+000	6.71E-003
Cs136	6.22E-011	0.00E+000	0.00E+000	0.00E+000	2.04E-004	0.00E+000	0.00E+000	2.33E-004
Cs137	1.11E-009	0.00E+000	0.00E+000	0.00E+000	3.43E-003	0.00E+000	0.00E+000	3.73E-003
Sb127	8.48E-013	0.00E+000	0.00E+000	0.00E+000	2.57E-006	0.00E+000	0.00E+000	6.82E-005
Sb129	9.13E-060	0.00E+000	0.00E+000	0.00E+000	5.85E-007	0.00E+000	0.00E+000	1.05E-005
Te127m	2.09E-011	0.00E+000	0.00E+000	0.00E+000	5.92E-007	0.00E+000	0.00E+000	3.56E-005
Te127	9.47E-014	0.00E+000	0.00E+000	0.00E+000	5.72E-008	0.00E+000	0.00E+000	2.67E-006
Te129m	4.13E-011	0.00E+000	0.00E+000	0.00E+000	2.84E-006	0.00E+000	0.00E+000	1.18E-004
Te129	3.58E-060	0.00E+000	0.00E+000	0.00E+000	1.46E-008	0.00E+000	0.00E+000	5.98E-007
Te131m	1.36E-017	0.00E+000	0.00E+000	0.00E+000	1.77E-003	0.00E+000	0.00E+000	8.46E-005
Te132	3.27E-012	0.00E+000	0.00E+000	0.00E+000	3.14E-002	0.00E+000	0.00E+000	1.28E-003
Ba137m	1.79E-016	0.00E+000	0.00E+000	0.00E+000	0.00E+000	0.00E+000	0.00E+000	0.00E+000
Ba139	3.53E-166	0.00E+000	0.00E+000	0.00E+000	9.75E-008	0.00E+000	0.00E+000	1.88E-006
Ba140	1.99E-010	0.00E+000	0.00E+000	0.00E+000	6.15E-005	0.00E+000	0.00E+000	2.42E-004
Mo99	7.98E-014	0.00E+000	0.00E+000	0.00E+000	4.69E-007	0.00E+000	0.00E+000	3.30E-005
Tc99m	7.92E-015	0.00E+000	0.00E+000	0.00E+000	8.84E-007	0.00E+000	0.00E+000	1.55E-007
Ru103	7.70E-011	0.00E+000	0.00E+000	0.00E+000	8.02E-006	0.00E+000	0.00E+000	7.55E-005
Ru105	3.01E-058	0.00E+000	0.00E+000	0.00E+000	4.75E-008	0.00E+000	0.00E+000	1.41E-006
Ru106	5.34E-011	0.00E+000	0.00E+000	0.00E+000	2.34E-005	0.00E+000	0.00E+000	1.75E-003
Rh105	1.47E-016	0.00E+000	0.00E+000	0.00E+000	7.64E-008	0.00E+000	0.00E+000	6.84E-006
Y90	1.99E-014	0.00E+000	0.00E+000	0.00E+000	5.17E-011	0.00E+000	0.00E+000	2.28E-007
Y91	3.56E-010	0.00E+000	0.00E+000	0.00E+000	2.58E-007	0.00E+000	0.00E+000	4.01E-004
Y92	1.31E-069	0.00E+000	0.00E+000	0.00E+000	3.67E-008	0.00E+000	0.00E+000	7.37E-006

Y93	2.43E-033	0.00E+000	0.00E+000	0.00E+000	1.21E-009	0.00E+000	0.00E+000	7.61E-007
Zr95	6.63E-012	0.00E+000	0.00E+000	0.00E+000	2.56E-006	0.00E+000	0.00E+000	1.39E-005
Zr97	1.78E-024	0.00E+000	0.00E+000	0.00E+000	4.20E-008	0.00E+000	0.00E+000	2.13E-006
Nb95	7.00E-012	0.00E+000	0.00E+000	0.00E+000	7.91E-007	0.00E+000	0.00E+000	3.47E-006
La140	3.01E-011	0.00E+000	0.00E+000	0.00E+000	2.98E-007	0.00E+000	0.00E+000	5.67E-006
La141	2.32E-067	0.00E+000	0.00E+000	0.00E+000	2.49E-009	0.00E+000	0.00E+000	1.54E-007
La142	1.32E-153	0.00E+000	0.00E+000	0.00E+000	1.96E-009	0.00E+000	0.00E+000	2.19E-008
Pr143	6.94E-012	0.00E+000	0.00E+000	0.00E+000	3.95E-015	0.00E+000	0.00E+000	5.17E-006
Nd147	5.86E-013	0.00E+000	0.00E+000	0.00E+000	1.59E-008	0.00E+000	0.00E+000	1.62E-006
Am241	1.65E-015	0.00E+000	0.00E+000	0.00E+000	6.37E-010	0.00E+000	0.00E+000	4.73E-005
Cm242	3.30E-013	0.00E+000	0.00E+000	0.00E+000	8.49E-008	0.00E+000	0.00E+000	4.14E-004
Cm244	3.03E-014	0.00E+000	0.00E+000	0.00E+000	7.39E-009	0.00E+000	0.00E+000	4.94E-004
Ce141	1.62E-011	0.00E+000	0.00E+000	0.00E+000	1.68E-007	0.00E+000	0.00E+000	1.59E-005
Ce143	3.58E-018	0.00E+000	0.00E+000	0.00E+000	2.93E-008	0.00E+000	0.00E+000	4.31E-006
Ce144	1.66E-011	0.00E+000	0.00E+000	0.00E+000	1.25E-006	0.00E+000	0.00E+000	4.32E-004
Np239	5.15E-014	0.00E+000	0.00E+000	0.00E+000	6.58E-007	0.00E+000	0.00E+000	5.85E-005
Pu238	5.23E-014	0.00E+000	0.00E+000	0.00E+000	1.21E-008	0.00E+000	0.00E+000	1.33E-003
Pu239	1.04E-014	0.00E+000	0.00E+000	0.00E+000	2.25E-009	0.00E+000	0.00E+000	2.89E-004
Pu240	1.70E-014	0.00E+000	0.00E+000	0.00E+000	3.71E-009	0.00E+000	0.00E+000	4.76E-004
Pu241	4.83E-012	0.00E+000	0.00E+000	0.00E+000	1.45E-008	0.00E+000	0.00E+000	2.60E-003
Sr89	2.95E-010	0.00E+000	0.00E+000	0.00E+000	4.45E-005	0.00E+000	0.00E+000	1.88E-004
Sr90	7.36E-011	0.00E+000	0.00E+000	0.00E+000	4.68E-005	0.00E+000	0.00E+000	1.15E-003
Sr91	1.35E-032	0.00E+000	0.00E+000	0.00E+000	3.91E-006	0.00E+000	0.00E+000	2.41E-005
Sr92	5.75E-092	0.00E+000	0.00E+000	0.00E+000	1.16E-006	0.00E+000	0.00E+000	8.99E-006

environment

	thyroid	wbody	skin	CEDE
EAB dose:	4.58E+001	1.46E+001	2.07E+001	2.24E+000
LPZ dose:	2.04E+001	2.11E+000	2.40E+000	8.62E-001

	thyrd_eab	wbody_eab	skin_eab	CEDE_eab	thyrd_lpz	wbody_lpz	skin_lpz	CEDE_lpz
Noble gas	0.00E+000	1.45E+001	2.06E+001	0.00E+000	0.00E+000	2.08E+000	2.38E+000	0.00E+000
Org iodine	2.65E+000	1.34E-002	7.64E-003	8.27E-002	2.73E+000	2.23E-003	1.23E-003	8.40E-002
Elem iodine	4.35E+000	5.23E-002	2.44E-002	1.36E-001	6.60E+000	6.54E-003	3.09E-003	2.03E-001
Part iodine	3.70E+001	9.13E-002	3.88E-002	1.16E+000	1.05E+001	2.55E-002	1.08E-002	3.30E-001
Cesium	3.37E-001	0.00E+000	0.00E+000	3.75E-001	9.60E-002	0.00E+000	0.00E+000	1.07E-001
Tellurium	1.44E+000	0.00E+000	0.00E+000	6.93E-002	4.11E-001	0.00E+000	0.00E+000	1.98E-002
Barium	2.61E-003	0.00E+000	0.00E+000	1.05E-002	7.47E-004	0.00E+000	0.00E+000	2.99E-003
Noble metal	1.40E-003	0.00E+000	0.00E+000	7.89E-002	4.00E-004	0.00E+000	0.00E+000	2.26E-002
Lanthanides	1.60E-004	0.00E+000	0.00E+000	4.58E-002	4.59E-005	0.00E+000	0.00E+000	1.33E-002
Cerium	9.06E-005	0.00E+000	0.00E+000	2.19E-001	2.59E-005	0.00E+000	0.00E+000	6.28E-002
Strontinum	4.13E-003	0.00E+000	0.00E+000	5.81E-002	1.18E-003	0.00E+000	0.00E+000	1.66E-002

	air_space	thyrd_eab	wbody_eab	skin_eab	CEDE_eab	thyrd_lpz	wbody_lpz	skin_lpz	CEDE_lpz
Kr83m	3.81E+003	0.00E+000	2.87E-006	0.00E+000	0.00E+000	0.00E+000	7.79E-007	0.00E+000	0.00E+000

Kr85m	2.85E+004	0.00E+000	1.57E-001	2.56E-001	0.00E+000	0.00E+000	3.88E-002	6.32E-002	0.00E+000
Kr85	1.50E+005	0.00E+000	1.30E-002	1.35E+000	0.00E+000	0.00E+000	7.97E-004	8.30E-002	0.00E+000
Kr87	7.52E+003	0.00E+000	1.97E-001	4.57E-001	0.00E+000	0.00E+000	5.45E-002	1.27E-001	0.00E+000
Kr88	3.88E+004	0.00E+000	2.58E+000	5.57E-001	0.00E+000	0.00E+000	6.74E-001	1.45E-001	0.00E+000
Kr89	7.37E+000	0.00E+000	4.02E-004	4.64E-004	0.00E+000	0.00E+000	1.12E-004	1.30E-004	0.00E+000
Xe131m	5.05E+004	0.00E+000	1.38E-002	1.82E-001	0.00E+000	0.00E+000	1.06E-003	1.39E-002	0.00E+000
Xe133m	8.08E+004	0.00E+000	8.06E-002	4.36E-001	0.00E+000	0.00E+000	1.09E-002	5.91E-002	0.00E+000
Xe133	7.87E+006	0.00E+000	8.86E+000	1.42E+001	0.00E+000	0.00E+000	7.87E-001	1.26E+000	0.00E+000
Xe135m	1.85E+002	0.00E+000	2.58E-003	6.66E-004	0.00E+000	0.00E+000	7.23E-004	1.86E-004	0.00E+000
Xe135	2.95E+005	0.00E+000	2.56E+000	3.19E+000	0.00E+000	0.00E+000	5.01E-001	6.24E-001	0.00E+000
Xe137	2.35E+001	0.00E+000	1.20E-004	1.94E-003	0.00E+000	0.00E+000	3.35E-005	5.44E-004	0.00E+000
Xe138	7.56E+002	0.00E+000	2.68E-002	2.04E-002	0.00E+000	0.00E+000	7.52E-003	5.70E-003	0.00E+000
I131Org	5.96E+002	2.00E+000	6.00E-003	3.22E-003	6.10E-002	2.40E+000	5.26E-004	2.82E-004	7.31E-002
I132Org	1.58E+001	5.63E-003	1.00E-003	3.11E-004	3.33E-004	1.66E-003	2.73E-004	8.44E-005	9.80E-005
I133Org	1.87E+002	5.72E-001	3.06E-003	3.03E-003	1.86E-002	3.00E-001	5.99E-004	5.91E-004	9.77E-003
I134Org	6.34E+000	4.22E-004	4.66E-004	1.59E-004	5.20E-005	1.18E-004	1.31E-004	4.45E-005	1.46E-005
I135Org	6.45E+001	6.93E-002	2.88E-003	9.27E-004	2.72E-003	2.54E-002	7.00E-004	2.25E-004	9.95E-004
I131Elem	1.72E+003	3.29E+000	1.73E-002	9.29E-003	1.00E-001	6.00E+000	1.33E-003	7.12E-004	1.83E-001
I132Elem	3.50E+002	1.50E-002	2.24E-002	6.93E-003	8.86E-004	1.15E-002	2.53E-003	7.83E-004	6.79E-004
I133Elem	3.78E+002	9.24E-001	6.19E-003	6.11E-003	3.00E-002	5.41E-001	1.08E-003	1.07E-003	1.76E-002
I134Elem	2.11E+001	1.41E-003	1.56E-003	5.31E-004	1.74E-004	3.96E-004	4.37E-004	1.49E-004	4.88E-005
I135Elem	1.09E+002	1.19E-001	4.89E-003	1.57E-003	4.69E-003	4.31E-002	1.17E-003	3.76E-004	1.69E-003
I131Part	4.20E+002	2.73E+001	4.22E-003	2.27E-003	8.30E-001	7.76E+000	1.17E-003	6.25E-004	2.36E-001
I132Part	3.63E+002	1.47E-001	2.32E-002	7.18E-003	8.68E-003	4.11E-002	6.48E-003	2.01E-003	2.43E-003
I133Part	7.66E+002	8.38E+000	1.25E-002	1.24E-002	2.72E-001	2.38E+000	3.48E-003	3.44E-003	7.72E-002
I134Part	3.20E+002	2.14E-002	2.36E-002	8.04E-003	2.64E-003	6.00E-003	6.61E-003	2.25E-003	7.40E-004
I135Part	6.22E+002	1.20E+000	2.78E-002	8.93E-003	4.72E-002	3.39E-001	7.75E-003	2.49E-003	1.33E-002
Rb86	5.96E-001	1.76E-004	0.00E+000	0.00E+000	2.38E-004	5.02E-005	0.00E+000	0.00E+000	6.76E-005
Cs134	8.42E+001	2.11E-001	0.00E+000	0.00E+000	2.37E-001	6.00E-002	0.00E+000	0.00E+000	6.76E-002
Cs136	1.85E+001	7.12E-003	0.00E+000	0.00E+000	8.15E-003	2.03E-003	0.00E+000	0.00E+000	2.32E-003
Cs137	6.78E+001	1.19E-001	0.00E+000	0.00E+000	1.30E-001	3.40E-002	0.00E+000	0.00E+000	3.70E-002
Sb127	8.18E+000	1.11E-004	0.00E+000	0.00E+000	2.94E-003	3.17E-005	0.00E+000	0.00E+000	8.39E-004
Sb129	1.67E+001	3.72E-005	0.00E+000	0.00E+000	6.65E-004	1.05E-005	0.00E+000	0.00E+000	1.87E-004
Te127m	1.18E+000	2.50E-005	0.00E+000	0.00E+000	1.50E-003	7.14E-006	0.00E+000	0.00E+000	4.30E-004
Te127	7.02E+000	2.91E-006	0.00E+000	0.00E+000	1.36E-004	8.24E-007	0.00E+000	0.00E+000	3.85E-005
Te129m	3.52E+000	1.20E-004	0.00E+000	0.00E+000	4.98E-003	3.43E-005	0.00E+000	0.00E+000	1.42E-003
Te129	8.97E+000	1.05E-006	0.00E+000	0.00E+000	4.31E-005	2.95E-007	0.00E+000	0.00E+000	1.21E-005
Te131m	9.96E+000	7.99E-002	0.00E+000	0.00E+000	3.83E-003	2.27E-002	0.00E+000	0.00E+000	1.09E-003
Te132	9.81E+001	1.36E+000	0.00E+000	0.00E+000	5.52E-002	3.88E-001	0.00E+000	0.00E+000	1.58E-002
Ba137m	1.27E-005	0.00E+000	0.00E+000	0.00E+000	0.00E+000	0.00E+000	0.00E+000	0.00E+000	0.00E+000
Ba139	1.88E+001	1.05E-005	0.00E+000	0.00E+000	2.02E-004	2.93E-006	0.00E+000	0.00E+000	5.67E-005
Ba140	4.64E+001	2.60E-003	0.00E+000	0.00E+000	1.03E-002	7.44E-004	0.00E+000	0.00E+000	2.94E-003
Mo99	6.08E+000	2.04E-005	0.00E+000	0.00E+000	1.44E-003	5.82E-006	0.00E+000	0.00E+000	4.10E-004
Tc99m	4.29E+000	4.87E-005	0.00E+000	0.00E+000	8.55E-006	1.38E-005	0.00E+000	0.00E+000	2.42E-006
Ru103	6.02E+000	3.38E-004	0.00E+000	0.00E+000	3.19E-003	9.68E-005	0.00E+000	0.00E+000	9.12E-004
Ru105	3.13E+000	2.97E-006	0.00E+000	0.00E+000	8.80E-005	8.36E-007	0.00E+000	0.00E+000	2.48E-005

Ru106	2.62E+000	9.85E-004	0.00E+000	0.00E+000	7.39E-002	2.82E-004	0.00E+000	0.00E+000	2.12E-002
Rh105	4.37E+000	2.72E-006	0.00E+000	0.00E+000	2.44E-004	7.84E-007	0.00E+000	0.00E+000	7.02E-005
Y90	1.97E-002	2.25E-009	0.00E+000	0.00E+000	9.92E-006	6.42E-010	0.00E+000	0.00E+000	2.83E-006
Y91	2.17E+000	2.63E-006	0.00E+000	0.00E+000	4.08E-003	8.80E-007	0.00E+000	0.00E+000	1.37E-003
Y92	2.53E+000	5.46E-007	0.00E+000	0.00E+000	1.10E-004	1.60E-007	0.00E+000	0.00E+000	3.22E-005
Y93	2.98E-001	6.23E-008	0.00E+000	0.00E+000	3.92E-005	1.76E-008	0.00E+000	0.00E+000	1.11E-005
Zr95	4.27E-001	1.08E-004	0.00E+000	0.00E+000	5.88E-004	3.09E-005	0.00E+000	0.00E+000	1.68E-004
Zr97	3.87E-001	2.00E-006	0.00E+000	0.00E+000	1.01E-004	5.68E-007	0.00E+000	0.00E+000	2.88E-005
Nb95	4.27E-001	3.33E-005	0.00E+000	0.00E+000	1.46E-004	9.54E-006	0.00E+000	0.00E+000	4.19E-005
La140	6.02E-001	7.95E-006	0.00E+000	0.00E+000	1.52E-004	2.36E-006	0.00E+000	0.00E+000	4.50E-005
La141	2.92E-001	1.64E-007	0.00E+000	0.00E+000	1.02E-005	4.61E-008	0.00E+000	0.00E+000	2.86E-006
La142	1.74E-001	1.99E-007	0.00E+000	0.00E+000	2.22E-006	5.56E-008	0.00E+000	0.00E+000	6.23E-007
Pr143	4.04E-001	1.43E-013	0.00E+000	0.00E+000	1.87E-004	4.14E-014	0.00E+000	0.00E+000	5.41E-005
Nd147	1.69E-001	6.76E-007	0.00E+000	0.00E+000	6.87E-005	1.93E-007	0.00E+000	0.00E+000	1.96E-005
Am241	7.69E-005	2.69E-008	0.00E+000	0.00E+000	2.00E-003	7.69E-009	0.00E+000	0.00E+000	5.71E-004
Cm242	1.74E-002	3.58E-006	0.00E+000	0.00E+000	1.75E-002	1.02E-006	0.00E+000	0.00E+000	5.00E-003
Cm244	1.41E-003	3.12E-007	0.00E+000	0.00E+000	2.08E-002	8.92E-008	0.00E+000	0.00E+000	5.96E-003
Ce141	1.17E+000	6.43E-006	0.00E+000	0.00E+000	6.10E-004	1.85E-006	0.00E+000	0.00E+000	1.75E-004
Ce143	9.54E-001	1.32E-006	0.00E+000	0.00E+000	1.94E-004	3.76E-007	0.00E+000	0.00E+000	5.53E-005
Ce144	8.26E-001	5.27E-005	0.00E+000	0.00E+000	1.82E-002	1.51E-005	0.00E+000	0.00E+000	5.21E-003
Np239	1.71E+001	2.88E-005	0.00E+000	0.00E+000	2.56E-003	8.21E-006	0.00E+000	0.00E+000	7.31E-004
Pu238	2.43E-003	5.11E-007	0.00E+000	0.00E+000	5.60E-002	1.46E-007	0.00E+000	0.00E+000	1.60E-002
Pu239	4.81E-004	9.47E-008	0.00E+000	0.00E+000	1.22E-002	2.71E-008	0.00E+000	0.00E+000	3.49E-003
Pu240	7.91E-004	1.56E-007	0.00E+000	0.00E+000	2.01E-002	4.47E-008	0.00E+000	0.00E+000	5.74E-003
Pu241	2.25E-001	6.09E-007	0.00E+000	0.00E+000	1.10E-001	1.74E-007	0.00E+000	0.00E+000	3.14E-002
Sr89	2.06E+001	1.88E-003	0.00E+000	0.00E+000	7.93E-003	5.37E-004	0.00E+000	0.00E+000	2.27E-003
Sr90	3.42E+000	1.97E-003	0.00E+000	0.00E+000	4.82E-002	5.63E-004	0.00E+000	0.00E+000	1.38E-002
Sr91	2.20E+001	2.03E-004	0.00E+000	0.00E+000	1.25E-003	5.74E-005	0.00E+000	0.00E+000	3.55E-004
Sr92	1.76E+001	8.92E-005	0.00E+000	0.00E+000	6.92E-004	2.50E-005	0.00E+000	0.00E+000	1.94E-004

STARDOSE 1.0 (c) 1996 Polestar Applied Technology, Inc.
08:49:50 AM October 13, 2001
Total elapsed hours: 00, mins: 04, secs: 36

Excerpts from Results.out File – 30-day time edit - Control Room Unfiltered Inleakage Case:

```
STARDOSE 1.0 (c) 1996 Polestar Applied Technology, Inc.
08:51:27 AM October 13, 2001

edit time 720.000000
DW

             thyroid    wbody      skin       CEDE
Total dose:  0.00E+000  0.00E+000  0.00E+000  0.00E+000
Noble gas    0.00E+000  0.00E+000  0.00E+000  0.00E+000
Org iodine   0.00E+000  0.00E+000  0.00E+000  0.00E+000
Elem iodine  0.00E+000  0.00E+000  0.00E+000  0.00E+000
Part iodine  0.00E+000  0.00E+000  0.00E+000  0.00E+000
Cesium       0.00E+000  0.00E+000  0.00E+000  0.00E+000
Tellurium    0.00E+000  0.00E+000  0.00E+000  0.00E+000
Barium       0.00E+000  0.00E+000  0.00E+000  0.00E+000
Noble metal  0.00E+000  0.00E+000  0.00E+000  0.00E+000
Lanthanides  0.00E+000  0.00E+000  0.00E+000  0.00E+000
Cerium       0.00E+000  0.00E+000  0.00E+000  0.00E+000
Strontinum   0.00E+000  0.00E+000  0.00E+000  0.00E+000

             air_space  water_pool  surface    recirc     thyroid    wbody      skin       CEDE
Kr83m        3.56E-111  0.00E+000   0.00E+000  0.00E+000  0.00E+000  0.00E+000  0.00E+000  0.00E+000
Kr85m        2.78E-043  0.00E+000   0.00E+000  0.00E+000  0.00E+000  0.00E+000  0.00E+000  0.00E+000
Kr85         7.58E+005  0.00E+000   0.00E+000  0.00E+000  0.00E+000  0.00E+000  0.00E+000  0.00E+000
Kr87         1.94E-164  0.00E+000   0.00E+000  0.00E+000  0.00E+000  0.00E+000  0.00E+000  0.00E+000
Kr88         1.22E-070  0.00E+000   0.00E+000  0.00E+000  0.00E+000  0.00E+000  0.00E+000  0.00E+000
Kr89         6.67E-322  0.00E+000   0.00E+000  0.00E+000  0.00E+000  0.00E+000  0.00E+000  0.00E+000
Xe131m       9.16E+004  0.00E+000   0.00E+000  0.00E+000  0.00E+000  0.00E+000  0.00E+000  0.00E+000
Xe133m       3.63E+002  0.00E+000   0.00E+000  0.00E+000  0.00E+000  0.00E+000  0.00E+000  0.00E+000
Xe133        2.61E+006  0.00E+000   0.00E+000  0.00E+000  0.00E+000  0.00E+000  0.00E+000  0.00E+000
Xe135m       2.85E-321  0.00E+000   0.00E+000  0.00E+000  0.00E+000  0.00E+000  0.00E+000  0.00E+000
Xe135        3.66E-016  0.00E+000   0.00E+000  0.00E+000  0.00E+000  0.00E+000  0.00E+000  0.00E+000
Xe137        8.05E-322  0.00E+000   0.00E+000  0.00E+000  0.00E+000  0.00E+000  0.00E+000  0.00E+000
Xe138        3.56E-321  0.00E+000   0.00E+000  0.00E+000  0.00E+000  0.00E+000  0.00E+000  0.00E+000
I131Org      1.76E+003  0.00E+000   0.00E+000  0.00E+000  0.00E+000  0.00E+000  0.00E+000  0.00E+000
I132Org      2.61E-089  0.00E+000   0.00E+000  0.00E+000  0.00E+000  0.00E+000  0.00E+000  0.00E+000
I133Org      1.90E-006  0.00E+000   0.00E+000  0.00E+000  0.00E+000  0.00E+000  0.00E+000  0.00E+000
I134Org      4.26E-247  0.00E+000   0.00E+000  0.00E+000  0.00E+000  0.00E+000  0.00E+000  0.00E+000
I135Org      2.05E-028  0.00E+000   0.00E+000  0.00E+000  0.00E+000  0.00E+000  0.00E+000  0.00E+000
I131Elem     8.67E-001  0.00E+000   1.74E+005  0.00E+000  0.00E+000  0.00E+000  0.00E+000  0.00E+000
I132Elem     1.84E-003  0.00E+000   3.29E+002  0.00E+000  0.00E+000  0.00E+000  0.00E+000  0.00E+000
I133Elem     5.49E-010  0.00E+000   1.18E-004  0.00E+000  0.00E+000  0.00E+000  0.00E+000  0.00E+000
```

I134Elem	3.40E-251	0.00E+000	2.92E-245	0.00E+000	0.00E+000	0.00E+000	0.00E+000	0.00E+000
I135Elem	6.64E-032	0.00E+000	1.66E-026	0.00E+000	0.00E+000	0.00E+000	0.00E+000	0.00E+000
I131Part	9.99E+000	0.00E+000	2.14E+006	0.00E+000	0.00E+000	0.00E+000	0.00E+000	0.00E+000
I132Part	1.49E-091	0.00E+000	3.22E-086	0.00E+000	0.00E+000	0.00E+000	0.00E+000	0.00E+000
I133Part	1.08E-008	0.00E+000	2.31E-003	0.00E+000	0.00E+000	0.00E+000	0.00E+000	0.00E+000
I134Part	2.36E-249	0.00E+000	5.72E-244	0.00E+000	0.00E+000	0.00E+000	0.00E+000	0.00E+000
I135Part	1.50E-030	0.00E+000	3.26E-025	0.00E+000	0.00E+000	0.00E+000	0.00E+000	0.00E+000
Rb86	5.83E-002	0.00E+000	1.30E+004	0.00E+000	0.00E+000	0.00E+000	0.00E+000	0.00E+000
Cs134	2.43E+001	0.00E+000	5.43E+006	0.00E+000	0.00E+000	0.00E+000	0.00E+000	0.00E+000
Cs136	1.12E+000	0.00E+000	2.50E+005	0.00E+000	0.00E+000	0.00E+000	0.00E+000	0.00E+000
Cs137	2.00E+001	0.00E+000	4.47E+006	0.00E+000	0.00E+000	0.00E+000	0.00E+000	0.00E+000
Sb127	1.52E-002	0.00E+000	2.72E+003	0.00E+000	0.00E+000	0.00E+000	0.00E+000	0.00E+000
Sb129	1.80E-049	0.00E+000	2.93E-044	0.00E+000	0.00E+000	0.00E+000	0.00E+000	0.00E+000
Te127m	3.76E-001	0.00E+000	6.73E+004	0.00E+000	0.00E+000	0.00E+000	0.00E+000	0.00E+000
Te127	1.70E-003	0.00E+000	3.04E+002	0.00E+000	0.00E+000	0.00E+000	0.00E+000	0.00E+000
Te129m	7.42E-001	0.00E+000	1.33E+005	0.00E+000	0.00E+000	0.00E+000	0.00E+000	0.00E+000
Te129	5.25E-050	0.00E+000	1.15E-044	0.00E+000	0.00E+000	0.00E+000	0.00E+000	0.00E+000
Te131m	2.45E-007	0.00E+000	4.38E-002	0.00E+000	0.00E+000	0.00E+000	0.00E+000	0.00E+000
Te132	5.87E-002	0.00E+000	1.05E+004	0.00E+000	0.00E+000	0.00E+000	0.00E+000	0.00E+000
Ba137m	3.22E-006	0.00E+000	7.21E-001	0.00E+000	0.00E+000	0.00E+000	0.00E+000	0.00E+000
Ba139	5.20E-156	0.00E+000	1.13E-150	0.00E+000	0.00E+000	0.00E+000	0.00E+000	0.00E+000
Ba140	3.58E+000	0.00E+000	6.40E+005	0.00E+000	0.00E+000	0.00E+000	0.00E+000	0.00E+000
Mo99	1.43E-003	0.00E+000	2.57E+002	0.00E+000	0.00E+000	0.00E+000	0.00E+000	0.00E+000
Tc99m	1.42E-004	0.00E+000	2.55E+001	0.00E+000	0.00E+000	0.00E+000	0.00E+000	0.00E+000
Ru103	1.38E+000	0.00E+000	2.47E+005	0.00E+000	0.00E+000	0.00E+000	0.00E+000	0.00E+000
Ru105	5.39E-048	0.00E+000	9.65E-043	0.00E+000	0.00E+000	0.00E+000	0.00E+000	0.00E+000
Ru106	9.60E-001	0.00E+000	1.72E+005	0.00E+000	0.00E+000	0.00E+000	0.00E+000	0.00E+000
Rh105	2.65E-006	0.00E+000	4.92E-001	0.00E+000	0.00E+000	0.00E+000	0.00E+000	0.00E+000
Y90	3.57E-004	0.00E+000	6.39E+001	0.00E+000	0.00E+000	0.00E+000	0.00E+000	0.00E+000
Y91	6.40E+000	0.00E+000	1.19E+006	0.00E+000	0.00E+000	0.00E+000	0.00E+000	0.00E+000
Y92	2.36E-059	0.00E+000	4.39E-054	0.00E+000	0.00E+000	0.00E+000	0.00E+000	0.00E+000
Y93	1.85E-023	0.00E+000	7.79E-018	0.00E+000	0.00E+000	0.00E+000	0.00E+000	0.00E+000
Zr95	1.19E-001	0.00E+000	2.13E+004	0.00E+000	0.00E+000	0.00E+000	0.00E+000	0.00E+000
Zr97	3.18E-014	0.00E+000	5.72E-009	0.00E+000	0.00E+000	0.00E+000	0.00E+000	0.00E+000
Nb95	1.26E-001	0.00E+000	2.25E+004	0.00E+000	0.00E+000	0.00E+000	0.00E+000	0.00E+000
La140	5.41E-001	0.00E+000	9.68E+004	0.00E+000	0.00E+000	0.00E+000	0.00E+000	0.00E+000
La141	4.14E-057	0.00E+000	7.44E-052	0.00E+000	0.00E+000	0.00E+000	0.00E+000	0.00E+000
La142	1.18E-143	0.00E+000	4.21E-138	0.00E+000	0.00E+000	0.00E+000	0.00E+000	0.00E+000
Pr143	1.25E-001	0.00E+000	2.25E+004	0.00E+000	0.00E+000	0.00E+000	0.00E+000	0.00E+000
Nd147	1.05E-002	0.00E+000	1.88E+003	0.00E+000	0.00E+000	0.00E+000	0.00E+000	0.00E+000
Am241	2.97E-005	0.00E+000	5.32E+000	0.00E+000	0.00E+000	0.00E+000	0.00E+000	0.00E+000
Cm242	5.94E-003	0.00E+000	1.06E+003	0.00E+000	0.00E+000	0.00E+000	0.00E+000	0.00E+000
Cm244	5.45E-004	0.00E+000	9.74E+001	0.00E+000	0.00E+000	0.00E+000	0.00E+000	0.00E+000
Ce141	2.91E-001	0.00E+000	5.34E+004	0.00E+000	0.00E+000	0.00E+000	0.00E+000	0.00E+000
Ce143	6.43E-008	0.00E+000	1.15E-002	0.00E+000	0.00E+000	0.00E+000	0.00E+000	0.00E+000
Ce144	2.98E-001	0.00E+000	5.32E+004	0.00E+000	0.00E+000	0.00E+000	0.00E+000	0.00E+000

Np239	9.26E-004	0.00E+000	1.66E+002	0.00E+000	0.00E+000	0.00E+000	0.00E+000	0.00E+000
Pu238	9.40E-004	0.00E+000	1.68E+002	0.00E+000	0.00E+000	0.00E+000	0.00E+000	0.00E+000
Pu239	1.86E-004	0.00E+000	3.33E+001	0.00E+000	0.00E+000	0.00E+000	0.00E+000	0.00E+000
Pu240	3.06E-004	0.00E+000	5.47E+001	0.00E+000	0.00E+000	0.00E+000	0.00E+000	0.00E+000
Pu241	8.67E-002	0.00E+000	1.55E+004	0.00E+000	0.00E+000	0.00E+000	0.00E+000	0.00E+000
Sr89	5.31E+000	0.00E+000	9.49E+005	0.00E+000	0.00E+000	0.00E+000	0.00E+000	0.00E+000
Sr90	1.32E+000	0.00E+000	2.36E+005	0.00E+000	0.00E+000	0.00E+000	0.00E+000	0.00E+000
Sr91	2.43E-022	0.00E+000	4.34E-017	0.00E+000	0.00E+000	0.00E+000	0.00E+000	0.00E+000
Sr92	1.03E-081	0.00E+000	1.85E-076	0.00E+000	0.00E+000	0.00E+000	0.00E+000	0.00E+000

WW

	thyroid	wbody	skin	CEDE
Total dose:	0.00E+000	0.00E+000	0.00E+000	0.00E+000
Noble gas	0.00E+000	0.00E+000	0.00E+000	0.00E+000
Org iodine	0.00E+000	0.00E+000	0.00E+000	0.00E+000
Elem iodine	0.00E+000	0.00E+000	0.00E+000	0.00E+000
Part iodine	0.00E+000	0.00E+000	0.00E+000	0.00E+000
Cesium	0.00E+000	0.00E+000	0.00E+000	0.00E+000
Tellurium	0.00E+000	0.00E+000	0.00E+000	0.00E+000
Barium	0.00E+000	0.00E+000	0.00E+000	0.00E+000
Noble metal	0.00E+000	0.00E+000	0.00E+000	0.00E+000
Lanthanides	0.00E+000	0.00E+000	0.00E+000	0.00E+000
Cerium	0.00E+000	0.00E+000	0.00E+000	0.00E+000
Strontinum	0.00E+000	0.00E+000	0.00E+000	0.00E+000

	air_space	water_pool	surface	recirc	thyroid	wbody	skin	CEDE
Kr83m	6.08E-111	0.00E+000	0.00E+000	0.00E+000	0.00E+000	0.00E+000	0.00E+000	0.00E+000
Kr85m	6.16E-043	0.00E+000	0.00E+000	0.00E+000	0.00E+000	0.00E+000	0.00E+000	0.00E+000
Kr85	5.45E+005	0.00E+000	0.00E+000	0.00E+000	0.00E+000	0.00E+000	0.00E+000	0.00E+000
Kr87	1.41E-164	0.00E+000	0.00E+000	0.00E+000	0.00E+000	0.00E+000	0.00E+000	0.00E+000
Kr88	9.40E-071	0.00E+000	0.00E+000	0.00E+000	0.00E+000	0.00E+000	0.00E+000	0.00E+000
Kr89	6.62E-322	0.00E+000	0.00E+000	0.00E+000	0.00E+000	0.00E+000	0.00E+000	0.00E+000
Xe131m	6.58E+004	0.00E+000	0.00E+000	0.00E+000	0.00E+000	0.00E+000	0.00E+000	0.00E+000
Xe133m	2.61E+002	0.00E+000	0.00E+000	0.00E+000	0.00E+000	0.00E+000	0.00E+000	0.00E+000
Xe133	1.88E+006	0.00E+000	0.00E+000	0.00E+000	0.00E+000	0.00E+000	0.00E+000	0.00E+000
Xe135m	2.20E-321	0.00E+000	0.00E+000	0.00E+000	0.00E+000	0.00E+000	0.00E+000	0.00E+000
Xe135	2.52E-016	0.00E+000	0.00E+000	0.00E+000	0.00E+000	0.00E+000	0.00E+000	0.00E+000
Xe137	6.87E-322	0.00E+000	0.00E+000	0.00E+000	0.00E+000	0.00E+000	0.00E+000	0.00E+000
Xe138	2.58E-321	0.00E+000	0.00E+000	0.00E+000	0.00E+000	0.00E+000	0.00E+000	0.00E+000
I131Org	1.27E+003	0.00E+000	0.00E+000	0.00E+000	0.00E+000	0.00E+000	0.00E+000	0.00E+000
I132Org	1.94E-089	0.00E+000	0.00E+000	0.00E+000	0.00E+000	0.00E+000	0.00E+000	0.00E+000
I133Org	1.37E-006	0.00E+000	0.00E+000	0.00E+000	0.00E+000	0.00E+000	0.00E+000	0.00E+000
I134Org	3.84E-247	0.00E+000	0.00E+000	0.00E+000	0.00E+000	0.00E+000	0.00E+000	0.00E+000
I135Org	2.56E-028	0.00E+000	0.00E+000	0.00E+000	0.00E+000	0.00E+000	0.00E+000	0.00E+000
I131Elem	6.23E-001	0.00E+000	0.00E+000	0.00E+000	0.00E+000	0.00E+000	0.00E+000	0.00E+000

I132Elem	1.32E-003	0.00E+000	0.00E+000	0.00E+000	0.00E+000	0.00E+000	0.00E+000	0.00E+000
I133Elem	3.95E-010	0.00E+000	0.00E+000	0.00E+000	0.00E+000	0.00E+000	0.00E+000	0.00E+000
I134Elem	2.00E-250	0.00E+000	0.00E+000	0.00E+000	0.00E+000	0.00E+000	0.00E+000	0.00E+000
I135Elem	6.68E-032	0.00E+000	0.00E+000	0.00E+000	0.00E+000	0.00E+000	0.00E+000	0.00E+000
I131Part	7.18E+000	0.00E+000	0.00E+000	0.00E+000	0.00E+000	0.00E+000	0.00E+000	0.00E+000
I132Part	1.09E-091	0.00E+000	0.00E+000	0.00E+000	0.00E+000	0.00E+000	0.00E+000	0.00E+000
I133Part	7.74E-009	0.00E+000	0.00E+000	0.00E+000	0.00E+000	0.00E+000	0.00E+000	0.00E+000
I134Part	2.23E-249	0.00E+000	0.00E+000	0.00E+000	0.00E+000	0.00E+000	0.00E+000	0.00E+000
I135Part	1.12E-030	0.00E+000	0.00E+000	0.00E+000	0.00E+000	0.00E+000	0.00E+000	0.00E+000
Rb86	4.19E-002	0.00E+000	0.00E+000	0.00E+000	0.00E+000	0.00E+000	0.00E+000	0.00E+000
Cs134	1.74E+001	0.00E+000	0.00E+000	0.00E+000	0.00E+000	0.00E+000	0.00E+000	0.00E+000
Cs136	8.03E-001	0.00E+000	0.00E+000	0.00E+000	0.00E+000	0.00E+000	0.00E+000	0.00E+000
Cs137	1.44E+001	0.00E+000	0.00E+000	0.00E+000	0.00E+000	0.00E+000	0.00E+000	0.00E+000
Sb127	1.10E-002	0.00E+000	0.00E+000	0.00E+000	0.00E+000	0.00E+000	0.00E+000	0.00E+000
Sb129	1.02E-049	0.00E+000	0.00E+000	0.00E+000	0.00E+000	0.00E+000	0.00E+000	0.00E+000
Te127m	2.71E-001	0.00E+000	0.00E+000	0.00E+000	0.00E+000	0.00E+000	0.00E+000	0.00E+000
Te127	1.22E-003	0.00E+000	0.00E+000	0.00E+000	0.00E+000	0.00E+000	0.00E+000	0.00E+000
Te129m	5.34E-001	0.00E+000	0.00E+000	0.00E+000	0.00E+000	0.00E+000	0.00E+000	0.00E+000
Te129	5.79E-050	0.00E+000	0.00E+000	0.00E+000	0.00E+000	0.00E+000	0.00E+000	0.00E+000
Te131m	1.76E-007	0.00E+000	0.00E+000	0.00E+000	0.00E+000	0.00E+000	0.00E+000	0.00E+000
Te132	4.22E-002	0.00E+000	0.00E+000	0.00E+000	0.00E+000	0.00E+000	0.00E+000	0.00E+000
Ba137m	2.32E-006	0.00E+000	0.00E+000	0.00E+000	0.00E+000	0.00E+000	0.00E+000	0.00E+000
Ba139	5.67E-156	0.00E+000	0.00E+000	0.00E+000	0.00E+000	0.00E+000	0.00E+000	0.00E+000
Ba140	2.57E+000	0.00E+000	0.00E+000	0.00E+000	0.00E+000	0.00E+000	0.00E+000	0.00E+000
Mo99	1.03E-003	0.00E+000	0.00E+000	0.00E+000	0.00E+000	0.00E+000	0.00E+000	0.00E+000
Tc99m	1.02E-004	0.00E+000	0.00E+000	0.00E+000	0.00E+000	0.00E+000	0.00E+000	0.00E+000
Ru103	9.95E-001	0.00E+000	0.00E+000	0.00E+000	0.00E+000	0.00E+000	0.00E+000	0.00E+000
Ru105	3.88E-048	0.00E+000	0.00E+000	0.00E+000	0.00E+000	0.00E+000	0.00E+000	0.00E+000
Ru106	6.90E-001	0.00E+000	0.00E+000	0.00E+000	0.00E+000	0.00E+000	0.00E+000	0.00E+000
Rh105	1.90E-006	0.00E+000	0.00E+000	0.00E+000	0.00E+000	0.00E+000	0.00E+000	0.00E+000
Y90	2.57E-004	0.00E+000	0.00E+000	0.00E+000	0.00E+000	0.00E+000	0.00E+000	0.00E+000
Y91	4.60E+000	0.00E+000	0.00E+000	0.00E+000	0.00E+000	0.00E+000	0.00E+000	0.00E+000
Y92	1.69E-059	0.00E+000	0.00E+000	0.00E+000	0.00E+000	0.00E+000	0.00E+000	0.00E+000
Y93	5.63E-023	0.00E+000	0.00E+000	0.00E+000	0.00E+000	0.00E+000	0.00E+000	0.00E+000
Zr95	8.57E-002	0.00E+000	0.00E+000	0.00E+000	0.00E+000	0.00E+000	0.00E+000	0.00E+000
Zr97	2.32E-014	0.00E+000	0.00E+000	0.00E+000	0.00E+000	0.00E+000	0.00E+000	0.00E+000
Nb95	9.05E-002	0.00E+000	0.00E+000	0.00E+000	0.00E+000	0.00E+000	0.00E+000	0.00E+000
La140	3.89E-001	0.00E+000	0.00E+000	0.00E+000	0.00E+000	0.00E+000	0.00E+000	0.00E+000
La141	3.01E-057	0.00E+000	0.00E+000	0.00E+000	0.00E+000	0.00E+000	0.00E+000	0.00E+000
La142	2.86E-143	0.00E+000	0.00E+000	0.00E+000	0.00E+000	0.00E+000	0.00E+000	0.00E+000
Pr143	8.96E-002	0.00E+000	0.00E+000	0.00E+000	0.00E+000	0.00E+000	0.00E+000	0.00E+000
Nd147	7.57E-003	0.00E+000	0.00E+000	0.00E+000	0.00E+000	0.00E+000	0.00E+000	0.00E+000
Am241	2.14E-005	0.00E+000	0.00E+000	0.00E+000	0.00E+000	0.00E+000	0.00E+000	0.00E+000
Cm242	4.27E-003	0.00E+000	0.00E+000	0.00E+000	0.00E+000	0.00E+000	0.00E+000	0.00E+000
Cm244	3.92E-004	0.00E+000	0.00E+000	0.00E+000	0.00E+000	0.00E+000	0.00E+000	0.00E+000
Ce141	2.09E-001	0.00E+000	0.00E+000	0.00E+000	0.00E+000	0.00E+000	0.00E+000	0.00E+000

Ce143	4.63E-008	0.00E+000	0.00E+000	0.00E+000	0.00E+000	0.00E+000	0.00E+000	0.00E+000
Ce144	2.14E-001	0.00E+000	0.00E+000	0.00E+000	0.00E+000	0.00E+000	0.00E+000	0.00E+000
Np239	6.66E-004	0.00E+000	0.00E+000	0.00E+000	0.00E+000	0.00E+000	0.00E+000	0.00E+000
Pu238	6.76E-004	0.00E+000	0.00E+000	0.00E+000	0.00E+000	0.00E+000	0.00E+000	0.00E+000
Pu239	1.34E-004	0.00E+000	0.00E+000	0.00E+000	0.00E+000	0.00E+000	0.00E+000	0.00E+000
Pu240	2.20E-004	0.00E+000	0.00E+000	0.00E+000	0.00E+000	0.00E+000	0.00E+000	0.00E+000
Pu241	6.24E-002	0.00E+000	0.00E+000	0.00E+000	0.00E+000	0.00E+000	0.00E+000	0.00E+000
Sr89	3.82E+000	0.00E+000	0.00E+000	0.00E+000	0.00E+000	0.00E+000	0.00E+000	0.00E+000
Sr90	9.51E-001	0.00E+000	0.00E+000	0.00E+000	0.00E+000	0.00E+000	0.00E+000	0.00E+000
Sr91	1.75E-022	0.00E+000	0.00E+000	0.00E+000	0.00E+000	0.00E+000	0.00E+000	0.00E+000
Sr92	7.44E-082	0.00E+000	0.00E+000	0.00E+000	0.00E+000	0.00E+000	0.00E+000	0.00E+000

RB

	thyroid	wbody	skin	CEDE
Total dose:	0.00E+000	0.00E+000	0.00E+000	0.00E+000
Noble gas	0.00E+000	0.00E+000	0.00E+000	0.00E+000
Org iodine	0.00E+000	0.00E+000	0.00E+000	0.00E+000
Elem iodine	0.00E+000	0.00E+000	0.00E+000	0.00E+000
Part iodine	0.00E+000	0.00E+000	0.00E+000	0.00E+000
Cesium	0.00E+000	0.00E+000	0.00E+000	0.00E+000
Tellurium	0.00E+000	0.00E+000	0.00E+000	0.00E+000
Barium	0.00E+000	0.00E+000	0.00E+000	0.00E+000
Noble metal	0.00E+000	0.00E+000	0.00E+000	0.00E+000
Lanthanides	0.00E+000	0.00E+000	0.00E+000	0.00E+000
Cerium	0.00E+000	0.00E+000	0.00E+000	0.00E+000
Strontinum	0.00E+000	0.00E+000	0.00E+000	0.00E+000

	air_space	water_pool	surface	recirc	thyroid	wbody	skin	CEDE
Kr83m	4.67E-114	0.00E+000	0.00E+000	0.00E+000	0.00E+000	0.00E+000	0.00E+000	0.00E+000
Kr85m	4.38E-046	0.00E+000	0.00E+000	0.00E+000	0.00E+000	0.00E+000	0.00E+000	0.00E+000
Kr85	6.30E+002	0.00E+000	0.00E+000	0.00E+000	0.00E+000	0.00E+000	0.00E+000	0.00E+000
Kr87	1.63E-167	0.00E+000	0.00E+000	0.00E+000	0.00E+000	0.00E+000	0.00E+000	0.00E+000
Kr88	1.05E-073	0.00E+000	0.00E+000	0.00E+000	0.00E+000	0.00E+000	0.00E+000	0.00E+000
Kr89	6.77E-322	0.00E+000	0.00E+000	0.00E+000	0.00E+000	0.00E+000	0.00E+000	0.00E+000
Xe131m	7.61E+001	0.00E+000	0.00E+000	0.00E+000	0.00E+000	0.00E+000	0.00E+000	0.00E+000
Xe133m	3.01E-001	0.00E+000	0.00E+000	0.00E+000	0.00E+000	0.00E+000	0.00E+000	0.00E+000
Xe133	2.79E+003	0.00E+000	0.00E+000	0.00E+000	0.00E+000	0.00E+000	0.00E+000	0.00E+000
Xe135m	3.26E-321	0.00E+000	0.00E+000	0.00E+000	0.00E+000	0.00E+000	0.00E+000	0.00E+000
Xe135	5.72E-019	0.00E+000	0.00E+000	0.00E+000	0.00E+000	0.00E+000	0.00E+000	0.00E+000
Xe137	5.14E-322	0.00E+000	0.00E+000	0.00E+000	0.00E+000	0.00E+000	0.00E+000	0.00E+000
Xe138	3.42E-321	0.00E+000	0.00E+000	0.00E+000	0.00E+000	0.00E+000	0.00E+000	0.00E+000
I131Org	4.85E+000	0.00E+000	0.00E+000	0.00E+000	0.00E+000	0.00E+000	0.00E+000	0.00E+000
I132Org	7.28E-092	0.00E+000	0.00E+000	0.00E+000	0.00E+000	0.00E+000	0.00E+000	0.00E+000
I133Org	5.22E-009	0.00E+000	0.00E+000	0.00E+000	0.00E+000	0.00E+000	0.00E+000	0.00E+000
I134Org	1.30E-249	0.00E+000	0.00E+000	0.00E+000	0.00E+000	0.00E+000	0.00E+000	0.00E+000

I135Org	7.39E-031	0.00E+000	0.00E+000	0.00E+000	0.00E+000	0.00E+000	0.00E+000	0.00E+000
I131Elem	1.09E+002	0.00E+000	0.00E+000	0.00E+000	0.00E+000	0.00E+000	0.00E+000	0.00E+000
I132Elem	1.53E-006	0.00E+000	0.00E+000	0.00E+000	0.00E+000	0.00E+000	0.00E+000	0.00E+000
I133Elem	1.18E-007	0.00E+000	0.00E+000	0.00E+000	0.00E+000	0.00E+000	0.00E+000	0.00E+000
I134Elem	2.92E-248	0.00E+000	0.00E+000	0.00E+000	0.00E+000	0.00E+000	0.00E+000	0.00E+000
I135Elem	1.66E-029	0.00E+000	0.00E+000	0.00E+000	0.00E+000	0.00E+000	0.00E+000	0.00E+000
I131Part	2.97E-002	0.00E+000	0.00E+000	0.00E+000	0.00E+000	0.00E+000	0.00E+000	0.00E+000
I132Part	4.47E-094	0.00E+000	0.00E+000	0.00E+000	0.00E+000	0.00E+000	0.00E+000	0.00E+000
I133Part	3.20E-011	0.00E+000	0.00E+000	0.00E+000	0.00E+000	0.00E+000	0.00E+000	0.00E+000
I134Part	7.95E-252	0.00E+000	0.00E+000	0.00E+000	0.00E+000	0.00E+000	0.00E+000	0.00E+000
I135Part	4.52E-033	0.00E+000	0.00E+000	0.00E+000	0.00E+000	0.00E+000	0.00E+000	0.00E+000
Rb86	4.85E-005	0.00E+000	0.00E+000	0.00E+000	0.00E+000	0.00E+000	0.00E+000	0.00E+000
Cs134	2.02E-002	0.00E+000	0.00E+000	0.00E+000	0.00E+000	0.00E+000	0.00E+000	0.00E+000
Cs136	9.28E-004	0.00E+000	0.00E+000	0.00E+000	0.00E+000	0.00E+000	0.00E+000	0.00E+000
Cs137	1.66E-002	0.00E+000	0.00E+000	0.00E+000	0.00E+000	0.00E+000	0.00E+000	0.00E+000
Sb127	1.27E-005	0.00E+000	0.00E+000	0.00E+000	0.00E+000	0.00E+000	0.00E+000	0.00E+000
Sb129	1.36E-052	0.00E+000	0.00E+000	0.00E+000	0.00E+000	0.00E+000	0.00E+000	0.00E+000
Te127m	3.13E-004	0.00E+000	0.00E+000	0.00E+000	0.00E+000	0.00E+000	0.00E+000	0.00E+000
Te127	1.41E-006	0.00E+000	0.00E+000	0.00E+000	0.00E+000	0.00E+000	0.00E+000	0.00E+000
Te129m	6.17E-004	0.00E+000	0.00E+000	0.00E+000	0.00E+000	0.00E+000	0.00E+000	0.00E+000
Te129	5.34E-053	0.00E+000	0.00E+000	0.00E+000	0.00E+000	0.00E+000	0.00E+000	0.00E+000
Te131m	2.04E-010	0.00E+000	0.00E+000	0.00E+000	0.00E+000	0.00E+000	0.00E+000	0.00E+000
Te132	4.88E-005	0.00E+000	0.00E+000	0.00E+000	0.00E+000	0.00E+000	0.00E+000	0.00E+000
Ba137m	2.68E-009	0.00E+000	0.00E+000	0.00E+000	0.00E+000	0.00E+000	0.00E+000	0.00E+000
Ba139	5.26E-159	0.00E+000	0.00E+000	0.00E+000	0.00E+000	0.00E+000	0.00E+000	0.00E+000
Ba140	2.97E-003	0.00E+000	0.00E+000	0.00E+000	0.00E+000	0.00E+000	0.00E+000	0.00E+000
Mo99	1.19E-006	0.00E+000	0.00E+000	0.00E+000	0.00E+000	0.00E+000	0.00E+000	0.00E+000
Tc99m	1.18E-007	0.00E+000	0.00E+000	0.00E+000	0.00E+000	0.00E+000	0.00E+000	0.00E+000
Ru103	1.15E-003	0.00E+000	0.00E+000	0.00E+000	0.00E+000	0.00E+000	0.00E+000	0.00E+000
Ru105	4.49E-051	0.00E+000	0.00E+000	0.00E+000	0.00E+000	0.00E+000	0.00E+000	0.00E+000
Ru106	7.97E-004	0.00E+000	0.00E+000	0.00E+000	0.00E+000	0.00E+000	0.00E+000	0.00E+000
Rh105	2.20E-009	0.00E+000	0.00E+000	0.00E+000	0.00E+000	0.00E+000	0.00E+000	0.00E+000
Y90	2.97E-007	0.00E+000	0.00E+000	0.00E+000	0.00E+000	0.00E+000	0.00E+000	0.00E+000
Y91	5.32E-003	0.00E+000	0.00E+000	0.00E+000	0.00E+000	0.00E+000	0.00E+000	0.00E+000
Y92	1.96E-062	0.00E+000	0.00E+000	0.00E+000	0.00E+000	0.00E+000	0.00E+000	0.00E+000
Y93	3.62E-026	0.00E+000	0.00E+000	0.00E+000	0.00E+000	0.00E+000	0.00E+000	0.00E+000
Zr95	9.90E-005	0.00E+000	0.00E+000	0.00E+000	0.00E+000	0.00E+000	0.00E+000	0.00E+000
Zr97	2.66E-017	0.00E+000	0.00E+000	0.00E+000	0.00E+000	0.00E+000	0.00E+000	0.00E+000
Nb95	1.05E-004	0.00E+000	0.00E+000	0.00E+000	0.00E+000	0.00E+000	0.00E+000	0.00E+000
La140	4.50E-004	0.00E+000	0.00E+000	0.00E+000	0.00E+000	0.00E+000	0.00E+000	0.00E+000
La141	3.46E-060	0.00E+000	0.00E+000	0.00E+000	0.00E+000	0.00E+000	0.00E+000	0.00E+000
La142	1.97E-146	0.00E+000	0.00E+000	0.00E+000	0.00E+000	0.00E+000	0.00E+000	0.00E+000
Pr143	1.04E-004	0.00E+000	0.00E+000	0.00E+000	0.00E+000	0.00E+000	0.00E+000	0.00E+000
Nd147	8.75E-006	0.00E+000	0.00E+000	0.00E+000	0.00E+000	0.00E+000	0.00E+000	0.00E+000
Am241	2.47E-008	0.00E+000	0.00E+000	0.00E+000	0.00E+000	0.00E+000	0.00E+000	0.00E+000
Cm242	4.93E-006	0.00E+000	0.00E+000	0.00E+000	0.00E+000	0.00E+000	0.00E+000	0.00E+000

Cm244	4.53E-007	0.00E+000	0.00E+000	0.00E+000	0.00E+000	0.00E+000	0.00E+000	0.00E+000
Ce141	2.42E-004	0.00E+000	0.00E+000	0.00E+000	0.00E+000	0.00E+000	0.00E+000	0.00E+000
Ce143	5.34E-011	0.00E+000	0.00E+000	0.00E+000	0.00E+000	0.00E+000	0.00E+000	0.00E+000
Ce144	2.47E-004	0.00E+000	0.00E+000	0.00E+000	0.00E+000	0.00E+000	0.00E+000	0.00E+000
Np239	7.69E-007	0.00E+000	0.00E+000	0.00E+000	0.00E+000	0.00E+000	0.00E+000	0.00E+000
Pu238	7.81E-007	0.00E+000	0.00E+000	0.00E+000	0.00E+000	0.00E+000	0.00E+000	0.00E+000
Pu239	1.55E-007	0.00E+000	0.00E+000	0.00E+000	0.00E+000	0.00E+000	0.00E+000	0.00E+000
Pu240	2.54E-007	0.00E+000	0.00E+000	0.00E+000	0.00E+000	0.00E+000	0.00E+000	0.00E+000
Pu241	7.21E-005	0.00E+000	0.00E+000	0.00E+000	0.00E+000	0.00E+000	0.00E+000	0.00E+000
Sr89	4.41E-003	0.00E+000	0.00E+000	0.00E+000	0.00E+000	0.00E+000	0.00E+000	0.00E+000
Sr90	1.10E-003	0.00E+000	0.00E+000	0.00E+000	0.00E+000	0.00E+000	0.00E+000	0.00E+000
Sr91	2.02E-025	0.00E+000	0.00E+000	0.00E+000	0.00E+000	0.00E+000	0.00E+000	0.00E+000
Sr92	8.59E-085	0.00E+000	0.00E+000	0.00E+000	0.00E+000	0.00E+000	0.00E+000	0.00E+000

SP

	thyroid	wbody	skin	CEDE
Total dose:	0.00E+000	0.00E+000	0.00E+000	0.00E+000
Noble gas	0.00E+000	0.00E+000	0.00E+000	0.00E+000
Org iodine	0.00E+000	0.00E+000	0.00E+000	0.00E+000
Elem iodine	0.00E+000	0.00E+000	0.00E+000	0.00E+000
Part iodine	0.00E+000	0.00E+000	0.00E+000	0.00E+000
Cesium	0.00E+000	0.00E+000	0.00E+000	0.00E+000
Tellurium	0.00E+000	0.00E+000	0.00E+000	0.00E+000
Barium	0.00E+000	0.00E+000	0.00E+000	0.00E+000
Noble metal	0.00E+000	0.00E+000	0.00E+000	0.00E+000
Lanthanides	0.00E+000	0.00E+000	0.00E+000	0.00E+000
Cerium	0.00E+000	0.00E+000	0.00E+000	0.00E+000
Strontinum	0.00E+000	0.00E+000	0.00E+000	0.00E+000

	air_space	water_pool	surface	recirc	thyroid	wbody	skin	CEDE
Kr83m	0.00E+000	0.00E+000	0.00E+000	0.00E+000	0.00E+000	0.00E+000	0.00E+000	0.00E+000
Kr85m	0.00E+000	0.00E+000	0.00E+000	0.00E+000	0.00E+000	0.00E+000	0.00E+000	0.00E+000
Kr85	0.00E+000	0.00E+000	0.00E+000	0.00E+000	0.00E+000	0.00E+000	0.00E+000	0.00E+000
Kr87	0.00E+000	0.00E+000	0.00E+000	0.00E+000	0.00E+000	0.00E+000	0.00E+000	0.00E+000
Kr88	0.00E+000	0.00E+000	0.00E+000	0.00E+000	0.00E+000	0.00E+000	0.00E+000	0.00E+000
Kr89	0.00E+000	0.00E+000	0.00E+000	0.00E+000	0.00E+000	0.00E+000	0.00E+000	0.00E+000
Xe131m	0.00E+000	0.00E+000	0.00E+000	0.00E+000	0.00E+000	0.00E+000	0.00E+000	0.00E+000
Xe133m	0.00E+000	0.00E+000	0.00E+000	0.00E+000	0.00E+000	0.00E+000	0.00E+000	0.00E+000
Xe133	2.29E+006	0.00E+000	0.00E+000	0.00E+000	0.00E+000	0.00E+000	0.00E+000	0.00E+000
Xe135m	0.00E+000	0.00E+000	0.00E+000	0.00E+000	0.00E+000	0.00E+000	0.00E+000	0.00E+000
Xe135	1.00E-015	0.00E+000	0.00E+000	0.00E+000	0.00E+000	0.00E+000	0.00E+000	0.00E+000
Xe137	0.00E+000	0.00E+000	0.00E+000	0.00E+000	0.00E+000	0.00E+000	0.00E+000	0.00E+000
Xe138	0.00E+000	0.00E+000	0.00E+000	0.00E+000	0.00E+000	0.00E+000	0.00E+000	0.00E+000
I131Org	6.22E+003	0.00E+000	0.00E+000	0.00E+000	0.00E+000	0.00E+000	0.00E+000	0.00E+000
I132Org	9.34E-089	0.00E+000	0.00E+000	0.00E+000	0.00E+000	0.00E+000	0.00E+000	0.00E+000

I133Org	6.70E-006	0.00E+000	0.00E+000	0.00E+000	0.00E+000	0.00E+000	0.00E+000	0.00E+000
I134Org	1.66E-246	0.00E+000	0.00E+000	0.00E+000	0.00E+000	0.00E+000	0.00E+000	0.00E+000
I135Org	9.47E-028	0.00E+000	0.00E+000	0.00E+000	0.00E+000	0.00E+000	0.00E+000	0.00E+000
I131Elem	2.01E+005	0.00E+000	0.00E+000	0.00E+000	0.00E+000	0.00E+000	0.00E+000	0.00E+000
I132Elem	3.02E-087	0.00E+000	0.00E+000	0.00E+000	0.00E+000	0.00E+000	0.00E+000	0.00E+000
I133Elem	2.17E-004	0.00E+000	0.00E+000	0.00E+000	0.00E+000	0.00E+000	0.00E+000	0.00E+000
I134Elem	5.37E-245	0.00E+000	0.00E+000	0.00E+000	0.00E+000	0.00E+000	0.00E+000	0.00E+000
I135Elem	3.06E-026	0.00E+000	0.00E+000	0.00E+000	0.00E+000	0.00E+000	0.00E+000	0.00E+000
I131Part	3.94E+006	0.00E+000	0.00E+000	0.00E+000	0.00E+000	0.00E+000	0.00E+000	0.00E+000
I132Part	5.91E-086	0.00E+000	0.00E+000	0.00E+000	0.00E+000	0.00E+000	0.00E+000	0.00E+000
I133Part	4.24E-003	0.00E+000	0.00E+000	0.00E+000	0.00E+000	0.00E+000	0.00E+000	0.00E+000
I134Part	1.05E-243	0.00E+000	0.00E+000	0.00E+000	0.00E+000	0.00E+000	0.00E+000	0.00E+000
I135Part	6.00E-025	0.00E+000	0.00E+000	0.00E+000	0.00E+000	0.00E+000	0.00E+000	0.00E+000
Rb86	0.00E+000	0.00E+000	0.00E+000	0.00E+000	0.00E+000	0.00E+000	0.00E+000	0.00E+000
Cs134	0.00E+000	0.00E+000	0.00E+000	0.00E+000	0.00E+000	0.00E+000	0.00E+000	0.00E+000
Cs136	0.00E+000	0.00E+000	0.00E+000	0.00E+000	0.00E+000	0.00E+000	0.00E+000	0.00E+000
Cs137	0.00E+000	0.00E+000	0.00E+000	0.00E+000	0.00E+000	0.00E+000	0.00E+000	0.00E+000
Sb127	0.00E+000	0.00E+000	0.00E+000	0.00E+000	0.00E+000	0.00E+000	0.00E+000	0.00E+000
Sb129	0.00E+000	0.00E+000	0.00E+000	0.00E+000	0.00E+000	0.00E+000	0.00E+000	0.00E+000
Te127m	0.00E+000	0.00E+000	0.00E+000	0.00E+000	0.00E+000	0.00E+000	0.00E+000	0.00E+000
Te127	0.00E+000	0.00E+000	0.00E+000	0.00E+000	0.00E+000	0.00E+000	0.00E+000	0.00E+000
Te129m	0.00E+000	0.00E+000	0.00E+000	0.00E+000	0.00E+000	0.00E+000	0.00E+000	0.00E+000
Te129	0.00E+000	0.00E+000	0.00E+000	0.00E+000	0.00E+000	0.00E+000	0.00E+000	0.00E+000
Te131m	0.00E+000	0.00E+000	0.00E+000	0.00E+000	0.00E+000	0.00E+000	0.00E+000	0.00E+000
Te132	0.00E+000	0.00E+000	0.00E+000	0.00E+000	0.00E+000	0.00E+000	0.00E+000	0.00E+000
Ba137m	0.00E+000	0.00E+000	0.00E+000	0.00E+000	0.00E+000	0.00E+000	0.00E+000	0.00E+000
Ba139	0.00E+000	0.00E+000	0.00E+000	0.00E+000	0.00E+000	0.00E+000	0.00E+000	0.00E+000
Ba140	0.00E+000	0.00E+000	0.00E+000	0.00E+000	0.00E+000	0.00E+000	0.00E+000	0.00E+000
Mo99	0.00E+000	0.00E+000	0.00E+000	0.00E+000	0.00E+000	0.00E+000	0.00E+000	0.00E+000
Tc99m	0.00E+000	0.00E+000	0.00E+000	0.00E+000	0.00E+000	0.00E+000	0.00E+000	0.00E+000
Ru103	0.00E+000	0.00E+000	0.00E+000	0.00E+000	0.00E+000	0.00E+000	0.00E+000	0.00E+000
Ru105	0.00E+000	0.00E+000	0.00E+000	0.00E+000	0.00E+000	0.00E+000	0.00E+000	0.00E+000
Ru106	0.00E+000	0.00E+000	0.00E+000	0.00E+000	0.00E+000	0.00E+000	0.00E+000	0.00E+000
Rh105	0.00E+000	0.00E+000	0.00E+000	0.00E+000	0.00E+000	0.00E+000	0.00E+000	0.00E+000
Y90	0.00E+000	0.00E+000	0.00E+000	0.00E+000	0.00E+000	0.00E+000	0.00E+000	0.00E+000
Y91	0.00E+000	0.00E+000	0.00E+000	0.00E+000	0.00E+000	0.00E+000	0.00E+000	0.00E+000
Y92	0.00E+000	0.00E+000	0.00E+000	0.00E+000	0.00E+000	0.00E+000	0.00E+000	0.00E+000
Y93	0.00E+000	0.00E+000	0.00E+000	0.00E+000	0.00E+000	0.00E+000	0.00E+000	0.00E+000
Zr95	0.00E+000	0.00E+000	0.00E+000	0.00E+000	0.00E+000	0.00E+000	0.00E+000	0.00E+000
Zr97	0.00E+000	0.00E+000	0.00E+000	0.00E+000	0.00E+000	0.00E+000	0.00E+000	0.00E+000
Nb95	0.00E+000	0.00E+000	0.00E+000	0.00E+000	0.00E+000	0.00E+000	0.00E+000	0.00E+000
La140	0.00E+000	0.00E+000	0.00E+000	0.00E+000	0.00E+000	0.00E+000	0.00E+000	0.00E+000
La141	0.00E+000	0.00E+000	0.00E+000	0.00E+000	0.00E+000	0.00E+000	0.00E+000	0.00E+000
La142	0.00E+000	0.00E+000	0.00E+000	0.00E+000	0.00E+000	0.00E+000	0.00E+000	0.00E+000
Pr143	0.00E+000	0.00E+000	0.00E+000	0.00E+000	0.00E+000	0.00E+000	0.00E+000	0.00E+000
Nd147	0.00E+000	0.00E+000	0.00E+000	0.00E+000	0.00E+000	0.00E+000	0.00E+000	0.00E+000

Am241	0.00E+000	0.00E+000	0.00E+000	0.00E+000	0.00E+000	0.00E+000	0.00E+000	0.00E+000
Cm242	0.00E+000	0.00E+000	0.00E+000	0.00E+000	0.00E+000	0.00E+000	0.00E+000	0.00E+000
Cm244	0.00E+000	0.00E+000	0.00E+000	0.00E+000	0.00E+000	0.00E+000	0.00E+000	0.00E+000
Ce141	0.00E+000	0.00E+000	0.00E+000	0.00E+000	0.00E+000	0.00E+000	0.00E+000	0.00E+000
Ce143	0.00E+000	0.00E+000	0.00E+000	0.00E+000	0.00E+000	0.00E+000	0.00E+000	0.00E+000
Ce144	0.00E+000	0.00E+000	0.00E+000	0.00E+000	0.00E+000	0.00E+000	0.00E+000	0.00E+000
Np239	0.00E+000	0.00E+000	0.00E+000	0.00E+000	0.00E+000	0.00E+000	0.00E+000	0.00E+000
Pu238	0.00E+000	0.00E+000	0.00E+000	0.00E+000	0.00E+000	0.00E+000	0.00E+000	0.00E+000
Pu239	0.00E+000	0.00E+000	0.00E+000	0.00E+000	0.00E+000	0.00E+000	0.00E+000	0.00E+000
Pu240	0.00E+000	0.00E+000	0.00E+000	0.00E+000	0.00E+000	0.00E+000	0.00E+000	0.00E+000
Pu241	0.00E+000	0.00E+000	0.00E+000	0.00E+000	0.00E+000	0.00E+000	0.00E+000	0.00E+000
Sr89	0.00E+000	0.00E+000	0.00E+000	0.00E+000	0.00E+000	0.00E+000	0.00E+000	0.00E+000
Sr90	0.00E+000	0.00E+000	0.00E+000	0.00E+000	0.00E+000	0.00E+000	0.00E+000	0.00E+000
Sr91	0.00E+000	0.00E+000	0.00E+000	0.00E+000	0.00E+000	0.00E+000	0.00E+000	0.00E+000
Sr92	0.00E+000	0.00E+000	0.00E+000	0.00E+000	0.00E+000	0.00E+000	0.00E+000	0.00E+000

Control_Room

	thyroid	wbody	skin	CEDE
Total dose:	8.18E+001	1.64E-001	3.21E+000	3.82E+000
Noble gas	0.00E+000	1.58E-001	3.16E+000	0.00E+000
Org iodine	1.18E+001	3.62E-004	3.78E-003	3.63E-001
Elem iodine	8.59E+000	4.32E-004	3.86E-003	2.65E-001
Part iodine	5.87E+001	4.92E-003	4.28E-002	1.83E+000
Cesium	5.60E-001	0.00E+000	0.00E+000	6.24E-001
Tellurium	2.09E+000	0.00E+000	0.00E+000	1.01E-001
Barium	3.88E-003	0.00E+000	0.00E+000	1.54E-002
Noble metal	2.07E-003	0.00E+000	0.00E+000	1.18E-001
Lanthanides	2.58E-004	0.00E+000	0.00E+000	8.80E-002
Cerium	1.35E-004	0.00E+000	0.00E+000	3.28E-001
Strontinum	6.07E-003	0.00E+000	0.00E+000	8.62E-002

	air_space	water_pool	surface	recirc	thyroid	wbody	skin	CEDE
Kr83m	6.13E-119	0.00E+000	0.00E+000	0.00E+000	0.00E+000	6.50E-008	0.00E+000	0.00E+000
Kr85m	5.74E-051	0.00E+000	0.00E+000	0.00E+000	0.00E+000	3.48E-003	1.05E-001	0.00E+000
Kr85	8.25E-003	0.00E+000	0.00E+000	0.00E+000	0.00E+000	5.66E-005	1.09E-001	0.00E+000
Kr87	2.14E-172	0.00E+000	0.00E+000	0.00E+000	0.00E+000	4.18E-003	1.80E-001	0.00E+000
Kr88	1.38E-078	0.00E+000	0.00E+000	0.00E+000	0.00E+000	5.93E-002	2.37E-001	0.00E+000
Kr89	6.72E-322	0.00E+000	0.00E+000	0.00E+000	0.00E+000	1.16E-006	2.48E-005	0.00E+000
Xe131m	9.97E-004	0.00E+000	0.00E+000	0.00E+000	0.00E+000	7.66E-005	1.87E-002	0.00E+000
Xe133m	3.95E-006	0.00E+000	0.00E+000	0.00E+000	0.00E+000	8.44E-004	8.47E-002	0.00E+000
Xe133	3.10E-002	0.00E+000	0.00E+000	0.00E+000	0.00E+000	5.37E-002	1.59E+000	0.00E+000
Xe135m	3.26E-321	0.00E+000	0.00E+000	0.00E+000	0.00E+000	2.68E-005	1.28E-004	0.00E+000
Xe135	5.02E-024	0.00E+000	0.00E+000	0.00E+000	0.00E+000	3.59E-002	8.28E-001	0.00E+000
Xe137	8.25E-322	0.00E+000	0.00E+000	0.00E+000	0.00E+000	4.38E-007	1.32E-004	0.00E+000
Xe138	3.55E-321	0.00E+000	0.00E+000	0.00E+000	0.00E+000	2.93E-004	4.11E-003	0.00E+000

I131Org	1.37E-005	0.00E+000	0.00E+000	0.00E+000	1.04E+001	8.27E-005	8.22E-004	3.15E-001
I132Org	2.05E-097	0.00E+000	0.00E+000	0.00E+000	4.62E-003	3.93E-005	2.26E-004	2.74E-004
I133Org	1.47E-014	0.00E+000	0.00E+000	0.00E+000	1.35E+000	1.05E-004	1.93E-003	4.38E-002
I134Org	3.72E-255	0.00E+000	0.00E+000	0.00E+000	2.04E-004	1.21E-005	7.65E-005	2.51E-005
I135Org	2.09E-036	0.00E+000	0.00E+000	0.00E+000	1.00E-001	1.23E-004	7.31E-004	3.93E-003
I131Elem	8.86E-006	0.00E+000	0.00E+000	0.00E+000	7.36E+000	5.87E-005	5.84E-004	2.24E-001
I132Elem	4.35E-008	0.00E+000	0.00E+000	0.00E+000	1.28E-002	1.09E-004	6.24E-004	7.56E-004
I133Elem	9.54E-015	0.00E+000	0.00E+000	0.00E+000	1.10E+000	8.63E-005	1.58E-003	3.59E-002
I134Elem	2.37E-255	0.00E+000	0.00E+000	0.00E+000	7.05E-004	4.19E-005	2.64E-004	8.68E-005
I135Elem	1.35E-036	0.00E+000	0.00E+000	0.00E+000	1.11E-001	1.37E-004	8.13E-004	4.37E-003
I131Part	3.44E-008	0.00E+000	0.00E+000	0.00E+000	4.45E+001	3.55E-004	3.53E-003	1.35E+000
I132Part	5.18E-100	0.00E+000	0.00E+000	0.00E+000	1.28E-001	1.09E-003	6.25E-003	7.58E-003
I133Part	3.70E-017	0.00E+000	0.00E+000	0.00E+000	1.25E+001	9.80E-004	1.79E-002	4.08E-001
I134Part	9.24E-258	0.00E+000	0.00E+000	0.00E+000	1.08E-002	6.44E-004	4.07E-003	1.34E-003
I135Part	5.23E-039	0.00E+000	0.00E+000	0.00E+000	1.51E+000	1.85E-003	1.10E-002	5.91E-002
Rb86	1.91E-010	0.00E+000	0.00E+000	0.00E+000	2.95E-004	0.00E+000	0.00E+000	3.97E-004
Cs134	7.93E-008	0.00E+000	0.00E+000	0.00E+000	3.48E-001	0.00E+000	0.00E+000	3.92E-001
Cs136	3.65E-009	0.00E+000	0.00E+000	0.00E+000	1.19E-002	0.00E+000	0.00E+000	1.36E-002
Cs137	6.53E-008	0.00E+000	0.00E+000	0.00E+000	2.00E-001	0.00E+000	0.00E+000	2.18E-001
Sb127	4.98E-011	0.00E+000	0.00E+000	0.00E+000	1.62E-004	0.00E+000	0.00E+000	4.30E-003
Sb129	5.36E-058	0.00E+000	0.00E+000	0.00E+000	3.68E-005	0.00E+000	0.00E+000	6.59E-004
Te127m	1.23E-009	0.00E+000	0.00E+000	0.00E+000	3.73E-005	0.00E+000	0.00E+000	2.24E-003
Te127	5.56E-012	0.00E+000	0.00E+000	0.00E+000	3.60E-006	0.00E+000	0.00E+000	1.68E-004
Te129m	2.43E-009	0.00E+000	0.00E+000	0.00E+000	1.79E-004	0.00E+000	0.00E+000	7.43E-003
Te129	2.10E-058	0.00E+000	0.00E+000	0.00E+000	9.17E-007	0.00E+000	0.00E+000	3.76E-005
Te131m	8.01E-016	0.00E+000	0.00E+000	0.00E+000	1.11E-001	0.00E+000	0.00E+000	5.33E-003
Te132	1.92E-010	0.00E+000	0.00E+000	0.00E+000	1.98E+000	0.00E+000	0.00E+000	8.03E-002
Ba137m	1.05E-014	0.00E+000	0.00E+000	0.00E+000	0.00E+000	0.00E+000	0.00E+000	0.00E+000
Ba139	2.07E-164	0.00E+000	0.00E+000	0.00E+000	6.13E-006	0.00E+000	0.00E+000	1.18E-004
Ba140	1.17E-008	0.00E+000	0.00E+000	0.00E+000	3.87E-003	0.00E+000	0.00E+000	1.53E-002
Mo99	4.69E-012	0.00E+000	0.00E+000	0.00E+000	2.96E-005	0.00E+000	0.00E+000	2.08E-003
Tc99m	4.65E-013	0.00E+000	0.00E+000	0.00E+000	5.56E-005	0.00E+000	0.00E+000	9.77E-006
Ru103	4.52E-009	0.00E+000	0.00E+000	0.00E+000	5.05E-004	0.00E+000	0.00E+000	4.76E-003
Ru105	1.77E-056	0.00E+000	0.00E+000	0.00E+000	2.99E-006	0.00E+000	0.00E+000	8.86E-005
Ru106	3.14E-009	0.00E+000	0.00E+000	0.00E+000	1.47E-003	0.00E+000	0.00E+000	1.10E-001
Rh105	8.65E-015	0.00E+000	0.00E+000	0.00E+000	4.81E-006	0.00E+000	0.00E+000	4.31E-004
Y90	1.17E-012	0.00E+000	0.00E+000	0.00E+000	3.26E-009	0.00E+000	0.00E+000	1.44E-005
Y91	2.09E-008	0.00E+000	0.00E+000	0.00E+000	1.63E-005	0.00E+000	0.00E+000	2.53E-002
Y92	7.70E-068	0.00E+000	0.00E+000	0.00E+000	2.31E-006	0.00E+000	0.00E+000	4.64E-004
Y93	1.43E-031	0.00E+000	0.00E+000	0.00E+000	7.63E-008	0.00E+000	0.00E+000	4.79E-005
Zr95	3.89E-010	0.00E+000	0.00E+000	0.00E+000	1.61E-004	0.00E+000	0.00E+000	8.78E-004
Zr97	1.04E-022	0.00E+000	0.00E+000	0.00E+000	2.65E-006	0.00E+000	0.00E+000	1.34E-004
Nb95	4.11E-010	0.00E+000	0.00E+000	0.00E+000	4.98E-005	0.00E+000	0.00E+000	2.19E-004
La140	1.77E-009	0.00E+000	0.00E+000	0.00E+000	1.87E-005	0.00E+000	0.00E+000	3.57E-004
La141	1.36E-065	0.00E+000	0.00E+000	0.00E+000	1.56E-007	0.00E+000	0.00E+000	9.71E-006
La142	7.76E-152	0.00E+000	0.00E+000	0.00E+000	1.23E-007	0.00E+000	0.00E+000	1.38E-006

Pr143	4.07E-010	0.00E+000	0.00E+000	0.00E+000	2.49E-013	0.00E+000	0.00E+000	3.25E-004
Nd147	3.44E-011	0.00E+000	0.00E+000	0.00E+000	1.00E-006	0.00E+000	0.00E+000	1.02E-004
Am241	9.72E-014	0.00E+000	0.00E+000	0.00E+000	4.01E-008	0.00E+000	0.00E+000	2.98E-003
Cm242	1.94E-011	0.00E+000	0.00E+000	0.00E+000	5.35E-006	0.00E+000	0.00E+000	2.61E-002
Cm244	1.78E-012	0.00E+000	0.00E+000	0.00E+000	4.65E-007	0.00E+000	0.00E+000	3.11E-002
Ce141	9.52E-010	0.00E+000	0.00E+000	0.00E+000	1.06E-005	0.00E+000	0.00E+000	1.00E-003
Ce143	2.10E-016	0.00E+000	0.00E+000	0.00E+000	1.85E-006	0.00E+000	0.00E+000	2.71E-004
Ce144	9.73E-010	0.00E+000	0.00E+000	0.00E+000	7.87E-005	0.00E+000	0.00E+000	2.72E-002
Np239	3.03E-012	0.00E+000	0.00E+000	0.00E+000	4.14E-005	0.00E+000	0.00E+000	3.69E-003
Pu238	3.07E-012	0.00E+000	0.00E+000	0.00E+000	7.63E-007	0.00E+000	0.00E+000	8.36E-002
Pu239	6.08E-013	0.00E+000	0.00E+000	0.00E+000	1.42E-007	0.00E+000	0.00E+000	1.82E-002
Pu240	1.00E-012	0.00E+000	0.00E+000	0.00E+000	2.34E-007	0.00E+000	0.00E+000	3.00E-002
Pu241	2.83E-010	0.00E+000	0.00E+000	0.00E+000	9.11E-007	0.00E+000	0.00E+000	1.64E-001
Sr89	1.73E-008	0.00E+000	0.00E+000	0.00E+000	2.80E-003	0.00E+000	0.00E+000	1.19E-002
Sr90	4.32E-009	0.00E+000	0.00E+000	0.00E+000	2.95E-003	0.00E+000	0.00E+000	7.23E-002
Sr91	7.94E-031	0.00E+000	0.00E+000	0.00E+000	2.46E-004	0.00E+000	0.00E+000	1.52E-003
Sr92	3.38E-090	0.00E+000	0.00E+000	0.00E+000	7.29E-005	0.00E+000	0.00E+000	5.66E-004

environment

	thyroid	wbody	skin	CEDE
EAB dose:	4.58E+001	1.46E+001	2.07E+001	2.24E+000
LPZ dose:	2.04E+001	2.11E+000	2.40E+000	8.62E-001

	thyrd_eab	wbody_eab	skin_eab	CEDE_eab	thyrd_lpz	wbody_lpz	skin_lpz	CEDE_lpz
Noble gas	0.00E+000	1.45E+001	2.06E+001	0.00E+000	0.00E+000	2.08E+000	2.38E+000	0.00E+000
Org iodine	2.65E+000	1.34E-002	7.64E-003	8.27E-002	2.73E+000	2.23E-003	1.23E-003	8.40E-002
Elem iodine	4.35E+000	5.23E-002	2.44E-002	1.36E-001	6.60E+000	6.54E-003	3.09E-003	2.03E-001
Part iodine	3.70E+001	9.13E-002	3.88E-002	1.16E+000	1.05E+001	2.55E-002	1.08E-002	3.30E-001
Cesium	3.37E-001	0.00E+000	0.00E+000	3.75E-001	9.60E-002	0.00E+000	0.00E+000	1.07E-001
Tellurium	1.44E+000	0.00E+000	0.00E+000	6.93E-002	4.11E-001	0.00E+000	0.00E+000	1.98E-002
Barium	2.61E-003	0.00E+000	0.00E+000	1.05E-002	7.47E-004	0.00E+000	0.00E+000	2.99E-003
Noble metal	1.40E-003	0.00E+000	0.00E+000	7.89E-002	4.00E-004	0.00E+000	0.00E+000	2.26E-002
Lanthanides	1.60E-004	0.00E+000	0.00E+000	4.58E-002	4.59E-005	0.00E+000	0.00E+000	1.33E-002
Cerium	9.06E-005	0.00E+000	0.00E+000	2.19E-001	2.59E-005	0.00E+000	0.00E+000	6.28E-002
Strontinum	4.13E-003	0.00E+000	0.00E+000	5.81E-002	1.18E-003	0.00E+000	0.00E+000	1.66E-002

	air_space	thyrd_eab	wbody_eab	skin_eab	CEDE_eab	thyrd_lpz	wbody_lpz	skin_lpz	CEDE_lpz
Kr83m	3.81E+003	0.00E+000	2.87E-006	0.00E+000	0.00E+000	0.00E+000	7.79E-007	0.00E+000	0.00E+000
Kr85m	2.85E+004	0.00E+000	1.57E-001	2.56E-001	0.00E+000	0.00E+000	3.88E-002	6.32E-002	0.00E+000
Kr85	1.50E+005	0.00E+000	1.30E-002	1.35E+000	0.00E+000	0.00E+000	7.97E-004	8.30E-002	0.00E+000
Kr87	7.52E+003	0.00E+000	1.97E-001	4.57E-001	0.00E+000	0.00E+000	5.45E-002	1.27E-001	0.00E+000
Kr88	3.88E+004	0.00E+000	2.58E+000	5.57E-001	0.00E+000	0.00E+000	6.74E-001	1.45E-001	0.00E+000
Kr89	7.37E+000	0.00E+000	4.02E-004	4.64E-004	0.00E+000	0.00E+000	1.12E-004	1.30E-004	0.00E+000
Xe131m	5.05E+004	0.00E+000	1.38E-002	1.82E-001	0.00E+000	0.00E+000	1.06E-003	1.39E-002	0.00E+000
Xe133m	8.08E+004	0.00E+000	8.06E-002	4.36E-001	0.00E+000	0.00E+000	1.09E-002	5.91E-002	0.00E+000

Xe133	7.87E+006	0.00E+000	8.86E+000	1.42E+001	0.00E+000	0.00E+000	7.87E-001	1.26E+000	0.00E+000
Xe135m	1.85E+002	0.00E+000	2.58E-003	6.66E-004	0.00E+000	0.00E+000	7.23E-004	1.86E-004	0.00E+000
Xe135	2.95E+005	0.00E+000	2.56E+000	3.19E+000	0.00E+000	0.00E+000	5.01E-001	6.24E-001	0.00E+000
Xe137	2.35E+001	0.00E+000	1.20E-004	1.94E-003	0.00E+000	0.00E+000	3.35E-005	5.44E-004	0.00E+000
Xe138	7.56E+002	0.00E+000	2.68E-002	2.04E-002	0.00E+000	0.00E+000	7.52E-003	5.70E-003	0.00E+000
I131Org	5.96E+002	2.00E+000	6.00E-003	3.22E-003	6.10E-002	2.40E+000	5.26E-004	2.82E-004	7.31E-002
I132Org	1.58E+001	5.63E-003	1.00E-003	3.11E-004	3.33E-004	1.66E-003	2.73E-004	8.44E-005	9.80E-005
I133Org	1.87E+002	5.72E-001	3.06E-003	3.03E-003	1.86E-002	3.00E-001	5.99E-004	5.91E-004	9.77E-003
I134Org	6.34E+000	4.22E-004	4.66E-004	1.59E-004	5.20E-005	1.18E-004	1.31E-004	4.45E-005	1.46E-005
I135Org	6.45E+001	6.93E-002	2.88E-003	9.27E-004	2.72E-003	2.54E-002	7.00E-004	2.25E-004	9.95E-004
I131Elem	1.72E+003	3.29E+000	1.73E-002	9.29E-003	1.00E-001	6.00E+000	1.33E-003	7.12E-004	1.83E-001
I132Elem	3.50E+002	1.50E-002	2.24E-002	6.93E-003	8.86E-004	1.15E-002	2.53E-003	7.83E-004	6.79E-004
I133Elem	3.78E+002	9.24E-001	6.19E-003	6.11E-003	3.00E-002	5.41E-001	1.08E-003	1.07E-003	1.76E-002
I134Elem	2.11E+001	1.41E-003	1.56E-003	5.31E-004	1.74E-004	3.96E-004	4.37E-004	1.49E-004	4.88E-005
I135Elem	1.09E+002	1.19E-001	4.89E-003	1.57E-003	4.69E-003	4.31E-002	1.17E-003	3.76E-004	1.69E-003
I131Part	4.20E+002	2.73E+001	4.22E-003	2.27E-003	8.30E-001	7.76E+000	1.17E-003	6.25E-004	2.36E-001
I132Part	3.63E+002	1.47E-001	2.32E-002	7.18E-003	8.68E-003	4.11E-002	6.48E-003	2.01E-003	2.43E-003
I133Part	7.66E+002	8.38E+000	1.25E-002	1.24E-002	2.72E-001	2.38E+000	3.48E-003	3.44E-003	7.72E-002
I134Part	3.20E+002	2.14E-002	2.36E-002	8.04E-003	2.64E-003	6.00E-003	6.61E-003	2.25E-003	7.40E-004
I135Part	6.22E+002	1.20E+000	2.78E-002	8.93E-003	4.72E-002	3.39E-001	7.75E-003	2.49E-003	1.33E-002
Rb86	5.96E-001	1.76E-004	0.00E+000	0.00E+000	2.38E-004	5.02E-005	0.00E+000	0.00E+000	6.76E-005
Cs134	8.42E+001	2.11E-001	0.00E+000	0.00E+000	2.37E-001	6.00E-002	0.00E+000	0.00E+000	6.76E-002
Cs136	1.85E+001	7.12E-003	0.00E+000	0.00E+000	8.15E-003	2.03E-003	0.00E+000	0.00E+000	2.32E-003
Cs137	6.78E+001	1.19E-001	0.00E+000	0.00E+000	1.30E-001	3.40E-002	0.00E+000	0.00E+000	3.70E-002
Sb127	8.18E+000	1.11E-004	0.00E+000	0.00E+000	2.94E-003	3.17E-005	0.00E+000	0.00E+000	8.39E-004
Sb129	1.67E+001	3.72E-005	0.00E+000	0.00E+000	6.65E-004	1.05E-005	0.00E+000	0.00E+000	1.87E-004
Te127m	1.18E+000	2.50E-005	0.00E+000	0.00E+000	1.50E-003	7.14E-006	0.00E+000	0.00E+000	4.30E-004
Te127	7.02E+000	2.91E-006	0.00E+000	0.00E+000	1.36E-004	8.24E-007	0.00E+000	0.00E+000	3.85E-005
Te129m	3.52E+000	1.20E-004	0.00E+000	0.00E+000	4.98E-003	3.43E-005	0.00E+000	0.00E+000	1.42E-003
Te129	8.97E+000	1.05E-006	0.00E+000	0.00E+000	4.31E-005	2.95E-007	0.00E+000	0.00E+000	1.21E-005
Te131m	9.96E+000	7.99E-002	0.00E+000	0.00E+000	3.83E-003	2.27E-002	0.00E+000	0.00E+000	1.09E-003
Te132	9.81E+001	1.36E+000	0.00E+000	0.00E+000	5.52E-002	3.88E-001	0.00E+000	0.00E+000	1.58E-002
Ba137m	1.27E-005	0.00E+000	0.00E+000	0.00E+000	0.00E+000	0.00E+000	0.00E+000	0.00E+000	0.00E+000
Ba139	1.88E+001	1.05E-005	0.00E+000	0.00E+000	2.02E-004	2.93E-006	0.00E+000	0.00E+000	5.67E-005
Ba140	4.64E+001	2.60E-003	0.00E+000	0.00E+000	1.03E-002	7.44E-004	0.00E+000	0.00E+000	2.94E-003
Mo99	6.08E+000	2.04E-005	0.00E+000	0.00E+000	1.44E-003	5.82E-006	0.00E+000	0.00E+000	4.10E-004
Tc99m	4.29E+000	4.87E-005	0.00E+000	0.00E+000	8.55E-006	1.38E-005	0.00E+000	0.00E+000	2.42E-006
Ru103	6.02E+000	3.38E-004	0.00E+000	0.00E+000	3.19E-003	9.68E-005	0.00E+000	0.00E+000	9.12E-004
Ru105	3.13E+000	2.97E-006	0.00E+000	0.00E+000	8.80E-005	8.36E-007	0.00E+000	0.00E+000	2.48E-005
Ru106	2.62E+000	9.85E-004	0.00E+000	0.00E+000	7.39E-002	2.82E-004	0.00E+000	0.00E+000	2.12E-002
Rh105	4.37E+000	2.72E-006	0.00E+000	0.00E+000	2.44E-004	7.84E-007	0.00E+000	0.00E+000	7.02E-005
Y90	1.97E-002	2.25E-009	0.00E+000	0.00E+000	9.92E-006	6.42E-010	0.00E+000	0.00E+000	2.83E-006
Y91	2.17E+000	2.63E-006	0.00E+000	0.00E+000	4.08E-003	8.80E-007	0.00E+000	0.00E+000	1.37E-003
Y92	2.53E+000	5.46E-007	0.00E+000	0.00E+000	1.10E-004	1.60E-007	0.00E+000	0.00E+000	3.22E-005
Y93	2.98E-001	6.23E-008	0.00E+000	0.00E+000	3.92E-005	1.76E-008	0.00E+000	0.00E+000	1.11E-005
Zr95	4.27E-001	1.08E-004	0.00E+000	0.00E+000	5.88E-004	3.09E-005	0.00E+000	0.00E+000	1.68E-004

Zr97	3.87E-001	2.00E-006	0.00E+000	0.00E+000	1.01E-004	5.68E-007	0.00E+000	0.00E+000	2.88E-005
Nb95	4.27E-001	3.33E-005	0.00E+000	0.00E+000	1.46E-004	9.54E-006	0.00E+000	0.00E+000	4.19E-005
La140	6.02E-001	7.95E-006	0.00E+000	0.00E+000	1.52E-004	2.36E-006	0.00E+000	0.00E+000	4.50E-005
La141	2.92E-001	1.64E-007	0.00E+000	0.00E+000	1.02E-005	4.61E-008	0.00E+000	0.00E+000	2.86E-006
La142	1.74E-001	1.99E-007	0.00E+000	0.00E+000	2.22E-006	5.56E-008	0.00E+000	0.00E+000	6.23E-007
Pr143	4.04E-001	1.43E-013	0.00E+000	0.00E+000	1.87E-004	4.14E-014	0.00E+000	0.00E+000	5.41E-005
Nd147	1.69E-001	6.76E-007	0.00E+000	0.00E+000	6.87E-005	1.93E-007	0.00E+000	0.00E+000	1.96E-005
Am241	7.69E-005	2.69E-008	0.00E+000	0.00E+000	2.00E-003	7.69E-009	0.00E+000	0.00E+000	5.71E-004
Cm242	1.74E-002	3.58E-006	0.00E+000	0.00E+000	1.75E-002	1.02E-006	0.00E+000	0.00E+000	5.00E-003
Cm244	1.41E-003	3.12E-007	0.00E+000	0.00E+000	2.08E-002	8.92E-008	0.00E+000	0.00E+000	5.96E-003
Ce141	1.17E+000	6.43E-006	0.00E+000	0.00E+000	6.10E-004	1.85E-006	0.00E+000	0.00E+000	1.75E-004
Ce143	9.54E-001	1.32E-006	0.00E+000	0.00E+000	1.94E-004	3.76E-007	0.00E+000	0.00E+000	5.53E-005
Ce144	8.26E-001	5.27E-005	0.00E+000	0.00E+000	1.82E-002	1.51E-005	0.00E+000	0.00E+000	5.21E-003
Np239	1.71E+001	2.88E-005	0.00E+000	0.00E+000	2.56E-003	8.21E-006	0.00E+000	0.00E+000	7.31E-004
Pu238	2.43E-003	5.11E-007	0.00E+000	0.00E+000	5.60E-002	1.46E-007	0.00E+000	0.00E+000	1.60E-002
Pu239	4.81E-004	9.47E-008	0.00E+000	0.00E+000	1.22E-002	2.71E-008	0.00E+000	0.00E+000	3.49E-003
Pu240	7.91E-004	1.56E-007	0.00E+000	0.00E+000	2.01E-002	4.47E-008	0.00E+000	0.00E+000	5.74E-003
Pu241	2.25E-001	6.09E-007	0.00E+000	0.00E+000	1.10E-001	1.74E-007	0.00E+000	0.00E+000	3.14E-002
Sr89	2.06E+001	1.88E-003	0.00E+000	0.00E+000	7.93E-003	5.37E-004	0.00E+000	0.00E+000	2.27E-003
Sr90	3.42E+000	1.97E-003	0.00E+000	0.00E+000	4.82E-002	5.63E-004	0.00E+000	0.00E+000	1.38E-002
Sr91	2.20E+001	2.03E-004	0.00E+000	0.00E+000	1.25E-003	5.74E-005	0.00E+000	0.00E+000	3.55E-004
Sr92	1.76E+001	8.92E-005	0.00E+000	0.00E+000	6.92E-004	2.50E-005	0.00E+000	0.00E+000	1.94E-004

STARDOSE 1.0 (c) 1996 Polestar Applied Technology, Inc.
08:56:01 AM October 13, 2001
Total elapsed hours: 00, mins: 04, secs: 34

Tables below were built from the STARDOSE outputs above (either one of them).

Airborne Activity in Primary Containment (on a per-isotope basis)

	LOCA - Activity Airborne in Primary Containment (Drywell + Wetwell)									
	0.1 hr	0.2 hr	0.5 hr	0.6 hr	1 hr	2 hr	4 hr	8 hr	1 day	30 days
Kr83m	8.19E+04	1.97E+05	4.92E+05	9.37E+05	3.02E+06	5.87E+06	2.84E+06	6.34E+05	1.58E+03	9.63E-111
Kr85m	1.72E+05	4.23E+05	1.13E+06	2.20E+06	7.71E+06	1.86E+07	1.39E+07	7.36E+06	5.85E+05	8.94E-43
Kr85	9.79E+03	2.44E+04	6.82E+04	1.35E+05	5.05E+05	1.43E+06	1.46E+06	1.46E+06	1.45E+06	1.30E+06
Kr87	3.02E+05	7.13E+05	1.69E+06	3.17E+06	9.53E+06	1.56E+07	5.33E+06	5.97E+05	9.37E+01	3.35E-164
Kr88	4.42E+05	1.07E+06	2.79E+06	5.38E+06	1.82E+07	4.03E+07	2.51E+07	9.30E+06	1.76E+05	2.16E-70
Kr89	1.42E+05	9.58E+04	5.31E+03	2.85E+03	5.71E+01	3.42E-04	1.56E-15	5.06E-29	9.44E-120	0.00E+00
Xe131m	6.65E+03	1.66E+04	4.63E+04	9.15E+04	3.42E+05	9.66E+05	9.81E+05	9.71E+05	9.30E+05	1.57E+05
Xe133m	3.95E+04	9.83E+04	2.74E+05	5.41E+05	2.01E+06	5.63E+06	5.60E+06	5.33E+06	4.33E+06	6.24E+02
Xe133	1.29E+06	3.23E+06	9.06E+06	1.79E+07	6.67E+07	1.88E+08	1.94E+08	1.95E+08	1.94E+08	4.49E+06
Xe135m	2.03E+05	3.87E+05	4.87E+05	7.38E+05	9.51E+05	1.88E+05	9.29E+02	2.19E-02	6.71E-21	0.00E+00
Xe135	3.14E+05	7.90E+05	2.28E+06	4.38E+06	1.58E+07	4.31E+07	4.49E+07	4.30E+07	2.18E+07	6.18E-16
Xe137	3.82E+05	3.28E+05	3.75E+04	2.56E+04	1.35E+03	8.99E-02	5.09E-11	1.59E-29	1.53E-103	0.00E+00
Xe138	6.70E+05	1.31E+06	1.75E+06	2.72E+06	3.82E+06	9.34E+05	7.13E+03	3.99E-01	3.87E-18	0.00E+00
I131Org	9.97E+02	2.48E+03	6.94E+03	9.09E+03	1.90E+04	4.36E+04	4.40E+04	4.33E+04	4.07E+04	3.03E+03
I132Org	1.37E+03	3.31E+03	8.46E+03	1.08E+04	2.00E+04	3.42E+04	1.92E+04	5.83E+03	4.95E+01	4.55E-89
I133Org	1.94E+03	4.81E+03	1.33E+04	1.74E+04	3.59E+04	8.01E+04	7.63E+04	6.67E+04	3.90E+04	3.27E-06
I134Org	1.99E+03	4.57E+03	1.01E+04	1.22E+04	1.84E+04	1.90E+04	3.89E+03	1.57E+02	4.12E-04	8.10E-247
I135Org	1.78E+03	4.39E+03	1.19E+04	1.54E+04	3.10E+04	6.44E+04	5.33E+04	3.53E+04	6.77E+03	4.61E-28
I131Elem	3.22E+04	8.03E+04	8.31E+04	9.81E+04	1.27E+05	1.29E+05	1.74E+04	4.27E+03	1.47E+01	1.49E+00
I132Elem	4.42E+04	1.07E+05	1.01E+05	1.16E+05	1.34E+05	1.02E+05	8.77E+03	1.11E+03	1.90E+00	3.16E-03
I133Elem	6.26E+04	1.56E+05	1.60E+05	1.88E+05	2.40E+05	2.36E+05	2.94E+04	6.10E+03	1.13E+01	9.44E-10
I134Elem	6.43E+04	1.48E+05	1.21E+05	1.31E+05	1.23E+05	5.62E+04	1.50E+03	1.43E+01	1.19E-07	2.34E-250
I135Elem	5.75E+04	1.42E+05	1.43E+05	1.67E+05	2.07E+05	1.90E+05	2.05E+04	3.22E+03	1.95E+00	1.33E-31
I131Part	6.31E+05	1.57E+06	1.63E+06	1.92E+06	2.48E+06	2.52E+06	3.32E+05	7.76E+04	2.31E+02	1.72E+01
I132Part	8.66E+05	2.09E+06	1.99E+06	2.28E+06	2.61E+06	1.98E+06	1.45E+05	1.04E+04	2.80E-01	2.58E-91
I133Part	1.23E+06	3.05E+06	3.13E+06	3.68E+06	4.69E+06	4.63E+06	5.76E+05	1.19E+05	2.21E+02	1.85E-08
I134Part	1.26E+06	2.90E+06	2.36E+06	2.57E+06	2.41E+06	1.10E+06	2.93E+04	2.81E+02	2.33E-06	4.59E-249
I135Part	1.13E+06	2.78E+06	2.79E+06	3.26E+06	4.05E+06	3.73E+06	4.03E+05	6.32E+04	3.83E+01	2.61E-30

Rb86	1.06E+03	2.65E+03	2.75E+03	2.95E+03	3.37E+03	3.40E+03	4.50E+02	1.06E+02	3.26E-01	1.00E-01
Cs134	1.49E+05	3.72E+05	3.86E+05	4.14E+05	4.73E+05	4.78E+05	6.35E+04	1.50E+04	4.74E+01	4.17E+01
Cs136	3.31E+04	8.25E+04	8.55E+04	9.17E+04	1.05E+05	1.06E+05	1.40E+04	3.28E+03	9.96E+00	1.92E+00
Cs137	1.20E+05	3.00E+05	3.11E+05	3.34E+05	3.81E+05	3.85E+05	5.12E+04	1.21E+04	3.81E+01	3.44E+01
Sb127	0.00E+00	0.00E+00	0.00E+00	2.12E+04	5.87E+04	6.17E+04	8.07E+03	1.86E+03	5.19E+00	2.62E-02
Sb129	0.00E+00	0.00E+00	0.00E+00	5.54E+04	1.45E+05	1.31E+05	1.26E+04	1.58E+03	3.90E-01	2.81E-49
Te127m	0.00E+00	0.00E+00	0.00E+00	3.00E+03	8.33E+03	8.81E+03	1.17E+03	2.77E+02	8.67E-01	6.47E-01
Te127	0.00E+00	0.00E+00	0.00E+00	2.04E+04	5.50E+04	5.41E+04	6.31E+03	1.16E+03	1.49E+00	2.92E-03
Te129m	0.00E+00	0.00E+00	0.00E+00	8.94E+03	2.48E+04	2.63E+04	3.48E+03	8.22E+02	2.55E+00	1.28E+00
Te129	0.00E+00	0.00E+00	0.00E+00	4.11E+04	9.34E+04	5.75E+04	5.19E+03	6.25E+02	1.53E-01	1.10E-49
Te131m	0.00E+00	0.00E+00	0.00E+00	2.66E+04	7.34E+04	7.59E+04	9.62E+03	2.08E+03	4.52E+00	4.21E-07
Te132	0.00E+00	0.00E+00	0.00E+00	2.55E+05	7.07E+05	7.42E+05	9.67E+04	2.21E+04	6.02E+01	1.01E-01
Ba137m	7.59E-03	3.17E-02	3.72E-02	4.77E-01	4.61E-02	4.50E-02	8.24E-03	1.95E-03	6.15E-06	5.54E-06
Ba139	0.00E+00	0.00E+00	0.00E+00	9.06E+04	2.06E+05	1.32E+05	6.46E+03	2.07E+02	2.17E-04	1.09E-155
Ba140	0.00E+00	0.00E+00	0.00E+00	1.19E+05	3.29E+05	3.48E+05	4.60E+04	1.08E+04	3.28E+01	6.15E+00
Mo99	0.00E+00	0.00E+00	0.00E+00	1.59E+04	4.39E+04	4.60E+04	5.98E+03	1.36E+03	3.62E+00	2.46E-03
Tc99m	0.00E+00	0.00E+00	0.00E+00	1.32E+04	3.51E+04	3.31E+04	3.61E+03	5.87E+02	5.88E-01	2.44E-04
Ru103	0.00E+00	0.00E+00	0.00E+00	1.53E+04	4.25E+04	4.49E+04	5.96E+03	1.41E+03	4.38E+00	2.38E+00
Ru105	0.00E+00	0.00E+00	0.00E+00	1.03E+04	2.69E+04	2.45E+04	2.40E+03	3.09E+02	8.56E-02	9.28E-48
Ru106	0.00E+00	0.00E+00	0.00E+00	6.64E+03	1.85E+04	1.95E+04	2.59E+03	6.14E+02	1.93E+00	1.65E+00
Rh105	0.00E+00	0.00E+00	0.00E+00	1.06E+04	2.96E+04	3.07E+04	4.74E+03	1.29E+03	3.69E+00	4.55E-06
Y90	0.00E+00	0.00E+00	0.00E+00	5.14E+01	1.42E+02	1.49E+02	1.93E+01	4.40E+00	1.18E-02	6.14E-04
Y91	0.00E+00	0.00E+00	0.00E+00	8.37E+02	3.62E+03	4.05E+03	3.54E+03	2.00E+03	1.38E+01	1.10E+01
Y92	0.00E+00	0.00E+00	0.00E+00	1.20E+03	7.60E+03	7.28E+03	6.56E+03	1.79E+03	5.82E-01	4.05E-59
Y93	0.00E+00	0.00E+00	0.00E+00	8.66E+02	2.34E+03	2.31E+03	2.67E+02	4.81E+01	5.05E-02	7.48E-23
Zr95	0.00E+00	0.00E+00	0.00E+00	1.08E+03	3.01E+03	3.18E+03	4.22E+02	9.98E+01	3.12E-01	2.05E-01
Zr97	0.00E+00	0.00E+00	0.00E+00	1.07E+03	2.93E+03	2.98E+03	3.64E+02	7.34E+01	1.21E-01	5.50E-14
Nb95	0.00E+00	0.00E+00	0.00E+00	1.08E+03	3.01E+03	3.18E+03	4.22E+02	9.98E+01	3.12E-01	2.17E-01
La140	0.00E+00	0.00E+00	0.00E+00	1.19E+03	3.36E+03	3.52E+03	6.53E+02	2.39E+02	1.63E+00	9.30E-01
La141	0.00E+00	0.00E+00	0.00E+00	9.93E+02	2.57E+03	2.28E+03	2.12E+02	2.46E+01	4.51E-03	7.15E-57
La142	0.00E+00	0.00E+00	0.00E+00	8.05E+02	1.87E+03	1.25E+03	6.72E+01	2.60E+00	5.76E-06	4.04E-143
Pr143	0.00E+00	0.00E+00	0.00E+00	9.59E+02	2.68E+03	2.83E+03	4.15E+02	1.16E+02	5.34E-01	2.15E-01
Nd147	0.00E+00	0.00E+00	0.00E+00	4.33E+02	1.20E+03	1.27E+03	1.68E+02	3.93E+01	1.19E-01	1.81E-02
Am241	0.00E+00	0.00E+00	0.00E+00	1.94E-01	5.40E-01	5.72E-01	7.60E-02	1.80E-02	5.67E-05	5.11E-05
Cm242	0.00E+00	0.00E+00	0.00E+00	4.41E+01	1.23E+02	1.30E+02	1.72E+01	4.07E+00	1.28E-02	1.02E-02

Cm244	0.00E+00	0.00E+00	0.00E+00	3.57E+00	9.93E+00	1.05E+01	1.40E+00	3.31E-01	1.04E-03	9.37E-04
Ce141	0.00E+00	0.00E+00	0.00E+00	2.85E+03	7.98E+03	8.44E+03	1.21E+03	3.10E+02	1.04E+00	5.00E-01
Ce143	0.00E+00	0.00E+00	0.00E+00	2.55E+03	7.02E+03	7.27E+03	9.24E+02	2.00E+02	4.46E-01	1.11E-07
Ce144	0.00E+00	0.00E+00	0.00E+00	2.09E+03	5.81E+03	6.15E+03	8.17E+02	1.93E+02	6.08E-01	5.12E-01
Np239	0.00E+00	0.00E+00	0.00E+00	4.48E+04	1.24E+05	1.29E+05	1.68E+04	3.78E+03	9.76E+00	1.59E-03
Pu238	0.00E+00	0.00E+00	0.00E+00	6.15E+00	1.71E+01	1.81E+01	2.40E+00	5.69E-01	1.79E-03	1.62E-03
Pu239	0.00E+00	0.00E+00	0.00E+00	1.22E+00	3.38E+00	3.58E+00	4.75E-01	1.13E-01	3.55E-04	3.20E-04
Pu240	0.00E+00	0.00E+00	0.00E+00	2.00E+00	5.56E+00	5.89E+00	7.81E-01	1.85E-01	5.83E-04	5.26E-04
Pu241	0.00E+00	0.00E+00	0.00E+00	5.69E+02	1.58E+03	1.67E+03	2.22E+02	5.27E+01	1.66E-01	1.49E-01
Sr89	0.00E+00	0.00E+00	0.00E+00	5.24E+04	1.45E+05	1.54E+05	2.04E+04	4.82E+03	1.51E+01	9.13E+00
Sr90	0.00E+00	0.00E+00	0.00E+00	8.66E+03	2.41E+04	2.55E+04	3.38E+03	8.01E+02	2.52E+00	2.27E+00
Sr91	0.00E+00	0.00E+00	0.00E+00	6.43E+04	1.74E+05	1.71E+05	1.96E+04	3.48E+03	3.45E+00	4.18E-22
Sr92	0.00E+00	0.00E+00	0.00E+00	6.67E+04	1.67E+05	1.36E+05	1.07E+04	8.84E+02	4.19E-02	1.78E-81

Airborne Activity in Secondary Containment (on a per-isotope basis)

	LOCA - Activity Airborne in Secondary Containmnent									
	0.1 hr	0.2 hr	0.5 hr	0.6 hr	1 hr	2 hr	4 hr	8 hr	1 day	30 days
Kr83m	0.00E+00	1.21E+00	2.13E+01	3.34E+01	1.80E+02	8.57E+02	1.22E+03	4.69E+02	1.51E+00	4.69E-114
Kr85m	0.00E+00	2.61E+00	4.89E+01	7.83E+01	4.61E+02	2.72E+03	5.98E+03	5.45E+03	5.61E+02	4.40E-46
Kr85	0.00E+00	1.51E-01	2.96E+00	4.81E+00	3.02E+01	2.09E+02	6.29E+02	1.08E+03	1.39E+03	6.30E+02
Kr87	0.00E+00	4.40E+00	7.34E+01	1.13E+02	5.69E+02	2.28E+03	2.30E+03	4.42E+02	8.99E-02	1.63E-167
Kr88	0.00E+00	6.63E+00	1.21E+02	1.92E+02	1.09E+03	5.88E+03	1.08E+04	6.88E+03	1.69E+02	1.05E-73
Kr89	0.00E+00	5.91E-01	2.30E-01	1.01E-01	3.41E-03	4.99E-08	6.71E-19	3.01E-32	9.15E-123	6.77E-322
Xe131m	0.00E+00	1.02E-01	2.01E+00	3.26E+00	2.04E+01	1.41E+02	4.23E+02	7.19E+02	8.92E+02	7.61E+01
Xe133m	0.00E+00	6.07E-01	1.19E+01	1.93E+01	1.20E+02	8.22E+02	2.42E+03	3.94E+03	4.16E+03	3.01E-01
Xe133	0.00E+00	1.99E+01	3.94E+02	6.42E+02	4.00E+03	2.76E+04	8.34E+04	1.45E+05	1.95E+05	2.79E+03
Xe135m	0.00E+00	2.39E+00	2.11E+01	2.63E+01	5.68E+01	2.74E+01	4.01E-01	1.62E-05	6.44E-24	3.33E-321
Xe135	0.00E+00	4.89E+00	1.03E+02	1.68E+02	9.92E+02	6.51E+03	1.92E+04	3.20E+04	2.52E+04	5.72E-19
Xe137	0.00E+00	2.02E+00	1.63E+00	9.11E-01	8.05E-02	1.31E-05	2.20E-14	1.18E-32	1.47E-106	5.14E-322
Xe138	0.00E+00	8.06E+00	7.60E+01	9.68E+01	2.28E+02	1.36E+02	3.07E+00	2.95E-04	3.72E-21	3.50E-321
I131Org	0.00E+00	1.53E-02	5.91E-01	9.24E-01	3.24E+00	1.52E+01	4.15E+01	6.87E+01	8.33E+01	4.85E+00
I132Org	0.00E+00	2.04E-02	7.21E-01	1.09E+00	3.41E+00	1.19E+01	1.81E+01	9.23E+00	1.01E-01	7.29E-92
I133Org	0.00E+00	2.97E-02	1.14E+00	1.77E+00	6.13E+00	2.80E+01	7.19E+01	1.06E+02	7.98E+01	5.22E-09
I134Org	0.00E+00	2.82E-02	8.57E-01	1.24E+00	3.15E+00	6.65E+00	3.67E+00	2.49E-01	8.42E-07	1.30E-249
I135Org	0.00E+00	2.71E-02	1.01E+00	1.57E+00	5.28E+00	2.25E+01	5.03E+01	5.60E+01	1.38E+01	7.40E-31
I131Elem	0.00E+00	4.96E-01	1.54E+01	2.28E+01	7.12E+01	2.97E+02	7.46E+02	1.20E+03	1.43E+03	1.09E+02
I132Elem	0.00E+00	6.60E-01	1.87E+01	2.70E+01	7.50E+01	2.34E+02	3.27E+02	1.63E+02	1.84E+00	1.53E-06
I133Elem	0.00E+00	9.61E-01	2.95E+01	4.36E+01	1.35E+02	5.46E+02	1.29E+03	1.84E+03	1.37E+03	1.18E-07
I134Elem	0.00E+00	9.13E-01	2.23E+01	3.05E+01	6.92E+01	1.30E+02	6.58E+01	4.32E+00	1.44E-05	2.92E-248
I135Elem	0.00E+00	8.76E-01	2.64E+01	3.87E+01	1.16E+02	4.39E+02	9.02E+02	9.74E+02	2.37E+02	1.66E-29
I131Part	0.00E+00	9.71E+00	1.17E+02	1.50E+02	3.22E+02	7.29E+02	6.77E+02	3.70E+02	1.44E+01	2.97E-02
I132Part	0.00E+00	1.29E+01	1.43E+02	1.78E+02	3.39E+02	5.72E+02	2.95E+02	4.96E+01	1.75E-02	4.48E-94
I133Part	0.00E+00	1.88E+01	2.25E+02	2.88E+02	6.09E+02	1.34E+03	1.17E+03	5.69E+02	1.38E+01	3.20E-11
I134Part	0.00E+00	1.79E+01	1.70E+02	2.01E+02	3.13E+02	3.19E+02	5.99E+01	1.34E+00	1.45E-07	7.97E-252
I135Part	0.00E+00	1.72E+01	2.01E+02	2.55E+02	5.25E+02	1.08E+03	8.21E+02	3.01E+02	2.39E+00	4.52E-33
Rb86	0.00E+00	1.64E-02	1.98E-01	2.51E-01	4.89E-01	1.03E+00	9.47E-01	5.17E-01	2.03E-02	4.85E-05

Cs134	0.00E+00	2.30E+00	2.78E+01	3.53E+01	6.87E+01	1.45E+02	1.34E+02	7.34E+01	2.95E+00	2.02E-02
Cs136	0.00E+00	5.09E-01	6.15E+00	7.81E+00	1.52E+01	3.20E+01	2.94E+01	1.60E+01	6.21E-01	9.28E-04
Cs137	0.00E+00	1.85E+00	2.24E+01	2.84E+01	5.53E+01	1.17E+02	1.08E+02	5.91E+01	2.38E+00	1.66E-02
Sb127	0.00E+00	0.00E+00	0.00E+00	1.57E-01	3.92E+00	1.46E+01	1.44E+01	7.98E+00	2.93E-01	1.27E-05
Sb129	0.00E+00	0.00E+00	0.00E+00	4.11E-01	9.64E+00	3.09E+01	2.24E+01	6.79E+00	2.21E-02	1.36E-52
Te127m	0.00E+00	0.00E+00	0.00E+00	2.22E-02	5.55E-01	2.09E+00	2.08E+00	1.19E+00	4.91E-02	3.13E-04
Te127	0.00E+00	0.00E+00	0.00E+00	1.51E-01	3.67E+00	1.29E+01	1.13E+01	4.99E+00	8.46E-02	1.41E-06
Te129m	0.00E+00	0.00E+00	0.00E+00	6.63E-02	1.66E+00	6.21E+00	6.20E+00	3.53E+00	1.44E-01	6.17E-04
Te129	0.00E+00	0.00E+00	0.00E+00	3.06E-01	6.43E+00	1.60E+01	9.77E+00	2.71E+00	8.64E-03	5.35E-53
Te131m	0.00E+00	0.00E+00	0.00E+00	1.98E-01	4.89E+00	1.80E+01	1.71E+01	8.94E+00	2.56E-01	2.04E-10
Te132	0.00E+00	0.00E+00	0.00E+00	1.89E+00	4.71E+01	1.75E+02	1.72E+02	9.50E+01	3.40E+00	4.88E-05
Ba137m	0.00E+00	2.12E-07	3.44E-06	7.66E-06	8.82E-06	1.86E-05	1.73E-05	9.52E-06	3.83E-07	2.68E-09
Ba139	0.00E+00	0.00E+00	0.00E+00	6.73E-01	1.37E+01	3.13E+01	1.15E+01	8.89E-01	1.23E-05	5.28E-159
Ba140	0.00E+00	0.00E+00	0.00E+00	8.80E-01	2.20E+01	8.23E+01	8.18E+01	4.64E+01	1.85E+00	2.97E-03
Mo99	0.00E+00	0.00E+00	0.00E+00	1.18E-01	2.93E+00	1.09E+01	1.06E+01	5.84E+00	2.05E-01	1.19E-06
Tc99m	0.00E+00	0.00E+00	0.00E+00	9.79E-02	2.34E+00	7.90E+00	6.46E+00	2.53E+00	3.33E-02	1.18E-07
Ru103	0.00E+00	0.00E+00	0.00E+00	1.14E-01	2.83E+00	1.06E+01	1.06E+01	6.05E+00	2.48E-01	1.15E-03
Ru105	0.00E+00	0.00E+00	0.00E+00	7.63E-02	1.79E+00	5.79E+00	4.26E+00	1.33E+00	4.84E-03	4.49E-51
Ru106	0.00E+00	0.00E+00	0.00E+00	4.93E-02	1.23E+00	4.62E+00	4.62E+00	2.64E+00	1.09E-01	7.97E-04
Rh105	0.00E+00	0.00E+00	0.00E+00	7.86E-02	2.01E+00	7.85E+00	8.82E+00	5.68E+00	2.12E-01	2.20E-09
Y90	0.00E+00	0.00E+00	0.00E+00	3.81E-04	9.48E-03	3.52E-02	3.45E-02	1.89E-02	6.66E-04	2.97E-07
Y91	0.00E+00	0.00E+00	0.00E+00	6.65E-03	3.65E-01	2.83E+00	7.57E+00	9.16E+00	7.94E-01	5.32E-03
Y92	0.00E+00	0.00E+00	0.00E+00	1.06E-02	9.38E-01	7.10E+00	1.42E+01	8.19E+00	3.36E-02	1.96E-62
Y93	0.00E+00	0.00E+00	0.00E+00	6.42E-03	1.56E-01	5.47E-01	4.76E-01	2.07E-01	2.85E-03	3.63E-26
Zr95	0.00E+00	0.00E+00	0.00E+00	8.03E-03	2.00E-01	7.52E-01	7.51E-01	4.29E-01	1.76E-02	9.90E-05
Zr97	0.00E+00	0.00E+00	0.00E+00	7.95E-03	1.95E-01	7.04E-01	6.48E-01	3.15E-01	6.81E-03	2.66E-17
Nb95	0.00E+00	0.00E+00	0.00E+00	8.03E-03	2.00E-01	7.52E-01	7.51E-01	4.29E-01	1.77E-02	1.05E-04
La140	0.00E+00	0.00E+00	0.00E+00	8.85E-03	2.31E-01	9.45E-01	1.24E+00	1.06E+00	9.26E-02	4.50E-04
La141	0.00E+00	0.00E+00	0.00E+00	7.37E-03	1.71E-01	5.39E-01	3.77E-01	1.06E-01	2.55E-04	3.47E-60
La142	0.00E+00	0.00E+00	0.00E+00	5.97E-03	1.24E-01	2.97E-01	1.20E-01	1.12E-02	3.26E-07	1.97E-146
Pr143	0.00E+00	0.00E+00	0.00E+00	7.12E-03	1.80E-01	6.93E-01	7.54E-01	5.03E-01	3.04E-02	1.04E-04
Nd147	0.00E+00	0.00E+00	0.00E+00	3.21E-03	8.01E-02	3.00E-01	2.98E-01	1.69E-01	6.71E-03	8.75E-06
Am241	0.00E+00	0.00E+00	0.00E+00	1.44E-06	3.60E-05	1.35E-04	1.35E-04	7.73E-05	3.20E-06	2.47E-08
Cm242	0.00E+00	0.00E+00	0.00E+00	3.27E-04	8.17E-03	3.07E-02	3.06E-02	1.75E-02	7.23E-04	4.93E-06

Cm244	0.00E+00	0.00E+00	0.00E+00	2.65E-05	6.62E-04	2.49E-03	2.48E-03	1.42E-03	5.89E-05	4.53E-07
Ce141	0.00E+00	0.00E+00	0.00E+00	2.12E-02	5.36E-01	2.06E+00	2.19E+00	1.35E+00	5.91E-02	2.42E-04
Ce143	0.00E+00	0.00E+00	0.00E+00	1.89E-02	4.68E-01	1.72E+00	1.64E+00	8.63E-01	2.52E-02	5.34E-11
Ce144	0.00E+00	0.00E+00	0.00E+00	1.55E-02	3.87E-01	1.45E+00	1.45E+00	8.31E-01	3.44E-02	2.47E-04
Np239	0.00E+00	0.00E+00	0.00E+00	3.32E-01	8.25E+00	3.06E+01	2.98E+01	1.63E+01	5.52E-01	7.69E-07
Pu238	0.00E+00	0.00E+00	0.00E+00	4.56E-05	1.14E-03	4.28E-03	4.28E-03	2.45E-03	1.01E-04	7.81E-07
Pu239	0.00E+00	0.00E+00	0.00E+00	9.02E-06	2.25E-04	8.46E-04	8.45E-04	4.84E-04	2.00E-05	1.55E-07
Pu240	0.00E+00	0.00E+00	0.00E+00	1.48E-05	3.71E-04	1.39E-03	1.39E-03	7.96E-04	3.30E-05	2.54E-07
Pu241	0.00E+00	0.00E+00	0.00E+00	4.23E-03	1.05E-01	3.96E-01	3.96E-01	2.27E-01	9.38E-03	7.21E-05
Sr89	0.00E+00	0.00E+00	0.00E+00	3.89E-01	9.70E+00	3.64E+01	3.63E+01	2.07E+01	8.51E-01	4.41E-03
Sr90	0.00E+00	0.00E+00	0.00E+00	6.43E-02	1.60E+00	6.03E+00	6.02E+00	3.45E+00	1.43E-01	1.10E-03
Sr91	0.00E+00	0.00E+00	0.00E+00	4.77E-01	1.16E+01	4.04E+01	3.50E+01	1.50E+01	1.95E-01	2.02E-25
Sr92	0.00E+00	0.00E+00	0.00E+00	4.95E-01	1.11E+01	3.21E+01	1.90E+01	3.80E+00	2.36E-03	8.59E-85

Released Activity to the Environment (on a per-isotope basis)

	LOCA - Activity Release to the Environment									
	0.1 hr	0.2 hr	0.5 hr	0.6 hr	1 hr	2 hr	4 hr	8 hr	1 day	30 days
Kr83m	9.53E-01	4.55E+00	1.95E+01	2.90E+01	1.48E+02	8.92E+02	2.14E+03	3.37E+03	3.81E+03	3.81E+03
Kr85m	1.99E+00	9.65E+00	4.30E+01	6.50E+01	3.58E+02	2.51E+03	7.40E+03	1.62E+04	2.78E+04	2.85E+04
Kr85	1.13E-01	5.51E-01	2.53E+00	3.87E+00	2.26E+01	1.77E+02	6.19E+02	1.88E+03	8.42E+03	1.50E+05
Kr87	3.53E+00	1.67E+01	6.93E+01	1.02E+02	4.88E+02	2.63E+03	5.46E+03	7.24E+03	7.52E+03	7.52E+03
Kr88	5.12E+00	2.46E+01	1.08E+02	1.62E+02	8.65E+02	5.70E+03	1.54E+04	2.88E+04	3.87E+04	3.88E+04
Kr89	2.24E+00	5.84E+00	7.27E+00	7.32E+00	7.37E+00	7.37E+00	7.37E+00	7.37E+00	7.37E+00	7.37E+00
Xe131m	7.66E-02	3.74E-01	1.71E+00	2.63E+00	1.53E+01	1.20E+02	4.17E+02	1.26E+03	5.53E+03	5.05E+04
Xe133m	4.56E-01	2.22E+00	1.02E+01	1.56E+01	9.04E+01	7.02E+02	2.42E+03	7.16E+03	2.87E+04	8.08E+04
Xe133	1.49E+01	7.29E+01	3.36E+02	5.14E+02	2.99E+03	2.34E+04	8.18E+04	2.51E+05	1.14E+06	7.87E+06
Xe135m	2.48E+00	1.05E+01	3.06E+01	3.89E+01	9.53E+01	1.76E+02	1.85E+02	1.85E+02	1.85E+02	1.85E+02
Xe135	3.61E+00	1.78E+01	8.47E+01	1.30E+02	7.31E+02	5.53E+03	1.92E+04	5.79E+04	2.14E+05	2.95E+05
Xe137	5.67E+00	1.63E+01	2.25E+01	2.29E+01	2.34E+01	2.35E+01	2.35E+01	2.35E+01	2.35E+01	2.35E+01
Xe138	8.16E+00	3.49E+01	1.05E+02	1.36E+02	3.53E+02	7.03E+02	7.55E+02	7.56E+02	7.56E+02	7.56E+02
I131Org	1.15E-02	5.60E-02	2.48E-01	3.56E-01	1.12E+00	5.41E+00	1.34E+01	2.94E+01	9.28E+01	5.96E+02
I132Org	1.59E-02	7.60E-02	3.20E-01	4.49E-01	1.30E+00	5.13E+00	9.86E+00	1.40E+01	1.58E+01	1.58E+01
I133Org	2.24E-02	1.09E-01	4.80E-01	6.86E-01	2.14E+00	1.01E+01	2.43E+01	5.05E+01	1.28E+02	1.87E+02
I134Org	2.33E-02	1.09E-01	4.18E-01	5.68E-01	1.43E+00	4.15E+00	5.90E+00	6.32E+00	6.34E+00	6.34E+00
I135Org	2.06E-02	9.96E-02	4.34E-01	6.18E-01	1.89E+00	8.51E+00	1.92E+01	3.52E+01	6.12E+01	6.45E+01
I131Elem	3.09E-01	1.42E+00	3.57E+00	4.26E+00	8.02E+00	1.88E+01	2.75E+01	4.82E+01	1.53E+02	1.72E+03
I132Elem	4.27E-01	1.93E+00	4.67E+00	5.51E+00	9.70E+00	1.97E+01	2.60E+01	3.69E+01	7.76E+01	3.50E+02
I133Elem	6.01E-01	2.76E+00	6.90E+00	8.24E+00	1.54E+01	3.55E+01	5.02E+01	8.15E+01	1.99E+02	3.78E+02
I134Elem	6.28E-01	2.77E+00	6.30E+00	7.26E+00	1.15E+01	1.87E+01	2.06E+01	2.11E+01	2.11E+01	2.11E+01
I135Elem	5.53E-01	2.53E+00	6.27E+00	7.45E+00	1.37E+01	3.04E+01	4.16E+01	6.06E+01	9.94E+01	1.09E+02
I131Part	5.76E+00	2.60E+01	6.05E+01	7.16E+01	1.31E+02	2.95E+02	3.61E+02	4.01E+02	4.18E+02	4.20E+02
I132Part	7.95E+00	3.54E+01	7.93E+01	9.27E+01	1.59E+02	3.08E+02	3.51E+02	3.62E+02	3.63E+02	3.63E+02
I133Part	1.12E+01	5.06E+01	1.17E+02	1.38E+02	2.52E+02	5.57E+02	6.76E+02	7.42E+02	7.66E+02	7.66E+02
I134Part	1.17E+01	5.07E+01	1.07E+02	1.23E+02	1.91E+02	3.00E+02	3.18E+02	3.20E+02	3.20E+02	3.20E+02
I135Part	1.03E+01	4.63E+01	1.06E+02	1.25E+02	2.24E+02	4.78E+02	5.70E+02	6.11E+02	6.22E+02	6.22E+02
Rb86	9.71E-03	4.39E-02	1.02E-01	1.20E-01	2.04E-01	4.25E-01	5.14E-01	5.69E-01	5.93E-01	5.96E-01

Cs134	1.36E+00	6.16E+00	1.43E+01	1.69E+01	2.86E+01	5.96E+01	7.23E+01	8.00E+01	8.34E+01	8.42E+01
Cs136	3.02E-01	1.37E+00	3.17E+00	3.73E+00	6.33E+00	1.32E+01	1.60E+01	1.77E+01	1.84E+01	1.85E+01
Cs137	1.10E+00	4.96E+00	1.15E+01	1.36E+01	2.30E+01	4.80E+01	5.82E+01	6.44E+01	6.72E+01	6.78E+01
Sb127	0.00E+00	0.00E+00	0.00E+00	4.87E-02	1.26E+00	5.23E+00	6.82E+00	7.76E+00	8.16E+00	8.18E+00
Sb129	0.00E+00	0.00E+00	0.00E+00	1.28E-01	3.19E+00	1.23E+01	1.53E+01	1.65E+01	1.67E+01	1.67E+01
Te127m	0.00E+00	0.00E+00	0.00E+00	6.88E-03	1.78E-01	7.44E-01	9.72E-01	1.11E+00	1.17E+00	1.18E+00
Te127	0.00E+00	0.00E+00	0.00E+00	4.68E-02	1.19E+00	4.79E+00	6.13E+00	6.81E+00	7.01E+00	7.02E+00
Te129m	0.00E+00	0.00E+00	0.00E+00	2.05E-02	5.31E-01	2.22E+00	2.90E+00	3.31E+00	3.48E+00	3.52E+00
Te129	0.00E+00	0.00E+00	0.00E+00	9.53E-02	2.20E+00	7.10E+00	8.41E+00	8.88E+00	8.97E+00	8.97E+00
Te131m	0.00E+00	0.00E+00	0.00E+00	6.12E-02	1.58E+00	6.50E+00	8.44E+00	9.53E+00	9.95E+00	9.96E+00
Te132	0.00E+00	0.00E+00	0.00E+00	5.86E-01	1.51E+01	6.29E+01	8.21E+01	9.33E+01	9.79E+01	9.81E+01
Ba137m	5.01E-08	3.81E-07	1.17E-06	2.93E-06	6.66E-06	9.60E-06	1.12E-05	1.22E-05	1.26E-05	1.27E-05
Ba139	0.00E+00	0.00E+00	0.00E+00	2.10E-01	4.85E+00	1.58E+01	1.84E+01	1.88E+01	1.88E+01	1.88E+01
Ba140	0.00E+00	0.00E+00	0.00E+00	2.72E-01	7.05E+00	2.94E+01	3.84E+01	4.38E+01	4.61E+01	4.64E+01
Mo99	0.00E+00	0.00E+00	0.00E+00	3.64E-02	9.40E-01	3.90E+00	5.09E+00	5.78E+00	6.06E+00	6.08E+00
Tc99m	0.00E+00	0.00E+00	0.00E+00	3.04E-02	7.66E-01	3.02E+00	3.82E+00	4.19E+00	4.29E+00	4.29E+00
Ru103	0.00E+00	0.00E+00	0.00E+00	3.51E-02	9.09E-01	3.79E+00	4.96E+00	5.66E+00	5.96E+00	6.02E+00
Ru105	0.00E+00	0.00E+00	0.00E+00	2.37E-02	5.92E-01	2.28E+00	2.86E+00	3.08E+00	3.13E+00	3.13E+00
Ru106	0.00E+00	0.00E+00	0.00E+00	1.52E-02	3.95E-01	1.65E+00	2.15E+00	2.46E+00	2.59E+00	2.62E+00
Rh105	0.00E+00	0.00E+00	0.00E+00	2.42E-02	6.32E-01	2.62E+00	3.47E+00	4.07E+00	4.36E+00	4.37E+00
Y90	0.00E+00	0.00E+00	0.00E+00	1.18E-04	3.05E-03	1.26E-02	1.65E-02	1.87E-02	1.96E-02	1.97E-02
Y91	0.00E+00	0.00E+00	0.00E+00	1.81E-03	6.75E-02	3.31E-01	6.53E-01	1.33E+00	1.92E+00	2.17E+00
Y92	0.00E+00	0.00E+00	0.00E+00	2.35E-03	1.32E-01	6.57E-01	1.32E+00	2.24E+00	2.53E+00	2.53E+00
Y93	0.00E+00	0.00E+00	0.00E+00	1.99E-03	5.07E-02	2.04E-01	2.62E-01	2.90E-01	2.98E-01	2.98E-01
Zr95	0.00E+00	0.00E+00	0.00E+00	2.48E-03	6.43E-02	2.68E-01	3.51E-01	4.00E-01	4.22E-01	4.27E-01
Zr97	0.00E+00	0.00E+00	0.00E+00	2.46E-03	6.31E-02	2.58E-01	3.33E-01	3.73E-01	3.87E-01	3.87E-01
Nb95	0.00E+00	0.00E+00	0.00E+00	2.48E-03	6.43E-02	2.68E-01	3.51E-01	4.00E-01	4.22E-01	4.27E-01
La140	0.00E+00	0.00E+00	0.00E+00	2.73E-03	7.15E-02	2.99E-01	4.03E-01	4.98E-01	5.64E-01	6.02E-01
La141	0.00E+00	0.00E+00	0.00E+00	2.29E-03	5.68E-02	2.17E-01	2.69E-01	2.88E-01	2.92E-01	2.92E-01
La142	0.00E+00	0.00E+00	0.00E+00	1.87E-03	4.35E-02	1.45E-01	1.70E-01	1.74E-01	1.74E-01	1.74E-01
Pr143	0.00E+00	0.00E+00	0.00E+00	2.20E-03	5.72E-02	2.39E-01	3.15E-01	3.68E-01	3.96E-01	4.04E-01
Nd147	0.00E+00	0.00E+00	0.00E+00	9.93E-04	2.57E-02	1.07E-01	1.40E-01	1.60E-01	1.68E-01	1.69E-01
Am241	0.00E+00	0.00E+00	0.00E+00	4.46E-07	1.16E-05	4.82E-05	6.31E-05	7.20E-05	7.59E-05	7.69E-05
Cm242	0.00E+00	0.00E+00	0.00E+00	1.01E-04	2.62E-03	1.09E-02	1.43E-02	1.63E-02	1.72E-02	1.74E-02

Cm244	0.00E+00	0.00E+00	0.00E+00	8.20E-06	2.12E-04	8.87E-04	1.16E-03	1.32E-03	1.40E-03	1.41E-03
Ce141	0.00E+00	0.00E+00	0.00E+00	6.55E-03	1.70E-01	7.12E-01	9.37E-01	1.09E+00	1.15E+00	1.17E+00
Ce143	0.00E+00	0.00E+00	0.00E+00	5.85E-03	1.51E-01	6.22E-01	8.08E-01	9.13E-01	9.53E-01	9.54E-01
Ce144	0.00E+00	0.00E+00	0.00E+00	4.80E-03	1.24E-01	5.19E-01	6.78E-01	7.74E-01	8.16E-01	8.26E-01
Np239	0.00E+00	0.00E+00	0.00E+00	1.03E-01	2.65E+00	1.10E+01	1.43E+01	1.63E+01	1.71E+01	1.71E+01
Pu238	0.00E+00	0.00E+00	0.00E+00	1.41E-05	3.66E-04	1.53E-03	2.00E-03	2.28E-03	2.40E-03	2.43E-03
Pu239	0.00E+00	0.00E+00	0.00E+00	2.79E-06	7.23E-05	3.02E-04	3.95E-04	4.50E-04	4.75E-04	4.81E-04
Pu240	0.00E+00	0.00E+00	0.00E+00	4.59E-06	1.19E-04	4.96E-04	6.49E-04	7.41E-04	7.81E-04	7.91E-04
Pu241	0.00E+00	0.00E+00	0.00E+00	1.31E-03	3.38E-02	1.41E-01	1.85E-01	2.11E-01	2.22E-01	2.25E-01
Sr89	0.00E+00	0.00E+00	0.00E+00	1.20E-01	3.11E+00	1.30E+01	1.70E+01	1.94E+01	2.04E+01	2.06E+01
Sr90	0.00E+00	0.00E+00	0.00E+00	1.99E-02	5.15E-01	2.15E+00	2.81E+00	3.21E+00	3.38E+00	3.42E+00
Sr91	0.00E+00	0.00E+00	0.00E+00	1.48E-01	3.76E+00	1.51E+01	1.94E+01	2.14E+01	2.20E+01	2.20E+01
Sr92	0.00E+00	0.00E+00	0.00E+00	1.54E-01	3.75E+00	1.37E+01	1.67E+01	1.75E+01	1.76E+01	1.76E+01

Planned FSAR Input from Calculation Output

Tables below were built from the Activity Tables above (on a per-isotope basis), using group definitions as follows:

Noble Gases	Kr, Xe
Halogens	I
Alkali Metals	Rb, Cs
Te Group	Sb, Te, Ba, Sr
Noble Metals	Mo, Tc, Ru, Rh
La Group	Y, Zr, Nb, La, Pr, Nd, Am, Cm
Ce Group	Ce, Np, Pu

Airborne Activity in Primary Containment (on a per-group basis)

	LOCA - Activity Airborne in Primary Containment (Drywell + Wetwell)									
	0.1 hr	0.2 hr	0.5 hr	0.6 hr	1 hr	2 hr	4 hr	8 hr	1 day	30 days
Noble Gases	4.05E+06	8.68E+06	2.01E+07	3.82E+07	1.29E+08	3.21E+08	2.94E+08	2.63E+08	2.24E+08	5.95E+06
Halogens	5.39E+06	1.30E+07	1.26E+07	1.45E+07	1.72E+07	1.49E+07	1.76E+06	4.37E+05	8.70E+04	3.05E+03
Alkali Metals	3.03E+05	7.57E+05	7.85E+05	8.43E+05	9.62E+05	9.72E+05	1.29E+05	3.05E+04	9.58E+01	7.81E+01
Te Group	7.59E-03	3.17E-02	3.72E-02	8.33E+05	2.21E+06	2.12E+06	2.50E+05	5.15E+04	1.29E+02	1.96E+01
Noble Metals	0.00E+00	0.00E+00	0.00E+00	7.19E+04	1.97E+05	1.99E+05	2.53E+04	5.56E+03	1.43E+01	4.03E+00
La Group	0.00E+00	0.00E+00	0.00E+00	1.06E+04	3.45E+04	3.44E+04	1.31E+04	4.54E+03	1.74E+01	1.26E+01
Ce Group	0.00E+00	0.00E+00	0.00E+00	5.29E+04	1.46E+05	1.53E+05	1.99E+04	4.54E+03	1.20E+01	1.17E+00

Airborne Activity in Secondary Containment (on a per-group basis)

	LOCA - Activity Airborne in Secondary Containmnent									
	0.1 hr	0.2 hr	0.5 hr	0.6 hr	1 hr	2 hr	4 hr	8 hr	1 day	30 days
Noble Gases	0.00E+00	5.36E+01	8.77E+02	1.38E+03	7.75E+03	4.72E+04	1.26E+05	1.96E+05	2.27E+05	3.50E+03
Halogens	0.00E+00	8.05E+01	9.73E+02	1.24E+03	2.60E+03	5.77E+03	6.54E+03	5.71E+03	3.25E+03	1.14E+02
Alkali Metals	0.00E+00	4.68E+00	5.65E+01	7.18E+01	1.40E+02	2.95E+02	2.72E+02	1.49E+02	5.97E+00	3.78E-02
Te Group	0.00E+00	2.12E-07	3.44E-06	6.18E+00	1.48E+02	5.04E+02	4.45E+02	2.21E+02	7.30E+00	9.47E-03
Noble Metals	0.00E+00	0.00E+00	0.00E+00	5.34E-01	1.31E+01	4.77E+01	4.54E+01	2.41E+01	8.12E-01	1.95E-03
La Group	0.00E+00	0.00E+00	0.00E+00	8.09E-02	2.86E+00	1.55E+01	2.73E+01	2.06E+01	1.00E+00	6.09E-03
Ce Group	0.00E+00	0.00E+00	0.00E+00	3.92E-01	9.75E+00	3.62E+01	3.55E+01	1.96E+01	6.80E-01	5.63E-04

Released Activity to the Environment (on a per-group basis)

	LOCA - Activity Release to the Environment									
	0.1 hr	0.2 hr	0.5 hr	0.6 hr	1 hr	2 hr	4 hr	8 hr	1 day	30 days
Noble Gases	4.93E+01	2.17E+02	8.40E+02	1.23E+03	6.19E+03	4.26E+04	1.36E+05	3.76E+05	1.48E+06	8.53E+06
Halogens	4.95E+01	2.21E+02	4.99E+02	5.86E+02	1.02E+03	2.09E+03	2.51E+03	2.82E+03	3.34E+03	5.94E+03
Alkali Metals	2.77E+00	1.25E+01	2.91E+01	3.44E+01	5.81E+01	1.21E+02	1.47E+02	1.63E+02	1.70E+02	1.71E+02
Te Group	5.01E-08	3.81E-07	1.17E-06	1.92E+00	4.83E+01	1.91E+02	2.44E+02	2.71E+02	2.82E+02	2.82E+02
Noble Metals	0.00E+00	0.00E+00	0.00E+00	1.65E-01	4.23E+00	1.73E+01	2.24E+01	2.52E+01	2.64E+01	2.65E+01
La Group	0.00E+00	0.00E+00	0.00E+00	2.39E-02	7.02E-01	3.02E+00	4.60E+00	6.56E+00	7.61E+00	7.92E+00
Ce Group	0.00E+00	0.00E+00	0.00E+00	1.22E-01	3.13E+00	1.30E+01	1.69E+01	1.93E+01	2.02E+01	2.03E+01

APPENDIX D

STARDOSE "RESULT.OUT" FILE
EAB DOSE

A spreadsheet was used to calculate the maximum EAB TEDE over 2-hour time frames. Note that the STARDOSE edit times were chosen knowing that the maximum 2-hour EAB dose would be obtained during the first few hours into the event, during the bulk of the release phase.

Edit Time	Thyroid	Wbody	Skin	CEDE	TEDE	2-hour Time Frame	EAB
0	0.00	0.00	0.00	0.00	0.00	0.0 - 2.0	2.19
0.1	0.61	0.00	0.00	0.03	0.03	0.1 - 2.1	2.28
0.2	2.70	0.01	0.01	0.12	0.13	0.2 - 2.2	2.27
0.3	3.93	0.02	0.01	0.17	0.19	0.3 - 2.3	2.29
0.4	5.10	0.03	0.02	0.22	0.25	0.4 - 2.4	2.30
0.5	6.19	0.04	0.02	0.27	0.30	0.5 - 2.5	2.31
0.6	7.33	0.05	0.03	0.32	0.36	0.6 - 2.6	2.32
0.7	8.73	0.06	0.04	0.38	0.45	0.7 - 2.7	2.29
0.8	10.30	0.08	0.05	0.46	0.55	0.8 - 2.8	2.26
0.9	11.90	0.11	0.07	0.55	0.66	0.9 - 2.9	2.22
1	13.60	0.14	0.09	0.63	0.77	1.0 - 3.0	2.16
1.1	15.30	0.17	0.11	0.72	0.90	1.1 - 3.1	2.10
1.2	17.00	0.21	0.14	0.81	1.02	1.2 - 3.2	2.04
1.3	18.80	0.26	0.17	0.90	1.16	1.3 - 3.3	1.95
1.4	20.50	0.30	0.20	0.99	1.29	1.4 - 3.4	1.89
1.5	22.30	0.35	0.23	1.08	1.43	1.5 - 3.5	1.81
1.6	24.00	0.40	0.27	1.18	1.58	1.6 - 3.6	1.71
1.7	25.80	0.46	0.30	1.27	1.73	1.7 - 3.7	1.63
1.8	27.50	0.52	0.34	1.36	1.88	1.8 - 3.8	1.53
1.9	29.30	0.58	0.39	1.45	2.03	1.9 - 3.9	1.44
2	31.00	0.65	0.43	1.54	2.19	2.0 - 4.0	1.34
2.1	32.40	0.71	0.47	1.61	2.32		
2.2	33.20	0.75	0.50	1.65	2.40		
2.3	33.70	0.80	0.53	1.68	2.48		
2.4	34.20	0.85	0.56	1.70	2.55		
2.44	34.30	0.87	0.57	1.71	2.58		
2.5	34.50	0.90	0.59	1.72	2.62		
2.6	34.90	0.94	0.62	1.74	2.68		
2.7	35.20	0.99	0.66	1.75	2.74		
2.8	35.50	1.04	0.69	1.77	2.81		
2.9	35.80	1.08	0.72	1.79	2.87		
3	36.10	1.13	0.75	1.80	2.93		
3.1	36.40	1.18	0.78	1.82	3.00		
3.2	36.70	1.23	0.81	1.83	3.06		
3.3	37.00	1.27	0.84	1.84	3.11		
3.4	37.30	1.32	0.88	1.86	3.18		

3.5	37.60	1.37	0.91	1.87	3.24
3.6	37.80	1.41	0.94	1.88	3.29
3.7	38.10	1.46	0.97	1.90	3.36
3.8	38.40	1.50	1.00	1.91	3.41
3.9	38.60	1.55	1.03	1.92	3.47
4	38.80	1.60	1.06	1.93	3.53
6	42.80	2.43	1.65	2.11	4.54
8	45.80	3.12	2.21	2.24	5.36
24	45.80	6.24	5.95	2.24	8.48
96	45.80	9.47	11.10	2.24	11.71
720	45.80	14.60	20.70	2.24	16.84

STARDOSE 1 (c) 1996 Polestar Applied Technology, Inc.
8:45:14 AM October 13, 2001

edit	time	0			
		thyroid	wbody	skin	CEDE
EAB	dose:	0.00E+00	0.00E+00	0.00E+00	0.00E+00
LPZ	dose:	0.00E+00	0.00E+00	0.00E+00	0.00E+00
edit	time	0.1			
		thyroid	wbody	skin	CEDE
EAB	dose:	6.09E-01	3.19E-03	2.09E-03	2.84E-02
LPZ	dose:	1.70E-01	8.93E-04	5.85E-04	7.96E-03
edit	time	0.2			
		thyroid	wbody	skin	CEDE
EAB	dose:	2.70E+00	1.39E-02	8.36E-03	1.18E-01
LPZ	dose:	7.56E-01	3.90E-03	2.34E-03	3.30E-02
edit	time	0.3			
		thyroid	wbody	skin	CEDE
EAB	dose:	3.93E+00	2.10E-02	1.24E-02	1.70E-01
LPZ	dose:	1.10E+00	5.89E-03	3.47E-03	4.76E-02
edit	time	0.4			
		thyroid	wbody	skin	CEDE
EAB	dose:	5.10E+00	2.87E-02	1.68E-02	2.19E-01
LPZ	dose:	1.43E+00	8.03E-03	4.71E-03	6.13E-02
edit	time	0.5			
		thyroid	wbody	skin	CEDE
EAB	dose:	6.19E+00	3.68E-02	2.16E-02	2.65E-01
LPZ	dose:	1.73E+00	1.03E-02	6.06E-03	7.41E-02
edit	time	0.6			
		thyroid	wbody	skin	CEDE
EAB	dose:	7.33E+00	4.67E-02	2.78E-02	3.15E-01
LPZ	dose:	2.05E+00	1.31E-02	7.78E-03	8.82E-02
edit	time	0.7			
		thyroid	wbody	skin	CEDE
EAB	dose:	8.73E+00	6.25E-02	3.79E-02	3.83E-01

LPZ	dose:	2.45E+00	1.75E-02	1.06E-02	1.07E-01
edit	time	0.8			
		thyroid	wbody	skin	CEDE
EAB	dose:	1.03E+01	8.35E-02	5.17E-02	4.62E-01
LPZ	dose:	2.88E+00	2.34E-02	1.45E-02	1.29E-01
edit	time	0.9			
		thyroid	wbody	skin	CEDE
EAB	dose:	1.19E+01	1.09E-01	6.89E-02	5.46E-01
LPZ	dose:	3.34E+00	3.06E-02	1.93E-02	1.53E-01
edit	time	1			
		thyroid	wbody	skin	CEDE
EAB	dose:	1.36E+01	1.40E-01	8.91E-02	6.33E-01
LPZ	dose:	3.81E+00	3.91E-02	2.49E-02	1.77E-01
edit	time	1.1			
		thyroid	wbody	skin	CEDE
EAB	dose:	1.53E+01	1.74E-01	1.12E-01	7.22E-01
LPZ	dose:	4.29E+00	4.87E-02	3.14E-02	2.02E-01
edit	time	1.2			
		thyroid	wbody	skin	CEDE
EAB	dose:	1.70E+01	2.12E-01	1.38E-01	8.12E-01
LPZ	dose:	4.77E+00	5.94E-02	3.86E-02	2.27E-01
edit	time	1.3			
		thyroid	wbody	skin	CEDE
EAB	dose:	1.88E+01	2.55E-01	1.66E-01	9.03E-01
LPZ	dose:	5.25E+00	7.13E-02	4.66E-02	2.53E-01
edit	time	1.4			
		thyroid	wbody	skin	CEDE
EAB	dose:	2.05E+01	3.00E-01	1.97E-01	9.93E-01
LPZ	dose:	5.74E+00	8.41E-02	5.52E-02	2.78E-01
edit	time	1.5			
		thyroid	wbody	skin	CEDE
EAB	dose:	2.23E+01	3.50E-01	2.30E-01	1.08E+00
LPZ	dose:	6.23E+00	9.80E-02	6.45E-02	3.04E-01
edit	time	1.6			
		thyroid	wbody	skin	CEDE
EAB	dose:	2.40E+01	4.03E-01	2.66E-01	1.18E+00
LPZ	dose:	6.72E+00	1.13E-01	7.44E-02	3.29E-01
edit	time	1.7			
		thyroid	wbody	skin	CEDE
EAB	dose:	2.58E+01	4.59E-01	3.04E-01	1.27E+00
LPZ	dose:	7.21E+00	1.29E-01	8.50E-02	3.55E-01
edit	time	1.8			
		thyroid	wbody	skin	CEDE
EAB	dose:	2.75E+01	5.19E-01	3.43E-01	1.36E+00
LPZ	dose:	7.70E+00	1.45E-01	9.61E-02	3.80E-01

edit	time	1.9			
		thyroid	wbody	skin	CEDE
EAB	dose:	2.93E+01	5.82E-01	3.85E-01	1.45E+00
LPZ	dose:	8.20E+00	1.63E-01	1.08E-01	4.06E-01
edit	time	2			
		thyroid	wbody	skin	CEDE
EAB	dose:	3.10E+01	6.48E-01	4.29E-01	1.54E+00
LPZ	dose:	8.69E+00	1.82E-01	1.20E-01	4.32E-01
edit	time	2.1			
		thyroid	wbody	skin	CEDE
EAB	dose:	3.24E+01	7.05E-01	4.67E-01	1.61E+00
LPZ	dose:	9.07E+00	1.97E-01	1.31E-01	4.51E-01
edit	time	2.2			
		thyroid	wbody	skin	CEDE
EAB	dose:	3.32E+01	7.53E-01	4.98E-01	1.65E+00
LPZ	dose:	9.29E+00	2.11E-01	1.40E-01	4.63E-01
edit	time	2.3			
		thyroid	wbody	skin	CEDE
EAB	dose:	3.37E+01	8.00E-01	5.30E-01	1.68E+00
LPZ	dose:	9.45E+00	2.24E-01	1.48E-01	4.71E-01
edit	time	2.4			
		thyroid	wbody	skin	CEDE
EAB	dose:	3.42E+01	8.48E-01	5.61E-01	1.70E+00
LPZ	dose:	9.57E+00	2.37E-01	1.57E-01	4.77E-01
edit	time	2.44			
		thyroid	wbody	skin	CEDE
EAB	dose:	3.43E+01	8.67E-01	5.74E-01	1.71E+00
LPZ	dose:	9.61E+00	2.43E-01	1.61E-01	4.79E-01
edit	time	2.5			
		thyroid	wbody	skin	CEDE
EAB	dose:	3.45E+01	8.95E-01	5.93E-01	1.72E+00
LPZ	dose:	9.67E+00	2.51E-01	1.66E-01	4.82E-01
edit	time	2.6			
		thyroid	wbody	skin	CEDE
EAB	dose:	3.49E+01	9.42E-01	6.24E-01	1.74E+00
LPZ	dose:	9.76E+00	2.64E-01	1.75E-01	4.87E-01
edit	time	2.7			
		thyroid	wbody	skin	CEDE
EAB	dose:	3.52E+01	9.90E-01	6.56E-01	1.75E+00
LPZ	dose:	9.85E+00	2.77E-01	1.84E-01	4.91E-01
edit	time	2.8			
		thyroid	wbody	skin	CEDE
EAB	dose:	3.55E+01	1.04E+00	6.87E-01	1.77E+00
LPZ	dose:	9.94E+00	2.90E-01	1.92E-01	4.96E-01

edit	time	2.9			
		thyroid	wbody	skin	CEDE
EAB	dose:	3.58E+01	1.08E+00	7.19E-01	1.79E+00
LPZ	dose:	1.00E+01	3.04E-01	2.01E-01	5.00E-01
edit	time	3			
		thyroid	wbody	skin	CEDE
EAB	dose:	3.61E+01	1.13E+00	7.50E-01	1.80E+00
LPZ	dose:	1.01E+01	3.17E-01	2.10E-01	5.04E-01
edit	time	3.1			
		thyroid	wbody	skin	CEDE
EAB	dose:	3.64E+01	1.18E+00	7.82E-01	1.82E+00
LPZ	dose:	1.02E+01	3.30E-01	2.19E-01	5.08E-01
edit	time	3.2			
		thyroid	wbody	skin	CEDE
EAB	dose:	3.67E+01	1.23E+00	8.13E-01	1.83E+00
LPZ	dose:	1.03E+01	3.43E-01	2.28E-01	5.12E-01
edit	time	3.3			
		thyroid	wbody	skin	CEDE
EAB	dose:	3.70E+01	1.27E+00	8.44E-01	1.84E+00
LPZ	dose:	1.04E+01	3.57E-01	2.36E-01	5.16E-01
edit	time	3.4			
		thyroid	wbody	skin	CEDE
EAB	dose:	3.73E+01	1.32E+00	8.75E-01	1.86E+00
LPZ	dose:	1.04E+01	3.70E-01	2.45E-01	5.20E-01
edit	time	3.5			
		thyroid	wbody	skin	CEDE
EAB	dose:	3.76E+01	1.37E+00	9.06E-01	1.87E+00
LPZ	dose:	1.05E+01	3.83E-01	2.54E-01	5.24E-01
edit	time	3.6			
		thyroid	wbody	skin	CEDE
EAB	dose:	3.78E+01	1.41E+00	9.37E-01	1.88E+00
LPZ	dose:	1.06E+01	3.96E-01	2.62E-01	5.27E-01
edit	time	3.7			
		thyroid	wbody	skin	CEDE
EAB	dose:	3.81E+01	1.46E+00	9.68E-01	1.90E+00
LPZ	dose:	1.07E+01	4.09E-01	2.71E-01	5.31E-01
edit	time	3.8			
		thyroid	wbody	skin	CEDE
EAB	dose:	3.84E+01	1.50E+00	9.99E-01	1.91E+00
LPZ	dose:	1.07E+01	4.21E-01	2.80E-01	5.34E-01
edit	time	3.9			
		thyroid	wbody	skin	CEDE
EAB	dose:	3.86E+01	1.55E+00	1.03E+00	1.92E+00
LPZ	dose:	1.08E+01	4.34E-01	2.88E-01	5.37E-01
edit	time	4			

		thyroid	wbody	skin	CEDE
EAB	dose:	3.88E+01	1.60E+00	1.06E+00	1.93E+00
LPZ	dose:	1.09E+01	4.47E-01	2.97E-01	5.41E-01

edit time 6

		thyroid	wbody	skin	CEDE
EAB	dose:	4.28E+01	2.43E+00	1.65E+00	2.11E+00
LPZ	dose:	1.20E+01	6.80E-01	4.62E-01	5.92E-01

edit time 8

		thyroid	wbody	skin	CEDE
EAB	dose:	4.58E+01	3.12E+00	2.21E+00	2.24E+00
LPZ	dose:	1.28E+01	8.75E-01	6.18E-01	6.26E-01

edit time 24

		thyroid	wbody	skin	CEDE
EAB	dose:	4.58E+01	6.24E+00	5.95E+00	2.24E+00
LPZ	dose:	1.45E+01	1.52E+00	1.40E+00	6.81E-01

edit time 96

		thyroid	wbody	skin	CEDE
EAB	dose:	4.58E+01	9.47E+00	1.11E+01	2.24E+00
LPZ	dose:	1.73E+01	1.88E+00	1.97E+00	7.69E-01

edit time 720

		thyroid	wbody	skin	CEDE
EAB	dose:	4.58E+01	1.46E+01	2.07E+01	2.24E+00
LPZ	dose:	2.04E+01	2.11E+00	2.40E+00	8.62E-01

STARDOSE 1 (c) 1996 Polestar Applied Technology, Inc.
8:49:50 AM October 13, 2001
Total elapsed hours: 00, mins: 04, secs: 36

APPENDIX E

STARDOSE "RESULT.OUT" FILE
EDIT TIME WHEN 98% OF THE CONTAINMENT ACTIVITY HAS BEEN REMOVED

Cs-137, a long live isotope with a half life of about 30 years, was chosen as a tracer of when 98% of the activity in containment will have been removed, so as to determine the moment when the spray removal lambda would need to be reduced by a factor of 10, according to Reference 7.

According to Table 1-1 and 3-1 of the main body of the calculation, the Cs-137 activity released into containment over a 2-hour release period is 3556 MWt x 5.05E3 Ci / MWt x 25% = 4.49E6 Ci

Consequently, 2% of this initial activity remaining airborne would correspond to 8.98E4 Ci

Provided below is the STARDOSE output file 2.44-hour edit time showing airborne activity in the DW and in the WW. Adding up the two activity values, one ends up with 5.09E4 + 3.88E4 = 8.97E4 Ci, which is indeed 2% of the initial Cs-137 activity released into containment.

```
edit time 2.440000
DW
```

	thyroid	wbody	skin	CEDE
Total dose:	0.00E+000	0.00E+000	0.00E+000	0.00E+000
Noble gas	0.00E+000	0.00E+000	0.00E+000	0.00E+000
Org iodine	0.00E+000	0.00E+000	0.00E+000	0.00E+000
Elem iodine	0.00E+000	0.00E+000	0.00E+000	0.00E+000
Part iodine	0.00E+000	0.00E+000	0.00E+000	0.00E+000
Cesium	0.00E+000	0.00E+000	0.00E+000	0.00E+000
Tellurium	0.00E+000	0.00E+000	0.00E+000	0.00E+000
Barium	0.00E+000	0.00E+000	0.00E+000	0.00E+000
Noble metal	0.00E+000	0.00E+000	0.00E+000	0.00E+000
Lanthanides	0.00E+000	0.00E+000	0.00E+000	0.00E+000
Cerium	0.00E+000	0.00E+000	0.00E+000	0.00E+000
Strontinum	0.00E+000	0.00E+000	0.00E+000	0.00E+000

	air_space	water_pool	surface	recirc	thyroid	wbody	skin	CEDE
Kr83m	2.96E+006	0.00E+000	0.00E+000	0.00E+000	0.00E+000	0.00E+000	0.00E+000	0.00E+000

Kr85m	1.03E+007	0.00E+000	0.00E+000	0.00E+000	0.00E+000	0.00E+000	0.00E+000	0.00E+000
Kr85	8.49E+005	0.00E+000	0.00E+000	0.00E+000	0.00E+000	0.00E+000	0.00E+000	0.00E+000
Kr87	7.29E+006	0.00E+000	0.00E+000	0.00E+000	0.00E+000	0.00E+000	0.00E+000	0.00E+000
Kr88	2.15E+007	0.00E+000	0.00E+000	0.00E+000	0.00E+000	0.00E+000	0.00E+000	0.00E+000
Kr89	6.46E-007	0.00E+000	0.00E+000	0.00E+000	0.00E+000	0.00E+000	0.00E+000	0.00E+000
Xe131m	5.73E+005	0.00E+000	0.00E+000	0.00E+000	0.00E+000	0.00E+000	0.00E+000	0.00E+000
Xe133m	3.33E+006	0.00E+000	0.00E+000	0.00E+000	0.00E+000	0.00E+000	0.00E+000	0.00E+000
Xe133	1.12E+008	0.00E+000	0.00E+000	0.00E+000	0.00E+000	0.00E+000	0.00E+000	0.00E+000
Xe135m	3.45E+004	0.00E+000	0.00E+000	0.00E+000	0.00E+000	0.00E+000	0.00E+000	0.00E+000
Xe135	2.58E+007	0.00E+000	0.00E+000	0.00E+000	0.00E+000	0.00E+000	0.00E+000	0.00E+000
Xe137	4.91E-004	0.00E+000	0.00E+000	0.00E+000	0.00E+000	0.00E+000	0.00E+000	0.00E+000
Xe138	1.89E+005	0.00E+000	0.00E+000	0.00E+000	0.00E+000	0.00E+000	0.00E+000	0.00E+000
I131Org	2.58E+004	0.00E+000	0.00E+000	0.00E+000	0.00E+000	0.00E+000	0.00E+000	0.00E+000
I132Org	1.78E+004	0.00E+000	0.00E+000	0.00E+000	0.00E+000	0.00E+000	0.00E+000	0.00E+000
I133Org	4.68E+004	0.00E+000	0.00E+000	0.00E+000	0.00E+000	0.00E+000	0.00E+000	0.00E+000
I134Org	7.93E+003	0.00E+000	0.00E+000	0.00E+000	0.00E+000	0.00E+000	0.00E+000	0.00E+000
I135Org	3.65E+004	0.00E+000	0.00E+000	0.00E+000	0.00E+000	0.00E+000	0.00E+000	0.00E+000
I131Elem	1.71E+004	0.00E+000	1.42E+006	0.00E+000	0.00E+000	0.00E+000	0.00E+000	0.00E+000
I132Elem	1.21E+004	0.00E+000	1.03E+006	0.00E+000	0.00E+000	0.00E+000	0.00E+000	0.00E+000
I133Elem	3.08E+004	0.00E+000	2.55E+006	0.00E+000	0.00E+000	0.00E+000	0.00E+000	0.00E+000
I134Elem	5.22E+003	0.00E+000	4.32E+005	0.00E+000	0.00E+000	0.00E+000	0.00E+000	0.00E+000
I135Elem	2.40E+004	0.00E+000	1.99E+006	0.00E+000	0.00E+000	0.00E+000	0.00E+000	0.00E+000
I131Part	3.32E+005	0.00E+000	2.75E+007	0.00E+000	0.00E+000	0.00E+000	0.00E+000	0.00E+000
I132Part	2.29E+005	0.00E+000	1.89E+007	0.00E+000	0.00E+000	0.00E+000	0.00E+000	0.00E+000
I133Part	6.03E+005	0.00E+000	4.99E+007	0.00E+000	0.00E+000	0.00E+000	0.00E+000	0.00E+000
I134Part	1.02E+005	0.00E+000	8.45E+006	0.00E+000	0.00E+000	0.00E+000	0.00E+000	0.00E+000
I135Part	4.70E+005	0.00E+000	3.89E+007	0.00E+000	0.00E+000	0.00E+000	0.00E+000	0.00E+000
Rb86	4.48E+002	0.00E+000	3.87E+004	0.00E+000	0.00E+000	0.00E+000	0.00E+000	0.00E+000
Cs134	6.31E+004	0.00E+000	5.45E+006	0.00E+000	0.00E+000	0.00E+000	0.00E+000	0.00E+000
Cs136	1.39E+004	0.00E+000	1.20E+006	0.00E+000	0.00E+000	0.00E+000	0.00E+000	0.00E+000
Cs137	5.09E+004	0.00E+000	4.39E+006	0.00E+000	0.00E+000	0.00E+000	0.00E+000	0.00E+000
Sb127	8.12E+003	0.00E+000	5.58E+005	0.00E+000	0.00E+000	0.00E+000	0.00E+000	0.00E+000
Sb129	1.61E+004	0.00E+000	1.10E+006	0.00E+000	0.00E+000	0.00E+000	0.00E+000	0.00E+000
Te127m	1.16E+003	0.00E+000	7.99E+004	0.00E+000	0.00E+000	0.00E+000	0.00E+000	0.00E+000
Te127	6.93E+003	0.00E+000	4.79E+005	0.00E+000	0.00E+000	0.00E+000	0.00E+000	0.00E+000
Te129m	3.47E+003	0.00E+000	2.38E+005	0.00E+000	0.00E+000	0.00E+000	0.00E+000	0.00E+000
Te129	6.89E+003	0.00E+000	5.44E+005	0.00E+000	0.00E+000	0.00E+000	0.00E+000	0.00E+000
Te131m	9.92E+003	0.00E+000	6.81E+005	0.00E+000	0.00E+000	0.00E+000	0.00E+000	0.00E+000
Te132	9.75E+004	0.00E+000	6.70E+006	0.00E+000	0.00E+000	0.00E+000	0.00E+000	0.00E+000
Ba137m	8.19E-003	0.00E+000	7.07E-001	0.00E+000	0.00E+000	0.00E+000	0.00E+000	0.00E+000
Ba139	1.40E+004	0.00E+000	9.63E+005	0.00E+000	0.00E+000	0.00E+000	0.00E+000	0.00E+000
Ba140	4.59E+004	0.00E+000	3.15E+006	0.00E+000	0.00E+000	0.00E+000	0.00E+000	0.00E+000
Mo99	6.04E+003	0.00E+000	4.15E+005	0.00E+000	0.00E+000	0.00E+000	0.00E+000	0.00E+000
Tc99m	4.18E+003	0.00E+000	2.90E+005	0.00E+000	0.00E+000	0.00E+000	0.00E+000	0.00E+000
Ru103	5.93E+003	0.00E+000	4.07E+005	0.00E+000	0.00E+000	0.00E+000	0.00E+000	0.00E+000
Ru105	3.02E+003	0.00E+000	2.07E+005	0.00E+000	0.00E+000	0.00E+000	0.00E+000	0.00E+000

Ru106	2.58E+003	0.00E+000	1.77E+005	0.00E+000	0.00E+000	0.00E+000	0.00E+000	0.00E+000
Rh105	4.21E+003	0.00E+000	3.11E+005	0.00E+000	0.00E+000	0.00E+000	0.00E+000	0.00E+000
Y90	1.96E+001	0.00E+000	1.34E+003	0.00E+000	0.00E+000	0.00E+000	0.00E+000	0.00E+000
Y91	1.19E+003	0.00E+000	1.52E+005	0.00E+000	0.00E+000	0.00E+000	0.00E+000	0.00E+000
Y92	2.61E+003	0.00E+000	3.66E+005	0.00E+000	0.00E+000	0.00E+000	0.00E+000	0.00E+000
Y93	2.96E+002	0.00E+000	2.03E+004	0.00E+000	0.00E+000	0.00E+000	0.00E+000	0.00E+000
Zr95	4.20E+002	0.00E+000	2.88E+004	0.00E+000	0.00E+000	0.00E+000	0.00E+000	0.00E+000
Zr97	3.86E+002	0.00E+000	2.65E+004	0.00E+000	0.00E+000	0.00E+000	0.00E+000	0.00E+000
Nb95	4.20E+002	0.00E+000	2.88E+004	0.00E+000	0.00E+000	0.00E+000	0.00E+000	0.00E+000
La140	5.03E+002	0.00E+000	3.88E+004	0.00E+000	0.00E+000	0.00E+000	0.00E+000	0.00E+000
La141	2.78E+002	0.00E+000	1.91E+004	0.00E+000	0.00E+000	0.00E+000	0.00E+000	0.00E+000
La142	1.36E+002	0.00E+000	9.32E+003	0.00E+000	0.00E+000	0.00E+000	0.00E+000	0.00E+000
Pr143	3.82E+002	0.00E+000	2.71E+004	0.00E+000	0.00E+000	0.00E+000	0.00E+000	0.00E+000
Nd147	1.67E+002	0.00E+000	1.15E+004	0.00E+000	0.00E+000	0.00E+000	0.00E+000	0.00E+000
Am241	7.55E-002	0.00E+000	5.19E+000	0.00E+000	0.00E+000	0.00E+000	0.00E+000	0.00E+000
Cm242	1.71E+001	0.00E+000	1.18E+003	0.00E+000	0.00E+000	0.00E+000	0.00E+000	0.00E+000
Cm244	1.39E+000	0.00E+000	9.53E+001	0.00E+000	0.00E+000	0.00E+000	0.00E+000	0.00E+000
Ce141	1.13E+003	0.00E+000	8.03E+004	0.00E+000	0.00E+000	0.00E+000	0.00E+000	0.00E+000
Ce143	9.50E+002	0.00E+000	6.53E+004	0.00E+000	0.00E+000	0.00E+000	0.00E+000	0.00E+000
Ce144	8.12E+002	0.00E+000	5.58E+004	0.00E+000	0.00E+000	0.00E+000	0.00E+000	0.00E+000
Np239	1.70E+004	0.00E+000	1.17E+006	0.00E+000	0.00E+000	0.00E+000	0.00E+000	0.00E+000
Pu238	2.39E+000	0.00E+000	1.64E+002	0.00E+000	0.00E+000	0.00E+000	0.00E+000	0.00E+000
Pu239	4.72E-001	0.00E+000	3.24E+001	0.00E+000	0.00E+000	0.00E+000	0.00E+000	0.00E+000
Pu240	7.77E-001	0.00E+000	5.34E+001	0.00E+000	0.00E+000	0.00E+000	0.00E+000	0.00E+000
Pu241	2.21E+002	0.00E+000	1.52E+004	0.00E+000	0.00E+000	0.00E+000	0.00E+000	0.00E+000
Sr89	2.03E+004	0.00E+000	1.40E+006	0.00E+000	0.00E+000	0.00E+000	0.00E+000	0.00E+000
Sr90	3.36E+003	0.00E+000	2.31E+005	0.00E+000	0.00E+000	0.00E+000	0.00E+000	0.00E+000
Sr91	2.19E+004	0.00E+000	1.50E+006	0.00E+000	0.00E+000	0.00E+000	0.00E+000	0.00E+000
Sr92	1.60E+004	0.00E+000	1.10E+006	0.00E+000	0.00E+000	0.00E+000	0.00E+000	0.00E+000

WW

	thyroid	wbody	skin	CEDE
Total dose:	0.00E+000	0.00E+000	0.00E+000	0.00E+000
Noble gas	0.00E+000	0.00E+000	0.00E+000	0.00E+000
Org iodine	0.00E+000	0.00E+000	0.00E+000	0.00E+000
Elem iodine	0.00E+000	0.00E+000	0.00E+000	0.00E+000
Part iodine	0.00E+000	0.00E+000	0.00E+000	0.00E+000
Cesium	0.00E+000	0.00E+000	0.00E+000	0.00E+000
Tellurium	0.00E+000	0.00E+000	0.00E+000	0.00E+000
Barium	0.00E+000	0.00E+000	0.00E+000	0.00E+000
Noble metal	0.00E+000	0.00E+000	0.00E+000	0.00E+000
Lanthanides	0.00E+000	0.00E+000	0.00E+000	0.00E+000
Cerium	0.00E+000	0.00E+000	0.00E+000	0.00E+000
Strontinum	0.00E+000	0.00E+000	0.00E+000	0.00E+000

	air_space	water_pool	surface	recirc	thyroid	wbody	skin	CEDE
Kr83m	2.13E+006	0.00E+000	0.00E+000	0.00E+000	0.00E+000	0.00E+000	0.00E+000	0.00E+000
Kr85m	7.43E+006	0.00E+000	0.00E+000	0.00E+000	0.00E+000	0.00E+000	0.00E+000	0.00E+000
Kr85	6.11E+005	0.00E+000	0.00E+000	0.00E+000	0.00E+000	0.00E+000	0.00E+000	0.00E+000
Kr87	5.24E+006	0.00E+000	0.00E+000	0.00E+000	0.00E+000	0.00E+000	0.00E+000	0.00E+000
Kr88	1.54E+007	0.00E+000	0.00E+000	0.00E+000	0.00E+000	0.00E+000	0.00E+000	0.00E+000
Kr89	4.65E-007	0.00E+000	0.00E+000	0.00E+000	0.00E+000	0.00E+000	0.00E+000	0.00E+000
Xe131m	4.12E+005	0.00E+000	0.00E+000	0.00E+000	0.00E+000	0.00E+000	0.00E+000	0.00E+000
Xe133m	2.39E+006	0.00E+000	0.00E+000	0.00E+000	0.00E+000	0.00E+000	0.00E+000	0.00E+000
Xe133	8.06E+007	0.00E+000	0.00E+000	0.00E+000	0.00E+000	0.00E+000	0.00E+000	0.00E+000
Xe135m	2.48E+004	0.00E+000	0.00E+000	0.00E+000	0.00E+000	0.00E+000	0.00E+000	0.00E+000
Xe135	1.85E+007	0.00E+000	0.00E+000	0.00E+000	0.00E+000	0.00E+000	0.00E+000	0.00E+000
Xe137	3.53E-004	0.00E+000	0.00E+000	0.00E+000	0.00E+000	0.00E+000	0.00E+000	0.00E+000
Xe138	1.36E+005	0.00E+000	0.00E+000	0.00E+000	0.00E+000	0.00E+000	0.00E+000	0.00E+000
I131Org	1.85E+004	0.00E+000	0.00E+000	0.00E+000	0.00E+000	0.00E+000	0.00E+000	0.00E+000
I132Org	1.28E+004	0.00E+000	0.00E+000	0.00E+000	0.00E+000	0.00E+000	0.00E+000	0.00E+000
I133Org	3.36E+004	0.00E+000	0.00E+000	0.00E+000	0.00E+000	0.00E+000	0.00E+000	0.00E+000
I134Org	5.70E+003	0.00E+000	0.00E+000	0.00E+000	0.00E+000	0.00E+000	0.00E+000	0.00E+000
I135Org	2.62E+004	0.00E+000	0.00E+000	0.00E+000	0.00E+000	0.00E+000	0.00E+000	0.00E+000
I131Elem	1.31E+004	0.00E+000	0.00E+000	0.00E+000	0.00E+000	0.00E+000	0.00E+000	0.00E+000
I132Elem	9.28E+003	0.00E+000	0.00E+000	0.00E+000	0.00E+000	0.00E+000	0.00E+000	0.00E+000
I133Elem	2.35E+004	0.00E+000	0.00E+000	0.00E+000	0.00E+000	0.00E+000	0.00E+000	0.00E+000
I134Elem	3.98E+003	0.00E+000	0.00E+000	0.00E+000	0.00E+000	0.00E+000	0.00E+000	0.00E+000
I135Elem	1.83E+004	0.00E+000	0.00E+000	0.00E+000	0.00E+000	0.00E+000	0.00E+000	0.00E+000
I131Part	2.54E+005	0.00E+000	0.00E+000	0.00E+000	0.00E+000	0.00E+000	0.00E+000	0.00E+000
I132Part	1.75E+005	0.00E+000	0.00E+000	0.00E+000	0.00E+000	0.00E+000	0.00E+000	0.00E+000
I133Part	4.60E+005	0.00E+000	0.00E+000	0.00E+000	0.00E+000	0.00E+000	0.00E+000	0.00E+000
I134Part	7.80E+004	0.00E+000	0.00E+000	0.00E+000	0.00E+000	0.00E+000	0.00E+000	0.00E+000
I135Part	3.59E+005	0.00E+000	0.00E+000	0.00E+000	0.00E+000	0.00E+000	0.00E+000	0.00E+000
Rb86	3.43E+002	0.00E+000	0.00E+000	0.00E+000	0.00E+000	0.00E+000	0.00E+000	0.00E+000
Cs134	4.82E+004	0.00E+000	0.00E+000	0.00E+000	0.00E+000	0.00E+000	0.00E+000	0.00E+000
Cs136	1.06E+004	0.00E+000	0.00E+000	0.00E+000	0.00E+000	0.00E+000	0.00E+000	0.00E+000
Cs137	3.88E+004	0.00E+000	0.00E+000	0.00E+000	0.00E+000	0.00E+000	0.00E+000	0.00E+000
Sb127	6.20E+003	0.00E+000	0.00E+000	0.00E+000	0.00E+000	0.00E+000	0.00E+000	0.00E+000
Sb129	1.23E+004	0.00E+000	0.00E+000	0.00E+000	0.00E+000	0.00E+000	0.00E+000	0.00E+000
Te127m	8.89E+002	0.00E+000	0.00E+000	0.00E+000	0.00E+000	0.00E+000	0.00E+000	0.00E+000
Te127	5.30E+003	0.00E+000	0.00E+000	0.00E+000	0.00E+000	0.00E+000	0.00E+000	0.00E+000
Te129m	2.65E+003	0.00E+000	0.00E+000	0.00E+000	0.00E+000	0.00E+000	0.00E+000	0.00E+000
Te129	5.26E+003	0.00E+000	0.00E+000	0.00E+000	0.00E+000	0.00E+000	0.00E+000	0.00E+000
Te131m	7.58E+003	0.00E+000	0.00E+000	0.00E+000	0.00E+000	0.00E+000	0.00E+000	0.00E+000
Te132	7.45E+004	0.00E+000	0.00E+000	0.00E+000	0.00E+000	0.00E+000	0.00E+000	0.00E+000
Ba137m	6.26E-003	0.00E+000	0.00E+000	0.00E+000	0.00E+000	0.00E+000	0.00E+000	0.00E+000
Ba139	1.07E+004	0.00E+000	0.00E+000	0.00E+000	0.00E+000	0.00E+000	0.00E+000	0.00E+000
Ba140	3.50E+004	0.00E+000	0.00E+000	0.00E+000	0.00E+000	0.00E+000	0.00E+000	0.00E+000
Mo99	4.61E+003	0.00E+000	0.00E+000	0.00E+000	0.00E+000	0.00E+000	0.00E+000	0.00E+000
Tc99m	3.20E+003	0.00E+000	0.00E+000	0.00E+000	0.00E+000	0.00E+000	0.00E+000	0.00E+000

Ru103	4.53E+003	0.00E+000	0.00E+000	0.00E+000	0.00E+000	0.00E+000	0.00E+000	0.00E+000
Ru105	2.31E+003	0.00E+000	0.00E+000	0.00E+000	0.00E+000	0.00E+000	0.00E+000	0.00E+000
Ru106	1.97E+003	0.00E+000	0.00E+000	0.00E+000	0.00E+000	0.00E+000	0.00E+000	0.00E+000
Rh105	3.22E+003	0.00E+000	0.00E+000	0.00E+000	0.00E+000	0.00E+000	0.00E+000	0.00E+000
Y90	1.49E+001	0.00E+000	0.00E+000	0.00E+000	0.00E+000	0.00E+000	0.00E+000	0.00E+000
Y91	9.07E+002	0.00E+000	0.00E+000	0.00E+000	0.00E+000	0.00E+000	0.00E+000	0.00E+000
Y92	2.00E+003	0.00E+000	0.00E+000	0.00E+000	0.00E+000	0.00E+000	0.00E+000	0.00E+000
Y93	2.26E+002	0.00E+000	0.00E+000	0.00E+000	0.00E+000	0.00E+000	0.00E+000	0.00E+000
Zr95	3.21E+002	0.00E+000	0.00E+000	0.00E+000	0.00E+000	0.00E+000	0.00E+000	0.00E+000
Zr97	2.95E+002	0.00E+000	0.00E+000	0.00E+000	0.00E+000	0.00E+000	0.00E+000	0.00E+000
Nb95	3.20E+002	0.00E+000	0.00E+000	0.00E+000	0.00E+000	0.00E+000	0.00E+000	0.00E+000
La140	3.84E+002	0.00E+000	0.00E+000	0.00E+000	0.00E+000	0.00E+000	0.00E+000	0.00E+000
La141	2.12E+002	0.00E+000	0.00E+000	0.00E+000	0.00E+000	0.00E+000	0.00E+000	0.00E+000
La142	1.04E+002	0.00E+000	0.00E+000	0.00E+000	0.00E+000	0.00E+000	0.00E+000	0.00E+000
Pr143	2.92E+002	0.00E+000	0.00E+000	0.00E+000	0.00E+000	0.00E+000	0.00E+000	0.00E+000
Nd147	1.28E+002	0.00E+000	0.00E+000	0.00E+000	0.00E+000	0.00E+000	0.00E+000	0.00E+000
Am241	5.77E-002	0.00E+000	0.00E+000	0.00E+000	0.00E+000	0.00E+000	0.00E+000	0.00E+000
Cm242	1.31E+001	0.00E+000	0.00E+000	0.00E+000	0.00E+000	0.00E+000	0.00E+000	0.00E+000
Cm244	1.06E+000	0.00E+000	0.00E+000	0.00E+000	0.00E+000	0.00E+000	0.00E+000	0.00E+000
Ce141	8.66E+002	0.00E+000	0.00E+000	0.00E+000	0.00E+000	0.00E+000	0.00E+000	0.00E+000
Ce143	7.26E+002	0.00E+000	0.00E+000	0.00E+000	0.00E+000	0.00E+000	0.00E+000	0.00E+000
Ce144	6.20E+002	0.00E+000	0.00E+000	0.00E+000	0.00E+000	0.00E+000	0.00E+000	0.00E+000
Np239	1.30E+004	0.00E+000	0.00E+000	0.00E+000	0.00E+000	0.00E+000	0.00E+000	0.00E+000
Pu238	1.82E+000	0.00E+000	0.00E+000	0.00E+000	0.00E+000	0.00E+000	0.00E+000	0.00E+000
Pu239	3.61E-001	0.00E+000	0.00E+000	0.00E+000	0.00E+000	0.00E+000	0.00E+000	0.00E+000
Pu240	5.93E-001	0.00E+000	0.00E+000	0.00E+000	0.00E+000	0.00E+000	0.00E+000	0.00E+000
Pu241	1.69E+002	0.00E+000	0.00E+000	0.00E+000	0.00E+000	0.00E+000	0.00E+000	0.00E+000
Sr89	1.55E+004	0.00E+000	0.00E+000	0.00E+000	0.00E+000	0.00E+000	0.00E+000	0.00E+000
Sr90	2.57E+003	0.00E+000	0.00E+000	0.00E+000	0.00E+000	0.00E+000	0.00E+000	0.00E+000
Sr91	1.67E+004	0.00E+000	0.00E+000	0.00E+000	0.00E+000	0.00E+000	0.00E+000	0.00E+000
Sr92	1.22E+004	0.00E+000	0.00E+000	0.00E+000	0.00E+000	0.00E+000	0.00E+000	0.00E+000

APPENDIX F

RADTRAD INPUT FILES ".PSF"

Columbia_1f.psf

```
Radtrad 3.02 1/5/2000
 Columbia AST - Failed Line - Filtered
 Nuclide Inventory File:
 c:\polestar\cgs qa\radtrad check\columbia.nif
 Plant Power Level:
  3.5560E+03
 Compartments:
   7
 Compartment 1:
 DW
   3
  2.0050E+05
   1
   0
   0
   0
   0
 Compartment 2:
 WW
   3
  1.4420E+05
   0
   0
   0
   0
   0
 Compartment 3:
 RB
   3
  1.3920E+06
   0
   0
   0
   0
   0
 Compartment 4:
 SP
   3
  1.3730E+05
   0
   0
   0
   0
   0
 Compartment 5:
 CR
   1
  2.1400E+05
   0
   0
   0
   0
   0
 Compartment 6:
 Enviro
   2
  0.0000E+00
   0
   0
   0
   0
   0
 Compartment 7:
 Dummy
   3
  1.0000E+06
   0
```

```
  0
  0
  0
  0
Pathways:
 12
Pathway 1:
DW to WW
  1
  2
  2
Pathway 2:
WW to DW
  2
  1
  2
Pathway 3:
Failed SL to Enviro
  1
  6
  2
Pathway 4:
Intact SLs to Dummy
  1
  7
  2
Pathway 5:
DW to RB
  1
  3
  2
Pathway 6:
WW to RB
  2
  3
  2
Pathway 7:
Bypass DW to Dummy
  1
  7
  2
Pathway 8:
Bypass WW to Dummy
  2
  7
  2
Pathway 9:
SP to RB
  4
  3
  2
Pathway 10:
RB SGTS to Dummy
  3
  7
  2
Pathway 11:
Enviro to CR (filtered)
  6
  5
  2
Pathway 12:
CR to Enviro
  5
  6
  2
End of Plant Model File
Scenario Description Name:

Plant Model Filename:

Source Term:
  1
  1   1.0000E+00
 c:\radtrad3.02a\defaults\fgr11&12.inp
 c:\polestar\cgs qa\radtrad check\columbia.rft
  0.0000E+00
  1
  9.5000E-01   4.8500E-02   1.5000E-03
1.0000E+00
 Overlying Pool:
  0
  0.0000E+00
  0
```

```
  0
  0
  0
Compartments:
  7
Compartment 1:
  0
  1
  1
  0.0000E+00
  5
  0.0000E+00   0.0000E+00
  2.5000E-01   6.2000E+00
  2.4400E+00   6.2000E-01
  2.4000E+01   0.0000E+00
  7.2000E+02   0.0000E+00
  1
  0.0000E+00
  5
  0.0000E+00   0.0000E+00
  2.5000E-01   6.2000E+00
  2.4400E+00   6.2000E-01
  2.4000E+01   0.0000E+00
  7.2000E+02   0.0000E+00
  1
  0.0000E+00
  0
  0
  0
  0
  0
  0
  0
Compartment 2:
  0
  1
  0
  0
  0
  0
  0
  0
  0
Compartment 3:
  0
  1
  0
  0
  0
  0
  0
  0
  0
Compartment 4:
  0
  1
  0
  0
  0
  0
  0
  0
  0
Compartment 5:
  0
  1
  0
  0
  0
  0
  0
  0
  0
Compartment 6:
  0
  1
  0
  0
  0
  0
  0
  0
  0
Compartment 7:
  0
  1
```

```
   0
   0
   0
   0
   0
   0
   0
 Pathways:
  12
 Pathway 1:
   0
   0
   0
   0
   0
   1
   3
   0.0000E+00   0.0000E+00   0.0000E+00
0.0000E+00   0.0000E+00
   2.0333E+00   1.4420E+05   0.0000E+00
0.0000E+00   0.0000E+00
   7.2000E+02   1.4420E+05   0.0000E+00
0.0000E+00   0.0000E+00
   0
   0
   0
   0
   0
   0
   0
 Pathway 2:
   0
   0
   0
   0
   0
   1
   3
   0.0000E+00   0.0000E+00   0.0000E+00
0.0000E+00   0.0000E+00
   2.0333E+00   1.4420E+05   0.0000E+00
0.0000E+00   0.0000E+00
   7.2000E+02   1.4420E+05   0.0000E+00
0.0000E+00   0.0000E+00
   0
   0
   0
   0
   0
   0
 Pathway 3:
   0
   0
   0
   0
   0
   1
   3
   0.0000E+00   9.9500E-02   0.0000E+00
0.0000E+00   0.0000E+00
   2.4000E+01   4.9800E-02   0.0000E+00
0.0000E+00   0.0000E+00
   7.2000E+02   4.9800E-02   0.0000E+00
0.0000E+00   0.0000E+00
   0
   0
   0
   0
   0
   0
 Pathway 4:
   0
   0
   0
   0
   0
   1
   3
   0.0000E+00   2.9900E-01   8.0400E+01
6.4800E+01   1.0000E-01
   2.4000E+01   1.4900E-01   8.0400E+01
6.4800E+01   1.0000E-01
   7.2000E+02   1.4900E-01   8.0400E+01
6.4800E+01   1.0000E-01
```

```
   0
   0
   0
   0
   0
   0
 Pathway 5:
   0
   0
   0
   0
   0
   1
   4
   0.0000E+00   0.0000E+00   0.0000E+00
0.0000E+00   0.0000E+00
   1.6700E-01   6.9600E-01   0.0000E+00
0.0000E+00   0.0000E+00
   2.4000E+01   3.4800E-01   0.0000E+00
0.0000E+00   0.0000E+00
   7.2000E+02   3.4800E-01   0.0000E+00
0.0000E+00   0.0000E+00
   0
   0
   0
   0
   0
   0
 Pathway 6:
   0
   0
   0
   0
   0
   1
   4
   0.0000E+00   0.0000E+00   0.0000E+00
0.0000E+00   0.0000E+00
   1.6700E-01   5.0000E-01   0.0000E+00
0.0000E+00   0.0000E+00
   2.4000E+01   2.5000E-01   0.0000E+00
0.0000E+00   0.0000E+00
   7.2000E+02   2.5000E-01   0.0000E+00
0.0000E+00   0.0000E+00
   0
   0
   0
   0
   0
   0
 Pathway 7:
   0
   0
   0
   0
   0
   1
   4
   0.0000E+00   7.5200E-01   0.0000E+00
0.0000E+00   0.0000E+00
   1.6700E-01   5.6000E-02   0.0000E+00
0.0000E+00   0.0000E+00
   2.4000E+01   2.8000E-02   0.0000E+00
0.0000E+00   0.0000E+00
   7.2000E+02   2.8000E-02   0.0000E+00
0.0000E+00   0.0000E+00
   0
   0
   0
   0
   0
   0
 Pathway 8:
   0
   0
   0
   0
   0
   1
   4
   0.0000E+00   5.4100E-01   0.0000E+00
0.0000E+00   0.0000E+00
   1.6700E-01   4.0000E-02   0.0000E+00
0.0000E+00   0.0000E+00
```

```
   2.4000E+01   2.0000E-02   0.0000E+00
0.0000E+00   0.0000E+00
   7.2000E+02   2.0000E-02   0.0000E+00
0.0000E+00   0.0000E+00
   0
   0
   0
   0
   0
   0
 Pathway 9:
   0
   0
   0
   0
   0
   1
   3
   0.0000E+00   0.0000E+00   0.0000E+00
0.0000E+00   0.0000E+00
   2.5000E-01   2.6800E-01   1.0000E+02
0.0000E+00   0.0000E+00
   7.2000E+02   2.6800E-01   1.0000E+02
0.0000E+00   0.0000E+00
   0
   0
   0
   0
   0
   0
   0
   0
 Pathway 10:
   0
   0
   0
   0
   0
   1
   3
   0.0000E+00   5.0000E+03   0.0000E+00
0.0000E+00   0.0000E+00
   1.6700E-01   5.0000E+03   9.8000E+01
9.8000E+01   9.8000E+01
   7.2000E+02   5.0000E+03   9.8000E+01
9.8000E+01   9.8000E+01
   0
   0
   0
   0
   0
   0
 Pathway 11:
   0
   0
   0
   0
   0
   1
   3
   0.0000E+00   1.8000E+03   9.9000E+01
9.5000E+01   9.5000E+01
   5.0000E-01   9.0000E+02   9.9000E+01
9.5000E+01   9.5000E+01
   7.2000E+02   9.0000E+02   9.9000E+01
9.5000E+01   9.5000E+01
   0
   0
   0
   0
   0
   0
 Pathway 12:
   0
   0
   0
   0
   0
   1
   3
   0.0000E+00   2.0500E+03   1.0000E+02
1.0000E+02   1.0000E+02
   5.0000E-01   1.0250E+03   1.0000E+02
1.0000E+02   1.0000E+02
   7.2000E+02   1.0250E+03   1.0000E+02
1.0000E+02   1.0000E+02
```

```
  0
  0
  0
  0
  0
  0
Dose Locations:
  3
Location 1:
CR
  5
  0
  1
  2
  0.0000E+00   3.5000E-04
  7.2000E+02   3.5000E-04
  1
  4
  0.0000E+00   1.0000E+00
  2.4000E+01   6.0000E-01
  9.6000E+01   4.0000E-01
  7.2000E+02   4.0000E-01
Location 2:
EAB
  6
  1
  2
  0.0000E+00   1.7000E-04
  7.2000E+02   1.7000E-04
  1
  4
  0.0000E+00   3.5000E-04
  8.0000E+00   1.8000E-04
  2.4000E+01   2.3000E-04
  7.2000E+02   2.3000E-04
  0
Location 3:
LPZ
  6
  1
  5
  0.0000E+00   5.6000E-05
  8.0000E+00   1.3000E-05
  2.4000E+01   4.2000E-06
  9.6000E+01   9.0000E-07
  7.2000E+02   9.0000E-07
  1
  4
  0.0000E+00   3.5000E-04
  8.0000E+00   1.8000E-04
  2.4000E+01   2.3000E-04
  7.2000E+02   2.3000E-04
  0
Effective Volume Location:
  1
  7
  0.0000E+00   7.0300E-04
  5.0000E-01   6.1300E-04
  2.0000E+00   4.7100E-04
  8.0000E+00   2.4200E-04
  2.4000E+01   1.6600E-04
  9.6000E+01   1.2500E-04
  7.2000E+02   1.2500E-04
Simulation Parameters:
  6
  0.0000E+00   5.0000E-03
  4.0000E+00   5.0000E-01
  8.0000E+00   1.0000E+00
  2.4000E+01   2.0000E+00
  4.8000E+01   2.4000E+01
  7.2000E+02   0.0000E+00
Output Filename:
C:\Polestar\CGS QA\Radtrad Check\Columbia _1f.o0
  1
  1
  1
  1
  1
End of Scenario File
```

Columbia_1u.psf

```
Radtrad 3.02 1/5/2000
 Columbia AST - Failed Line - Unfiltered
 Nuclide Inventory File:
 c:\polestar\cgs qa\radtrad check\columbia.nif
 Plant Power Level:
  3.5560E+03
 Compartments:
   7
 Compartment 1:
 DW
   3
  2.0050E+05
   1
   0
   0
   0
   0
 Compartment 2:
 WW
   3
  1.4420E+05
   0
   0
   0
   0
   0
 Compartment 3:
 RB
   3
  1.3920E+06
   0
   0
   0
   0
   0
 Compartment 4:
 SP
   3
  1.3730E+05
   0
   0
   0
   0
   0
 Compartment 5:
 CR
   1
  2.1400E+05
   0
   0
   0
   0
   0
 Compartment 6:
 Enviro
   2
  0.0000E+00
   0
   0
   0
   0
   0
 Compartment 7:
 Dummy
   3
  1.0000E+06
   0
   0
   0
   0
   0
 Pathways:
  12
 Pathway 1:
 DW to WW
   1
   2
   2
 Pathway 2:
 WW to DW
   2
```

```
  1
  2
Pathway 3:
Failed SL to Enviro
  1
  6
  2
Pathway 4:
Intact SLs to Dummy
  1
  7
  2
Pathway 5:
DW to RB
  1
  3
  2
Pathway 6:
WW to RB
  2
  3
  2
Pathway 7:
Bypass DW to Dummy
  1
  7
  2
Pathway 8:
Bypass WW to Dummy
  2
  7
  2
Pathway 9:
SP to RB
  4
  3
  2
Pathway 10:
RB SGTS to Dummy
  3
  7
  2
Pathway 11:
Enviro to CR (unfiltered)
  6
  5
  2
Pathway 12:
CR to Enviro
  5
  6
  2
End of Plant Model File
Scenario Description Name:

Plant Model Filename:

Source Term:
  1
  1   1.0000E+00
c:\radtrad3.02a\defaults\fgr11&12.inp
c:\polestar\cgs qa\radtrad check\columbia.rft
  0.0000E+00
  1
  9.5000E-01   4.8500E-02   1.5000E-03
1.0000E+00
Overlying Pool:
  0
  0.0000E+00
  0
  0.0000E+00
  0
  0
  0
  0
Compartments:
  7
Compartment 1:
  0
  1
  1
  0.0000E+00
  5
  0.0000E+00   0.0000E+00
  2.5000E-01   6.2000E+00
  2.4400E+00   6.2000E-01
```

```
  2.4000E+01   0.0000E+00
  7.2000E+02   0.0000E+00
  1
  0.0000E+00
  5
  0.0000E+00   0.0000E+00
  2.5000E-01   6.2000E+00
  2.4400E+00   6.2000E-01
  2.4000E+01   0.0000E+00
  7.2000E+02   0.0000E+00
  1
  0.0000E+00
  0
  0
  0
  0
  0
Compartment 2:
  0
  1
  0
  0
  0
  0
  0
  0
  0
Compartment 3:
  0
  1
  0
  0
  0
  0
  0
  0
  0
Compartment 4:
  0
  1
  0
  0
  0
  0
  0
  0
  0
Compartment 5:
  0
  1
  0
  0
  0
  0
  0
  0
  0
Compartment 6:
  0
  1
  0
  0
  0
  0
  0
  0
  0
Compartment 7:
  0
  1
  0
  0
  0
  0
  0
  0
  0
Pathways:
 12
Pathway 1:
  0
  0
  0
  0
```

```
   0
   1
   3
   0.0000E+00   0.0000E+00   0.0000E+00
0.0000E+00   0.0000E+00
   2.0333E+00   1.4420E+05   0.0000E+00
0.0000E+00   0.0000E+00
   7.2000E+02   1.4420E+05   0.0000E+00
0.0000E+00   0.0000E+00
   0
   0
   0
   0
   0
   0
 Pathway 2:
   0
   0
   0
   0
   0
   1
   3
   0.0000E+00   0.0000E+00   0.0000E+00
0.0000E+00   0.0000E+00
   2.0333E+00   1.4420E+05   0.0000E+00
0.0000E+00   0.0000E+00
   7.2000E+02   1.4420E+05   0.0000E+00
0.0000E+00   0.0000E+00
   0
   0
   0
   0
   0
   0
   0
 Pathway 3:
   0
   0
   0
   0
   0
   1
   3
   0.0000E+00   9.9500E-02   0.0000E+00
0.0000E+00   0.0000E+00
   2.4000E+01   4.9800E-02   0.0000E+00
0.0000E+00   0.0000E+00
   7.2000E+02   4.9800E-02   0.0000E+00
0.0000E+00   0.0000E+00
   0
   0
   0
   0
   0
   0
 Pathway 4:
   0
   0
   0
   0
   0
   1
   3
   0.0000E+00   2.9900E-01   8.0400E+01
6.4800E+01   1.0000E-01
   2.4000E+01   1.4900E-01   8.0400E+01
6.4800E+01   1.0000E-01
   7.2000E+02   1.4900E-01   8.0400E+01
6.4800E+01   1.0000E-01
   0
   0
   0
   0
   0
   0
   0
 Pathway 5:
   0
   0
   0
   0
   0
   1
   4
```

```
   0.0000E+00   0.0000E+00   0.0000E+00
0.0000E+00   0.0000E+00
   1.6700E-01   6.9600E-01   0.0000E+00
0.0000E+00   0.0000E+00
   2.4000E+01   3.4800E-01   0.0000E+00
0.0000E+00   0.0000E+00
   7.2000E+02   3.4800E-01   0.0000E+00
0.0000E+00   0.0000E+00
   0
   0
   0
   0
   0
   0
 Pathway 6:
   0
   0
   0
   0
   0
   1
   4
   0.0000E+00   0.0000E+00   0.0000E+00
0.0000E+00   0.0000E+00
   1.6700E-01   5.0000E-01   0.0000E+00
0.0000E+00   0.0000E+00
   2.4000E+01   2.5000E-01   0.0000E+00
0.0000E+00   0.0000E+00
   7.2000E+02   2.5000E-01   0.0000E+00
0.0000E+00   0.0000E+00
   0
   0
   0
   0
   0
   0
 Pathway 7:
   0
   0
   0
   0
   0
   1
   4
   0.0000E+00   7.5200E-01   0.0000E+00
0.0000E+00   0.0000E+00
   1.6700E-01   5.6000E-02   0.0000E+00
0.0000E+00   0.0000E+00
   2.4000E+01   2.8000E-02   0.0000E+00
0.0000E+00   0.0000E+00
   7.2000E+02   2.8000E-02   0.0000E+00
0.0000E+00   0.0000E+00
   0
   0
   0
   0
   0
   0
 Pathway 8:
   0
   0
   0
   0
   0
   1
   4
   0.0000E+00   5.4100E-01   0.0000E+00
0.0000E+00   0.0000E+00
   1.6700E-01   4.0000E-02   0.0000E+00
0.0000E+00   0.0000E+00
   2.4000E+01   2.0000E-02   0.0000E+00
0.0000E+00   0.0000E+00
   7.2000E+02   2.0000E-02   0.0000E+00
0.0000E+00   0.0000E+00
   0
   0
   0
   0
   0
   0
 Pathway 9:
   0
   0
   0
```

```
   0
   0
   1
   3
   0.0000E+00   0.0000E+00   0.0000E+00
0.0000E+00   0.0000E+00
   2.5000E-01   2.6800E-01   1.0000E+02
0.0000E+00   0.0000E+00
   7.2000E+02   2.6800E-01   1.0000E+02
0.0000E+00   0.0000E+00
   0
   0
   0
   0
   0
   0
 Pathway 10:
   0
   0
   0
   0
   0
   1
   3
   0.0000E+00   5.0000E+03   0.0000E+00
0.0000E+00   0.0000E+00
   1.6700E-01   5.0000E+03   9.8000E+01
9.8000E+01   9.8000E+01
   7.2000E+02   5.0000E+03   9.8000E+01
9.8000E+01   9.8000E+01
   0
   0
   0
   0
   0
   0
 Pathway 11:
   0
   0
   0
   0
   0
   1
   3
   0.0000E+00   2.5000E+02   0.0000E+00
0.0000E+00   0.0000E+00
   5.0000E-01   1.2500E+02   0.0000E+00
0.0000E+00   0.0000E+00
   7.2000E+02   1.2500E+02   0.0000E+00
0.0000E+00   0.0000E+00
   0
   0
   0
   0
   0
   0
 Pathway 12:
   0
   0
   0
   0
   0
   1
   3
   0.0000E+00   2.0500E+03   1.0000E+02
1.0000E+02   1.0000E+02
   5.0000E-01   1.0250E+03   1.0000E+02
1.0000E+02   1.0000E+02
   7.2000E+02   1.0250E+03   1.0000E+02
1.0000E+02   1.0000E+02
   0
   0
   0
   0
   0
   0
   0
 Dose Locations:
   3
 Location 1:
 CR
   5
   0
   1
   2
```

```
  0.0000E+00   3.5000E-04
  7.2000E+02   3.5000E-04
  1
  4
  0.0000E+00   1.0000E+00
  2.4000E+01   6.0000E-01
  9.6000E+01   4.0000E-01
  7.2000E+02   4.0000E-01
Location 2:
EAB
  6
  1
  2
  0.0000E+00   1.7000E-04
  7.2000E+02   1.7000E-04
  1
  4
  0.0000E+00   3.5000E-04
  8.0000E+00   1.8000E-04
  2.4000E+01   2.3000E-04
  7.2000E+02   2.3000E-04
  0
Location 3:
LPZ
  6
  1
  5
  0.0000E+00   5.6000E-05
  8.0000E+00   1.3000E-05
  2.4000E+01   4.2000E-06
  9.6000E+01   9.0000E-07
  7.2000E+02   9.0000E-07
  1
  4
  0.0000E+00   3.5000E-04
  8.0000E+00   1.8000E-04
  2.4000E+01   2.3000E-04
  7.2000E+02   2.3000E-04
  0
Effective Volume Location:
  1
  6
  0.0000E+00   3.1700E-03
  2.0000E+00   2.4000E-03
  8.0000E+00   1.1900E-03
  2.4000E+01   7.9100E-04
  9.6000E+01   5.8700E-04
  7.2000E+02   5.8700E-04
Simulation Parameters:
  6
  0.0000E+00   5.0000E-03
  4.0000E+00   5.0000E-01
  8.0000E+00   1.0000E+00
  2.4000E+01   2.0000E+00
  4.8000E+01   2.4000E+01
  7.2000E+02   0.0000E+00
Output Filename:
C:\Polestar\CGS QA\Radtrad Check\Columbia _1u.o0
  1
  1
  1
  1
  1
End of Scenario File
```

Columbia_2f.psf

```
Radtrad 3.02 1/5/2000
 Columbia AST - Intact Lines - Filtered
 Nuclide Inventory File:
 c:\polestar\cgs qa\radtrad check\columbia.nif
 Plant Power Level:
  3.5560E+03
 Compartments:
   7
 Compartment 1:
 DW
   3
  2.0050E+05
   1
   0
   0
   0
   0
 Compartment 2:
 WW
   3
  1.4420E+05
   0
   0
   0
   0
   0
   0
   0
 Compartment 3:
 RB
   3
  1.3920E+06
   0
   0
   0
   0
   0
 Compartment 4:
 SP
   3
  1.3730E+05
   0
   0
   0
   0
   0
 Compartment 5:
 CR
   1
  2.1400E+05
   0
   0
   0
   0
   0
 Compartment 6:
 Enviro
   2
  0.0000E+00
   0
   0
   0
   0
   0
 Compartment 7:
 Dummy
   3
  1.0000E+06
   0
   0
   0
   0
   0
 Pathways:
  12
 Pathway 1:
 DW to WW
   1
   2
   2
 Pathway 2:
 WW to DW
   2
```

```
  1
  2
Pathway 3:
Failed SL to Dummy
  1
  7
  2
Pathway 4:
Intact SLs to Enviro
  1
  6
  2
Pathway 5:
DW to RB
  1
  3
  2
Pathway 6:
WW to RB
  2
  3
  2
Pathway 7:
Bypass DW to Dummy
  1
  7
  2
Pathway 8:
Bypass WW to Dummy
  2
  7
  2
Pathway 9:
SP to RB
  4
  3
  2
Pathway 10:
RB SGTS to Dummy
  3
  7
  2
Pathway 11:
Enviro to CR (filtered)
  6
  5
  2
Pathway 12:
CR to Enviro
  5
  6
  2
End of Plant Model File
Scenario Description Name:

Plant Model Filename:

Source Term:
  1
  1   1.0000E+00
c:\radtrad3.02a\defaults\fgr11&12.inp
c:\polestar\cgs qa\radtrad check\columbia.rft
  0.0000E+00
  1
  9.5000E-01   4.8500E-02   1.5000E-03
1.0000E+00
Overlying Pool:
  0
  0.0000E+00
  0
  0
  0
  0
  0
  0
Compartments:
  7
Compartment 1:
  0
  1
  1
  0.0000E+00
  5
  0.0000E+00   0.0000E+00
  2.5000E-01   6.2000E+00
  2.4400E+00   6.2000E-01
```

```
  2.4000E+01   0.0000E+00
  7.2000E+02   0.0000E+00
  1
  0.0000E+00
  5
  0.0000E+00   0.0000E+00
  2.5000E-01   6.2000E+00
  2.4400E+00   6.2000E-01
  2.4000E+01   0.0000E+00
  7.2000E+02   0.0000E+00
  1
  0.0000E+00
  0
  0
  0
  0
  0
Compartment 2:
  0
  1
  0
  0
  0
  0
  0
  0
  0
Compartment 3:
  0
  1
  0
  0
  0
  0
  0
  0
  0
Compartment 4:
  0
  1
  0
  0
  0
  0
  0
  0
  0
Compartment 5:
  0
  1
  0
  0
  0
  0
  0
  0
  0
Compartment 6:
  0
  1
  0
  0
  0
  0
  0
  0
  0
Compartment 7:
  0
  1
  0
  0
  0
  0
  0
  0
  0
Pathways:
 12
Pathway 1:
  0
  0
  0
  0
```

```
   0
   1
   3
   0.0000E+00   0.0000E+00   0.0000E+00
0.0000E+00   0.0000E+00
   2.0333E+00   1.4420E+05   0.0000E+00
0.0000E+00   0.0000E+00
   7.2000E+02   1.4420E+05   0.0000E+00
0.0000E+00   0.0000E+00
   0
   0
   0
   0
   0
   0
 Pathway 2:
   0
   0
   0
   0
   0
   1
   3
   0.0000E+00   0.0000E+00   0.0000E+00
0.0000E+00   0.0000E+00
   2.0333E+00   1.4420E+05   0.0000E+00
0.0000E+00   0.0000E+00
   7.2000E+02   1.4420E+05   0.0000E+00
0.0000E+00   0.0000E+00
   0
   0
   0
   0
   0
   0
 Pathway 3:
   0
   0
   0
   0
   0
   1
   3
   0.0000E+00   9.9500E-02   0.0000E+00
0.0000E+00   0.0000E+00
   2.4000E+01   4.9800E-02   0.0000E+00
0.0000E+00   0.0000E+00
   7.2000E+02   4.9800E-02   0.0000E+00
0.0000E+00   0.0000E+00
   0
   0
   0
   0
   0
   0
 Pathway 4:
   0
   0
   0
   0
   0
   1
   3
   0.0000E+00   2.9900E-01   8.0400E+01
6.4800E+01   1.0000E-01
   2.4000E+01   1.4900E-01   8.0400E+01
6.4800E+01   1.0000E-01
   7.2000E+02   1.4900E-01   8.0400E+01
6.4800E+01   1.0000E-01
   0
   0
   0
   0
   0
   0
 Pathway 5:
   0
   0
   0
   0
   0
   1
   4
```

```
   0.0000E+00   0.0000E+00   0.0000E+00
0.0000E+00   0.0000E+00
   1.6700E-01   6.9600E-01   0.0000E+00
0.0000E+00   0.0000E+00
   2.4000E+01   3.4800E-01   0.0000E+00
0.0000E+00   0.0000E+00
   7.2000E+02   3.4800E-01   0.0000E+00
0.0000E+00   0.0000E+00
   0
   0
   0
   0
   0
   0
 Pathway 6:
   0
   0
   0
   0
   0
   1
   4
   0.0000E+00   0.0000E+00   0.0000E+00
0.0000E+00   0.0000E+00
   1.6700E-01   5.0000E-01   0.0000E+00
0.0000E+00   0.0000E+00
   2.4000E+01   2.5000E-01   0.0000E+00
0.0000E+00   0.0000E+00
   7.2000E+02   2.5000E-01   0.0000E+00
0.0000E+00   0.0000E+00
   0
   0
   0
   0
   0
   0
 Pathway 7:
   0
   0
   0
   0
   0
   1
   4
   0.0000E+00   7.5200E-01   0.0000E+00
0.0000E+00   0.0000E+00
   1.6700E-01   5.6000E-02   0.0000E+00
0.0000E+00   0.0000E+00
   2.4000E+01   2.8000E-02   0.0000E+00
0.0000E+00   0.0000E+00
   7.2000E+02   2.8000E-02   0.0000E+00
0.0000E+00   0.0000E+00
   0
   0
   0
   0
   0
   0
 Pathway 8:
   0
   0
   0
   0
   0
   1
   4
   0.0000E+00   5.4100E-01   0.0000E+00
0.0000E+00   0.0000E+00
   1.6700E-01   4.0000E-02   0.0000E+00
0.0000E+00   0.0000E+00
   2.4000E+01   2.0000E-02   0.0000E+00
0.0000E+00   0.0000E+00
   7.2000E+02   2.0000E-02   0.0000E+00
0.0000E+00   0.0000E+00
   0
   0
   0
   0
   0
   0
 Pathway 9:
   0
   0
   0
```

```
   0
   0
   1
   3
   0.0000E+00   0.0000E+00   0.0000E+00
0.0000E+00   0.0000E+00
   2.5000E-01   2.6800E-01   1.0000E+02
0.0000E+00   0.0000E+00
   7.2000E+02   2.6800E-01   1.0000E+02
0.0000E+00   0.0000E+00
   0
   0
   0
   0
   0
   0
 Pathway 10:
   0
   0
   0
   0
   0
   1
   3
   0.0000E+00   5.0000E+03   0.0000E+00
0.0000E+00   0.0000E+00
   1.6700E-01   5.0000E+03   9.8000E+01
9.8000E+01   9.8000E+01
   7.2000E+02   5.0000E+03   9.8000E+01
9.8000E+01   9.8000E+01
   0
   0
   0
   0
   0
   0
 Pathway 11:
   0
   0
   0
   0
   0
   1
   3
   0.0000E+00   1.8000E+03   9.9000E+01
9.5000E+01   9.5000E+01
   5.0000E-01   9.0000E+02   9.9000E+01
9.5000E+01   9.5000E+01
   7.2000E+02   9.0000E+02   9.9000E+01
9.5000E+01   9.5000E+01
   0
   0
   0
   0
   0
   0
 Pathway 12:
   0
   0
   0
   0
   0
   1
   3
   0.0000E+00   2.0500E+03   1.0000E+02
1.0000E+02   1.0000E+02
   5.0000E-01   1.0250E+03   1.0000E+02
1.0000E+02   1.0000E+02
   7.2000E+02   1.0250E+03   1.0000E+02
1.0000E+02   1.0000E+02
   0
   0
   0
   0
   0
   0
   0
 Dose Locations:
   3
 Location 1:
 CR
   5
   0
   1
   2
```

```
  0.0000E+00   3.5000E-04
  7.2000E+02   3.5000E-04
  1
  4
  0.0000E+00   1.0000E+00
  2.4000E+01   6.0000E-01
  9.6000E+01   4.0000E-01
  7.2000E+02   4.0000E-01
Location 2:
EAB
  6
  1
  2
  0.0000E+00   1.7000E-04
  7.2000E+02   1.7000E-04
  1
  4
  0.0000E+00   3.5000E-04
  8.0000E+00   1.8000E-04
  2.4000E+01   2.3000E-04
  7.2000E+02   2.3000E-04
  0
Location 3:
LPZ
  6
  1
  5
  0.0000E+00   5.6000E-05
  8.0000E+00   1.3000E-05
  2.4000E+01   4.2000E-06
  9.6000E+01   9.0000E-07
  7.2000E+02   9.0000E-07
  1
  4
  0.0000E+00   3.5000E-04
  8.0000E+00   1.8000E-04
  2.4000E+01   2.3000E-04
  7.2000E+02   2.3000E-04
  0
Effective Volume Location:
  1
  7
  0.0000E+00   7.0300E-04
  5.0000E-01   6.1300E-04
  2.0000E+00   4.7100E-04
  8.0000E+00   2.4200E-04
  2.4000E+01   1.6600E-04
  9.6000E+01   1.2500E-04
  7.2000E+02   1.2500E-04
Simulation Parameters:
  6
  0.0000E+00   5.0000E-03
  4.0000E+00   5.0000E-01
  8.0000E+00   1.0000E+00
  2.4000E+01   2.0000E+00
  4.8000E+01   2.4000E+01
  7.2000E+02   0.0000E+00
Output Filename:
C:\Polestar\CGS QA\Radtrad Check\Columbia _2f.o0
  1
  1
  1
  1
  1
End of Scenario File
```

Columbia_2u.psf

```
Radtrad 3.02 1/5/2000
 Columbia AST - Intact Lines - Unfiltered
 Nuclide Inventory File:
 c:\polestar\cgs qa\radtrad check\columbia.nif
 Plant Power Level:
  3.5560E+03
 Compartments:
   7
 Compartment 1:
 DW
   3
  2.0050E+05
   1
   0
   0
   0
   0
 Compartment 2:
 WW
   3
  1.4420E+05
   0
   0
   0
   0
   0
   0
   0
Compartment 3:
RB
  3
 1.3920E+06
  0
  0
  0
  0
  0
Compartment 4:
SP
  3
 1.3730E+05
  0
  0
  0
  0
  0
Compartment 5:
CR
  1
 2.1400E+05
  0
  0
  0
  0
  0
Compartment 6:
Enviro
  2
 0.0000E+00
  0
  0
  0
  0
  0
Compartment 7:
Dummy
  3
 1.0000E+06
  0
  0
  0
  0
  0
Pathways:
 12
Pathway 1:
DW to WW
  1
  2
  2
Pathway 2:
WW to DW
  2
```

```
  1
  2
Pathway 3:
Failed SL to Dummy
  1
  7
  2
Pathway 4:
Intact SLs to Enviro
  1
  6
  2
Pathway 5:
DW to RB
  1
  3
  2
Pathway 6:
WW to RB
  2
  3
  2
Pathway 7:
Bypass DW to Dummy
  1
  7
  2
Pathway 8:
Bypass WW to Dummy
  2
  7
  2
Pathway 9:
SP to RB
  4
  3
  2
Pathway 10:
RB SGTS to Dummy
  3
  7
  2
Pathway 11:
Enviro to CR (unfiltered)
  6
  5
  2
Pathway 12:
CR to Enviro
  5
  6
  2
End of Plant Model File
Scenario Description Name:

Plant Model Filename:

Source Term:
  1
  1   1.0000E+00
c:\radtrad3.02a\defaults\fgr11&12.inp
c:\polestar\cgs qa\radtrad check\columbia.rft
  0.0000E+00
  1
  9.5000E-01   4.8500E-02   1.5000E-03
1.0000E+00
Overlying Pool:
  0
  0.0000E+00
  0
  0
  0
  0
Compartments:
  7
Compartment 1:
  0
  1
  1
  0.0000E+00
  5
  0.0000E+00   0.0000E+00
  2.5000E-01   6.2000E+00
  2.4400E+00   6.2000E-01
```

```
  2.4000E+01   0.0000E+00
  7.2000E+02   0.0000E+00
  1
  0.0000E+00
  5
  0.0000E+00   0.0000E+00
  2.5000E-01   6.2000E+00
  2.4400E+00   6.2000E-01
  2.4000E+01   0.0000E+00
  7.2000E+02   0.0000E+00
  1
  0.0000E+00
  0
  0
  0
  0
  0
Compartment 2:
  0
  1
  0
  0
  0
  0
  0
  0
  0
Compartment 3:
  0
  1
  0
  0
  0
  0
  0
  0
  0
Compartment 4:
  0
  1
  0
  0
  0
  0
  0
  0
  0
Compartment 5:
  0
  1
  0
  0
  0
  0
  0
  0
  0
Compartment 6:
  0
  1
  0
  0
  0
  0
  0
  0
  0
Compartment 7:
  0
  1
  0
  0
  0
  0
  0
  0
  0
Pathways:
 12
Pathway 1:
  0
  0
  0
  0
```

```
   0
   1
   3
   0.0000E+00   0.0000E+00   0.0000E+00
0.0000E+00   0.0000E+00
   2.0333E+00   1.4420E+05   0.0000E+00
0.0000E+00   0.0000E+00
   7.2000E+02   1.4420E+05   0.0000E+00
0.0000E+00   0.0000E+00
   0
   0
   0
   0
   0
   0
 Pathway 2:
   0
   0
   0
   0
   0
   1
   3
   0.0000E+00   0.0000E+00   0.0000E+00
0.0000E+00   0.0000E+00
   2.0333E+00   1.4420E+05   0.0000E+00
0.0000E+00   0.0000E+00
   7.2000E+02   1.4420E+05   0.0000E+00
0.0000E+00   0.0000E+00
   0
   0
   0
   0
   0
   0
   0
 Pathway 3:
   0
   0
   0
   0
   0
   1
   3
   0.0000E+00   9.9500E-02   0.0000E+00
0.0000E+00   0.0000E+00
   2.4000E+01   4.9800E-02   0.0000E+00
0.0000E+00   0.0000E+00
   7.2000E+02   4.9800E-02   0.0000E+00
0.0000E+00   0.0000E+00
   0
   0
   0
   0
   0
   0
 Pathway 4:
   0
   0
   0
   0
   0
   1
   3
   0.0000E+00   2.9900E-01   8.0400E+01
6.4800E+01   1.0000E-01
   2.4000E+01   1.4900E-01   8.0400E+01
6.4800E+01   1.0000E-01
   7.2000E+02   1.4900E-01   8.0400E+01
6.4800E+01   1.0000E-01
   0
   0
   0
   0
   0
   0
   0
   0
 Pathway 5:
   0
   0
   0
   0
   0
   1
   4
```

```
   0.0000E+00   0.0000E+00   0.0000E+00
0.0000E+00   0.0000E+00
   1.6700E-01   6.9600E-01   0.0000E+00
0.0000E+00   0.0000E+00
   2.4000E+01   3.4800E-01   0.0000E+00
0.0000E+00   0.0000E+00
   7.2000E+02   3.4800E-01   0.0000E+00
0.0000E+00   0.0000E+00
   0
   0
   0
   0
   0
   0
 Pathway 6:
   0
   0
   0
   0
   0
   1
   4
   0.0000E+00   0.0000E+00   0.0000E+00
0.0000E+00   0.0000E+00
   1.6700E-01   5.0000E-01   0.0000E+00
0.0000E+00   0.0000E+00
   2.4000E+01   2.5000E-01   0.0000E+00
0.0000E+00   0.0000E+00
   7.2000E+02   2.5000E-01   0.0000E+00
0.0000E+00   0.0000E+00
   0
   0
   0
   0
   0
   0
 Pathway 7:
   0
   0
   0
   0
   0
   1
   4
   0.0000E+00   7.5200E-01   0.0000E+00
0.0000E+00   0.0000E+00
   1.6700E-01   5.6000E-02   0.0000E+00
0.0000E+00   0.0000E+00
   2.4000E+01   2.8000E-02   0.0000E+00
0.0000E+00   0.0000E+00
   7.2000E+02   2.8000E-02   0.0000E+00
0.0000E+00   0.0000E+00
   0
   0
   0
   0
   0
   0
 Pathway 8:
   0
   0
   0
   0
   0
   1
   4
   0.0000E+00   5.4100E-01   0.0000E+00
0.0000E+00   0.0000E+00
   1.6700E-01   4.0000E-02   0.0000E+00
0.0000E+00   0.0000E+00
   2.4000E+01   2.0000E-02   0.0000E+00
0.0000E+00   0.0000E+00
   7.2000E+02   2.0000E-02   0.0000E+00
0.0000E+00   0.0000E+00
   0
   0
   0
   0
   0
   0
 Pathway 9:
   0
   0
   0
```

```
   0
   0
   1
   3
   0.0000E+00   0.0000E+00   0.0000E+00
0.0000E+00   0.0000E+00
   2.5000E-01   2.6800E-01   1.0000E+02
0.0000E+00   0.0000E+00
   7.2000E+02   2.6800E-01   1.0000E+02
0.0000E+00   0.0000E+00
   0
   0
   0
   0
   0
   0
 Pathway 10:
   0
   0
   0
   0
   0
   1
   3
   0.0000E+00   5.0000E+03   0.0000E+00
0.0000E+00   0.0000E+00
   1.6700E-01   5.0000E+03   9.8000E+01
9.8000E+01   9.8000E+01
   7.2000E+02   5.0000E+03   9.8000E+01
9.8000E+01   9.8000E+01
   0
   0
   0
   0
   0
   0
 Pathway 11:
   0
   0
   0
   0
   0
   1
   3
   0.0000E+00   2.5000E+02   0.0000E+00
0.0000E+00   0.0000E+00
   5.0000E-01   1.2500E+02   0.0000E+00
0.0000E+00   0.0000E+00
   7.2000E+02   1.2500E+02   0.0000E+00
0.0000E+00   0.0000E+00
   0
   0
   0
   0
   0
   0
 Pathway 12:
   0
   0
   0
   0
   0
   1
   3
   0.0000E+00   2.0500E+03   1.0000E+02
1.0000E+02   1.0000E+02
   5.0000E-01   1.0250E+03   1.0000E+02
1.0000E+02   1.0000E+02
   7.2000E+02   1.0250E+03   1.0000E+02
1.0000E+02   1.0000E+02
   0
   0
   0
   0
   0
   0
   0
 Dose Locations:
   3
 Location 1:
 CR
   5
   0
   1
   2
```

```
  0.0000E+00   3.5000E-04
  7.2000E+02   3.5000E-04
  1
  4
  0.0000E+00   1.0000E+00
  2.4000E+01   6.0000E-01
  9.6000E+01   4.0000E-01
  7.2000E+02   4.0000E-01
Location 2:
EAB
  6
  1
  2
  0.0000E+00   1.7000E-04
  7.2000E+02   1.7000E-04
  1
  4
  0.0000E+00   3.5000E-04
  8.0000E+00   1.8000E-04
  2.4000E+01   2.3000E-04
  7.2000E+02   2.3000E-04
  0
Location 3:
LPZ
  6
  1
  5
  0.0000E+00   5.6000E-05
  8.0000E+00   1.3000E-05
  2.4000E+01   4.2000E-06
  9.6000E+01   9.0000E-07
  7.2000E+02   9.0000E-07
  1
  4
  0.0000E+00   3.5000E-04
  8.0000E+00   1.8000E-04
  2.4000E+01   2.3000E-04
  7.2000E+02   2.3000E-04
  0
Effective Volume Location:
  1
  6
  0.0000E+00   3.1700E-03
  2.0000E+00   2.4000E-03
  8.0000E+00   1.1900E-03
  2.4000E+01   7.9100E-04
  9.6000E+01   5.8700E-04
  7.2000E+02   5.8700E-04
Simulation Parameters:
  6
  0.0000E+00   5.0000E-03
  4.0000E+00   5.0000E-01
  8.0000E+00   1.0000E+00
  2.4000E+01   2.0000E+00
  4.8000E+01   2.4000E+01
  7.2000E+02   0.0000E+00
Output Filename:
C:\Polestar\CGS QA\Radtrad Check\Columbia _2u.o0
  1
  1
  1
  1
  1
End of Scenario File
```

Columbia_3f.psf

```
Radtrad 3.02 1/5/2000
 Columbia AST - Bypass - Filtered
 Nuclide Inventory File:
 c:\polestar\cgs qa\radtrad check\columbia.nif
 Plant Power Level:
  3.5560E+03
 Compartments:
   7
 Compartment 1:
 DW
   3
  2.0050E+05
   1
   0
   0
   0
   0
 Compartment 2:
 WW
   3
  1.4420E+05
   0
   0
   0
   0
   0
 Compartment 3:
 RB
   3
  1.3920E+06
   0
   0
   0
   0
   0
 Compartment 4:
 SP
   3
  1.3730E+05
   0
   0
   0
   0
   0
 Compartment 5:
 CR
   1
  2.1400E+05
   0
   0
   0
   0
   0
 Compartment 6:
 Enviro
   2
  0.0000E+00
   0
   0
   0
   0
   0
 Compartment 7:
 Dummy
   3
  1.0000E+06
   0
   0
   0
   0
   0
 Pathways:
  12
 Pathway 1:
 DW to WW
   1
   2
   2
 Pathway 2:
 WW to DW
   2
```

```
  1
  2
Pathway 3:
Failed SL to Dummy
  1
  7
  2
Pathway 4:
Intact SLs to Dummy
  1
  7
  2
Pathway 5:
DW to RB
  1
  3
  2
Pathway 6:
WW to RB
  2
  3
  2
Pathway 7:
Bypass DW to Enviro
  1
  6
  2
Pathway 8:
Bypass WW to Enviro
  2
  6
  2
Pathway 9:
SP to RB
  4
  3
  2
Pathway 10:
RB SGTS to Dummy
  3
  7
  2
Pathway 11:
Enviro to CR (filtered)
  6
  5
  2
Pathway 12:
CR to Enviro
  5
  6
  2
End of Plant Model File
Scenario Description Name:

Plant Model Filename:

Source Term:
  1
  1   1.0000E+00
c:\radtrad3.02a\defaults\fgr11&12.inp
c:\polestar\cgs qa\radtrad check\columbia.rft
  0.0000E+00
  1
  9.5000E-01   4.8500E-02   1.5000E-03
1.0000E+00
Overlying Pool:
  0
  0.0000E+00
  0
  0
  0
  0
Compartments:
  7
Compartment 1:
  0
  1
  1
  0.0000E+00
  5
  0.0000E+00   0.0000E+00
  2.5000E-01   6.2000E+00
  2.4400E+00   6.2000E-01
```

```
  2.4000E+01   0.0000E+00
  7.2000E+02   0.0000E+00
  1
  0.0000E+00
  5
  0.0000E+00   0.0000E+00
  2.5000E-01   6.2000E+00
  2.4400E+00   6.2000E-01
  2.4000E+01   0.0000E+00
  7.2000E+02   0.0000E+00
  1
  0.0000E+00
  0
  0
  0
  0
  0
Compartment 2:
  0
  1
  0
  0
  0
  0
  0
  0
  0
Compartment 3:
  0
  1
  0
  0
  0
  0
  0
  0
  0
Compartment 4:
  0
  1
  0
  0
  0
  0
  0
  0
  0
Compartment 5:
  0
  1
  0
  0
  0
  0
  0
  0
  0
Compartment 6:
  0
  1
  0
  0
  0
  0
  0
  0
  0
Compartment 7:
  0
  1
  0
  0
  0
  0
  0
  0
  0
Pathways:
 12
Pathway 1:
  0
  0
  0
  0
```

```
   0
   1
   3
   0.0000E+00   0.0000E+00   0.0000E+00
0.0000E+00   0.0000E+00
   2.0333E+00   1.4420E+05   0.0000E+00
0.0000E+00   0.0000E+00
   7.2000E+02   1.4420E+05   0.0000E+00
0.0000E+00   0.0000E+00
   0
   0
   0
   0
   0
   0
 Pathway 2:
   0
   0
   0
   0
   0
   1
   3
   0.0000E+00   0.0000E+00   0.0000E+00
0.0000E+00   0.0000E+00
   2.0333E+00   1.4420E+05   0.0000E+00
0.0000E+00   0.0000E+00
   7.2000E+02   1.4420E+05   0.0000E+00
0.0000E+00   0.0000E+00
   0
   0
   0
   0
   0
   0
   0
Pathway 3:
   0
   0
   0
   0
   0
   1
   3
   0.0000E+00   9.9500E-02   0.0000E+00
0.0000E+00   0.0000E+00
   2.4000E+01   4.9800E-02   0.0000E+00
0.0000E+00   0.0000E+00
   7.2000E+02   4.9800E-02   0.0000E+00
0.0000E+00   0.0000E+00
   0
   0
   0
   0
   0
   0
 Pathway 4:
   0
   0
   0
   0
   0
   1
   3
   0.0000E+00   2.9900E-01   8.0400E+01
6.4800E+01   1.0000E-01
   2.4000E+01   1.4900E-01   8.0400E+01
6.4800E+01   1.0000E-01
   7.2000E+02   1.4900E-01   8.0400E+01
6.4800E+01   1.0000E-01
   0
   0
   0
   0
   0
   0
   0
   0
Pathway 5:
   0
   0
   0
   0
   0
   1
   4
```

```
   0.0000E+00   0.0000E+00   0.0000E+00
0.0000E+00   0.0000E+00
   1.6700E-01   6.9600E-01   0.0000E+00
0.0000E+00   0.0000E+00
   2.4000E+01   3.4800E-01   0.0000E+00
0.0000E+00   0.0000E+00
   7.2000E+02   3.4800E-01   0.0000E+00
0.0000E+00   0.0000E+00
   0
   0
   0
   0
   0
   0
 Pathway 6:
   0
   0
   0
   0
   0
   1
   4
   0.0000E+00   0.0000E+00   0.0000E+00
0.0000E+00   0.0000E+00
   1.6700E-01   5.0000E-01   0.0000E+00
0.0000E+00   0.0000E+00
   2.4000E+01   2.5000E-01   0.0000E+00
0.0000E+00   0.0000E+00
   7.2000E+02   2.5000E-01   0.0000E+00
0.0000E+00   0.0000E+00
   0
   0
   0
   0
   0
   0
 Pathway 7:
   0
   0
   0
   0
   0
   1
   4
   0.0000E+00   7.5200E-01   0.0000E+00
0.0000E+00   0.0000E+00
   1.6700E-01   5.6000E-02   0.0000E+00
0.0000E+00   0.0000E+00
   2.4000E+01   2.8000E-02   0.0000E+00
0.0000E+00   0.0000E+00
   7.2000E+02   2.8000E-02   0.0000E+00
0.0000E+00   0.0000E+00
   0
   0
   0
   0
   0
   0
 Pathway 8:
   0
   0
   0
   0
   0
   1
   4
   0.0000E+00   5.4100E-01   0.0000E+00
0.0000E+00   0.0000E+00
   1.6700E-01   4.0000E-02   0.0000E+00
0.0000E+00   0.0000E+00
   2.4000E+01   2.0000E-02   0.0000E+00
0.0000E+00   0.0000E+00
   7.2000E+02   2.0000E-02   0.0000E+00
0.0000E+00   0.0000E+00
   0
   0
   0
   0
   0
   0
 Pathway 9:
   0
   0
   0
```

```
   0
   0
   1
   3
   0.0000E+00   0.0000E+00   0.0000E+00
0.0000E+00   0.0000E+00
   2.5000E-01   2.6800E-01   1.0000E+02
0.0000E+00   0.0000E+00
   7.2000E+02   2.6800E-01   1.0000E+02
0.0000E+00   0.0000E+00
   0
   0
   0
   0
   0
   0
 Pathway 10:
   0
   0
   0
   0
   0
   1
   3
   0.0000E+00   5.0000E+03   0.0000E+00
0.0000E+00   0.0000E+00
   1.6700E-01   5.0000E+03   9.8000E+01
9.8000E+01   9.8000E+01
   7.2000E+02   5.0000E+03   9.8000E+01
9.8000E+01   9.8000E+01
   0
   0
   0
   0
   0
   0
 Pathway 11:
   0
   0
   0
   0
   0
   1
   3
   0.0000E+00   1.8000E+03   9.9000E+01
9.5000E+01   9.5000E+01
   5.0000E-01   9.0000E+02   9.9000E+01
9.5000E+01   9.5000E+01
   7.2000E+02   9.0000E+02   9.9000E+01
9.5000E+01   9.5000E+01
   0
   0
   0
   0
   0
   0
 Pathway 12:
   0
   0
   0
   0
   0
   1
   3
   0.0000E+00   2.0500E+03   1.0000E+02
1.0000E+02   1.0000E+02
   5.0000E-01   1.0250E+03   1.0000E+02
1.0000E+02   1.0000E+02
   7.2000E+02   1.0250E+03   1.0000E+02
1.0000E+02   1.0000E+02
   0
   0
   0
   0
   0
   0
   0
   0
   0
Dose Locations:
   3
Location 1:
CR
   5
   0
   1
   2
```

```
  0.0000E+00   3.5000E-04
  7.2000E+02   3.5000E-04
  1
  4
  0.0000E+00   1.0000E+00
  2.4000E+01   6.0000E-01
  9.6000E+01   4.0000E-01
  7.2000E+02   4.0000E-01
Location 2:
EAB
  6
  1
  2
  0.0000E+00   1.7000E-04
  7.2000E+02   1.7000E-04
  1
  4
  0.0000E+00   3.5000E-04
  8.0000E+00   1.8000E-04
  2.4000E+01   2.3000E-04
  7.2000E+02   2.3000E-04
  0
Location 3:
LPZ
  6
  1
  5
  0.0000E+00   5.6000E-05
  8.0000E+00   1.3000E-05
  2.4000E+01   4.2000E-06
  9.6000E+01   9.0000E-07
  7.2000E+02   9.0000E-07
  1
  4
  0.0000E+00   3.5000E-04
  8.0000E+00   1.8000E-04
  2.4000E+01   2.3000E-04
  7.2000E+02   2.3000E-04
  0
Effective Volume Location:
  1
  7
  0.0000E+00   4.1300E-04
  5.0000E-01   4.0300E-04
  2.0000E+00   1.7000E-04
  8.0000E+00   8.2100E-05
  2.4000E+01   5.7700E-05
  9.6000E+01   4.8700E-05
  7.2000E+02   4.8700E-05
Simulation Parameters:
  6
  0.0000E+00   5.0000E-03
  4.0000E+00   5.0000E-01
  8.0000E+00   1.0000E+00
  2.4000E+01   2.0000E+00
  4.8000E+01   2.4000E+01
  7.2000E+02   0.0000E+00
Output Filename:
C:\Polestar\CGS QA\Radtrad Check\Columbia _3f.o0
  1
  1
  1
  1
  1
End of Scenario File
```

Columbia_3u.psf

```
Radtrad 3.02 1/5/2000
 Columbia AST - Bypass - Unfiltered
 Nuclide Inventory File:
 c:\polestar\cgs qa\radtrad check\columbia.nif
 Plant Power Level:
  3.5560E+03
 Compartments:
   7
 Compartment 1:
 DW
   3
  2.0050E+05
   1
   0
   0
   0
   0
 Compartment 2:
 WW
   3
  1.4420E+05
   0
   0
   0
   0
   0
   0
 Compartment 3:
 RB
   3
  1.3920E+06
   0
   0
   0
   0
   0
 Compartment 4:
 SP
   3
  1.3730E+05
   0
   0
   0
   0
   0
 Compartment 5:
 CR
   1
  2.1400E+05
   0
   0
   0
   0
   0
 Compartment 6:
 Enviro
   2
  0.0000E+00
   0
   0
   0
   0
   0
 Compartment 7:
 Dummy
   3
  1.0000E+06
   0
   0
   0
   0
   0
 Pathways:
  12
 Pathway 1:
 DW to WW
   1
   2
   2
 Pathway 2:
 WW to DW
   2
```

```
  1
  2
Pathway 3:
Failed SL to Dummy
  1
  7
  2
Pathway 4:
Intact SLs to Dummy
  1
  7
  2
Pathway 5:
DW to RB
  1
  3
  2
Pathway 6:
WW to RB
  2
  3
  2
Pathway 7:
Bypass DW to Enviro
  1
  6
  2
Pathway 8:
Bypass WW to Enviro
  2
  6
  2
Pathway 9:
SP to RB
  4
  3
  2
Pathway 10:
RB SGTS to Dummy
  3
  7
  2
Pathway 11:
Enviro to CR (unfiltered)
  6
  5
  2
Pathway 12:
CR to Enviro
  5
  6
  2
End of Plant Model File
Scenario Description Name:

Plant Model Filename:

Source Term:
  1
  1   1.0000E+00
c:\radtrad3.02a\defaults\fgr11&12.inp
c:\polestar\cgs qa\radtrad check\columbia.rft
  0.0000E+00
  1
  9.5000E-01   4.8500E-02   1.5000E-03
1.0000E+00
Overlying Pool:
  0
  0.0000E+00
  0
  0
  0
  0
  0
Compartments:
  7
Compartment 1:
  0
  1
  1
  0.0000E+00
  5
  0.0000E+00   0.0000E+00
  2.5000E-01   6.2000E+00
  2.4400E+00   6.2000E-01
```

```
  2.4000E+01   0.0000E+00
  7.2000E+02   0.0000E+00
  1
  0.0000E+00
  5
  0.0000E+00   0.0000E+00
  2.5000E-01   6.2000E+00
  2.4400E+00   6.2000E-01
  2.4000E+01   0.0000E+00
  7.2000E+02   0.0000E+00
  1
  0.0000E+00
  0
  0
  0
  0
  0
Compartment 2:
  0
  1
  0
  0
  0
  0
  0
  0
  0
Compartment 3:
  0
  1
  0
  0
  0
  0
  0
  0
  0
Compartment 4:
  0
  1
  0
  0
  0
  0
  0
  0
  0
Compartment 5:
  0
  1
  0
  0
  0
  0
  0
  0
  0
Compartment 6:
  0
  1
  0
  0
  0
  0
  0
  0
  0
Compartment 7:
  0
  1
  0
  0
  0
  0
  0
  0
  0
Pathways:
 12
Pathway 1:
  0
  0
  0
  0
```

```
   0
   1
   3
   0.0000E+00   0.0000E+00   0.0000E+00
0.0000E+00   0.0000E+00
   2.0333E+00   1.4420E+05   0.0000E+00
0.0000E+00   0.0000E+00
   7.2000E+02   1.4420E+05   0.0000E+00
0.0000E+00   0.0000E+00
   0
   0
   0
   0
   0
   0
 Pathway 2:
   0
   0
   0
   0
   0
   1
   3
   0.0000E+00   0.0000E+00   0.0000E+00
0.0000E+00   0.0000E+00
   2.0333E+00   1.4420E+05   0.0000E+00
0.0000E+00   0.0000E+00
   7.2000E+02   1.4420E+05   0.0000E+00
0.0000E+00   0.0000E+00
   0
   0
   0
   0
   0
   0
 Pathway 3:
   0
   0
   0
   0
   0
   1
   3
   0.0000E+00   9.9500E-02   0.0000E+00
0.0000E+00   0.0000E+00
   2.4000E+01   4.9800E-02   0.0000E+00
0.0000E+00   0.0000E+00
   7.2000E+02   4.9800E-02   0.0000E+00
0.0000E+00   0.0000E+00
   0
   0
   0
   0
   0
   0
 Pathway 4:
   0
   0
   0
   0
   0
   1
   3
   0.0000E+00   2.9900E-01   8.0400E+01
6.4800E+01   1.0000E-01
   2.4000E+01   1.4900E-01   8.0400E+01
6.4800E+01   1.0000E-01
   7.2000E+02   1.4900E-01   8.0400E+01
6.4800E+01   1.0000E-01
   0
   0
   0
   0
   0
   0
   0
   0
 Pathway 5:
   0
   0
   0
   0
   0
   1
   4
```

```
   0.0000E+00   0.0000E+00   0.0000E+00
0.0000E+00   0.0000E+00
   1.6700E-01   6.9600E-01   0.0000E+00
0.0000E+00   0.0000E+00
   2.4000E+01   3.4800E-01   0.0000E+00
0.0000E+00   0.0000E+00
   7.2000E+02   3.4800E-01   0.0000E+00
0.0000E+00   0.0000E+00
   0
   0
   0
   0
   0
   0
 Pathway 6:
   0
   0
   0
   0
   0
   1
   4
   0.0000E+00   0.0000E+00   0.0000E+00
0.0000E+00   0.0000E+00
   1.6700E-01   5.0000E-01   0.0000E+00
0.0000E+00   0.0000E+00
   2.4000E+01   2.5000E-01   0.0000E+00
0.0000E+00   0.0000E+00
   7.2000E+02   2.5000E-01   0.0000E+00
0.0000E+00   0.0000E+00
   0
   0
   0
   0
   0
   0
 Pathway 7:
   0
   0
   0
   0
   0
   1
   4
   0.0000E+00   7.5200E-01   0.0000E+00
0.0000E+00   0.0000E+00
   1.6700E-01   5.6000E-02   0.0000E+00
0.0000E+00   0.0000E+00
   2.4000E+01   2.8000E-02   0.0000E+00
0.0000E+00   0.0000E+00
   7.2000E+02   2.8000E-02   0.0000E+00
0.0000E+00   0.0000E+00
   0
   0
   0
   0
   0
   0
 Pathway 8:
   0
   0
   0
   0
   0
   1
   4
   0.0000E+00   5.4100E-01   0.0000E+00
0.0000E+00   0.0000E+00
   1.6700E-01   4.0000E-02   0.0000E+00
0.0000E+00   0.0000E+00
   2.4000E+01   2.0000E-02   0.0000E+00
0.0000E+00   0.0000E+00
   2.4000E+01   2.0000E-02   0.0000E+00
0.0000E+00   0.0000E+00
   7.2000E+02   2.0000E-02   0.0000E+00
0.0000E+00   0.0000E+00
   0
   0
   0
   0
   0
   0
 Pathway 9:
   0
   0
   0
```

```
   0
   0
   1
   3
   0.0000E+00   0.0000E+00   0.0000E+00
0.0000E+00   0.0000E+00
   2.5000E-01   2.6800E-01   1.0000E+02
0.0000E+00   0.0000E+00
   7.2000E+02   2.6800E-01   1.0000E+02
0.0000E+00   0.0000E+00
   0
   0
   0
   0
   0
   0
 Pathway 10:
   0
   0
   0
   0
   0
   1
   3
   0.0000E+00   5.0000E+03   0.0000E+00
0.0000E+00   0.0000E+00
   1.6700E-01   5.0000E+03   9.8000E+01
9.8000E+01   9.8000E+01
   7.2000E+02   5.0000E+03   9.8000E+01
9.8000E+01   9.8000E+01
   0
   0
   0
   0
   0
   0
 Pathway 11:
   0
   0
   0
   0
   0
   1
   3
   0.0000E+00   2.5000E+02   0.0000E+00
0.0000E+00   0.0000E+00
   5.0000E-01   1.2500E+02   0.0000E+00
0.0000E+00   0.0000E+00
   7.2000E+02   1.2500E+02   0.0000E+00
0.0000E+00   0.0000E+00
   0
   0
   0
   0
   0
   0
 Pathway 12:
   0
   0
   0
   0
   0
   1
   3
   0.0000E+00   2.0500E+03   1.0000E+02
1.0000E+02   1.0000E+02
   5.0000E-01   1.0250E+03   1.0000E+02
1.0000E+02   1.0000E+02
   7.2000E+02   1.0250E+03   1.0000E+02
1.0000E+02   1.0000E+02
   0
   0
   0
   0
   0
   0
   0
 Dose Locations:
   3
 Location 1:
 CR
   5
   0
   1
   2
```

```
  0.0000E+00   3.5000E-04
  7.2000E+02   3.5000E-04
  1
  4
  0.0000E+00   1.0000E+00
  2.4000E+01   6.0000E-01
  9.6000E+01   4.0000E-01
  7.2000E+02   4.0000E-01
Location 2:
EAB
  6
  1
  2
  0.0000E+00   1.7000E-04
  7.2000E+02   1.7000E-04
  1
  4
  0.0000E+00   3.5000E-04
  8.0000E+00   1.8000E-04
  2.4000E+01   2.3000E-04
  7.2000E+02   2.3000E-04
  0
Location 3:
LPZ
  6
  1
  5
  0.0000E+00   5.6000E-05
  8.0000E+00   1.3000E-05
  2.4000E+01   4.2000E-06
  9.6000E+01   9.0000E-07
  7.2000E+02   9.0000E-07
  1
  4
  0.0000E+00   3.5000E-04
  8.0000E+00   1.8000E-04
  2.4000E+01   2.3000E-04
  7.2000E+02   2.3000E-04
  0
Effective Volume Location:
  1
  6
  0.0000E+00   6.8000E-04
  2.0000E+00   4.9200E-04
  8.0000E+00   2.5300E-04
  2.4000E+01   1.4500E-04
  9.6000E+01   1.1900E-04
  7.2000E+02   1.1900E-04
Simulation Parameters:
  6
  0.0000E+00   5.0000E-03
  4.0000E+00   5.0000E-01
  8.0000E+00   1.0000E+00
  2.4000E+01   2.0000E+00
  4.8000E+01   2.4000E+01
  7.2000E+02   0.0000E+00
Output Filename:
C:\Polestar\CGS QA\Radtrad Check\Columbia _3u.o0
  1
  1
  1
  1
  1
End of Scenario File
```

Columbia_4f.psf

```
Radtrad 3.02 1/5/2000
 Columbia AST - SGTS - Filtered
 Nuclide Inventory File:
 c:\polestar\cgs qa\radtrad check\columbia.nif
 Plant Power Level:
  3.5560E+03
 Compartments:
   7
 Compartment 1:
 DW
   3
  2.0050E+05
   1
   0
   0
   0
   0
 Compartment 2:
 WW
   3
  1.4420E+05
   0
   0
   0
   0
   0
 Compartment 3:
 RB
   3
  1.3920E+06
   0
   0
   0
   0
   0
Compartment 4:
SP
  3
 1.3730E+05
   0
   0
   0
   0
   0
Compartment 5:
CR
  1
 2.1400E+05
  0
  0
  0
  0
  0
Compartment 6:
Enviro
  2
 0.0000E+00
  0
  0
  0
  0
  0
Compartment 7:
Dummy
  3
 1.0000E+06
  0
  0
  0
  0
  0
  0
Pathways:
 12
Pathway 1:
DW to WW
  1
  2
  2
Pathway 2:
WW to DW
  2
```

```
  1
  2
Pathway 3:
Failed SL to Dummy
  1
  7
  2
Pathway 4:
Intact SLs to Dummy
  1
  7
  2
Pathway 5:
DW to RB
  1
  3
  2
Pathway 6:
WW to RB
  2
  3
  2
Pathway 7:
Bypass DW to Dummy
  1
  7
  2
Pathway 8:
Bypass WW to Dummy
  2
  7
  2
Pathway 9:
SP to RB
  4
  3
  2
Pathway 10:
RB SGTS to Enviro
  3
  6
  2
Pathway 11:
Enviro to CR (filtered)
  6
  5
  2
Pathway 12:
CR to Enviro
  5
  6
  2
End of Plant Model File
Scenario Description Name:

Plant Model Filename:

Source Term:
  1
  1   1.0000E+00
c:\radtrad3.02a\defaults\fgr11&12.inp
c:\polestar\cgs qa\radtrad check\columbia.rft
  0.0000E+00
  1
  9.5000E-01   4.8500E-02   1.5000E-03
1.0000E+00
Overlying Pool:
  0
  0.0000E+00
  0
  0
  0
  0
Compartments:
  7
Compartment 1:
  0
  1
  1
  0.0000E+00
  5
  0.0000E+00   0.0000E+00
  2.5000E-01   6.2000E+00
  2.4400E+00   6.2000E-01
```

```
  2.4000E+01   0.0000E+00
  7.2000E+02   0.0000E+00
  1
  0.0000E+00
  5
  0.0000E+00   0.0000E+00
  2.5000E-01   6.2000E+00
  2.4400E+00   6.2000E-01
  2.4000E+01   0.0000E+00
  7.2000E+02   0.0000E+00
  1
  0.0000E+00
  0
  0
  0
  0
  0
Compartment 2:
  0
  1
  0
  0
  0
  0
  0
  0
  0
Compartment 3:
  0
  1
  0
  0
  0
  0
  0
  0
  0
Compartment 4:
  0
  1
  0
  0
  0
  0
  0
  0
  0
Compartment 5:
  0
  1
  0
  0
  0
  0
  0
  0
  0
Compartment 6:
  0
  1
  0
  0
  0
  0
  0
  0
  0
Compartment 7:
  0
  1
  0
  0
  0
  0
  0
  0
  0
Pathways:
 12
Pathway 1:
  0
  0
  0
  0
```

```
   0
   1
   3
   0.0000E+00   0.0000E+00   0.0000E+00
0.0000E+00   0.0000E+00
   2.0333E+00   1.4420E+05   0.0000E+00
0.0000E+00   0.0000E+00
   7.2000E+02   1.4420E+05   0.0000E+00
0.0000E+00   0.0000E+00
   0
   0
   0
   0
   0
   0
 Pathway 2:
   0
   0
   0
   0
   0
   1
   3
   0.0000E+00   0.0000E+00   0.0000E+00
0.0000E+00   0.0000E+00
   2.0333E+00   1.4420E+05   0.0000E+00
0.0000E+00   0.0000E+00
   7.2000E+02   1.4420E+05   0.0000E+00
0.0000E+00   0.0000E+00
   0
   0
   0
   0
   0
   0
 Pathway 3:
   0
   0
   0
   0
   0
   1
   3
   0.0000E+00   9.9500E-02   0.0000E+00
0.0000E+00   0.0000E+00
   2.4000E+01   4.9800E-02   0.0000E+00
0.0000E+00   0.0000E+00
   7.2000E+02   4.9800E-02   0.0000E+00
0.0000E+00   0.0000E+00
   0
   0
   0
   0
   0
   0
 Pathway 4:
   0
   0
   0
   0
   0
   1
   3
   0.0000E+00   2.9900E-01   8.0400E+01
6.4800E+01   1.0000E-01
   2.4000E+01   1.4900E-01   8.0400E+01
6.4800E+01   1.0000E-01
   7.2000E+02   1.4900E-01   8.0400E+01
6.4800E+01   1.0000E-01
   0
   0
   0
   0
   0
   0
   0
   0
 Pathway 5:
   0
   0
   0
   0
   0
   1
   4
```

```
   0.0000E+00   0.0000E+00   0.0000E+00
0.0000E+00   0.0000E+00
   1.6700E-01   6.9600E-01   0.0000E+00
0.0000E+00   0.0000E+00
   2.4000E+01   3.4800E-01   0.0000E+00
0.0000E+00   0.0000E+00
   7.2000E+02   3.4800E-01   0.0000E+00
0.0000E+00   0.0000E+00
   0
   0
   0
   0
   0
   0
 Pathway 6:
   0
   0
   0
   0
   0
   1
   4
   0.0000E+00   0.0000E+00   0.0000E+00
0.0000E+00   0.0000E+00
   1.6700E-01   5.0000E-01   0.0000E+00
0.0000E+00   0.0000E+00
   2.4000E+01   2.5000E-01   0.0000E+00
0.0000E+00   0.0000E+00
   7.2000E+02   2.5000E-01   0.0000E+00
0.0000E+00   0.0000E+00
   0
   0
   0
   0
   0
   0
   0
 Pathway 7:
   0
   0
   0
   0
   0
   1
   4
   0.0000E+00   7.5200E-01   0.0000E+00
0.0000E+00   0.0000E+00
   1.6700E-01   5.6000E-02   0.0000E+00
0.0000E+00   0.0000E+00
   2.4000E+01   2.8000E-02   0.0000E+00
0.0000E+00   0.0000E+00
   7.2000E+02   2.8000E-02   0.0000E+00
0.0000E+00   0.0000E+00
   0
   0
   0
   0
   0
   0
 Pathway 8:
   0
   0
   0
   0
   0
   1
   4
   0.0000E+00   5.4100E-01   0.0000E+00
0.0000E+00   0.0000E+00
   1.6700E-01   4.0000E-02   0.0000E+00
0.0000E+00   0.0000E+00
   2.4000E+01   2.0000E-02   0.0000E+00
0.0000E+00   0.0000E+00
   7.2000E+02   2.0000E-02   0.0000E+00
0.0000E+00   0.0000E+00
   7.2000E+02   2.0000E-02   0.0000E+00
0.0000E+00   0.0000E+00
   0
   0
   0
   0
   0
   0
 Pathway 9:
   0
   0
   0
```

```
   0
   0
   1
   3
   0.0000E+00   0.0000E+00   0.0000E+00
0.0000E+00   0.0000E+00
   2.5000E-01   2.6800E-01   1.0000E+02
0.0000E+00   0.0000E+00
   7.2000E+02   2.6800E-01   1.0000E+02
0.0000E+00   0.0000E+00
   0
   0
   0
   0
   0
   0
 Pathway 10:
   0
   0
   0
   0
   0
   1
   3
   0.0000E+00   5.0000E+03   0.0000E+00
0.0000E+00   0.0000E+00
   1.6700E-01   5.0000E+03   9.8000E+01
9.8000E+01   9.8000E+01
   7.2000E+02   5.0000E+03   9.8000E+01
9.8000E+01   9.8000E+01
   0
   0
   0
   0
   0
   0
 Pathway 11:
   0
   0
   0
   0
   0
   1
   3
   0.0000E+00   1.8000E+03   9.9000E+01
9.5000E+01   9.5000E+01
   5.0000E-01   9.0000E+02   9.9000E+01
9.5000E+01   9.5000E+01
   7.2000E+02   9.0000E+02   9.9000E+01
9.5000E+01   9.5000E+01
   0
   0
   0
   0
   0
   0
 Pathway 12:
   0
   0
   0
   0
   0
   1
   3
   0.0000E+00   2.0500E+03   1.0000E+02
1.0000E+02   1.0000E+02
   5.0000E-01   1.0250E+03   1.0000E+02
1.0000E+02   1.0000E+02
   7.2000E+02   1.0250E+03   1.0000E+02
1.0000E+02   1.0000E+02
   0
   0
   0
   0
   0
   0
   0
 Dose Locations:
   3
 Location 1:
 CR
   5
   0
   1
   2
```

```
  0.0000E+00   3.5000E-04
  7.2000E+02   3.5000E-04
  1
  4
  0.0000E+00   1.0000E+00
  2.4000E+01   6.0000E-01
  9.6000E+01   4.0000E-01
  7.2000E+02   4.0000E-01
Location 2:
EAB
  6
  1
  2
  0.0000E+00   1.7000E-04
  7.2000E+02   1.7000E-04
  1
  4
  0.0000E+00   3.5000E-04
  8.0000E+00   1.8000E-04
  2.4000E+01   2.3000E-04
  7.2000E+02   2.3000E-04
  0
Location 3:
LPZ
  6
  1
  5
  0.0000E+00   5.6000E-05
  8.0000E+00   1.3000E-05
  2.4000E+01   4.2000E-06
  9.6000E+01   9.0000E-07
  7.2000E+02   9.0000E-07
  1
  4
  0.0000E+00   3.5000E-04
  8.0000E+00   1.8000E-04
  2.4000E+01   2.3000E-04
  7.2000E+02   2.3000E-04
  0
Effective Volume Location:
  1
  7
  0.0000E+00   2.4100E-04
  5.0000E-01   2.2900E-04
  2.0000E+00   9.4700E-05
  8.0000E+00   5.1700E-05
  2.4000E+01   3.9700E-05
  9.6000E+01   3.0500E-05
  7.2000E+02   3.0500E-05
Simulation Parameters:
  6
  0.0000E+00   5.0000E-03
  4.0000E+00   5.0000E-01
  8.0000E+00   1.0000E+00
  2.4000E+01   2.0000E+00
  4.8000E+01   2.4000E+01
  7.2000E+02   0.0000E+00
Output Filename:
C:\Polestar\CGS QA\Radtrad Check\Columbia _4f.o0
  1
  1
  1
  1
  1
End of Scenario File
```

Columbia_4u.psf

```
Radtrad 3.02 1/5/2000
 Columbia AST - SGTS - Unfiltered
 Nuclide Inventory File:
 c:\polestar\cgs qa\radtrad check\columbia.nif
 Plant Power Level:
  3.5560E+03
 Compartments:
   7
 Compartment 1:
 DW
   3
  2.0050E+05
   1
   0
   0
   0
   0
 Compartment 2:
 WW
   3
  1.4420E+05
   0
   0
   0
   0
   0
 Compartment 3:
 RB
   3
  1.3920E+06
   0
   0
   0
   0
   0
Compartment 4:
SP
  3
 1.3730E+05
   0
   0
   0
   0
   0
Compartment 5:
CR
  1
 2.1400E+05
  0
  0
  0
  0
  0
Compartment 6:
Enviro
  2
 0.0000E+00
  0
  0
  0
  0
  0
Compartment 7:
Dummy
  3
 1.0000E+06
  0
  0
  0
  0
  0
  0
  0
Pathways:
 12
Pathway 1:
DW to WW
  1
  2
  2
Pathway 2:
WW to DW
  2
```

```
  1
  2
Pathway 3:
Failed SL to Dummy
  1
  7
  2
Pathway 4:
Intact SLs to Dummy
  1
  7
  2
Pathway 5:
DW to RB
  1
  3
  2
Pathway 6:
WW to RB
  2
  3
  2
Pathway 7:
Bypass DW to Dummy
  1
  7
  2
Pathway 8:
Bypass WW to Dummy
  2
  7
  2
Pathway 9:
SP to RB
  4
  3
  2
Pathway 10:
RB SGTS to Enviro
  3
  6
  2
Pathway 11:
Enviro to CR (unfiltered)
  6
  5
  2
Pathway 12:
CR to Enviro
  5
  6
  2
End of Plant Model File
Scenario Description Name:

Plant Model Filename:

Source Term:
  1
  1   1.0000E+00
c:\radtrad3.02a\defaults\fgr11&12.inp
c:\polestar\cgs qa\radtrad check\columbia.rft
  0.0000E+00
  1
  9.5000E-01   4.8500E-02   1.5000E-03
1.0000E+00
Overlying Pool:
  0
  0.0000E+00
  0
  0
  0
  0
  0
Compartments:
  7
Compartment 1:
  0
  1
  1
  0.0000E+00
  5
  0.0000E+00   0.0000E+00
  2.5000E-01   6.2000E+00
  2.4400E+00   6.2000E-01
```

```
  2.4000E+01   0.0000E+00
  7.2000E+02   0.0000E+00
  1
  0.0000E+00
  5
  0.0000E+00   0.0000E+00
  2.5000E-01   6.2000E+00
  2.4400E+00   6.2000E-01
  2.4000E+01   0.0000E+00
  7.2000E+02   0.0000E+00
  1
  0.0000E+00
  0
  0
  0
  0
  0
Compartment 2:
  0
  1
  0
  0
  0
  0
  0
  0
  0
Compartment 3:
  0
  1
  0
  0
  0
  0
  0
  0
  0
Compartment 4:
  0
  1
  0
  0
  0
  0
  0
  0
  0
Compartment 5:
  0
  1
  0
  0
  0
  0
  0
  0
  0
Compartment 6:
  0
  1
  0
  0
  0
  0
  0
  0
  0
Compartment 7:
  0
  1
  0
  0
  0
  0
  0
  0
  0
Pathways:
 12
Pathway 1:
  0
  0
  0
  0
```

```
   0
   1
   3
   0.0000E+00   0.0000E+00   0.0000E+00
0.0000E+00   0.0000E+00
   2.0333E+00   1.4420E+05   0.0000E+00
0.0000E+00   0.0000E+00
   7.2000E+02   1.4420E+05   0.0000E+00
0.0000E+00   0.0000E+00
   0
   0
   0
   0
   0
   0
 Pathway 2:
   0
   0
   0
   0
   0
   1
   3
   0.0000E+00   0.0000E+00   0.0000E+00
0.0000E+00   0.0000E+00
   2.0333E+00   1.4420E+05   0.0000E+00
0.0000E+00   0.0000E+00
   7.2000E+02   1.4420E+05   0.0000E+00
0.0000E+00   0.0000E+00
   0
   0
   0
   0
   0
   0
 Pathway 3:
   0
   0
   0
   0
   0
   1
   3
   0.0000E+00   9.9500E-02   0.0000E+00
0.0000E+00   0.0000E+00
   2.4000E+01   4.9800E-02   0.0000E+00
0.0000E+00   0.0000E+00
   7.2000E+02   4.9800E-02   0.0000E+00
0.0000E+00   0.0000E+00
   0
   0
   0
   0
   0
   0
 Pathway 4:
   0
   0
   0
   0
   0
   1
   3
   0.0000E+00   2.9900E-01   8.0400E+01
6.4800E+01   1.0000E-01
   2.4000E+01   1.4900E-01   8.0400E+01
6.4800E+01   1.0000E-01
   7.2000E+02   1.4900E-01   8.0400E+01
6.4800E+01   1.0000E-01
   0
   0
   0
   0
   0
   0
   0
   0
 Pathway 5:
   0
   0
   0
   0
   0
   1
   4
```

```
   0.0000E+00   0.0000E+00   0.0000E+00
0.0000E+00   0.0000E+00
   1.6700E-01   6.9600E-01   0.0000E+00
0.0000E+00   0.0000E+00
   2.4000E+01   3.4800E-01   0.0000E+00
0.0000E+00   0.0000E+00
   7.2000E+02   3.4800E-01   0.0000E+00
0.0000E+00   0.0000E+00
   0
   0
   0
   0
   0
   0
 Pathway 6:
   0
   0
   0
   0
   0
   1
   4
   0.0000E+00   0.0000E+00   0.0000E+00
0.0000E+00   0.0000E+00
   1.6700E-01   5.0000E-01   0.0000E+00
0.0000E+00   0.0000E+00
   2.4000E+01   2.5000E-01   0.0000E+00
0.0000E+00   0.0000E+00
   7.2000E+02   2.5000E-01   0.0000E+00
0.0000E+00   0.0000E+00
   0
   0
   0
   0
   0
   0
 Pathway 7:
   0
   0
   0
   0
   0
   1
   4
   0.0000E+00   7.5200E-01   0.0000E+00
0.0000E+00   0.0000E+00
   1.6700E-01   5.6000E-02   0.0000E+00
0.0000E+00   0.0000E+00
   2.4000E+01   2.8000E-02   0.0000E+00
0.0000E+00   0.0000E+00
   7.2000E+02   2.8000E-02   0.0000E+00
0.0000E+00   0.0000E+00
   0
   0
   0
   0
   0
   0
 Pathway 8:
   0
   0
   0
   0
   0
   1
   4
   0.0000E+00   5.4100E-01   0.0000E+00
0.0000E+00   0.0000E+00
   1.6700E-01   4.0000E-02   0.0000E+00
0.0000E+00   0.0000E+00
   2.4000E+01   2.0000E-02   0.0000E+00
0.0000E+00   0.0000E+00
   7.2000E+02   2.0000E-02   0.0000E+00
0.0000E+00   0.0000E+00
   0
   0
   0
   0
   0
   0
 Pathway 9:
   0
   0
   0
```

```
   0
   0
   1
   3
   0.0000E+00   0.0000E+00   0.0000E+00
0.0000E+00   0.0000E+00
   2.5000E-01   2.6800E-01   1.0000E+02
0.0000E+00   0.0000E+00
   7.2000E+02   2.6800E-01   1.0000E+02
0.0000E+00   0.0000E+00
   0
   0
   0
   0
   0
   0
 Pathway 10:
   0
   0
   0
   0
   0
   1
   3
   0.0000E+00   5.0000E+03   0.0000E+00
0.0000E+00   0.0000E+00
   1.6700E-01   5.0000E+03   9.8000E+01
9.8000E+01   9.8000E+01
   7.2000E+02   5.0000E+03   9.8000E+01
9.8000E+01   9.8000E+01
   0
   0
   0
   0
   0
   0
 Pathway 11:
   0
   0
   0
   0
   0
   1
   3
   0.0000E+00   2.5000E+02   0.0000E+00
0.0000E+00   0.0000E+00
   5.0000E-01   1.2500E+02   0.0000E+00
0.0000E+00   0.0000E+00
   7.2000E+02   1.2500E+02   0.0000E+00
0.0000E+00   0.0000E+00
   0
   0
   0
   0
   0
   0
 Pathway 12:
   0
   0
   0
   0
   0
   1
   3
   0.0000E+00   2.0500E+03   1.0000E+02
1.0000E+02   1.0000E+02
   5.0000E-01   1.0250E+03   1.0000E+02
1.0000E+02   1.0000E+02
   7.2000E+02   1.0250E+03   1.0000E+02
1.0000E+02   1.0000E+02
   0
   0
   0
   0
   0
   0
   0
 Dose Locations:
   3
 Location 1:
 CR
   5
   0
   1
   2
```

```
  0.0000E+00   3.5000E-04
  7.2000E+02   3.5000E-04
  1
  4
  0.0000E+00   1.0000E+00
  2.4000E+01   6.0000E-01
  9.6000E+01   4.0000E-01
  7.2000E+02   4.0000E-01
Location 2:
EAB
  6
  1
  2
  0.0000E+00   1.7000E-04
  7.2000E+02   1.7000E-04
  1
  4
  0.0000E+00   3.5000E-04
  8.0000E+00   1.8000E-04
  2.4000E+01   2.3000E-04
  7.2000E+02   2.3000E-04
  0
Location 3:
LPZ
  6
  1
  5
  0.0000E+00   5.6000E-05
  8.0000E+00   1.3000E-05
  2.4000E+01   4.2000E-06
  9.6000E+01   9.0000E-07
  7.2000E+02   9.0000E-07
  1
  4
  0.0000E+00   3.5000E-04
  8.0000E+00   1.8000E-04
  2.4000E+01   2.3000E-04
  7.2000E+02   2.3000E-04
  0
Effective Volume Location:
  1
  6
  0.0000E+00   5.7900E-04
  2.0000E+00   2.8600E-04
  8.0000E+00   1.7900E-04
  2.4000E+01   1.2500E-04
  9.6000E+01   9.1500E-05
  7.2000E+02   9.1500E-05
Simulation Parameters:
  6
  0.0000E+00   5.0000E-03
  4.0000E+00   5.0000E-01
  8.0000E+00   1.0000E+00
  2.4000E+01   2.0000E+00
  4.8000E+01   2.4000E+01
  7.2000E+02   0.0000E+00
Output Filename:
C:\Polestar\CGS QA\Radtrad Check\Columbia _4u.o0
  1
  1
  1
  1
  1
End of Scenario File
```

Columbia_5f.psf

```
Radtrad 3.02 1/5/2000
 Columbia AST - ESF - Filtered
 Nuclide Inventory File:
 C:\Polestar\CGS QA\Radtrad Check\columbiaesf.NIF
 Plant Power Level:
  3.5560E+03
 Compartments:
   7
 Compartment 1:
 DW
   3
  2.0050E+05
   1
   0
   0
   0
   0
 Compartment 2:
 WW
   3
  1.4420E+05
   0
   0
   0
   0
   0
 Compartment 3:
 RB
   3
  1.3920E+06
   0
   0
   0
   0
   0
 Compartment 4:
 SP
   3
  1.3730E+05
   0
   0
   0
   0
   0
 Compartment 5:
 CR
   1
  2.1400E+05
   0
   0
   0
   0
   0
 Compartment 6:
 Enviro
   2
  0.0000E+00
   0
   0
   0
   0
   0
 Compartment 7:
 Dummy
   3
  1.0000E+06
   0
   0
   0
   0
   0
 Pathways:
  12
 Pathway 1:
 DW to WW
   1
   2
   2
 Pathway 2:
 WW to DW
   2
```

```
  1
  2
Pathway 3:
Failed SL to Dummy
  1
  7
  2
Pathway 4:
Intact SLs to Dummy
  1
  7
  2
Pathway 5:
DW to RB
  1
  3
  2
Pathway 6:
WW to RB
  2
  3
  2
Pathway 7:
Bypass DW to Dummy
  1
  7
  2
Pathway 8:
Bypass WW to Dummy
  2
  7
  2
Pathway 9:
SP to RB
  4
  3
  2
Pathway 10:
RB SGTS to Enviro
  3
  6
  2
Pathway 11:
Enviro to CR (filtered)
  6
  5
  2
Pathway 12:
CR to Enviro
  5
  6
  2
End of Plant Model File
Scenario Description Name:

Plant Model Filename:

Source Term:
  2
  1   0.0000E+00
  4   1.0000E+00
c:\radtrad3.02a\defaults\fgr11&12.inp
c:\polestar\cgs qa\radtrad check\columbia.rft
  0.0000E+00
  1
  9.5000E-01   4.8500E-02   1.5000E-03
1.0000E+00
Overlying Pool:
  0
  0.0000E+00
  0
  0
  0
  0
Compartments:
  7
Compartment 1:
  0
  1
  1
  0.0000E+00
  5
  0.0000E+00   0.0000E+00
  2.5000E-01   6.2000E+00
```

```
  2.4400E+00   6.2000E-01
  2.4000E+01   0.0000E+00
  7.2000E+02   0.0000E+00
  1
  0.0000E+00
  5
  0.0000E+00   0.0000E+00
  2.5000E-01   6.2000E+00
  2.4400E+00   6.2000E-01
  2.4000E+01   0.0000E+00
  7.2000E+02   0.0000E+00
  1
  0.0000E+00
  0
  0
  0
  0
  0
Compartment 2:
  0
  1
  0
  0
  0
  0
  0
  0
  0
  0
  0
Compartment 3:
  0
  1
  0
  0
  0
  0
  0
  0
  0
Compartment 4:
  0
  1
  0
  0
  0
  0
  0
  0
Compartment 5:
  0
  1
  0
  0
  0
  0
  0
  0
  0
Compartment 6:
  0
  1
  0
  0
  0
  0
  0
  0
  0
  0
Compartment 7:
  0
  1
  0
  0
  0
  0
  0
  0
  0
Pathways:
 12
Pathway 1:
  0
  0
  0
```

```
   0
   0
   1
   3
   0.0000E+00   0.0000E+00   0.0000E+00
0.0000E+00   0.0000E+00
   2.0333E+00   1.4420E+05   0.0000E+00
0.0000E+00   0.0000E+00
   7.2000E+02   1.4420E+05   0.0000E+00
0.0000E+00   0.0000E+00
   0
   0
   0
   0
   0
   0
 Pathway 2:
   0
   0
   0
   0
   0
   1
   3
   0.0000E+00   0.0000E+00   0.0000E+00
0.0000E+00   0.0000E+00
   2.0333E+00   1.4420E+05   0.0000E+00
0.0000E+00   0.0000E+00
   7.2000E+02   1.4420E+05   0.0000E+00
0.0000E+00   0.0000E+00
   0
   0
   0
   0
   0
   0
   0
 Pathway 3:
   0
   0
   0
   0
   0
   1
   3
   0.0000E+00   9.9500E-02   0.0000E+00
0.0000E+00   0.0000E+00
   2.4000E+01   4.9800E-02   0.0000E+00
0.0000E+00   0.0000E+00
   7.2000E+02   4.9800E-02   0.0000E+00
0.0000E+00   0.0000E+00
   0
   0
   0
   0
   0
   0
 Pathway 4:
   0
   0
   0
   0
   0
   1
   3
   0.0000E+00   2.9900E-01   8.0400E+01
6.4800E+01   1.0000E-01
   2.4000E+01   1.4900E-01   8.0400E+01
6.4800E+01   1.0000E-01
   7.2000E+02   1.4900E-01   8.0400E+01
6.4800E+01   1.0000E-01
   0
   0
   0
   0
   0
   0
   0
 Pathway 5:
   0
   0
   0
   0
   0
   1
   4
```

```
   0.0000E+00   0.0000E+00   0.0000E+00
0.0000E+00   0.0000E+00
   1.6700E-01   6.9600E-01   0.0000E+00
0.0000E+00   0.0000E+00
   2.4000E+01   3.4800E-01   0.0000E+00
0.0000E+00   0.0000E+00
   7.2000E+02   3.4800E-01   0.0000E+00
0.0000E+00   0.0000E+00
   0
   0
   0
   0
   0
   0
 Pathway 6:
   0
   0
   0
   0
   0
   1
   4
   0.0000E+00   0.0000E+00   0.0000E+00
0.0000E+00   0.0000E+00
   1.6700E-01   5.0000E-01   0.0000E+00
0.0000E+00   0.0000E+00
   2.4000E+01   2.5000E-01   0.0000E+00
0.0000E+00   0.0000E+00
   7.2000E+02   2.5000E-01   0.0000E+00
0.0000E+00   0.0000E+00
   0
   0
   0
   0
   0
   0
   0
 Pathway 7:
   0
   0
   0
   0
   0
   1
   4
   0.0000E+00   7.5200E-01   0.0000E+00
0.0000E+00   0.0000E+00
   1.6700E-01   5.6000E-02   0.0000E+00
0.0000E+00   0.0000E+00
   2.4000E+01   2.8000E-02   0.0000E+00
0.0000E+00   0.0000E+00
   7.2000E+02   2.8000E-02   0.0000E+00
0.0000E+00   0.0000E+00
   0
   0
   0
   0
   0
   0
 Pathway 8:
   0
   0
   0
   0
   0
   1
   4
   0.0000E+00   5.4100E-01   0.0000E+00
0.0000E+00   0.0000E+00
   1.6700E-01   4.0000E-02   0.0000E+00
0.0000E+00   0.0000E+00
   2.4000E+01   2.0000E-02   0.0000E+00
0.0000E+00   0.0000E+00
   7.2000E+02   2.0000E-02   0.0000E+00
0.0000E+00   0.0000E+00
   7.2000E+02   2.0000E-02   0.0000E+00
0.0000E+00   0.0000E+00
   0
   0
   0
   0
   0
   0
 Pathway 9:
   0
   0
   0
```

```
   0
   0
   1
   3
   0.0000E+00   0.0000E+00   0.0000E+00
0.0000E+00   0.0000E+00
   2.5000E-01   2.6800E-01   1.0000E+02
0.0000E+00   0.0000E+00
   7.2000E+02   2.6800E-01   1.0000E+02
0.0000E+00   0.0000E+00
   0
   0
   0
   0
   0
   0
 Pathway 10:
   0
   0
   0
   0
   0
   1
   3
   0.0000E+00   5.0000E+03   0.0000E+00
0.0000E+00   0.0000E+00
   1.6700E-01   5.0000E+03   9.8000E+01
9.8000E+01   9.8000E+01
   7.2000E+02   5.0000E+03   9.8000E+01
9.8000E+01   9.8000E+01
   0
   0
   0
   0
   0
   0
 Pathway 11:
   0
   0
   0
   0
   0
   1
   3
   0.0000E+00   1.8000E+03   9.9000E+01
9.5000E+01   9.5000E+01
   5.0000E-01   9.0000E+02   9.9000E+01
9.5000E+01   9.5000E+01
   7.2000E+02   9.0000E+02   9.9000E+01
9.5000E+01   9.5000E+01
   0
   0
   0
   0
   0
   0
 Pathway 12:
   0
   0
   0
   0
   0
   1
   3
   0.0000E+00   2.0500E+03   1.0000E+02
1.0000E+02   1.0000E+02
   5.0000E-01   1.0250E+03   1.0000E+02
1.0000E+02   1.0000E+02
   7.2000E+02   1.0250E+03   1.0000E+02
1.0000E+02   1.0000E+02
   0
   0
   0
   0
   0
   0
 Dose Locations:
   3
 Location 1:
 CR
   5
   0
   1
   2
```

```
  0.0000E+00   3.5000E-04
  7.2000E+02   3.5000E-04
  1
  4
  0.0000E+00   1.0000E+00
  2.4000E+01   6.0000E-01
  9.6000E+01   4.0000E-01
  7.2000E+02   4.0000E-01
Location 2:
EAB
  6
  1
  2
  0.0000E+00   1.7000E-04
  7.2000E+02   1.7000E-04
  1
  4
  0.0000E+00   3.5000E-04
  8.0000E+00   1.8000E-04
  2.4000E+01   2.3000E-04
  7.2000E+02   2.3000E-04
  0
Location 3:
LPZ
  6
  1
  5
  0.0000E+00   5.6000E-05
  8.0000E+00   1.3000E-05
  2.4000E+01   4.2000E-06
  9.6000E+01   9.0000E-07
  7.2000E+02   9.0000E-07
  1
  4
  0.0000E+00   3.5000E-04
  8.0000E+00   1.8000E-04
  2.4000E+01   2.3000E-04
  7.2000E+02   2.3000E-04
  0
Effective Volume Location:
  1
  7
  0.0000E+00   2.4100E-04
  5.0000E-01   2.2900E-04
  2.0000E+00   9.4700E-05
  8.0000E+00   5.1700E-05
  2.4000E+01   3.9700E-05
  9.6000E+01   3.0500E-05
  7.2000E+02   3.0500E-05
Simulation Parameters:
  6
  0.0000E+00   5.0000E-03
  4.0000E+00   5.0000E-01
  8.0000E+00   1.0000E+00
  2.4000E+01   2.0000E+00
  4.8000E+01   2.4000E+01
  7.2000E+02   0.0000E+00
Output Filename:
C:\Polestar\CGS QA\Radtrad Check\Columbia _5f.o0
  1
  1
  1
  1
  1
End of Scenario File
```

Columbia_5u.psf

```
Radtrad 3.02 1/5/2000
 Columbia AST - ESF Release - Unfiltered
 Nuclide Inventory File:
 C:\POLESTAR\CGS QA\Radtrad Check\columbiaesf.NIF
 Plant Power Level:
  3.5560E+03
 Compartments:
   7
 Compartment 1:
 DW
   3
  2.0050E+05
   1
   0
   0
   0
   0
 Compartment 2:
 WW
   3
  1.4420E+05
   0
   0
   0
   0
   0
   0
   0
 Compartment 3:
 RB
   3
  1.3920E+06
   0
   0
   0
   0
   0
 Compartment 4:
 SP
   3
  1.3730E+05
   0
   0
   0
   0
   0
 Compartment 5:
 CR
   1
  2.1400E+05
   0
   0
   0
   0
   0
 Compartment 6:
 Enviro
   2
  0.0000E+00
   0
   0
   0
   0
   0
 Compartment 7:
 Dummy
   3
  1.0000E+06
   0
   0
   0
   0
   0
 Pathways:
  12
 Pathway 1:
 DW to WW
   1
   2
   2
 Pathway 2:
 WW to DW
   2
```

```
  1
  2
Pathway 3:
Failed SL to Dummy
  1
  7
  2
Pathway 4:
Intact SLs to Dummy
  1
  7
  2
Pathway 5:
DW to RB
  1
  3
  2
Pathway 6:
WW to RB
  2
  3
  2
Pathway 7:
Bypass DW to Dummy
  1
  7
  2
Pathway 8:
Bypass WW to Dummy
  2
  7
  2
Pathway 9:
SP to RB
  4
  3
  2
Pathway 10:
RB SGTS to Enviro
  3
  6
  2
Pathway 11:
Enviro to CR (unfiltered)
  6
  5
  2
Pathway 12:
CR to Enviro
  5
  6
  2
End of Plant Model File
Scenario Description Name:

Plant Model Filename:

Source Term:
  2
  1   0.0000E+00
  4   1.0000E+00
c:\polestar\computer\radtrad
3.02a\defaults\fgr11&12.inp
C:\POLESTAR\CGS QA\Radtrad Check\columbia.RFT
  0.0000E+00
  1
  9.5000E-01   4.8500E-02   1.5000E-03
1.0000E+00
Overlying Pool:
  0
  0.0000E+00
  0
  0.0000E+00
  0
  0
  0
  0
Compartments:
  7
Compartment 1:
  0
  1
  1
  0.0000E+00
  5
  0.0000E+00   0.0000E+00
```

```
  2.5000E-01   6.2000E+00
  2.4400E+00   6.2000E-01
  2.4000E+01   0.0000E+00
  7.2000E+02   0.0000E+00
  1
  0.0000E+00
  5
  0.0000E+00   0.0000E+00
  2.5000E-01   6.2000E+00
  2.4400E+00   6.2000E-01
  2.4000E+01   0.0000E+00
  7.2000E+02   0.0000E+00
  1
  0.0000E+00
  0
  0
  0
  0
  0
Compartment 2:
  0
  1
  0
  0
  0
  0
  0
  0
  0
Compartment 3:
  0
  1
  0
  0
  0
  0
  0
  0
  0
Compartment 4:
  0
  1
  0
  0
  0
  0
  0
  0
Compartment 5:
  0
  1
  0
  0
  0
  0
  0
  0
  0
Compartment 6:
  0
  1
  0
  0
  0
  0
  0
  0
  0
Compartment 7:
  0
  1
  0
  0
  0
  0
  0
  0
  0
Pathways:
 12
Pathway 1:
  0
  0
```

```
   0
   0
   0
   1
   3
   0.0000E+00   0.0000E+00   0.0000E+00
0.0000E+00   0.0000E+00
   2.0333E+00   1.4420E+05   0.0000E+00
0.0000E+00   0.0000E+00
   7.2000E+02   1.4420E+05   0.0000E+00
0.0000E+00   0.0000E+00
   0
   0
   0
   0
   0
   0
 Pathway 2:
   0
   0
   0
   0
   0
   1
   3
   0.0000E+00   0.0000E+00   0.0000E+00
0.0000E+00   0.0000E+00
   2.0333E+00   1.4420E+05   0.0000E+00
0.0000E+00   0.0000E+00
   7.2000E+02   1.4420E+05   0.0000E+00
0.0000E+00   0.0000E+00
   0
   0
   0
   0
   0
   0
 Pathway 3:
   0
   0
   0
   0
   0
   1
   3
   0.0000E+00   9.9500E-02   0.0000E+00
0.0000E+00   0.0000E+00
   2.4000E+01   4.9800E-02   0.0000E+00
0.0000E+00   0.0000E+00
   7.2000E+02   4.9800E-02   0.0000E+00
0.0000E+00   0.0000E+00
   0
   0
   0
   0
   0
   0
 Pathway 4:
   0
   0
   0
   0
   0
   1
   3
   0.0000E+00   2.9900E-01   8.0400E+01
6.4700E+01   1.0000E-01
   2.4000E+01   1.4900E-01   8.0400E+01
6.4700E+01   1.0000E-01
   7.2000E+02   1.4900E-01   8.0400E+01
6.4700E+01   1.0000E-01
   0
   0
   0
   0
   0
   0
 Pathway 5:
   0
   0
   0
   0
   0
   1
```

```
   4
   0.0000E+00   0.0000E+00   0.0000E+00
0.0000E+00   0.0000E+00
   1.6700E-01   4.4560E-01   0.0000E+00
0.0000E+00   0.0000E+00
   2.4000E+01   2.2280E-01   0.0000E+00
0.0000E+00   0.0000E+00
   7.2000E+02   2.2280E-01   0.0000E+00
0.0000E+00   0.0000E+00
   0
   0
   0
   0
   0
   0
 Pathway 6:
   0
   0
   0
   0
   0
   1
   4
   0.0000E+00   0.0000E+00   0.0000E+00
0.0000E+00   0.0000E+00
   1.6700E-01   3.2040E-01   0.0000E+00
0.0000E+00   0.0000E+00
   2.4000E+01   1.6020E-01   0.0000E+00
0.0000E+00   0.0000E+00
   7.2000E+02   1.6020E-01   0.0000E+00
0.0000E+00   0.0000E+00
   0
   0
   0
   0
   0
   0
 Pathway 7:
   0
   0
   0
   0
   0
   1
   4
   0.0000E+00   4.5040E-01   0.0000E+00
0.0000E+00   0.0000E+00
   1.6700E-01   4.8000E-03   0.0000E+00
0.0000E+00   0.0000E+00
   2.4000E+01   2.4000E-03   0.0000E+00
0.0000E+00   0.0000E+00
   7.2000E+02   2.4000E-03   0.0000E+00
0.0000E+00   0.0000E+00
   0
   0
   0
   0
   0
   0
 Pathway 8:
   0
   0
   0
   0
   0
   1
   3
   0.0000E+00   3.2040E-01   0.0000E+00
0.0000E+00   0.0000E+00
   1.6700E-01   0.0000E+00   0.0000E+00
0.0000E+00   0.0000E+00
   7.2000E+02   0.0000E+00   0.0000E+00
0.0000E+00   0.0000E+00
   0
   0
   0
   0
   0
   0
 Pathway 9:
   0
   0
   0
   0
```

```
   0
   1
   3
   0.0000E+00   0.0000E+00   0.0000E+00
0.0000E+00   0.0000E+00
   2.5000E-01   2.6800E-01   1.0000E+02
0.0000E+00   0.0000E+00
   7.2000E+02   2.6800E-01   1.0000E+02
0.0000E+00   0.0000E+00
   0
   0
   0
   0
   0
   0
 Pathway 10:
   0
   0
   0
   0
   0
   1
   3
   0.0000E+00   4.4570E+03   0.0000E+00
0.0000E+00   0.0000E+00
   1.6700E-01   2.5000E+03   9.7600E+01
9.7600E+01   9.7600E+01
   7.2000E+02   2.5000E+03   9.7600E+01
9.7600E+01   9.7600E+01
   0
   0
   0
   0
   0
   0
 Pathway 11:
   0
   0
   0
   0
   0
   1
   3
   0.0000E+00   2.5000E+02   0.0000E+00
0.0000E+00   0.0000E+00
   1.6700E-01   1.2500E+02   0.0000E+00
0.0000E+00   0.0000E+00
   7.2000E+02   1.2500E+02   0.0000E+00
0.0000E+00   0.0000E+00
   0
   0
   0
   0
   0
   0
 Pathway 12:
   0
   0
   0
   0
   0
   1
   3
   0.0000E+00   2.0500E+03   1.0000E+02
1.0000E+02   1.0000E+02
   1.6700E-01   1.0250E+03   1.0000E+02
1.0000E+02   1.0000E+02
   7.2000E+02   1.0250E+03   1.0000E+02
1.0000E+02   1.0000E+02
   0
   0
   0
   0
   0
   0
   0
 Dose Locations:
   3
 Location 1:
 CR
   5
   0
   1
   2
   0.0000E+00   3.5000E-04
```

```
  7.2000E+02   3.5000E-04
  1
  4
  0.0000E+00   1.0000E+00
  2.4000E+01   6.0000E-01
  9.6000E+01   4.0000E-01
  7.2000E+02   4.0000E-01
Location 2:
EAB
  6
  1
  2
  0.0000E+00   1.7000E-04
  7.2000E+02   1.7000E-04
  1
  4
  0.0000E+00   3.5000E-04
  8.0000E+00   1.8000E-04
  2.4000E+01   2.3000E-04
  7.2000E+02   2.3000E-04
  0
Location 3:
LPZ
  6
  1
  5
  0.0000E+00   5.6000E-05
  8.0000E+00   1.3000E-05
  2.4000E+01   4.2000E-06
  9.6000E+01   9.0000E-07
  7.2000E+02   9.0000E-07
  1
  4
  0.0000E+00   3.5000E-04
  8.0000E+00   1.8000E-04
  2.4000E+01   2.3000E-04
  7.2000E+02   2.3000E-04
  0
Effective Volume Location:
  1
  6
  0.0000E+00   5.1300E-04
  2.0000E+00   3.0500E-04
  8.0000E+00   1.7700E-04
  2.4000E+01   1.1900E-04
  9.6000E+01   8.8500E-05
  7.2000E+02   8.8500E-05
Simulation Parameters:
  6
  0.0000E+00   5.0000E-03
  4.0000E+00   5.0000E-01
  8.0000E+00   1.0000E+00
  2.4000E+01   2.0000E+00
  4.8000E+01   2.4000E+01
  7.2000E+02   0.0000E+00
Output Filename:
C:\POLESTAR\CGS QA\Radtrad Check\Columbia
AST_5u.o0
  1
  1
  1
  1
  1
End of Scenario File
```