CERTIFICATE OF COMPLIANCE NO. 1014

APPENDIX B

APPROVED CONTENTS AND DESIGN FEATURES

FOR THE HI-STORM 100 CASK SYSTEM

TABLE OF CONTENTS

1.0 DEFINITIONS 1-1

2.0 APPROVED CONTENTS 2-1

3.0 DESIGN FEATURES 3-1
3.1 Site 3-1
3.2 Design Features Important for Criticality Control 3-1
3.3 Codes and Standards 3-2
3.4 Site Specific Parameters and Analyses 3-8
3.5 Cask Transfer Facility (CTF) 3-12
3.6 Forced Helium Dehydration System 3-15

Table 3-1 List of ASME Code Exceptions for HI-STORM 100 System 3-3
Table 3-2 Representative DBE Acceleration Values to Prevent HI-STORM 100 Sliding (μ = 0.53) 3-8
Table 3-3 Load Combinations and Service Condition Definitions For the CTF Structure 3-14

1.0 Definitions

----------NOTE----------
The defined terms of this section appear in capitalized type and are applicable throughout these Technical Specifications and Bases.

Term	Definition
CASK TRANSFER FACILITY (CTF)	The CASK TRANSFER FACILITY includes the following components and equipment: (1) a Cask Transfer Structure used to stabilize the TRANSFER CASK and MPC during lifts involving spent fuel not bounded by the regulations of 10 CFR Part 50, and (2) Either a stationary lifting device or a mobile lifting device used in concert with the stationary structure to lift the OVERPACK, TRANSFER CASK, and MPC
DAMAGED FUEL ASSEMBLY	DAMAGED FUEL ASSEMBLIES are fuel assemblies with known or suspected cladding defects, as determined by a review of records, greater than pinhole leaks or hairline cracks, empty fuel rod locations that are not filled with dummy fuel rods, or those that cannot be handled by normal means. Fuel assemblies that cannot be handled by normal means due to fuel cladding damage are considered FUEL DEBRIS.
DAMAGED FUEL CONTAINER (DFC)	DFCs are specially designed enclosures for DAMAGED FUEL ASSEMBLIES or FUEL DEBRIS which permit gaseous and liquid media to escape while minimizing dispersal of gross particulates. DFCs authorized for use in the HI-STORM 100 System are as follows: 1. Holtec Dresden Unit 1/Humboldt Bay design 2. Transnuclear Dresden Unit 1 design 3. Holtec Generic BWR design 4. Holtec Generic PWR design
FUEL DEBRIS	FUEL DEBRIS is ruptured fuel rods, severed rods, loose fuel pellets or fuel assemblies with known or suspected defects which cannot be handled by normal means due to fuel cladding damage.

(continued)

1.0 Definitions (continued)

INTACT FUEL ASSEMBLY	INTACT FUEL ASSEMBLIES are fuel assemblies without known or suspected cladding defects greater than pinhole leaks or hairline cracks and which can be handled by normal means. Fuel assemblies without fuel rods in fuel rod locations shall not be classified as INTACT FUEL ASSEMBLIES unless dummy fuel rods are used to displace an amount of water greater than or equal to that displaced by the fuel rod(s).
LOADING OPERATIONS	LOADING OPERATIONS include all licensed activities on an OVERPACK or TRANSFER CASK while it is being loaded with fuel assemblies. LOADING OPERATIONS begin when the first fuel assembly is placed in the MPC and end when the OVERPACK or TRANSFER CASK is suspended from or secured on the transporter. LOADING OPERATIONS does not included MPC transfer between the TRANSFER CASK and the OVERPACK.
MULTI-PURPOSE CANISTER (MPC)	MPCs are the sealed spent nuclear fuel canisters which consist of a honeycombed fuel basket contained in a cylindrical canister shell which is welded to a baseplate, lid with welded port cover plates, and closure ring. The MPC provides the confinement boundary for the contained radioactive materials.
NON-FUEL HARDWARE	NON-FUEL HARDWARE is defined as Burnable Poison Rod Assemblies (BPRAs), Thimble Plug Devices (TPDs), Control Rod Assemblies (CRAs), Axial Power Shaping Rods (APSRs), Wet Annular Burnable Absorbers (WABAs), Rod Cluster Control Assemblies (RCCAs), Control Element Assemblies (CEAs), water displacement guide tube plugs, and orifice rod assemblies.

(continued)

1.0 Definitions (continued)

OVERPACK	OVERPACKs are the casks which receive and contain the sealed MPCs for interim storage on the ISFSI. They provide gamma and neutron shielding, and provide for ventilated air flow to promote heat transfer from the MPC to the environs. The OVERPACK does not include the TRANSFER CASK.
PLANAR-AVERAGE INITIAL ENRICHMENT	PLANAR-AVERAGE INITIAL ENRICHMENT is the average of the distributed fuel rod initial enrichments within a given axial plane of the assembly lattice.
SPENT FUEL STORAGE CASKS (SFSCs)	An SFSC is a container approved for the storage of spent fuel assemblies at the ISFSI. The HI-STORM 100 SFSC System consists of the OVERPACK and its integral MPC.
TRANSFER CASK	TRANSFER CASKs are containers designed to contain the MPC during and after loading of spent fuel assemblies and to transfer the MPC to or from the OVERPACK. The HI-STORM 100 System employs either the 125-Ton or the 100-Ton HI-TRAC TRANSFER CASK.
TRANSPORT OPERATIONS	TRANSPORT OPERATIONS include all licensed activities performed on an OVERPACK or TRANSFER CASK loaded with one or more fuel assemblies when it is being moved to and from the ISFSI. TRANSPORT OPERATIONS begin when the OVERPACK or TRANSFER CASK is first suspended from or secured on the transporter and end when the OVERPACK or TRANSFER CASK is at its destination and no longer secured on or suspended from the transporter. TRANSPORT OPERATIONS include transfer of the MPC between the OVERPACK and the TRANSFER CASK.

(continued)

1.0 Definitions (continued)

UNLOADING OPERATIONS	UNLOADING OPERATIONS include all licensed activities on an SFSC to be unloaded of the contained fuel assemblies. UNLOADING OPERATIONS begin when the OVERPACK or TRANSFER CASK is no longer suspended from or secured on the transporter and end when the last fuel assembly is removed from the SFSC. UNLOADING OPERATIONS does not include MPC transfer between the TRANSFER CASK and the OVERPACK.

2.0 APPROVED CONTENTS

2.1 Fuel Specifications and Loading Conditions

2.1.1 Fuel To Be Stored In The HI-STORM 100 SFSC System

a. INTACT FUEL ASSEMBLIES, DAMAGED FUEL ASSEMBLIES, FUEL DEBRIS, and NON-FUEL HARDWARE meeting the limits specified in Table 2.1-1 and other referenced tables may be stored in the HI-STORM 100 SFSC System.

b. For MPCs partially loaded with stainless steel clad fuel assemblies, all remaining fuel assemblies in the MPC shall meet the decay heat generation limit for the stainless steel clad fuel assemblies.

c. For MPCs partially loaded with DAMAGED FUEL ASSEMBLIES or FUEL DEBRIS, all remaining Zircaloy (or other alloy of zirconium) clad INTACT FUEL ASSEMBLIES in the MPC shall meet the decay heat generation limits for the DAMAGED FUEL ASSEMBLIES. This requirement applies only to uniform fuel loading.

d. For MPCs partially loaded with array/class 6x6A, 6x6B, 6x6C, 7x7A, or 8x8A fuel assemblies, all remaining Zircaloy (or other alloy of zirconium) clad INTACT FUEL ASSEMBLIES in the MPC shall meet the decay heat generation limits for the 6x6A, 6x6B, 6x6C, *7x7A* and 8x8A fuel assemblies.

e. All BWR fuel assemblies may be stored with or without Zircaloy (or other alloy of zirconium) channels with the exception of array/class 10x10D and 10x10E fuel assemblies, which may be stored with or without Zircaloy or stainless steel channels.

(continued)

2.0 Approved Contents

2.1 Fuel Specifications and Loading Conditions (cont'd)

2.1.2 Uniform Fuel Loading

Preferential fuel loading shall be used during uniform loading (i.e., any authorized fuel assembly in any fuel storage location) whenever fuel assemblies with significantly different post-irradiation cooling times (≥ 1 year) are to be loaded in the same MPC. Fuel assemblies with the longest post-irradiation cooling times shall be loaded into fuel storage locations at the periphery of the basket. Fuel assemblies with shorter post-irradiation cooling times shall be placed toward the center of the basket. Regionalized fuel loading as described in Technical Specification 2.1.3 below meets the intent of preferential fuel loading.

2.1.3 Regionalized Fuel Loading

Users may choose to store fuel using regionalized loading in lieu of uniform loading to allow higher heat emitting fuel assemblies to be stored than would otherwise be able to be stored using uniform loading. Regionalized loading is limited to those fuel assemblies with Zircaloy (or other alloy of zirconium) cladding. Figures 2.1-1 through 2.1-4 define the regions for the MPC-24, MPC-24E, MPC-24EF, MPC-32, MPC-68, and MPC-68FF models, respectively[1]. Fuel assembly burnup, decay heat, and cooling time limits for regionalized loading are specified in Tables 2.1-6 and 2.1-7. Fuel assemblies used in regionalized loading shall meet all other applicable limits specified in Tables 2.1-1 through 2.1-3.

2.2 Violations

If any Fuel Specifications or Loading Conditions of 2.1 are violated, the following actions shall be completed:

2.2.1 The affected fuel assemblies shall be placed in a safe condition.

2.2.2 Within 24 hours, notify the NRC Operations Center.

2.2.3 Within 30 days, submit a special report which describes the cause of the violation, and actions taken to restore compliance and prevent recurrence.

[1] These figures are only intended to distinguish the fuel loading regions. Other details of the basket design are illustrative and may not reflect the actual basket design details. The design drawings should be consulted for basket design details.

LEGEND:

REGION 1:

REGION 2:

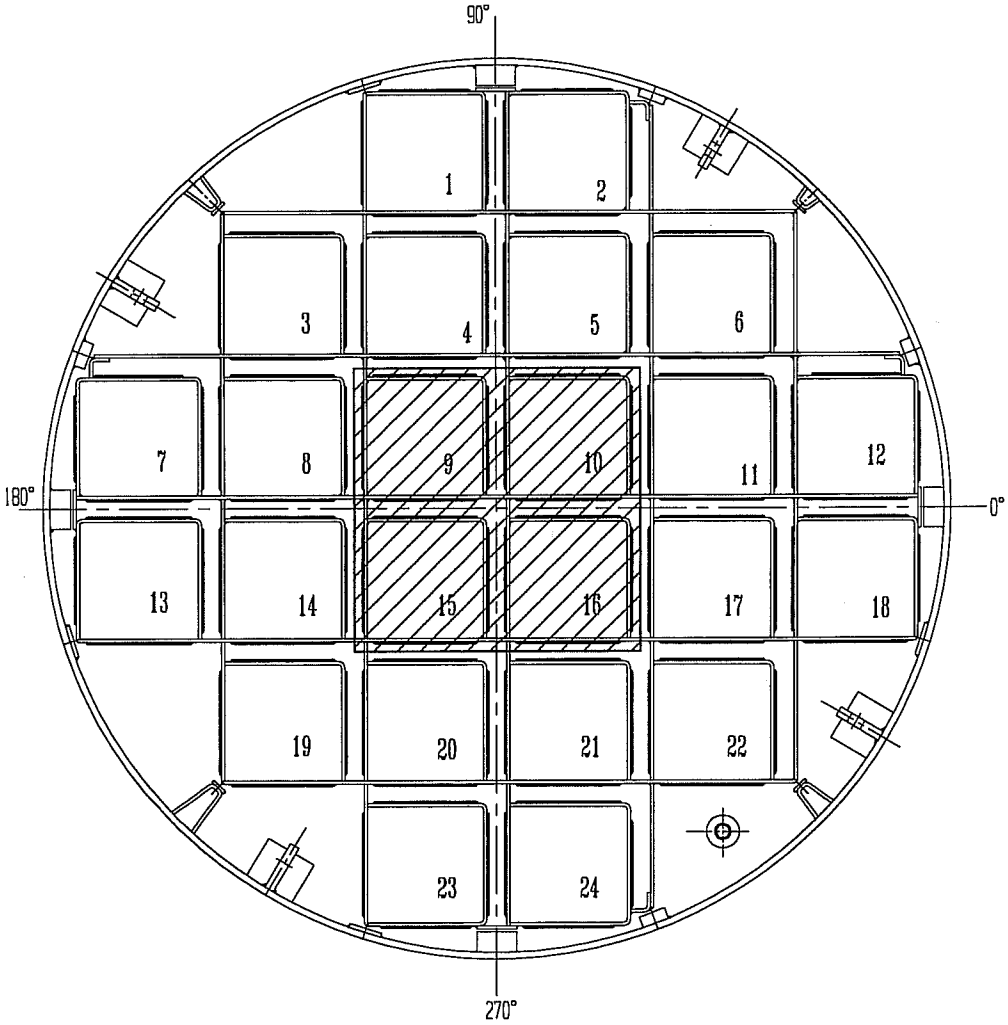

FIGURE 2.1-1
FUEL LOADING REGIONS - MPC-24

LEGEND:

REGION 1:

REGION 2:

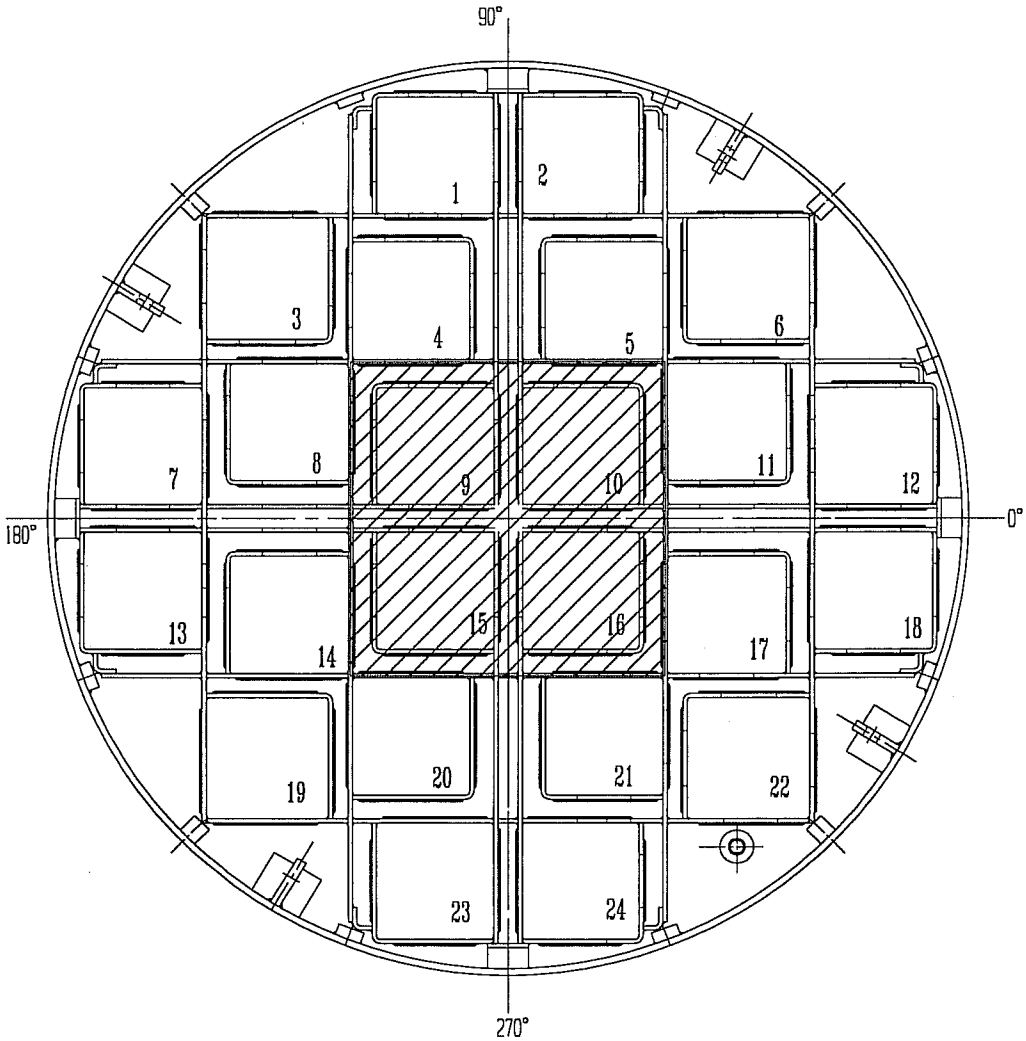

FIGURE 2.1-2

FUEL LOADING REGIONS - MPC-24E/24EF

LEGEND:

REGION 1:

REGION 2:

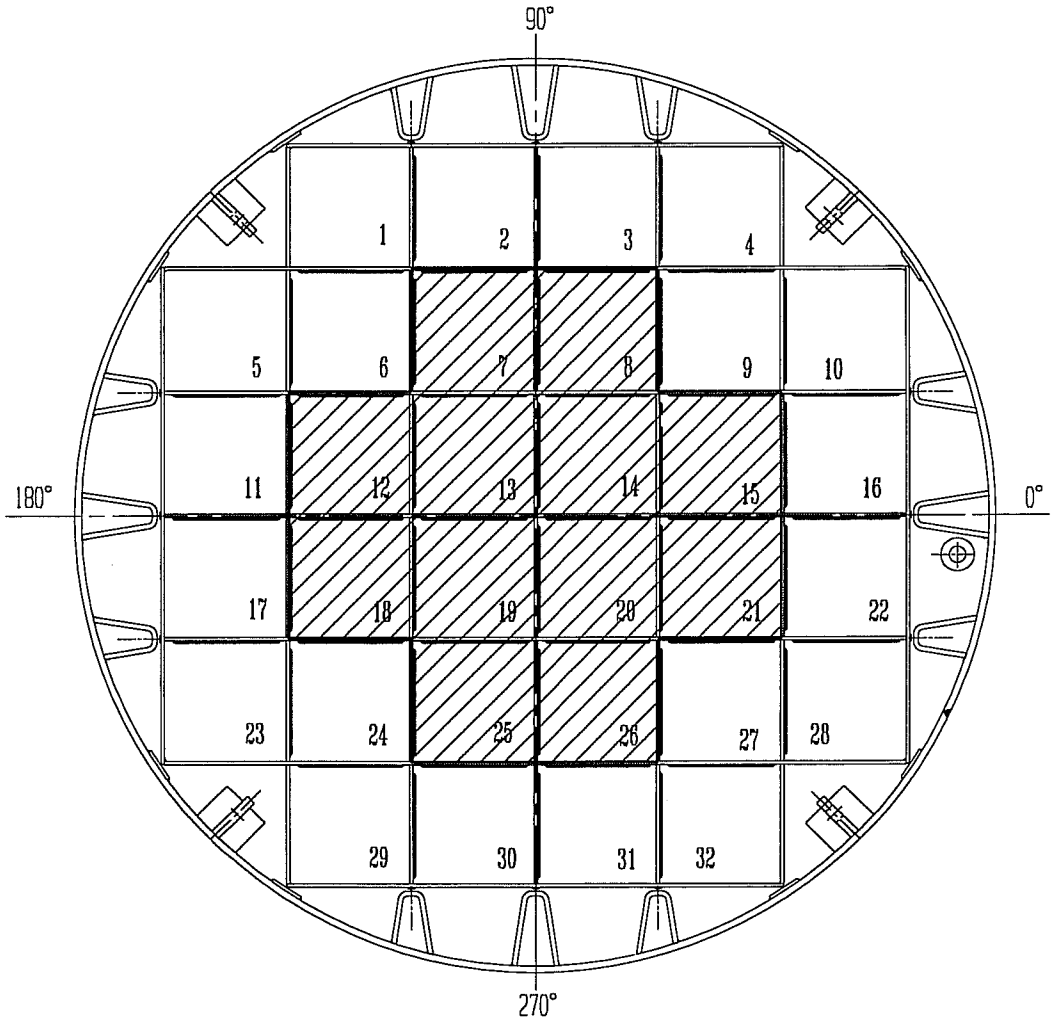

FIGURE 2.1-3

FUEL LOADING REGIONS - MPC-32

LEGEND:

REGION 1:

REGION 2:

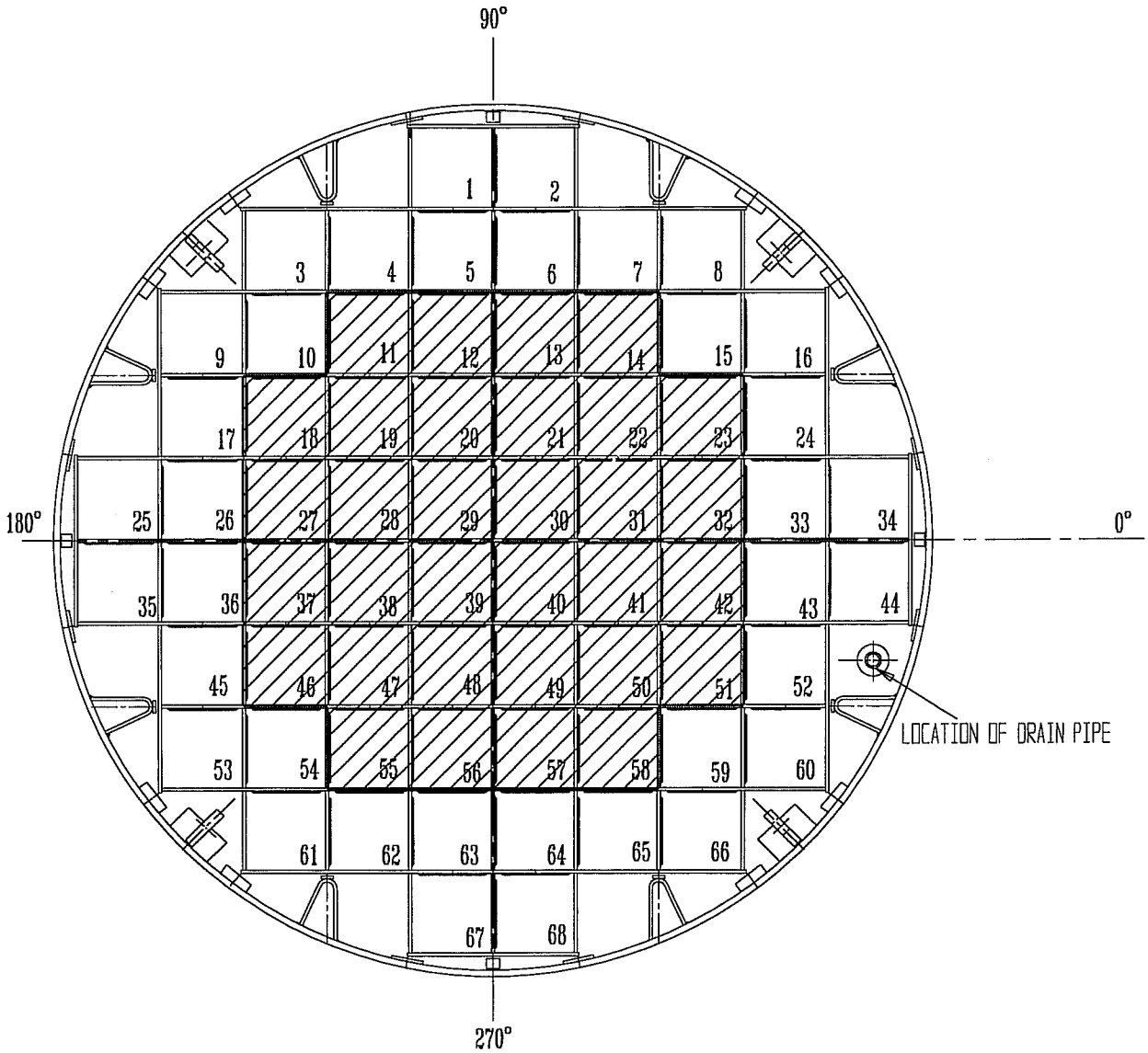

FIGURE 2.1-4

FUEL LOADING REGIONS - MPC-68/68FF

Table 2.1-1 (page 1 of 33)
Fuel Assembly Limits

I. MPC MODEL: MPC-24

A. Allowable Contents

1. Uranium oxide, PWR INTACT FUEL ASSEMBLIES listed in Table 2.1-2, with or without NON-FUEL HARDWARE and meeting the following specifications (Note 1):

a. Cladding Type:	Zircaloy (Zr) or Stainless Steel (SS) as specified in Table 2.1-2 for the applicable fuel assembly array/class.
b. Initial Enrichment:	As specified in Table 2.1-2 for the applicable fuel assembly array/class.
c. Post-irradiation Cooling Time and Average Burnup Per Assembly:	
i. Array/Classes 14x14D,14x14E, and 15x15G	Cooling time $\geq$ 8 years and an average burnup $\leq$ 40,000 MWD/MTU.
ii. All Other Array/Classes	Cooling time and average burnup as specified in Tables 2.1-4 or 2.1-6.
iii. NON-FUEL HARDWARE	As specified in Table 2.1-8.

Table 2.1-1 (page 2 of 33)
Fuel Assembly Limits

I. MPC MODEL: MPC-24 (continued)

A. Allowable Contents (continued)

d. Decay Heat Per Assembly:

i. Array/Classes 14x14D, 14x14E, and 15x15G	≤ 710 Watts
ii All Other Array/Classes	As specified in Tables 2.1-5 or 2.1-7
e. Fuel Assembly Length:	≤ 176.8 inches (nominal design)
f. Fuel Assembly Width:	≤ 8.54 inches (nominal design)
g. Fuel Assembly Weight:	≤ 1,680 lbs (including NON-FUEL HARDWARE)

B. Quantity per MPC: Up to 24 fuel assemblies.

C. Deleted.

D. DAMAGED FUEL ASSEMBLIES and FUEL DEBRIS are not authorized for loading into the MPC-24.

Note 1: Fuel assemblies containing BPRAs, TPDs, WABAs, water displacement guide tube plugs, or orifice rod assemblies may be stored in any fuel cell location. Fuel assemblies containing CRAs, RCCAs, CEAs, or APSRs may only be loaded in fuel storage locations 9, 10, 15, and/or 16. These requirements are in addition to any other requirements specified for uniform or regionalized fuel loading.

Table 2.1-1 (page 3 of 33)
Fuel Assembly Limits

II. MPC MODEL: MPC-68

A. Allowable Contents

1. Uranium oxide, BWR INTACT FUEL ASSEMBLIES listed in Table 2.1-3, with or without channels, and meeting the following specifications:

a. Cladding Type:	Zircaloy (Zr) or Stainless Steel (SS) as specified in Table 2.1-3 for the applicable fuel assembly array/class.
b. Maximum PLANAR-AVERAGE INITIAL ENRICHMENT:	As specified in Table 2.1-3 for the applicable fuel assembly array/class.
c. Initial Maximum Rod Enrichment:	As specified in Table 2.1-3 for the applicable fuel assembly array/class.
d. Post-irradiation Cooling Time and Average Burnup Per Assembly:	
i. Array/Classes 6x6A, 6x6C, 7x7A, and 8x8A:	Cooling time $\geq$ 18 years and an average burnup $\leq$ 30,000 MWD/MTU
ii. Array/Class 8x8F	Cooling time $\geq$ 10 years and an average burnup $\leq$ 27,500 MWD/MTU.
iii. Array/Classes 10x10D and 10x10E	Cooling time $\geq$ 10 years and an average burnup $\leq$ 22,500 MWD/MTU.
iv. All Other Array/Classes	As specified in Tables 2.1-4 or 2.1-6.

Table 2.1-1 (page 4 of 33)
Fuel Assembly Limits

II. MPC MODEL: MPC-68 (continued)

A. Allowable Contents (continued)

e. Decay Heat Per Assembly:

i.	Array/Classes 6x6A, 6x6C, 7x7A, and 8x8A	≤ 115 Watts
ii.	Array/Class 8x8F	≤ 183.5 Watts.
iii.	Array/Classes 10x10D and 10x10E	≤ 95 Watts
iv.	All Other Array/Classes	As specified in Tables 2.1-5 or 2.1-7.

f. Fuel Assembly Length: ≤ 176.5 inches (nominal design)

g. Fuel Assembly Width: ≤ 5.85 inches (nominal design)

h. Fuel Assembly Weight: ≤ 700 lbs, including channels

Table 2.1-1 (page 5 of 33)
Fuel Assembly Limits

II. MPC MODEL: MPC-68 (continued)

A. Allowable Contents (continued)

2. Uranium oxide, BWR DAMAGED FUEL ASSEMBLIES, with or without channels, placed in DAMAGED FUEL CONTAINERS. Uranium oxide BWR DAMAGED FUEL ASSEMBLIES shall meet the criteria specified in Table 2.1-3 and meet the following specifications:

a. Cladding Type:	Zircaloy (Zr) or Stainless Steel (SS) as specified in Table 2.1-3 for the applicable fuel assembly array/class.
b. Maximum PLANAR-AVERAGE INITIAL ENRICHMENT:	
i. Array/Classes 6x6A, 6x6C, 7x7A, and 8x8A	As specified in Table 2.1-3 for the applicable fuel assembly array/class.
ii. All Other Array/Classes specified in Table 2.1-3	4.0 wt% ^{235}U
c. Initial Maximum Rod Enrichment:	As specified in Table 2.1-3 for the applicable fuel assembly array/class.
d. Post-irradiation Cooling Time and Average Burnup Per Assembly:	
i. Array/Classes 6x6A, 6x6C, 7x7A,and 8x8A	Cooling time $\geq$ 18 years and an average burnup $\leq$ 30,000 MWD/MTU.
ii. Array/Class 8x8F	Cooling time $\geq$ 10 years and an average burnup $\leq$ 27,500 MWD/MTU.
iii. Array/Classes 10x10D and 10x10E	Cooling time $\geq$ 10 years and an average burnup $\leq$ 22,500 MWD/MTU.
iv. All Other Array Classes	As specified in Tables 2.1-4 or 2.1-6.

Table 2.1-1 (page 6 of 33)
Fuel Assembly Limits

II. MPC MODEL: MPC-68 (continued)

A. Allowable Contents (continued)

e. Decay Heat Per Assembly:

i.	Array/Class 6x6A, 6x6C, 7x7A, and 8x8A	≤ 115 Watts
ii.	Array/Class 8x8F	≤ 183.5 Watts
iii.	Array/Classes 10x10D and 10x10E	≤ 95 Watts
iv.	All Other Array/Classes	As specified in Tables 2.1-5 or 2.1-7

f. Fuel Assembly Length:

i.	Array/Class 6x6A, 6x6C, 7x7A, or 8x8A	≤ 135.0 inches (nominal design)
ii.	All Other Array/Classes	≤ 176.5 inches (nominal design)

g. Fuel Assembly Width:

i.	Array/Class 6x6A, 6x6C, 7x7A, or 8x8A	≤ 4.70 inches (nominal design)
ii.	All Other Array/Classes	≤ 5.85 inches (nominal design)

h. Fuel Assembly Weight:

i.	Array/Class 6x6A, 6x6C, 7x7A, or 8x8A	≤ 550 lbs, including channels and DFC
ii.	All Other Array/Classes	≤ 700 lbs, including channels and DFC

Table 2.1-1 (page 7 of 33)
Fuel Assembly Limits

II. MPC MODEL: MPC-68 (continued)

A. Allowable Contents (continued)

3. Mixed oxide (MOX), BWR INTACT FUEL ASSEMBLIES, with or without channels. MOX BWR INTACT FUEL ASSEMBLIES shall meet the criteria specified in Table 2.1-3 for fuel assembly array/class 6x6B, and meet the following specifications:

a. Cladding Type:	Zircaloy (Zr)
b. Maximum PLANAR-AVERAGE INITIAL ENRICHMENT:	As specified in Table 2.1-3 for fuel assembly array/class 6x6B.
c. Initial Maximum Rod Enrichment:	As specified in Table 2.1-3 for fuel assembly array/class 6x6B.
d. Post-irradiation Cooling Time and Average Burnup Per Assembly:	Cooling time ≥ 18 years and an average burnup ≤ 30,000 MWD/MTIHM.
e. Decay Heat Per Assembly:	≤ 115 Watts
f. Fuel Assembly Length:	≤ 135.0 inches (nominal design)
g. Fuel Assembly Width:	≤ 4.70 inches (nominal design)
h. Fuel Assembly Weight:	≤ 400 lbs, including channels

Table 2.1-1 (page 8 of 33)
Fuel Assembly Limits

II. MPC MODEL: MPC-68 (continued)

A. Allowable Contents (continued)

4. Mixed oxide (MOX), BWR DAMAGED FUEL ASSEMBLIES, with or without channels, placed in DAMAGED FUEL CONTAINERS. MOX BWR DAMAGED FUEL ASSEMBLIES shall meet the criteria specified in Table 2.1-3 for fuel assembly array/class 6x6B, and meet the following specifications:

a. Cladding Type:	Zircaloy (Zr)
b. Maximum PLANAR-AVERAGE INITIAL ENRICHMENT:	As specified in Table 2.1-3 for array/class 6x6B.
c. Initial Maximum Rod Enrichment:	As specified in Table 2.1-3 for array/class 6x6B.
d. Post-irradiation Cooling Time and Average Burnup Per Assembly:	Cooling time ≥ 18 years and an average burnup ≤ 30,000 MWD/MTIHM.
e. Decay Heat Per Assembly:	≤ 115 Watts
f. Fuel Assembly Length:	≤ 135.0 inches (nominal design)
g. Fuel Assembly Width:	≤ 4.70 inches (nominal design)
h. Fuel Assembly Weight:	≤ 550 lbs, including channels and DFC

Table 2.1-1 (page 9 of 33)
Fuel Assembly Limits

II. MPC MODEL: MPC-68 (continued)

A. Allowable Contents (continued)

5. Thoria rods (ThO_2 and UO_2) placed in Dresden Unit 1 Thoria Rod Canisters and meeting the following specifications:

a. Cladding Type:	Zircaloy (Zr)
b. Composition:	98.2 wt.% ThO_2, 1.8 wt. % UO_2 with an enrichment of 93.5 wt. % ^{235}U.
c. Number of Rods Per Thoria Rod Canister:	$\leq$ 18
d. Decay Heat Per Thoria Rod Canister:	$\leq$ 115 Watts
e. Post-irradiation Fuel Cooling Time and Average Burnup Per Thoria Rod Canister:	A fuel post-irradiation cooling time $\geq$ 18 years and an average burnup $\leq$ 16,000 MWD/MTIHM.
f. Initial Heavy Metal Weight:	$\leq$ 27 kg/canister
g. Fuel Cladding O.D.:	$\geq$ 0.412 inches
h. Fuel Cladding I.D.:	$\leq$ 0.362 inches
i. Fuel Pellet O.D.:	$\leq$ 0.358 inches
j. Active Fuel Length:	$\leq$ 111 inches
k. Canister Weight:	$\leq$ 550 lbs, including fuel

Table 2.1-1 (page 10 of 33)
Fuel Assembly Limits

II. MPC MODEL: MPC-68 (continued)

B. Quantity per MPC:

1. Up to one (1) Dresden Unit 1 Thoria Rod Canister;

2. Up to 68 array/class 6x6A, 6x6B, 6x6C, 7x7A, or 8x8A DAMAGED FUEL ASSEMBLIES in DAMAGED FUEL CONTAINERS;

3. Up to sixteen (16) other BWR DAMAGED FUEL ASSEMBLIES in DAMAGED FUEL CONTAINERS in fuel storage locations 1, 2, 3, 8, 9, 16, 25, 34, 35, 44, 53, 60, 61, 66, 67, and/or 68; and/or

4. Any number of BWR INTACT FUEL ASSEMBLIES up to a total of 68.

C. Array/Class 10x10D and 10x10E fuel assemblies in stainless steel channels must be stored in fuel storage locations 19 - 22, 28 - 31, 38 -41, and/or 47 - 50.

D. Dresden Unit 1 fuel assemblies with one Antimony-Beryllium neutron source are authorized for loading in the MPC-68. The Antimony-Beryllium source material shall be in a water rod location.

E. FUEL DEBRIS is not authorized for loading in the MPC-68.

Table 2.1-1 (page 11 of 33)
Fuel Assembly Limits

III. MPC MODEL: MPC-68F

A. Allowable Contents

1. Uranium oxide, BWR INTACT FUEL ASSEMBLIES, with or without Zircaloy channels. Uranium oxide BWR INTACT FUEL ASSEMBLIES shall meet the criteria specified in Table 2.1-3 for fuel assembly array class 6x6A, 6x6C, 7x7A or 8x8A, and meet the following specifications:

a. Cladding Type:	Zircaloy (Zr)
b Maximum PLANAR-AVERAGE INITIAL ENRICHMENT:	As specified in Table 2.1-3 for the applicable fuel assembly array/class.
c. Initial Maximum Rod Enrichment:	As specified in Table 2.1-3 for the applicable fuel assembly array/class.
d. Post-irradiation Cooling Time and Average Burnup Per Assembly:	Cooling time ≥ 18 years and an average burnup ≤ 30,000 MWD/MTU.
e. Decay Heat Per Assembly	≤ 115 Watts
f. Fuel Assembly Length:	≤ 135.0 inches (nominal design)
g. Fuel Assembly Width:	≤ 4.70 inches (nominal design)
h. Fuel Assembly Weight:	≤ 400 lbs, including channels

Table 2.1-1 (page 12 of 33)
Fuel Assembly Limits

III. MPC MODEL: MPC-68F (continued)

A. Allowable Contents (continued)

2. Uranium oxide, BWR DAMAGED FUEL ASSEMBLIES, with or without Zircaloy channels, placed in DAMAGED FUEL CONTAINERS. Uranium oxide BWR DAMAGED FUEL ASSEMBLIES shall meet the criteria specified in Table 2.1-3 for fuel assembly array/class 6x6A, 6x6C, 7x7A, or 8x8A, and meet the following specifications:

a. Cladding Type:	Zircaloy (Zr)
b. Maximum PLANAR-AVERAGE INITIAL ENRICHMENT:	As specified in Table 2.1-3 for the applicable fuel assembly array/class.
c. Initial Maximum Rod Enrichment:	As specified in Table 2.1-3 for the applicable fuel assembly array/class.
d. Post-irradiation Cooling Time and Average Burnup Per Assembly:	Cooling time ≥ 18 years and an average burnup ≤ 30,000 MWD/MTU.
e. Decay Heat Per Assembly:	≤ 115 Watts
f. Fuel Assembly Length:	≤ 135.0 inches (nominal design)
g. Fuel Assembly Width:	≤ 4.70 inches (nominal design)
h. Fuel Assembly Weight:	≤ 550 lbs, including channels and DFC

Table 2.1-1 (page 13 of 33)
Fuel Assembly Limits

III. MPC MODEL: MPC-68F (continued)

A. Allowable Contents (continued)

3. Uranium oxide, BWR FUEL DEBRIS, with or without Zircaloy channels, placed in DAMAGED FUEL CONTAINERS. The original fuel assemblies for the uranium oxide BWR FUEL DEBRIS shall meet the criteria specified in Table 2.1-3 for fuel assembly array/class 6x6A, 6x6C, 7x7A, or 8x8A, and meet the following specifications:

a. Cladding Type:	Zircaloy (Zr)
b. Maximum PLANAR-AVERAGE INITIAL ENRICHMENT:	As specified in Table 2.1-3 for the applicable original fuel assembly array/class.
c Initial Maximum Rod Enrichment:	As specified in Table 2.1-3 for the applicable original fuel assembly array/class.
d. Post-irradiation Cooling Time and Average Burnup Per Assembly	Cooling time $\geq$ 18 years and an average burnup $\leq$ 30,000 MWD/MTU for the original fuel assembly.
e. Decay Heat Per Assembly	$\leq$ 115 Watts
f. Original Fuel Assembly Length	$\leq$ 135.0 inches (nominal design)
g. Original Fuel Assembly Width	$\leq$ 4.70 inches (nominal design)
h. Fuel Debris Weight	$\leq$ 550 lbs, including channels and DFC

Table 2.1-1 (page 14 of 33)
Fuel Assembly Limits

III. MPC MODEL: MPC-68F (continued)

A. Allowable Contents (continued)

4. Mixed oxide (MOX), BWR INTACT FUEL ASSEMBLIES, with or without Zircaloy channels. MOX BWR INTACT FUEL ASSEMBLIES shall meet the criteria specified in Table 2.1-3 for fuel assembly array/class 6x6B, and meet the following specifications:

a. Cladding Type:	Zircaloy (Zr)
b. Maximum PLANAR-AVERAGE INITIAL ENRICHMENT:	As specified in Table 2.1-3 for fuel assembly array/class 6x6B.
c. Initial Maximum Rod Enrichment:	As specified in Table 2.1-3 for fuel assembly array/class 6x6B.
d. Post-irradiation Cooling Time and Average Burnup Per Assembly:	Cooling time ≥ 18 years and an average burnup ≤ 30,000 MWD/MTIHM.
e. Decay Heat Per Assembly	≤ 115 Watts
f. Fuel Assembly Length:	≤ 135.0 inches (nominal design)
g. Fuel Assembly Width:	≤ 4.70 inches (nominal design)
h. Fuel Assembly Weight:	≤ 400 lbs, including channels

Table 2.1-1 (page 15 of 33)
Fuel Assembly Limits

III. MPC MODEL: MPC-68F (continued)

A. Allowable Contents (continued)

5. Mixed oxide (MOX), BWR DAMAGED FUEL ASSEMBLIES, with or without Zircaloy channels, placed in DAMAGED FUEL CONTAINERS. MOX BWR DAMAGED FUEL ASSEMBLIES shall meet the criteria specified in Table 2.1-3 for fuel assembly array/class 6x6B, and meet the following specifications:

a. Cladding Type:	Zircaloy (Zr)
b. Maximum PLANAR-AVERAGE INITIAL ENRICHMENT:	As specified in Table 2.1-3 for fuel assembly array/class 6x6B.
c. Initial Maximum Rod Enrichment:	As specified in Table 2.1-3 for fuel assembly array/class 6x6B.
d. Post-irradiation Cooling Time and Average Burnup Per Assembly:	Cooling time ≥ 18 years and an average burnup ≤ 30,000 MWD/MTIHM.
e. Decay Heat Per Assembly	≤ 115 Watts
f. Fuel Assembly Length:	≤ 135.0 inches (nominal design)
g. Fuel Assembly Width:	≤ 4.70 inches (nominal design)
h. Fuel Assembly Weight:	≤ 550 lbs, including channels and DFC

Table 2.1-1 (page 16 of 33)
Fuel Assembly Limits

III. MPC MODEL: MPC-68F (continued)

A. Allowable Contents (continued)

6. Mixed Oxide (MOX), BWR FUEL DEBRIS, with or without Zircaloy channels, placed in DAMAGED FUEL CONTAINERS. The original fuel assemblies for the MOX BWR FUEL DEBRIS shall meet the criteria specified in Table 2.1-3 for fuel assembly array/class 6x6B, and meet the following specifications:

a. Cladding Type:	Zircaloy (Zr)
b. Maximum PLANAR-AVERAGE INITIAL ENRICHMENT:	As specified in Table 2.1-3 for original fuel assembly array/class 6x6B.
c. Initial Maximum Rod Enrichment:	As specified in Table 2.1-3 for original fuel assembly array/class 6x6B.
d. Post-irradiation Cooling Time and Average Burnup Per Assembly:	Cooling time ≥ 18 years and an average burnup ≤ 30,000 MWD/MTIHM for the original fuel assembly.
e. Decay Heat Per Assembly	≤ 115 Watts
f. Original Fuel Assembly Length:	≤ 135.0 inches (nominal design)
g. Original Fuel Assembly Width:	≤ 4.70 inches (nominal design)
h. Fuel Debris Weight:	≤ 550 lbs, including channels and DFC

Table 2.1-1 (page 17 of 33)
Fuel Assembly Limits

III. MPC MODEL: MPC-68F (continued)

A. Allowable Contents (continued)

7. Thoria rods (ThO_2 and UO_2) placed in Dresden Unit 1 Thoria Rod Canisters and meeting the following specifications:

a. Cladding Type:	Zircaloy (Zr)
b. Composition:	98.2 wt.% ThO_2, 1.8 wt. % UO_2 with an enrichment of 93.5 wt. % ^{235}U.
c. Number of Rods Per Thoria Rod Canister:	$\leq$ 18
d. Decay Heat Per Thoria Rod Canister:	$\leq$ 115 Watts
e. Post-irradiation Fuel Cooling Time and Average Burnup Per Thoria Rod Canister:	A fuel post-irradiation cooling time $\geq$ 18 years and an average burnup $\leq$ 16,000 MWD/MTIHM.
f. Initial Heavy Metal Weight:	$\leq$ 27 kg/canister
g. Fuel Cladding O.D.:	$\geq$ 0.412 inches
h. Fuel Cladding I.D.:	$\leq$ 0.362 inches
i. Fuel Pellet O.D.:	$\leq$ 0.358 inches
j. Active Fuel Length:	$\leq$ 111 inches
k. Canister Weight:	$\leq$ 550 lbs, including fuel

Table 2.1-1 (page 18 of 33)
Fuel Assembly Limits

III. MPC MODEL: MPC-68F (continued)

B. Quantity per MPC (up to a total of 68 assemblies):
(All fuel assemblies must be array/class 6x6A, 6x6B, 6x6C, 7x7A, or 8x8A):

Up to four (4) DFCs containing uranium oxide BWR FUEL DEBRIS or MOX BWR FUEL DEBRIS. The remaining MPC-68F fuel storage locations may be filled with fuel assemblies of the following type, as applicable:

1. Uranium oxide BWR INTACT FUEL ASSEMBLIES;

2. MOX BWR INTACT FUEL ASSEMBLIES;

3. Uranium oxide BWR DAMAGED FUEL ASSEMBLIES placed in DFCs;

4. MOX BWR DAMAGED FUEL ASSEMBLIES placed in DFCs; or

5. Up to one (1) Dresden Unit 1 Thoria Rod Canister.

C. Fuel assemblies with stainless steel channels are not authorized for loading in the MPC-68F.

D. Dresden Unit 1 fuel assemblies with one Antimony-Beryllium neutron source are authorized for loading in the MPC-68F. The Antimony-Beryllium source material shall be in a water rod location.

Table 2.1-1 (page 19 of 33)
Fuel Assembly Limits

IV. MPC MODEL: MPC-24E

A. Allowable Contents

1. Uranium oxide, PWR INTACT FUEL ASSEMBLIES listed in Table 2.1-2, with or without NON-FUEL HARDWARE and meeting the following specifications (Note 1):

a. Cladding Type:	Zircaloy (Zr) or Stainless Steel (SS) as specified in Table 2.1-2 for the applicable fuel assembly array/class
b. Initial Enrichment:	As specified in Table 2.1-2 for the applicable fuel assembly array/class.
c. Post-irradiation Cooling Time and Average Burnup Per Assembly:	
i. Array/Classes 14x14D, 14x14E, and 15x15G	Cooling time $\geq$ 8 years and an average burnup $\leq$ 40,000 MWD/MTU.
ii. All Other Array/Classes	As specified in Tables 2.1-4 or 2.1-6.
iii. NON-FUEL HARDWARE	As specified in Table 2.1-8.

Table 2.1-1 (page 20 of 33)
Fuel Assembly Limits

IV. MPC MODEL: MPC-24E (continued)

A. Allowable Contents (continued)

d. Decay Heat Per Assembly:	
i. Array/Classes 14x14D, 14x14E, and 15x15G	≤ 710 Watts.
ii. All other Array/Classes	As specified in Tables 2.1-5 or 2.1-7.
e. Fuel Assembly Length:	≤ 176.8 inches (nominal design)
f. Fuel Assembly Width:	≤ 8.54 inches (nominal design)
g. Fuel Assembly Weight:	≤ 1,680 lbs (including NON-FUEL HARDWARE)

Table 2.1-1 (page 21 of 33)
Fuel Assembly Limits

IV. MPC MODEL: MPC-24E (continued)

A. Allowable Contents (continued)

2. Uranium oxide, PWR DAMAGED FUEL ASSEMBLIES, with or without NON-FUEL HARDWARE, placed in DAMAGED FUEL CONTAINERS. Uranium oxide PWR DAMAGED FUEL ASSEMBLIES shall meet the criteria specified in Table 2.1-2 and meet the following specifications (Note 1):

a. Cladding Type:	Zircaloy (Zr) or Stainless Steel (SS) as specified in Table 2.1-2 for the applicable fuel assembly array/class
b. Initial Enrichment:	$\leq$ 4.0 wt% ^{235}U.
c. Post-irradiation Cooling Time and Average Burnup Per Assembly:	
i. Array/Classes 14x14D, 14x14E, and 15x15G	Cooling time $\geq$ 8 years and an average burnup $\leq$ 40,000 MWD/MTU.
ii. All Other Array/Classes	As specified in Tables 2.1-4 or 2.1-6.
iii. NON-FUEL HARDWARE	As specified in Table 2.1-8.

Table 2.1-1 (page 22 of 33)
Fuel Assembly Limits

IV. MPC MODEL: MPC-24E (continued)

A. Allowable Contents (continued)

d. Decay Heat Per Assembly

i. Array/Classes 14x14D, 14x14E, and 15x15G	≤ 710 Watts.
ii. All Other Array/Classes	As specified in Tables 2.1-5 or 2.1-7.
e. Fuel Assembly Length	≤ 176.8 inches (nominal design)
f. Fuel Assembly Width	≤ 8.54 inches (nominal design)
g. Fuel Assembly Weight	≤ 1,680 lbs (including NON-FUEL HARDWARE and DFC)

B. Quantity per MPC: Up to four (4) DAMAGED FUEL ASSEMBLIES in DAMAGED FUEL CONTAINERS, stored in fuel storage locations 3, 6, 19 and/or 22. The remaining MPC-24E fuel storage locations may be filled with PWR INTACT FUEL ASSEMBLIES meeting the applicable specifications.

C. FUEL DEBRIS is not authorized for loading in the MPC-24E.

Note 1: Fuel assemblies containing BPRAs, TPDs, WABAs, water displacement guide tube plugs, or orifice rod assemblies may be stored in any fuel cell location. Fuel assemblies containing CRAs, RCCAs, CEAs, or APSRs may only be loaded in fuel storage locations 9, 10, 15, and/or 16. These requirements are in addition to any other requirements specified for uniform or regionalized fuel loading.

Table 2.1-1 (page 23 of 33)
Fuel Assembly Limits

V. MPC MODEL: MPC-32

A. Allowable Contents

1. Uranium oxide, PWR INTACT FUEL ASSEMBLIES listed in Table 2.1-2, with or without NON-FUEL HARDWARE and meeting the following specifications (Note 1):

a. Cladding Type:	Zircaloy (Zr) or Stainless Steel (SS) as specified in Table 2.1-2 for the applicable fuel assembly array/class
b. Initial Enrichment:	As specified in Table 2.1-2 for the applicable fuel assembly array/class.
c. Post-irradiation Cooling Time and Average Burnup Per Assembly	
i. Array/Classes 14x14D, 14x14E, and 15x15G	Cooling time ≥ 9 years and an average burnup ≤ 30,000 MWD/MTU or cooling time ≥ 20 years and an average burnup ≤ 40,000 MWD/MTU.
ii. All Other Array/Classes	As specified in Tables 2.1-4 or 2.1-6.
iii. NON-FUEL HARDWARE	As specified in Table 2.1-8.

Table 2.1-1 (page 24 of 33)
Fuel Assembly Limits

V. MPC MODEL: MPC-32 (continued)

A. Allowable Contents (continued)

d. Decay Heat Per Assembly

i. Array/Classes 14x14D, 14x14E, and 15x15G	≤ 500 Watts
ii. All Other Array/Classes	As specified in Tables 2.1-5 or 2.1-7.
e. Fuel Assembly Length	≤ 176.8 inches (nominal design)
f. Fuel Assembly Width	≤ 8.54 inches (nominal design)
g. Fuel Assembly Weight	≤ 1,680 lbs (including NON-FUEL HARDWARE)

B. Quantity per MPC: Up to 32 PWR INTACT FUEL ASSEMBLIES.

C. DAMAGED FUEL ASSEMBLIES and FUEL DEBRIS are not authorized for loading in the MPC-32.

Note 1: Fuel assemblies containing BPRAs, TPDs, WABAs, water displacement guide tube plugs, or orifice rod assemblies may be stored in any fuel cell location. Fuel assemblies containing CRAs, RCCAs, CEAs, or APSRs may only be loaded in fuel storage locations 13, 14, 19, and/or 20. These requirements are in addition to any other requirements specified for uniform or regionalized fuel loading.

Table 2.1-1 (page 25 of 33)
Fuel Assembly Limits

VI. MPC MODEL: MPC-68FF

A. Allowable Contents

1. Uranium oxide or MOX BWR INTACT FUEL ASSEMBLIES listed in Table 2.1-3, with or without channels and meeting the following specifications:

a. Cladding Type:	Zircaloy (Zr) or Stainless Steel (SS) as specified in Table 2.1-3 for the applicable fuel assembly array/class
b. Maximum PLANAR-AVERAGE INITIAL ENRICHMENT:	As specified in Table 2.1-3 for the applicable fuel assembly array/class.
c. Initial Maximum Rod Enrichment	As specified in Table 2.1-3 for the applicable fuel assembly array/class.
d. Post-irradiation Cooling Time and Average Burnup Per Assembly	
i. Array/Classes 6x6A, 6x6B, 6x6C, 7x7A, and 8x8A	Cooling time $\geq$ 18 years and an average burnup $\leq$ 30,000 MWD/MTU (or MTU/MTIHM).
ii. Array/Class 8x8F	Cooling time $\geq$ 10 years and an average burnup $\leq$ 27,500 MWD/MTU.
iii. Array/Classes 10x10D and 10x10E	Cooling time $\geq$ 10 years and an average burnup $\leq$ 22,500 MWD/MTU.
iv. All Other Array/Classes	As specified in Tables 2.1-4 or 2.1-6.

Table 2.1-1 (page 26 of 33)
Fuel Assembly Limits

VI. MPC MODEL: MPC-68FF (continued)

A. Allowable Contents (continued)

e. Decay Heat Per Assembly

i. Array/Classes 6x6A, 6X6b, 6x6C, 7x7A, and 8x8A	≤ 115 Watts
ii. Array/Class 8x8F	≤ 183.5 Watts
iii. Array/Classes 10x10D and 10x10E	≤ 95 Watts
iv. All Other Array/Classes	As specified in Tables 2.1-5 or 2.1-7.

f. Fuel Assembly Length

i. Array/Class 6x6A, 6x6B, 6x6C, 7x7A, or 8x8A	≤ 135.0 inches (nominal design)
ii. All Other Array/Classes	≤ 176.5 inches (nominal design)

g. Fuel Assembly Width

i. Array/Class 6x6A, 6x6B, 6x6C, 7x7A, or 8x8A	≤ 4.70 inches (nominal design)
ii. All Other Array/Classes	≤ 5.85 inches (nominal design)

h. Fuel Assembly Weight

i. Array/Class 6x6A, 6x6B, 6x6C, 7x7A, or 8x8A	≤ 550 lbs, including channels and DFC
ii. All Other Array/Classes	≤ 700 lbs, including channels and DFC

Table 2.1-1 (page 27 of 33)
Fuel Assembly Limits

VI. MPC MODEL: MPC-68FF (continued)

A. Allowable Contents (continued)

2. Uranium oxide or MOX BWR DAMAGED FUEL ASSEMBLIES or FUEL DEBRIS, with or without channels, placed in DAMAGED FUEL CONTAINERS. Uranium oxide and MOX BWR DAMAGED FUEL ASSEMBLIES and FUEL DEBRIS shall meet the criteria specified in Table 2.1-3, and meet the following specifications:

a. Cladding Type:	Zircaloy (Zr) or Stainless Steel (SS) in accordance with Table 2.1-3 for the applicable fuel assembly array/class.
b. Maximum PLANAR-AVERAGE INITIAL ENRICHMENT:	
i. Array/Classes 6x6A, 6x6B, 6x6C, 7x7A, and 8x8A.	As specified in Table 2.1-3 for the applicable fuel assembly array/class.
ii. All Other Array Classes	$\leq$ 4.0 wt.% ^{235}U.
c. Initial Maximum Rod Enrichment	As specified in Table 2.1-3 for the applicable fuel assembly array/class.
d. Post-irradiation Cooling Time and Average Burnup Per Assembly:	
i. Array/Class 6x6A, 6x6B, 6x6C, 7x7A, or 8x8A	Cooling time $\geq$ 18 years and an average burnup $\leq$ 30,000 MWD/MTU (or MWD/MTIHM).
ii. Array/Class 8x8F	Cooling time $\geq$ 10 years and an average burnup $\leq$ 27,500 MWD/MTU.
iii. Array/Class 10x10D and 10x10E	Cooling time $\geq$ 10 years and an average burnup $\leq$ 22,500 MWD/MTU.
iv. All Other Array/Classes	As specified in Tables 2.1-4 or 2.1-6.

Table 2.1-1 (page 28 of 33)
Fuel Assembly Limits

VI. MPC MODEL: MPC-68FF (continued)

A. Allowable Contents (continued)

e. Decay Heat Per Assembly

i.	Array/Class 6x6A, 6x6B, 6x6C, 7x7A, or 8x8A	≤ 115 Watts
ii.	Array/Class 8x8F	≤ 183.5 Watts
iii.	Array/Classes 10x10D and 10x10E	≤ 95 Watts
iv.	All Other Array/Classes	As specified in Tables 2.1-5 or 2.1-7

f. Fuel Assembly Length

i.	Array/Class 6x6A, 6x6B, 6x6C, 7x7A, or 8x8A	≤ 135.0 inches (nominal design)
ii.	All Other Array/Classes	≤ 176.5 inches (nominal design)

g. Fuel Assembly Width

i.	Array/Class 6x6A, 6x6B, 6x6C, 7x7A, or 8x8A	≤ 4.70 inches (nominal design)
ii.	All Other Array/Classes	≤ 5.85 inches (nominal design)

h. Fuel Assembly Weight

i.	Array/Class 6x6A, 6x6B, 6x6C, 7x7A, or 8x8A	≤ 550 lbs, including channels and DFC
ii.	All Other Array/Classes	≤ 700 lbs, including channels and DFC

Table 2.1-1 (page 29 of 33)
Fuel Assembly limits

VI. MPC MODEL: MPC-68FF (continued)

B. Quantity per MPC (up to a total of 68 assemblies)

1. For fuel assembly array/classes 6x6A, 6X6B, 6x6C, 7x7A, or 8x8A, up to 68 BWR INTACT FUEL ASSEMBLIES and/or DAMAGED FUEL ASSEMBLIES. Up to eight (8) DFCs containing FUEL DEBRIS from these array/classes may be stored.

2. For all other array/classes, up to sixteen (16) DFCs containing BWR DAMAGED FUEL ASSEMBLIES and/or up to eight (8) DFCs containing FUEL DEBRIS. DFCs shall be located only in fuel storage locations 1, 2, 3, 8, 9, 16, 25, 34, 35, 44, 53, 60, 61, 66, 67, and/or 68. The remaining MPC-68FF fuel storage locations may be filled with fuel assemblies of the following type:

   i. Uranium Oxide BWR INTACT FUEL ASSEMBLIES; or

   ii. MOX BWR INTACT FUEL ASSEMBLIES.

C. Dresden Unit 1 fuel assemblies with one Antimony-Beryllium neutron source are authorized for loading in the MPC-68FF. The Antimony-Beryllium source material shall be in a water rod location.

D. Array/Class 10x10D and 10x10E fuel assemblies in stainless steel channels must be stored in fuel storage locations 19 - 22, 28 - 31, 38 -41, and/or 47 - 50.

Table 2.1-1 (page 30 of 33)
Fuel Assembly Limits

VII. MPC MODEL: MPC-24EF

A. Allowable Contents

1. Uranium oxide, PWR INTACT FUEL ASSEMBLIES listed in Table 2.1-2, with or without NON-FUEL HARDWARE and meeting the following specifications (Note 1):

a. Cladding Type:	Zircaloy (Zr) or Stainless Steel (SS) as specified in Table 2.1-2 for the applicable fuel assembly array/class
b. Initial Enrichment:	As specified in Table 2.1-2 for the applicable fuel assembly array/class.
c. Post-irradiation Cooling Time and Average Burnup Per Assembly:	
i. Array/Classes 14x14D, 14x14E, and 15x15G	Cooling time $\geq$ 8 years and an average burnup $\leq$ 40,000 MWD/MTU.
ii. All Other Array/Classes	As specified in Tables 2.1-4 or 2.1-6.
iii. NON-FUEL HARDWARE	As specified in Table 2.1-8.

Table 2.1-1 (page 31 of 33)
Fuel Assembly Limits

VII. MPC MODEL: MPC-24EF (continued)

A. Allowable Contents (continued)

d. Decay Heat Per Assembly:	
i. Array/Classes 14x14D, 14x14E, and 15x15G	≤ 710 Watts.
ii. All other Array/Classes	As specified in Tables 2.1-5 or 2.1-7.
e. Fuel Assembly Length:	≤ 176.8 inches (nominal design)
f. Fuel Assembly Width:	≤ 8.54 inches (nominal design)
g. Fuel Assembly Weight:	≤ 1,680 lbs (including NON-FUEL HARDWARE)

Table 2.1-1 (page 32 of 33)
Fuel Assembly Limits

VII. MPC MODEL: MPC-24EF (continued)

A. Allowable Contents (continued)

2. Uranium oxide, PWR DAMAGED FUEL ASSEMBLIES and FUEL DEBRIS, with or without NON-FUEL HARDWARE, placed in DAMAGED FUEL CONTAINERS. Uranium oxide PWR DAMAGED FUEL ASSEMBLIES and FUEL DEBRIS shall meet the criteria specified in Table 2.1-2 and meet the following specifications (Note 1):

a. Cladding Type:	Zircaloy (Zr) or Stainless Steel (SS) as specified in Table 2.1-2 for the applicable fuel assembly array/class
b. Initial Enrichment:	$\leq$ 4.0 wt% ^{235}U.
c. Post-irradiation Cooling Time and Average Burnup Per Assembly:	
i. Array/Classes 14x14D, 14x14E, and 15x15G	Cooling time $\geq$ 8 years and an average burnup $\leq$ 40,000 MWD/MTU.
ii. All Other Array/Classes	As specified in Tables 2.1-4 or 2.1-6.
iii. NON-FUEL HARDWARE	As specified in Table 2.1-8.

Table 2.1-1 (page 33 of 33)
Fuel Assembly Limits

VII. MPC MODEL: MPC-24EF (continued)

A. Allowable Contents (continued)

d. Decay Heat Per Assembly	
i. Array/Classes 14x14D, 14x14E, and 15x15G	≤ 710 Watts.
ii. All Other Array/Classes	As specified in Tables 2.1-5 or 2.1-7.
e. Fuel Assembly Length	≤ 176.8 inches (nominal design)
f. Fuel Assembly Width	≤ 8.54 inches (nominal design)
g. Fuel Assembly Weight	≤ 1,680 lbs (including NON-FUEL HARDWARE and DFC)

B. Quantity per MPC: Up to four (4) DAMAGED FUEL ASSEMBLIES and/or FUEL DEBRIS in DAMAGED FUEL CONTAINERS, stored in fuel storage locations 3, 6, 19 and/or 22. The remaining MPC-24EF fuel storage locations may be filled with PWR INTACT FUEL ASSEMBLIES meeting the applicable specifications.

Note 1: Fuel assemblies containing BPRAs, TPDs, WABAs, water displacement guide tube plugs, or orifice rod assemblies may be stored in any fuel cell location. Fuel assemblies containing CRAs, RCCAs, CEAs, or APSRs may only be loaded in fuel storage locations 9, 10, 15, and/or 16. These requirements are in addition to any other requirements specified for uniform or regionalized fuel loading.

Table 2.1-2 (page 1 of 4)
PWR FUEL ASSEMBLY CHARACTERISTICS (Note 1)

Fuel Assembly Array/Class	**14x14A**	**14x14B**	**14x14C**	**14x14D**	**14x14E**
Clad Material (Note 2)	Zr	Zr	Zr	SS	SS
Design Initial U (kg/assy.) (Note 3)	≤ 407	≤ 407	≤ 425	≤ 400	≤ 206
Initial Enrichment (MPC-24, 24E and 24EF without soluble boron credit) (wt % ^{235}U) (Note 7)	≤ 4.6 (24) ≤ 5.0 (24E/24EF)	≤ 4.6 (24) ≤ 5.0 (24E/24EF)	≤ 4.6 (24) ≤ 5.0 (24E/24EF)	≤ 4.0 (24) ≤ 5.0 (24E/24EF)	≤ 5.0 (24) ≤ 5.0 (24E/24EF)
Initial Enrichment (MPC-24, 24E, 24EF, or 32 with soluble boron credit - see Notes 5 and 7) (wt % ^{235}U)	≤ 5.0	≤ 5.0	≤ 5.0	≤ 5.0	≤ 5.0
No. of Fuel Rod Locations	179	179	176	180	173
Fuel Rod Clad O.D. (in.)	≥ 0.400	≥ 0.417	≥ 0.440	≥ 0.422	≥ 0.3415
Fuel Rod Clad I.D. (in.)	≤ 0.3514	≤ 0.3734	≤ 0.3880	≤ 0.3890	≤ 0.3175
Fuel Pellet Dia. (in.)	≤ 0.3444	≤ 0.3659	≤ 0.3805	≤ 0.3835	≤ 0.3130
Fuel Rod Pitch (in.)	≤ 0.556	≤ 0.556	≤ 0.580	≤ 0.556	Note 6
Active Fuel Length (in.)	≤ 150	≤ 150	≤ 150	≤ 144	≤ 102
No. of Guide and/or Instrument Tubes	17	17	5 (Note 4)	16	0
Guide/Instrument Tube Thickness (in.)	≥ 0.017	≥ 0.017	≥ 0.038	≥ 0.0145	N/A

Table 2.1-2 (page 2 of 4)
PWR FUEL ASSEMBLY CHARACTERISTICS (Note 1)

Fuel Assembly Array/Class	**15x15A**	**15x15B**	**15x15C**	**15x15D**	**15x15E**	**15x15F**
Clad Material (Note 2)	Zr	Zr	Zr	Zr	Zr	Zr
Design Initial U (kg/assy.) (Note 3)	≤ 464	≤ 464	≤ 464	≤ 475	≤ 475	≤ 475
Initial Enrichment (MPC-24, 24E and 24EF without soluble boron credit) (wt % ^{235}U) (Note 7)	≤ 4.1 (24) ≤ 4.5 (24E/24EF)	≤ 4.1 (24) ≤ 4.5 (24E/24EF)	≤ 4.1 (24) ≤ 4.5 (24E/24EF)	≤ 4.1 (24) ≤ 4.5 (24E/24EF)	≤ 4.1 (24) ≤ 4.5 (24E/24EF)	≤ 4.1 (24) ≤ 4.5 (24E/24EF)
Initial Enrichment (MPC-24, 24E, 24EF, or 32 with soluble boron credit - see Notes 5 and 7) (wt % ^{235}U)	≤ 5.0	≤ 5.0	≤ 5.0	≤ 5.0	≤ 5.0	≤ 5.0
No. of Fuel Rod Locations	204	204	204	208	208	208
Fuel Rod Clad O.D. (in.)	≥ 0.418	≥ 0.420	≥ 0.417	≥ 0.430	≥ 0.428	≥ 0.428
Fuel Rod Clad I.D. (in.)	≤ 0.3660	≤ 0.3736	≤ 0.3640	≤ 0.3800	≤ 0.3790	≤ 0.3820
Fuel Pellet Dia. (in.)	≤ 0.3580	≤ 0.3671	≤ 0.3570	≤ 0.3735	≤ 0.3707	≤ 0.3742
Fuel Rod Pitch (in.)	≤ 0.550	≤ 0.563	≤ 0.563	≤ 0.568	≤ 0.568	≤ 0.568
Active Fuel Length (in.)	≤ 150	≤ 150	≤ 150	≤ 150	≤ 150	≤ 150
No. of Guide and/or Instrument Tubes	21	21	21	17	17	17
Guide/Instrument Tube Thickness (in.)	≥ 0.0165	≥ 0.015	≥ 0.0165	≥ 0.0150	≥ 0.0140	≥ 0.0140

Table 2.1-2 (page 3 of 4)
PWR FUEL ASSEMBLY CHARACTERISTICS (Note 1)

Fuel Assembly Array/ Class	**15x15G**	**15x15H**	**16x16A**	**17x17A**	**17x17B**	**17x17C**
Clad Material (Note 2)	SS	Zr	Zr	Zr	Zr	Zr
Design Initial U (kg/assy.) (Note 3)	≤ 420	≤ 475	≤ 443	≤ 467	≤ 467	≤ 474
Initial Enrichment (MPC-24, 24E, and 24EF without soluble boron credit) (wt % ^{235}U) (Note 7)	≤ 4.0 (24) ≤ 4.5 (24E/24EF)	≤ 3.8 (24) ≤ 4.2 (24E/24EF)	≤ 4.6 (24) ≤ 5.0 (24E/24EF)	≤ 4.0 (24) ≤ 4.4 (24E/24EF)	≤ 4.0 (24) ≤ 4.4 (24E/24EF)	≤ 4.0 (24) ≤ 4.4 (24E/24EF)
Initial Enrichment (MPC-24, 24E, 24EF, or 32 with soluble boron credit - see Notes 5 and 7) (wt % ^{235}U)	≤ 5.0	≤ 5.0	≤ 5.0	≤ 5.0	≤ 5.0	≤ 5.0
No. of Fuel Rod Locations	204	208	236	264	264	264
Fuel Rod Clad O.D. (in.)	≥ 0.422	≥ 0.414	≥ 0.382	≥ 0.360	≥ 0.372	≥ 0.377
Fuel Rod Clad I.D. (in.)	≤ 0.3890	≤ 0.3700	≤ 0.3320	≤ 0.3150	≤ 0.3310	≤ 0.3330
Fuel Pellet Dia. (in.)	≤ 0.3825	≤ 0.3622	≤ 0.3255	≤ 0.3088	≤ 0.3232	≤ 0.3252
Fuel Rod Pitch (in.)	≤ 0.563	≤ 0.568	≤ 0.506	≤ 0.496	≤ 0.496	≤ 0.502
Active Fuel Length (in.)	≤ 144	≤ 150	≤ 150	≤ 150	≤ 150	≤ 150
No. of Guide and/or Instrument Tubes	21	17	5 (Note 4)	25	25	25
Guide/Instrument Tube Thickness (in.)	≥ 0.0145	≥ 0.0140	≥ 0.0400	≥ 0.016	≥ 0.014	≥ 0.020

Table 2.1-2 (page 4 of 4)
PWR FUEL ASSEMBLY CHARACTERISTICS

Notes:

1. All dimensions are design nominal values. Maximum and minimum dimensions are specified to bound variations in design nominal values among fuel assemblies within a given array/class.

2. Zr designates cladding material made of zirconium or zirconium alloys.

3. Design initial uranium weight is the nominal uranium weight specified for each assembly by the fuel manufacturer or reactor user. For each PWR fuel assembly, the total uranium weight limit specified in this table may be increased up to 2.0 percent for comparison with users' fuel records to account for manufacturer's tolerances.

4. Each guide tube replaces four fuel rods.

5. Soluble boron concentration per LCO 3.3.1.

6. This fuel assembly array/class includes only the Indian Point Unit 1 fuel assembly. This fuel assembly has two pitches in different sectors of the assembly. These pitches are 0.441 inches and 0.453 inches.

7. For those MPCs loaded with both INTACT FUEL ASSEMBLIES and DAMAGED FUEL ASSEMBLIES or FUEL DEBRIS, the maximum initial enrichment of the INTACT FUEL ASSEMBLIES, DAMAGED FUEL ASSEMBLIES and FUEL DEBRIS is 4.0 wt.% ^{235}U.

Table 2.1-3 (page 1 of 5)
BWR FUEL ASSEMBLY CHARACTERISTICS (Note 1)

Fuel Assembly Array/Class	**6x6A**	**6x6B**	**6x6C**	**7x7A**	**7x7B**	**8x8A**
Clad Material (Note 2)	Zr	Zr	Zr	Zr	Zr	Zr
Design Initial U (kg/assy.) (Note 3)	≤ 110	≤ 110	≤ 110	≤ 100	≤ 195	≤ 120
Maximum PLANAR-AVERAGE INITIAL ENRICHMENT (wt.% ^{235}U) (Note 14)	≤ 2.7	≤ 2.7 for the UO_2 rods. See Note 4 for MOX rods	≤ 2.7	≤ 2.7	≤ 4.2	≤ 2.7
Initial Maximum Rod Enrichment (wt.% ^{235}U)	≤ 4.0	≤ 4.0	≤ 4.0	≤ 5.5	≤ 5.0	≤ 4.0
No. of Fuel Rod Locations	35 or 36	35 or 36 (up to 9 MOX rods)	36	49	49	63 or 64
Fuel Rod Clad O.D. (in.)	≥ 0.5550	≥ 0.5625	≥ 0.5630	≥ 0.4860	≥ 0.5630	≥ 0.4120
Fuel Rod Clad I.D. (in.)	≤ 0.5105	≤ 0.4945	≤ 0.4990	≤ 0.4204	≤ 0.4990	≤ 0.3620
Fuel Pellet Dia. (in.)	≤ 0.4980	≤ 0.4820	≤ 0.4880	≤ 0.4110	≤ 0.4910	≤ 0.3580
Fuel Rod Pitch (in.)	≤ 0.710	≤ 0.710	≤ 0.740	≤ 0.631	≤ 0.738	≤ 0.523
Active Fuel Length (in.)	≤ 120	≤ 120	≤ 77.5	≤ 80	≤ 150	≤ 120
No. of Water Rods (Note 11)	1 or 0	1 or 0	0	0	0	1 or 0
Water Rod Thickness (in.)	> 0	> 0	N/A	N/A	N/A	≥ 0
Channel Thickness (in.)	≤ 0.060	≤ 0.060	≤ 0.060	≤ 0.060	≤ 0.120	≤ 0.100

Table 2.1-3 (2 of 5)
BWR FUEL ASSEMBLY CHARACTERISTICS (Note 1)

Fuel Assembly Array/Class	**8x8B**	**8x8C**	**8x8D**	**8x8E**	**8x8F**	**9x9A**
Clad Material (Note 2)	Zr	Zr	Zr	Zr	Zr	Zr
Design Initial U (kg/assy.) (Note 3)	≤ 191	≤ 191	≤ 191	< 191	≤ 191	≤ 179
Maximum PLANAR-AVERAGE INITIAL ENRICHMENT (wt.% ^{235}U) (Note 14)	≤ 4.2	≤ 4.2	≤ 4.2	≤ 4.2	≤ 4.0	≤ 4.2
Initial Maximum Rod Enrichment (wt.% ^{235}U)	≤ 5.0	≤ 5.0	≤ 5.0	≤ 5.0	≤ 5.0	≤ 5.0
No. of Fuel Rod Locations	63 or 64	62	60 or 61	59	64	74/66 (Note 5)
Fuel Rod Clad O.D. (in.)	≥ 0.4840	≥ 0.4830	≥ 0.4830	≥ 0.4930	≥ 0.4576	≥ 0.4400
Fuel Rod Clad I.D. (in.)	≤ 0.4295	≤ 0.4250	≤ 0.4230	≤ 0.4250	≤ 0.3996	≤ 0.3840
Fuel Pellet Dia. (in.)	≤ 0.4195	≤ 0.4160	≤ 0.4140	≤ 0.4160	≤ 0.3913	≤ 0.3760
Fuel Rod Pitch (in.)	≤ 0.642	≤ 0.641	≤ 0.640	≤ 0.640	≤ 0.609	≤ 0.566
Design Active Fuel Length (in.)	≤ 150	≤ 150	≤ 150	≤ 150	≤ 150	≤ 150
No. of Water Rods (Note 11)	1 or 0	2	1 - 4 (Note 7)	5	N/A (Note 12)	2
Water Rod Thickness (in.)	≥ 0.034	> 0.00	> 0.00	≥ 0.034	≥ 0.0315	> 0.00
Channel Thickness (in.)	≤ 0.120	≤ 0.120	≤ 0.120	≤ 0.100	≤ 0.055	≤ 0.120

Table 2.1-3 (page 3 of 5)
BWR FUEL ASSEMBLY CHARACTERISTICS (Note 1)

Fuel Assembly Array/Class	**9x9B**	**9x9C**	**9x9D**	**9x9E (Note 13)**	**9x9F (Note 13)**	**9x9G**
Clad Material (Note 2)	Zr	Zr	Zr	Zr	Zr	Zr
Design Initial U (kg/assy.) (Note 3)	≤ 179	≤ 179	≤ 179	≤ 179	≤ 179	≤ 179
Maximum PLANAR-AVERAGE INITIAL ENRICHMENT (wt.% ^{235}U) (Note 14)	≤ 4.2	≤ 4.2	≤ 4.2	≤ 4.0	≤ 4.0	≤ 4.2
Initial Maximum Rod Enrichment (wt.% ^{235}U)	≤ 5.0	≤ 5.0	≤ 5.0	≤ 5.0	≤ 5.0	≤ 5.0
No. of Fuel Rod Locations	72	80	79	76	76	72
Fuel Rod Clad O.D. (in.)	≥ 0.4330	≥ 0.4230	≥ 0.4240	≥ 0.4170	≥ 0.4430	≥ 0.4240
Fuel Rod Clad I.D. (in.)	≤ 0.3810	≤ 0.3640	≤ 0.3640	≤ 0.3640	≤ 0.3860	≤ 0.3640
Fuel Pellet Dia. (in.)	≤ 0.3740	≤ 0.3565	≤ 0.3565	≤ 0.3530	≤ 0.3745	≤ 0.3565
Fuel Rod Pitch (in.)	≤ 0.572	≤ 0.572	≤ 0.572	≤ 0.572	≤ 0.572	≤ 0.572
Design Active Fuel Length (in.)	≤ 150	≤ 150	≤ 150	≤ 150	≤ 150	≤ 150
No. of Water Rods (Note 11)	1 (Note 6)	1	2	5	5	1 (Note 6)
Water Rod Thickness (in.)	> 0.00	≥ 0.020	≥ 0.0300	≥ 0.0120	≥ 0.0120	≥ 0.0320
Channel Thickness (in.)	≤ 0.120	≤ 0.100	≤ 0.100	≤ 0.120	≤ 0.120	≤ 0.120

Table 2.1-3 (page 4 of 5)
BWR FUEL ASSEMBLY CHARACTERISTICS (Note 1)

Fuel Assembly Array/Class	**10x10A**	**10x10B**	**10x10C**	**10x10D**	**10x10E**
Clad Material (Note 2)	Zr	Zr	Zr	SS	SS
Design Initial U (kg/assy.) (Note 3)	≤ 188	≤ 188	≤ 188	≤ 125	≤ 125
Maximum PLANAR-AVERAGE INITIAL ENRICHMENT (wt.% ^{235}U) (Note 14)	≤ 4.2	≤ 4.2	≤ 4.2	≤ 4.0	≤ 4.0
Initial Maximum Rod Enrichment (wt.% ^{235}U)	≤ 5.0	≤ 5.0	≤ 5.0	≤ 5.0	≤ 5.0
No. of Fuel Rod Locations	92/78 (Note 8)	91/83 (Note 9)	96	100	96
Fuel Rod Clad O.D. (in.)	≥ 0.4040	≥ 0.3957	≥ 0.3780	≥ 0.3960	≥ 0.3940
Fuel Rod Clad I.D. (in.)	≤ 0.3520	≤ 0.3480	≤ 0.3294	≤ 0.3560	≤ 0.3500
Fuel Pellet Dia. (in.)	≤ 0.3455	≤ 0.3420	≤ 0.3224	≤ 0.3500	≤ 0.3430
Fuel Rod Pitch (in.)	≤ 0.510	≤ 0.510	≤ 0.488	≤ 0.565	≤ 0.557
Design Active Fuel Length (in.)	≤ 150	≤ 150	≤ 150	≤ 83	≤ 83
No. of Water Rods (Note 11)	2	1 (Note 6)	5 (Note 10)	0	4
Water Rod Thickness (in.)	≥ 0.0300	> 0.00	≥ 0.031	N/A	≥ 0.022
Channel Thickness (in.)	≤ 0.120	≤ 0.120	≤ 0.055	≤ 0.080	≤ 0.080

Table 2.1-3 (page 5 of 5)
BWR FUEL ASSEMBLY CHARACTERISTICS

Notes:

1. All dimensions are design nominal values. Maximum and minimum dimensions are specified to bound variations in design nominal values among fuel assemblies within a given array/class.

2. Zr designates cladding material made of zirconium or zirconium alloys.

3. Design initial uranium weight is the nominal uranium weight specified for each assembly by the fuel manufacturer or reactor user. For each BWR fuel assembly, the total uranium weight limit specified in this table may be increased up to 1.5 percent for comparison with users' fuel records to account for manufacturer tolerances.

4. $\leq$ 0.635 wt. % ^{235}U and $\leq$ 1.578 wt. % total fissile plutonium (^{239}Pu and ^{241}Pu), (wt. % of total fuel weight, i.e., UO_2 plus PuO_2).

5. This assembly class contains 74 total rods; 66 full length rods and 8 partial length rods.

6. Square, replacing nine fuel rods.

7. Variable.

8. This assembly contains 92 total fuel rods; 78 full length rods and 14 partial length rods.

9. This assembly class contains 91 total fuel rods; 83 full length rods and 8 partial length rods.

10. One diamond-shaped water rod replacing the four center fuel rods and four rectangular water rods dividing the assembly into four quadrants.

11. These rods may also be sealed at both ends and contain Zr material in lieu of water.

12. This assembly is known as "QUAD+." It has four rectangular water cross segments dividing the assembly into four quadrants.

13. For the SPC 9x9-5 fuel assembly, each fuel rod must meet either the 9x9E or the 9x9F set of limits for clad O.D., clad I.D., and pellet diameter.

14. For those MPCs loaded with both INTACT FUEL ASSEMBLIES and DAMAGED FUEL ASSEMBLIES or FUEL DEBRIS, the maximum PLANAR AVERAGE INITIAL ENRICHMENT for the INTACT FUEL ASSEMBLIES is limited to 3.7 wt.% ^{235}U, as applicable.

Table 2.1-4

FUEL ASSEMBLY COOLING AND MAXIMUM AVERAGE BURNUP
(UNIFORM FUEL LOADING)

Post-irradiation Cooling Time (years)	MPC-24 PWR Assembly Burnup (INTACT FUEL ASSEMBLIES) (MWD/MTU)	MPC-24E/24EF PWR Assembly Burnup (INTACT FUEL ASSEMBLIES) (MWD/MTU)	MPC-24E/24EF PWR Assembly Burnup (DAMAGED FUEL ASSEMBLIES AND FUEL DEBRIS) (MWD/MTU)	MPC-32 PWR Assembly Burnup (INTACT FUEL ASSEMBLIES (MWD/MTU)	MPC-68/68FF BWR Assembly Burnup (INTACT FUEL ASSEMBLIES) (MWD/MTU)	MPC-68/68FF BWR Assembly Burnup (DAMAGED FUEL ASSEMBLIES AND FUEL DEBRIS) (MWD/MTU)
≥ 5	40,600	41,100	39,200	32,200	38,300	36,700
≥ 6	45,000	45,000	43,700	36,500	41,600	39,900
≥ 7	45,900	46,300	44,500	37,500	42,300	40,700
≥ 8	48,300	48,900	46,900	39,900	44,800	42,900
≥ 9	50,300	50,700	48,700	41,500	46,600	44,700
≥ 10	51,600	52,100	50,100	42,900	48,000	46,100
≥ 11	53,100	53,700	51,500	44,100	49,600	47,200
≥ 12	54,500	55,100	52,600	45,000	50,800	48,500
≥ 13	55,600	56,100	53,800	45,700	51,800	49,800
≥ 14	56,500	57,100	54,900	46,500	52,700	50,700
≥ 15	57,400	58,000	55,800	47,200	53,900	51,500

Notes:
1. Linear interpolation between points is permitted.
2. Burnup for fuel assemblies with cladding made of materials other than Zircaloy-2 or Zircaloy-4 is limited to 45,000 MWD/MTU or the value in this table, whichever is less.

Table 2.1-5

FUEL ASSEMBLY COOLING AND MAXIMUM DECAY HEAT
(UNIFORM FUEL LOADING)

Post-irradiation Cooling Time (years)	MPC-24 PWR Assembly Decay Heat (INTACT FUEL ASSEMBLIES) (Watts)	MPC-24E/24EF PWR Assembly Decay Heat (INTACT FUEL ASSEMBLIES) (Watts)	MPC-24E/24EF PWR Assembly Decay Heat (DAMAGED FUEL ASSEMBLIES AND FUEL DEBRIS) (Watts)	MPC-32 PWR Assembly Decay Heat (INTACT FUEL ASSEMBLIES (Watts)	MPC-68/68FF BWR Assembly Decay Heat (INTACT FUEL ASSEMBLIES) (Watts)	MPC-68/68FF BWR Assembly Decay Heat (DAMAGED FUEL ASSEMBLIES AND FUEL DEBRIS) (Watts)
≥ 5	1157	1173	1115	898	414	393
≥ 6	1123	1138	1081	873	394	374
≥ 7	1030	1043	991	805	363	345
≥ 8	1020	1033	981	800	360	342
≥ 9	1010	1023	972	794	358	340
≥ 10	1000	1012	962	789	355	337
≥ 11	996	1008	958	785	353	336
≥ 12	992	1004	954	782	352	334
≥ 13	987	999	949	773	350	332
≥ 14	983	995	945	769	348	331
≥ 15	979	991	941	766	347	329

Notes:
1. Linear interpolation between points is permitted.
2. Includes all sources of heat (i.e., fuel and NON-FUEL HARDWARE).

Table 2.1-6 (page 1 of 2)

FUEL ASSEMBLY COOLING AND MAXIMUM AVERAGE BURNUP
(REGIONALIZED FUEL LOADING)

Post-irradiation Cooling Time (years)	MPC-24 PWR Assembly Burnup for Region 1 (MWD/MTU)	MPC-24 PWR Assembly Burnup for Region 2 (MWD/MTU)	MPC-24E/24EF PWR Assembly Burnup for Region 1 (MWD/MTU)	MPC-24E/24EF PWR Assembly Burnup for Region 2 (MWD/MTU)
≥ 5	49,800	32,200	51,600	32,200
≥ 6	56,100	37,400	58,400	37,400
≥ 7	56,400	41,100	58,500	41,100
≥ 8	58,800	43,800	60,900	43,800
≥ 9	60,400	45,800	62,300	45,800
≥ 10	61,200	47,500	63,300	47,500
≥ 11	62,400	49,000	64,900	49,000
≥ 12	63,700	50,400	65,900	50,400
≥ 13	64,800	51,500	66,800	51,500
≥ 14	65,500	52,500	67,500	52,500
≥ 15	66,200	53,700	68,200	53,700
≥ 16	-	55,000	-	55,000
≥ 17	-	55,900	-	55,900
≥ 18	-	56,800	-	56,800
≥ 19	-	57,800	-	57,800
≥ 20	-	58,800	-	58,800

Notes:
1. Linear interpolation between points is permitted.
2. These limits apply to INTACT FUEL ASSEMBLIES, DAMAGED FUEL ASSEMBLIES, and FUEL DEBRIS.
3. Burnup for fuel assemblies with cladding made of materials other than Zircaloy-2 or Zircaloy-4 is limited to 45,000 MWD/MTU or the value in this table, whichever is less.

Table 2.1-6 (page 2 of 2)

FUEL ASSEMBLY COOLING AND MAXIMUM AVERAGE BURNUP
(REGIONALIZED FUEL LOADING)

Post-irradiation Cooling Time (years)	MPC-32 PWR Assembly Burnup for Region 1 (MWD/MTU)	MPC-32 PWR Assembly Burnup for Region 2 (MWD/MTU)	MPC-68/68FF BWR Assembly Burnup for Region 1 (MWD/MTU)	MPC-68/68FF BWR Assembly Burnup for Region 2 (MWD/MTU)
≥ 5	39,800	22,100	45,100	26,200
≥ 6	43,400	26,200	47,400	30,500
≥ 7	44,500	29,100	47,400	33,600
≥ 8	46,700	31,200	50,400	35,900
≥ 9	48,400	32,700	52,100	37,600
≥ 10	49,600	34,100	53,900	39,000
≥ 11	50,900	35,200	55,500	40,200
≥ 12	51,900	36,200	56,500	41,200
≥ 13	52,900	37,000	57,500	42,300
≥ 14	53,800	37,800	58,800	43,300
≥ 15	54,700	38,600	59,900	44,200
≥ 16	-	39,400	-	45,000
≥ 17	-	40,200	-	45,900
≥ 18	-	40,800	-	46,700
≥ 19	-	41,500	-	47,500
≥ 20	-	42,200	-	48,500

Notes:
1. Linear interpolation between points is permitted.
2. These limits apply to INTACT FUEL ASSEMBLIES, DAMAGED FUEL ASSEMBLIES, and FUEL DEBRIS.
3. Burnup for fuel assemblies with cladding made of materials other than Zircaloy-2 or Zircaloy-4 is limited to 45,000 MWD/MTU or the value in this table, whichever is less.

Table 2.1-7 (page 1 of 2)

FUEL ASSEMBLY COOLING AND MAXIMUM DECAY HEAT
(REGIONALIZED FUEL LOADING)

Post-irradiation Cooling Time (years)	MPC-24 PWR Assembly Decay Heat for Region 1 (Watts)	MPC-24 PWR Assembly Decay Heat for Region 2 (Watts)	MPC-24E/24EF PWR Assembly Decay Heat for Region 1 (Watts)	MPC-24E/24EF PWR Assembly Decay Heat for Region 2 (Watts)
≥ 5	1470	900	1540	900
≥ 6	1470	900	1540	900
≥ 7	1335	900	1395	900
≥ 8	1,301	900	1360	900
≥ 9	1268	900	1325	900
≥ 10	1235	900	1290	900
≥ 11	1221	900	1275	900
≥ 12	1207	900	1260	900
≥ 13	1193	900	1245	900
≥ 14	1179	900	1230	900
≥ 15	1165	900	1215	900
≥ 16	-	900	-	900
≥ 17	-	900	-	900
≥ 18	-	900	-	900
≥ 19	-	900	-	900
≥ 20	-	900	-	900

Notes: 1. Linear interpolation between points is permitted.

2. Includes all sources of decay heat (i.e., fuel and NON-FUEL HARDWARE).

4. These limits apply to INTACT FUEL ASSEMBLIES, DAMAGED FUEL ASSEMBLIES, and FUEL DEBRIS.

Table 2.1-7 (page 2 of 2)

FUEL ASSEMBLY COOLING AND MAXIMUM DECAY HEAT
(REGIONALIZED FUEL LOADING)

Post-irradiation Cooling Time (years)	MPC-32 PWR Assembly Decay Heat for Region 1 (Watts)	MPC-32 PWR Assembly Decay Heat for Region 2 (Watts)	MPC-68/68FF BWR Assembly Decay Heat for Region 1 (Watts)	MPC-68/68FF BWR Assembly Decay Heat for Region 2 (Watts)
≥ 5	1131	600	500	275
≥ 6	1072	600	468	275
≥ 7	993	600	418	275
≥ 8	978	600	414	275
≥ 9	964	600	410	275
≥ 10	950	600	405	275
≥ 11	943	600	403	275
≥ 12	937	600	400	275
≥ 13	931	600	397	275
≥ 14	924	600	394	275
≥ 15	918	600	391	275
≥ 16	-	600	-	275
≥ 17	-	600	-	275
≥ 18	-	600	-	275
≥ 19	-	600	-	275
≥ 20	-	600	-	275

Notes:
1. Linear interpolation between points is permitted.
2. Includes all sources of decay heat (i.e., fuel and NON-FUEL HARDWARE).
3. These limits apply to INTACT FUEL ASSEMBLIES, DAMAGED FUEL ASSEMBLIES, and FUEL DEBRIS.

Table 2.1-8
NON-FUEL HARDWARE COOLING AND AVERAGE BURNUP

Post-irradiation Cooling Time (years)	**NEUTRON POISON INSERTS** (Note 3) **BURNUP (MWD/MTU)**	**GUIDE TUBE HARDWARE** (Note 4) **BURNUP (MWD/MTU)**	**CONTROL COMPONENT** (Note 5) **BURNUP (MWD/MTU)**	**APSR BURNUP (MWD/MTU)**
≥ 3	≤ 20,000	NA (Note 6)	NA	NA
≥ 4	≤ 25,000	≤ 20,000	NA	NA
≥ 5	≤ 30,000	≤ 25,000	≤ 630,000	≤ 45,000
≥ 6	≤ 40,000	≤ 30,000	-	≤ 54,500
≥ 7	≤ 45,000	≤ 40,000	-	≤ 68,000
≥ 8	≤ 50,000	≤ 45,000	-	≤ 83,000
≥ 9	≤ 60,000	≤ 50,000	-	≤ 111,000
≥ 10	-	≤ 60,000	-	≤ 180,000
≥ 11	-	≤ 75,000	-	≤ 630,000
≥ 12	-	≤ 90,000	-	-
≥ 13	-	≤ 180,000	-	-
≥ 14	-	≤ 630,000	-	-

Notes:
1. Linear interpolation between points is permitted, except that TPD and APSR burnups > 180,000 MWD/MTU and ≤ 630,000 MWD/MTU must be cooled ≥ 14 years and ≥ 11 years, respectively.
2. Applicable to uniform loading and regionalized loading.
3. Includes Burnable Poison Rod Assemblies (BPRAs) and Wet Annular Burnable Absorbers (WABAs).
4. Includes Thimble Plug Devices (TPDs), water displacement guide tube plugs, and orifice rod assemblies.
5. Includes Control Rod Assemblies (CRAs), Control Element Assemblies (CEAs), and Rod Cluster Control Assemblies (RCCAs).
6. NA means not authorized for loading.

3.0 DESIGN FEATURES

3.1 Site

3.1.1 Site Location

The HI-STORM 100 Cask System is authorized for general use by 10 CFR Part 50 license holders at various site locations under the provisions of 10 CFR 72, Subpart K.

3.2 Design Features Important for Criticality Control

3.2.1 MPC-24

1. Flux trap size: $\geq$ 1.09 in.
2. ^{10}B loading in the Boral neutron absorbers: $\geq$ 0.0267 g/cm^2

3.2.2 MPC-68 and MPC-68FF

1. Fuel cell pitch: $\geq$ 6.43 in.
2. ^{10}B loading in the Boral neutron absorbers: $\geq$ 0.0372 g/cm^2

3.2.3 MPC-68F

1. Fuel cell pitch: $\geq$ 6.43 in.
2. ^{10}B loading in the Boral neutron absorbers: $\geq$ 0.01 g/cm^2

3.2.4 MPC-24E and MPC-24EF

1. Flux trap size:
   i. Cells 3, 6, 19, and 22: $\geq$ 0.776 inch
   ii. All Other Cells: $\geq$ 1.076 inches
2. ^{10}B loading in the Boral neutron absorbers: $\geq$ 0.0372 g/cm^2

3.2.5 MPC-32

1. Fuel cell pitch: $\geq$ 9.158 inches
2. ^{10}B loading in the Boral neutron absorbers: $\geq$ 0.0372 g/cm^2

3.2.6 Fuel spacers shall be sized to ensure that the active fuel region of intact fuel assemblies remains within the Boral neutron poison region of the MPC basket with water in the MPC.

DESIGN FEATURES

3.3 Codes and Standards

The American Society of Mechanical Engineers Boiler and Pressure Vessel Code (ASME Code), 1995 Edition with Addenda through 1997, is the governing Code for the HI-STORM 100 System, as clarified in Specification 3.3.1 below. American Concrete Institute (ACI) 349-85 is the governing Code for plain concrete as clarified in Appendix 1.D of the Final Safety Analysis Report for the HI-STORM 100 Cask System.

3.3.1 Exceptions to Codes, Standards, and Criteria

Table 3-1 lists approved exceptions to the ASME Code for the design of the HI-STORM 100 Cask System.

3.3.2 Construction/Fabrication Exceptions to Codes, Standards, and Criteria

Proposed alternatives to the ASME Code, Section III, 1995 Edition with Addenda through 1997 including exceptions allowed by Specification 3.3.1 may be used when authorized by the Director of the Office of Nuclear Material Safety and Safeguards or designee. The request for such alternative should demonstrate that:

1. The proposed alternatives would provide an acceptable level of quality and safety, or

2. Compliance with the specified requirements of the ASME Code, Section III, 1995 Edition with Addenda through 1997, would result in hardship or unusual difficulty without a compensating increase in the level of quality and safety.

Requests for exceptions shall be submitted in accordance with 10 CFR 72.4

(continued)

DESIGN FEATURES

Table 3-1 (page 1 of 5)
LIST OF ASME CODE EXCEPTIONS FOR HI-STORM 100 CASK SYSTEM

Component	Reference ASME Code Section/Article	Code Requirement	Exception, Justification & Compensatory Measures
MPC	NB-1100	Statement of requirements for Code stamping of components.	MPC enclosure vessel is designed and will be fabricated in accordance with ASME Code, Section III, Subsection NB to the maximum practical extent, but Code stamping is not required.
MPC	NB-2000	Requires materials to be supplied by ASME-approved material supplier.	Materials will be supplied by Holtec-approved suppliers with Certified Material Test Reports (CMTRs) in accordance with NB-2000 requirements.
MPC Lid and Closure Ring Welds	NB-4243	Full penetration welds required for Category C Joints (flat head to main shell per NB-3352.3).	MPC lid and closure ring are not full penetration welds. They are welded independently to provide a redundant seal. Additionally, a weld efficiency factor of 0.45 has been applied to the analyses of these welds.
MPC Lid to Shell Weld	NB-5230	Radiographic (RT) or ultrasonic (UT) examination required	Only UT or multi-layer liquid penetrant (PT) examination is permitted. If PT alone is used, at a minimum, it will include the root and final weld layers and each approximately 3/8 inch of weld depth.
MPC Closure Ring, Vent and Drain Cover Plate Welds	NB-5230	Radiographic (RT) or ultrasonic (UT) examination required	Root (if more than one weld pass is required) and final liquid penetrant examination to be performed in accordance with NB-5245. The MPC vent and drain cover plate welds are leak tested. The closure ring provides independent redundant closure for vent and drain cover plates.

(continued)

3.0 DESIGN FEATURES

Table 3-1 (page 2 of 5)

LIST OF ASME CODE EXCEPTIONS FOR HI-STORM 100 CASK SYSTEM

Component	Reference ASME Code Section/Article	Code Requirement	Exception, Justification & Compensatory Measures
MPC Enclosure Vessel and Lid	NB-6111	All completed pressure retaining systems shall be pressure tested.	The MPC enclosure vessel is seal welded in the field following fuel assembly loading. The MPC enclosure vessel shall then be hydrostatically tested as defined in Chapter 9. Accessibility for leakage inspections preclude a Code compliant hydrostatic test. All MPC enclosure vessel welds (except closure ring and vent/drain cover plate) are inspected by volumetric examination, except the MPC lid-to-shell weld shall be verified by volumetric or multi-layer PT examination. If PT alone is used, at a minimum, it must include the root and final layers and each approximately 3/8 inch of weld depth. For either UT or PT, the maximum undetectable flaw size must be demonstrated to be less than the critical flaw size. The critical flaw size must be determined in accordance with ASME Section XI methods. The critical flaw size shall not cause the primary stress limits of NB-3000 to be exceeded.

(continued)

DESIGN FEATURES

Table 3-1 (page 3 of 5)

LIST OF ASME CODE EXCEPTIONS FOR HI-STORM 100 CASK SYSTEM

Component	Reference ASME Code Section/Article	Code Requirement	Exception, Justification & Compensatory Measures
MPC Enclosure Vessel and Lid (continued)	NB-6111	All completed pressure retaining systems shall be pressure tested.	The inspection process, including findings (indications), shall be made a permanent part of the user's records by video, photographic, or other means which provide an equivalent retrievable record of weld integrity. The video or photographic records should be taken during the final interpretation period described in ASME Section V, Article 6, T-676. The vent/drain cover plate weld is confirmed by leakage testing and liquid penetrant examination and the closure ring weld is confirmed by liquid penetrant examination. The inspection of the weld must be performed by qualified personnel and shall meet the acceptance requirements of ASME Code Section III, NB-5350 for PT or NB-5332 for UT.

(continued)

DESIGN FEATURES

Table 3-1 (page 4 of 5)

LIST OF ASME CODE EXCEPTIONS FOR HI-STORM 100 CASK SYSTEM

Component	Reference ASME Code Section/Article	Code Requirement	Exception, Justification & Compensatory Measures
MPC Enclosure Vessel	NB-7000	Vessels are required to have overpressure protection	No overpressure protection is provided. The function of the MPC enclosure vessel is to contain the radioactive contents under normal, off-normal, and accident conditions. The MPC vessel is designed to withstand maximum internal pressure considering 100% fuel rod failure and maximum accident temperatures.
MPC Enclosure Vessel	NB-8000	States requirements for nameplates, stamping and reports per NCA-8000.	The HI-STORM100 System is to be marked and identified in accordance with 10CFR71 and 10CFR72 requirements. Code stamping is not required. QA data package to be in accordance with Holtec approved QA program.
MPC Basket Assembly	NG-2000	Requires materials to be supplied by ASME-approved material supplier.	Materials will be supplied by Holtec-approved supplier with CMTRs in accordance with NG-2000 requirements.
MPC Basket Assembly	NG-8000	States requirements for nameplates, stamping and reports per NCA-8000.	The HI-STORM100 System is to be marked and identified in accordance with 10CFR71 and 10CFR72 requirements. Code stamping is not required. The MPC basket data package to be in accordance with Holtec approved QA program.

(continued)

DESIGN FEATURES

Table 3-1 (page 5 of 5)

LIST OF ASME CODE EXCEPTIONS FOR HI-STORM 100 CASK SYSTEM

Component	Reference ASME Code Section/Article	Code Requirement	Exception, Justification & Compensatory Measures
OVERPACK Steel Structure	NF-2000	Requires materials to be supplied by ASME-approved material supplier.	Materials will be supplied by Holtec-approved supplier with CMTRs in accordance with NF-2000 requirements.
TRANSFER CASK Steel Structure	NF-2000	Requires materials to be supplied by ASME-approved material supplier.	Materials will be supplied by Holtec-approved supplier with CMTRs in accordance with NF-2000 requirements.
OVERPACK Baseplate and Lid Top Plate	NF-4441	Requires special examinations or requirements for welds where a primary member of thickness 1 inch or greater is loaded to transmit loads in the through thickness direction.	The large margins of safety in these welds under loads experienced during lifting operations or accident conditions are quite large. The OVERPACK baseplate welds to the inner shell, pedestal shell, and radial plates are only loaded during lifting conditions and have a minimum safety factor of > 12 during lifting. The top lid plate to lid shell weld has a safety factor > 6 under a deceleration of 45 g's.
OVERPACK Steel Structure	NF-3256	Provides requirements for welded joints.	Welds for which no structural credit is taken are identified as "Non-NF" welds in the design drawings by an "*". These non-structural welds are specified in accordance with the pre-qualified welds of AWS D1.1. These welds shall be made by welders and weld procedures qualified in accordance with AWS D1.1 or ASME Section IX.

(continued)

DESIGN FEATURES (continued)

3.4 Site-Specific Parameters and Analyses

Site-specific parameters and analyses that will require verification by the system user are, as a minimum, as follows:

1. The temperature of 80° F is the maximum average yearly temperature.

2. The allowed temperature extremes, averaged over a 3-day period, shall be greater than -40° F and less than 125° F.

3. a. For free-standing casks, the resultant horizontal acceleration (vectorial sum of two horizontal Zero Period Accelerations (ZPAs) at a three-dimensional seismic site), G_H, and vertical ZPA, G_V, expressed as fractions of 'g', shall satisfy the following inequality:

$$G_H + : G_V \leq :$$

where : is the Coulomb friction coefficient for the HI-STORM 100/ISFSI pad interface. Unless demonstrated by appropriate testing that a higher value of : is appropriate for a specific ISFSI, the value of : used shall be 0.53. Representative values of G_H and G_V combinations for : = 0.53 are provided in Table 3-2.

Table 3-2

Representative DBE Acceleration Values to Prevent HI-STORM 100 Sliding (: = 0.53)

Equivalent Vectorial Sum of Two Horizontal ZPA's (G_H in g's)	**Corresponding Vertical ZPA (G_V in g's)**
0.445	0.160
0.424	0.200
0.397	0.250

(continued)

DESIGN FEATURES

3.4 Site-Specific Parameters and Analyses (continued)

b. For those ISFSI sites with design basis seismic acceleration values higher than those allowed for free-standing casks, the HI-STORM 100 System shall be anchored to the ISFSI pad. The site seismic characteristics and the anchorage system shall meet the following requirements:

i. The site acceleration response spectra at the top of the ISFSI pad shall have ZPAs that meet the following inequalities:

$$G_H \leq 2.12$$

AND

$$G_V \leq 1.5$$

Where:

G_H is the vectorial sum of the two horizontal ZPAs at a three-dimensional seismic site (or the horizontal ZPA at a two-dimensional site) and G_V is the vertical ZPA.

ii. Each HI-STORM 100 dry storage cask shall be anchored with twenty-eight (28), 2-inch diameter studs and compatible nuts of material suitable for the expected ISFSI environment. The studs shall meet the following requirements:

Yield Strength at Ambient Temperature: $\geq$ 80 ksi

Ultimate Strength at Ambient Temperature: $\geq$ 125 ksi

Initial Tensile Pre-Stress: $\geq$ 55 ksi AND $\leq$ 65 ksi

NOTE: The above anchorage specifications are required for the seismic spectra defined in item 3.4.3.b.i. Users may use fewer studs or those of different diameter to account for site-specific seismic spectra less severe than those specified above. The embedment design shall comply with Appendix B of ACI-349-97. A later edition of this Code may be used, provided a written reconciliation is performed.

iii. Embedment Concrete Compressive Strength: $\geq$ 4,000 psi at 28 days

(continued)

DESIGN FEATURES

3.4 Site-Specific Parameters and Analyses (continued)

4. The analyzed flood condition of 15 fps water velocity and a height of 125 feet of water (full submergence of the loaded cask) are not exceeded.

5. The potential for fire and explosion shall be addressed, based on site-specific considerations. This includes the condition that the on-site transporter fuel tank will contain no more than 50 gallons of diesel fuel while handling a loaded OVERPACK or TRANSFER CASK.

6. a. For free-standing casks, the ISFSI pad shall be verified by analysis to limit cask deceleration during design basis drop and non-mechanistic tip-over events to ≤ 45 g's at the top of the MPC fuel basket. Analyses shall be performed using methodologies consistent with those described in the HI-STORM 100 FSAR. A lift height above the ISFSI pad is not required to be established if the cask is lifted with a device designed in accordance with ANSI N14.6 and having redundant drop protection features.

   b. For anchored casks, the ISFSI pad shall be designed to meet the embedment requirements of the anchorage design. A cask tip-over event for an anchored cask is not credible. The ISFSI pad shall be verified by analysis to limit cask deceleration during a design basis drop event to ≤ 45 g's at the top of the MPC fuel basket, except as provided for in this paragraph below. Analyses shall be performed using methodologies consistent with those described in the HI-STORM 100 FSAR. A lift height above the ISFSI pad is not required to be established if the cask is lifted with a device design in accordance with ANSI N14.6 and having redundant drop protection features.

(continued)

DESIGN FEATURES

3.4 Site-Specific Parameters and Analyses (continued)

7. In cases where engineered features (i.e., berms and shield walls) are used to ensure that the requirements of 10CFR72.104(a) are met, such features are to be considered important to safety and must be evaluated to determine the applicable Quality Assurance Category.

8. LOADING OPERATIONS, TRANSPORT OPERATIONS, and UNLOADING OPERATIONS shall only be conducted with working area ambient temperatures $\geq 0^{o}$ F.

9. For those users whose site-specific design basis includes an event or events (e.g., flood) that result in the blockage of any OVERPACK inlet or outlet air ducts for an extended period of time (i.e, longer than the total Completion Time of LCO 3.1.2), an analysis or evaluation may be performed to demonstrate adequate heat removal is available for the duration of the event. Adequate heat removal is defined as fuel cladding temperatures remaining below the short term temperature limit. If the analysis or evaluation is not performed, or if fuel cladding temperature limits are unable to be demonstrated by analysis or evaluation to remain below the short term temperature limit for the duration of the event, provisions shall be established to provide alternate means of cooling to accomplish this objective.

(continued)

DESIGN FEATURES

3.5 Cask Transfer Facility (CTF)

3.5.1 TRANSFER CASK and MPC Lifters

Lifting of a loaded TRANSFER CASK and MPC outside of structures governed by 10 CFR Part 50 shall be performed with a CTF that is designed, operated, fabricated, tested, inspected, and maintained in accordance with the guidelines of NUREG-0612, "Control of Heavy Loads at Nuclear Power Plants" and the below clarifications. The CTF Structure requirements below do not apply to heavy loads bounded by the regulations of 10 CFR Part 50.

3.5.2 CTF Structure Requirements

3.5.2.1 Cask Transfer Station and Stationary Lifting Devices

1. The metal weldment structure of the CTF structure shall be designed to comply with the stress limits of ASME Section III, Subsection NF, Class 3 for linear structures. The applicable loads, load combinations, and associated service condition definitions are provided in Table 3-3. All compression loaded members shall satisfy the buckling criteria of ASME Section III, Subsection NF.

2. If a portion of the CTF structure is constructed of reinforced concrete, then the factored load combinations set forth in ACI-318 (89) for the loads defined in Table 3-3 shall apply.

3. The TRANSFER CASK and MPC lifting device used with the CTF shall be designed, fabricated, operated, tested, inspected and maintained in accordance with NUREG-0612, Section 5.1.

4. The CTF shall be designed, constructed, and evaluated to ensure that if the MPC is dropped during inter-cask transfer operations, its confinement boundary would not be breached. This requirements applies to CTFs with either stationary or mobile lifting devices.

(continued)

DESIGN FEATURES

3.5.2.2 Mobile Lift Devices

If a mobile lifting device is used as the lifting device, in lieu of a stationary lifting device, is shall meet the guidelines of NUREG-0612, Section 5.1, with the following clarifications:

1. Mobile lifting devices shall have a minimum safety factor of two over the allowable load table for the lifting device in accordance with the guidance of NUREG-0612, Section 5.1.6(1)(a) and shall be capable of stopping and holding the load during a Design Basis Earthquake (DBE) event.

2. Mobile lifting devices shall conform to meet the requirements of ANSI B30.5, "Mobile and Locomotive Cranes," in lieu of the requirements of ANSI B30.2, "Overhead and Gantry Cranes."

3. Mobile cranes are not required to meet the requirements of NUREG-0612, Section 5.1.6(2) for new cranes.

4. Horizontal movements of the TRANSFER CASK and MPC using a mobile crane are prohibited. |

(continued)

DESIGN FEATURES

Table 3-3

Load Combinations and Service Condition Definitions for the CTF Structure (Note 1)

Load Combination	ASME III Service Condition for Definition of Allowable Stress	Comment
D* D + S	Level A	All primary load bearing members must satisfy Level A stress limits
D + M + W' (Note 2) D + F D + E D + Y	Level D	Factor of safety against overturning shall be $\geq$ 1.1

D = Dead load
D* = Apparent dead load
S = Snow and ice load for the CTF site
M = Tornado missile load for the CTF site
W' = Tornado wind load for the CTF site
F = Flood load for the CTF site
E = Seismic load for the CTF site
Y = Tsunami load for the CTF site

Notes:

1. The reinforced concrete portion of the CTF structure shall also meet the factored combinations of loads set forth in ACI-318(89).

2. Tornado missile load may be reduced or eliminated based on a PRA for the CTF site.

DESIGN FEATURES

3.6 Forced Helium Dehydration System

3.6.1 System Description

Use of the Forced Helium Dehydration (FHD) system, (a closed-loop system) is an alternative to vacuum drying the MPC for moderate burnup fuel (≤ 45,000 MWD/MTU) and mandatory for drying MPCs containing one or more high burnup fuel assemblies. The FHD system shall be designed for normal operation (i.e., excluding startup and shutdown ramps) in accordance with the criteria in Section 3.6.2.

3.6.2 Design Criteria

3.6.2.1 The temperature of the helium gas in the MPC shall be at least 15°F higher than the saturation temperature at coincident pressure.

3.6.2.2 The pressure in the MPC cavity space shall be ≤ 60.3 psig (75 psia).

3.6.2.3 The hourly recirculation rate of helium shall be ≥ 10 times the nominal helium mass backfilled into the MPC for fuel storage operations.

3.6.2.4 The partial pressure of the water vapor in the MPC cavity will not exceed 3 torr if the helium temperature at the demoisturer outlet is ≤ 21°F for a period of 30 minutes.

3.6.2.5 The condensing module shall be designed to de-vaporize the recirculating helium gas to a dew point ≤ 120°F.

3.6.2.6 The demoisturizing module shall be configured to be introduced into its helium conditioning function after the condensing module has been operated for the required length of time to assure that the bulk moisture vaporization in the MPC (defined as Phase 1 in FSAR Appendix 2.B) has been completed.

3.6.2.7 The helium circulator shall be sized to effect the minimum flow rate of circulation required by these design criteria.

3.6.2.8 The pre-heater module shall be engineered to ensure that the temperature of the helium gas in the MPC meets these design criteria.

(continued)

DESIGN FEATURES

3.6 Forced Helium Dehydration System (continued)

3.6.3 Fuel Cladding Temperature

A steady-state thermal analysis of the MPC under the forced helium flow scenario shall be performed using the methodology described in HI-STORM 100 FSAR Subsections 4.4.1.1.1 through 4.4.1.1.4, with due recognition of the forced convection process during FHD system operation. This analysis shall demonstrate that the peak temperature of the fuel cladding under the most adverse condition of FHD system operation, is below the peak cladding temperature limit for normal conditions of storage for the applicable fuel type (PWR or BWR) and cooling time at the start of dry storage.