NUCLEAR
ASSURANCE
CORPORATION

DOE/ET/34014-10
NAC C-8327

Extended Fuel Burnup Demonstration Program

Nuclear Assurance Corporation

Final Report

September 1983

DOE/ET/34014-10
NAC C-8327
UC-78

Extended Fuel Burnup Demonstration Program

Nuclear Assurance Corporation

Final Report

September 1983

James M. Viebrock
Program Manager

Richard A. Schreiber
Principal Investigator

Prepared for

United States Department of Energy
and
Virginia Electric Power Company

by

NUCLEAR ASSURANCE CORPORATION

5720 Peachtree Parkway
Norcross, Georgia
Telephone: (404) 447-1144
Telex: 6827020

Weinbergstrasse 9
8001 Zurich, Swizterland
Telephone: 1-470844
Telex: 57275

©NAC 1983

ABSTRACT

Four cask designs were evaluated to determine the transportability of extended burnup fuels. These were the NAC-1 and NLI-1/2, both legal weight truck casks, and the NLI-10/24 and NAC-3K, both multi-element rail casks. Design modifications were also evaluated where increases in the number of assemblies transportable would be obtained or where shorter cool times for the assemblies could be used. Burnup credit was considered as a possible design modification.

The results of the evaluations showed that with minor design modifications, all the designs could transport target burnups of 55,000 MWD/MTU PWR fuels and 50,000 MWD/MTU BWR fuels in reasonable cool times except the NAC-3K.

DISCLAIMER

This report was prepared as an account of work sponsored by the United States government. Neither the United States nor the United States Department of Energy, nor any of their employees, makes any warranty, expressed or implied, or assumes any legal liability or responsibility for the accuracy, completeness, or usefulness of any information, apparatus, product, or process disclosed, or represents that its use would not infringe privately owned rights. Reference herein to any specific commercial product, process, or service by trade name, mark, manufacturer, or otherwise does not necessarily constitute or imply its endorsement, recommendation, or favoring by the United States government or any agency thereof. The views and opinions of authors expressed herein do not necessarily state or reflect those of the United States or any agency thereof.

Printed in the United States of America
Available from
National Technical Information Service
U. S. Department of Commerce
5285 Port Royal Road
Springfield, VA 22161

NTIS Price Codes
Printed copy: A09
Micofiche copy: A01

ACKNOWLEDGEMENT

During the performance of the work described in this report, we were privileged to draw upon the experience and expertise of several individuals and organizations outside of Nuclear Assurance Corporation for discussions and material reviews. We wish to express our appreciation to representatives of the United States Department of Energy, the Virginia Electric and Power Company, and Westinghouse Electric Corporation for valuable suggestions and criticisms made during project meetings, discussions, and reviews of the draft of this report. The following individuals made significant suggestions and contributions in the furtherance of the program effort: R. W. Chickering, H. D. Moss, P. M. Lang and L. W. Fox. A special note of gratitude is due to P. W. Hinson of NAC, who assisted in the final preparation of this document.

PROJECT PARTICIPANTS

Roger W. Carlson
F. Larry Danese
Andrew J. Frankel
Douglas H. Malin
Norman M. Meinert
Stephen M. Schutt
Richard A. Schreiber
Thomas J. Tilinski
James M. Viebrock
Allen H. Wells

TABLE OF CONTENTS

1.0 Introduction 1
1.1 Statement of Work 1
1.2 Summary of Evaluation Results 2
1.2.1 NAC-1 Cask 4
1.2.2 NLI-1/2 Cask 4
1.2.3 NLI-10/24 Cask 4
1.2.4 NAC-3K Cask 5
1.3 Summary of Design Recommendations 5
1.3.1 NAC-1 Cask 5
1.3.2 NLI-1/2 Cask 5
1.3.3 NLI-10/24 Cask 7
1.3.4 NAC-3K Cask 7

2.0 NAC-1 Cask Evaluation 8
2.1 Cask Description 8
2.1.1 Containment Boundary 10
2.1.2 Shielding 13
2.1.3 Heat Rejection 15
2.1.4 Impact Limiters 15
2.1.5 Transportable Contents 16
2.2 Physical/Dimensional Evaluation 16
2.3 Criticality Evaluation 18
2.3.1 Existing Analyses 18
2.3.2 New Analyses 18
2.3.3 Determination of Limits 18
2.4 Shielding Evaluation 20
2.4.1 Existing Analyses 20
2.4.2 Determination of Limits 20
2.5 Heat Rejection Evaluation 21
2.5.1 Existing Analyses 21
2.5.2 Determination of Limits 21
2.6 Fission Gas Handling Evaluation 21
2.6.1 Existing Analyses 21
2.6.2 New Analyses 23
2.7 Combined Results 24
2.8 Design Modification Recommendations 24
2.8.1 Design Options 24
2.8.2 Design Recommendations 27

3.0 NLI-1/2 Cask Evaluation 29
3.1 Cask Description 29
3.1.1 Containment Boundary 33
3.1.2 Shielding 36
3.1.3 Heat Rejection 38
3.1.4 Impact Limiters 38
3.1.5 Transportable Contents 38
3.2 Physical/Dimensional Evaluation 40
3.3 Criticality Evaluation 40
3.3.1 Existing Analyses 40
3.3.2 New Analyses 41
3.3.3 Determination of Limits 41
3.4 Shielding Evaluation 43

3.4.1 Existing Analyses....43
3.4.2 New Analyses....43
3.4.3 Determination of Limits....44
3.5 Heat Rejection Evaluation....44
3.5.1 Existing Analyses....44
3.5.2 Determination of Limits....46
3.6 Fission Gas Handling Evaluation....46
3.6.1 Existing Analyses....46
3.6.2 New Analyses....46
3.7 Combined Results....48
3.8 Design Modification Recommendations....48
3.8.1 Design Options....50
3.8.2 Design Recommendation....50

4.0 NLI-10/24 Cask Evaluation....52
4.1 Cask Description....52
4.1.1 Containment Boundary....56
4.1.2 Shielding....57
4.1.3 Heat Rejection....57
4.1.4 Impact Limiters....57
4.1.5 Transportable Contents....58
4.2 Physical/Dimensional Evaluation....58
4.3 Criticality Evaluation....60
4.3.1 Existing Analyses....60
4.3.2 New Analyses....60
4.3.3 Determination of Limits....60
4.4 Shielding Evaluation....64
4.4.1 Existing Analyses....64
4.4.2 New Analyses....64
4.4.3 Determination of Limits....64
4.5 Heat Rejection Evaluation....65
4.5.1 Existing Analyses....65
4.5.2 New Analyses....65
4.5.3 Determination of Limits....67
4.6 Fission Gas Handling Evaluation....67
4.6.1 Existing Analyses....67
4.6.2 New Analyses....69
4.7 Combined Results....69
4.8 Design Modification Recommendations....70
4.8.1 Design Options....70
4.8.2 Design Recommendation....70

5.0 NAC-3K Cask Evaluation....75
5.1 Cask Description....75
5.1.1 Containment Boundary....78
5.1.2 Shielding....78
5.1.3 Heat Rejection....79
5.1.4 Impact Limiters....79
5.1.5 Transportable Contents....80
5.2 Physical/Dimensional Evaluation....80
5.3 Criticality Evaluation....82
5.3.1 Existing Analyses....82
5.3.2 New Analyses....82
5.3.3 Determination of Limits....83

5.4 Shielding Evaluation....83
5.4.1 Existing Analyses....83
5.4.2 Determination of Limits....83
5.5 Heat Rejection Evaluation....83
5.5.1 Existing Analyses....83
5.5.2 New Analyses....86
5.5.3 Determination of Limits....87
5.6 Fission Gas Handling Evaluation....87
5.6.1 Existing Analyses....87
5.6.2 Determination of Limits....87
5.7 Combined Results....89
5.8 Design Modification Recommendations....89

6.0 Analysis Methodologies....93
6.1 Criticality Methodology....93
6.2 Shielding Methodology....94
6.2.1 Gamma Shielding....94
6.2.2 Neutron Shielding....94
6.3 Heat Rejection Methodology....95
6.4 Fission Gas Handling Methodology....96
6.4.1 Analysis Requirements....96
6.4.2 Determination of Analysis Conditions....97
6.4.3 Analysis Procedure....98

7.0 Extended Burnup Fuel Data....99
7.1 Physical Data....99
7.2 Source Term Data....100

8.0 References....173

LIST OF ILLUSTRATIONS

Page

Figure 2-1. NAC-1 Spent Fuel Shipping Cask....9
Figure 2-2. NAC-1 Cask Cross-Section, PWR Fuel....11
Figure 2-3. NAC-1 Cask Cross-Section, BWR Fuel....12
Figure 2-4. NAC-1 Cask Containment Boundary....14
Figure 3-1. NLI-1/2 Spent Fuel Shipping Cask....30
Figure 3-2. NLI-1/2 Cask Cross-Section, PWR Fuel....31
Figure 3-3. NLI-1/2 Cask Cross-Section, BWR Fuel....32
Figure 3-4. NLI-1/2 Cask Configuration "A", Schematic....35
Figure 3-5. NLI-1/2 Cask Configuration "B", Schematic....37
Figure 4-1. NLI-10/24 Spent Fuel Shipping Cask....53
Figure 4-2. NLI-10/24 Cask Cross Section, PWR Fuel....54
Figure 4-3. NLI-10/24 Cask Cross Section, BWR Fuel....55
Figure 4-4. NLI-10/24 PWR Partial Loading Pattern....61
Figure 4-5. NLI-10/24 BWR Partial Loading Pattern....62
Figure 4-6. NLI-10/24 Cask Cross Section, Nine Element PWR....72
Figure 5-1. NAC-3K Spent Fuel Shipping Cask....76
Figure 5-2. NAC-3K Cask Cross Section, PWR Fuel....77

LIST OF TABLES

		Page
Table 1-1.	Maximum Transportable Enrichments and Limiting Cool Times to Ship 55,000 MWD/MTU PWR or 50,000 MWD/MTU BWR fuels in Unmodified Casks	3
Table 1-2.	Maximum Transportable Enrichments and Limiting Cool Times to Ship 55,000 MWD/MTU PWR or 50,000 MWD/MTU BWR Fuels in Modified (Optimized) Casks	6
Table 2-1.	NAC-1 Fuel Assembly Characteristics	17
Table 2-2.	NAC-1 Assembly Envelopes	16
Table 2-3.	Maximum Enrichments Transportable in the NAC-1 Cask	19
Table 2-4.	Minimum Cool Times for Transportable Assemblies in the NAC-1 Due to Heat Rejection Limits	22
Table 2-5.	Minimum Cool Times Required for Transportable Assemblies in the NAC-1 Cask Due to Fission Gas Handling Limits	25
Table 2-6.	Combined Transportable Limits for Extended Burnup Fuels in the NAC-1 Cask	26
Table 2-7.	Combined Transportable Limits for Extended Burnup Fuel in a Modified NAC-1 Cask	28
Table 3-1.	Licensed Fuel Parameters for the NLI-1/2 Cask	39
Table 3-2.	NLI-1/2 Assembly Envelope	40
Table 3-3.	Maximum Enrichments Transportable in the NLI-1/2 Cask	42
Table 3-4.	Minimum Cool Times for Transportable Assemblies in the NLI-1/2 Cask with Respect to Shielding	45
Table 3-5.	Minimum Cool Times for Transportable Assemblies in the NLI-1/2 Cask with Respect to Decay Heat	47
Table 3-6.	Combined Transportable Limits for Extended Burnup Fuels in the NLI-1/2 Cask	49
Table 3-7.	Combined Transportable Limits for Extended Burnup Fuels in a Modified NLI-1/2 Cask	51
Table 4-1.	Licensed Fuel Parameters for the NLI-10/24 Cask	59
Table 4-2.	NLI-10/24 Assembly Envelopes	58
Table 4-3.	Maximum Enrichments Transportable in the NLI-10/24 Cask	63
Table 4-4.	Minimum Cool Times for Transportable Assemblies in the NLI-10/24 Cask with Respect to Shielding	66

Table 4-5.	Number of Maximum Decay Heat Assemblies Transportable by NLI-10/24 Cask (150 days cool time)	68
Table 4-6.	Decay Times to Ship a Full Load of Assemblies of the Same Type and Burnup in the NLI-10/24 Cask	68
Table 4-7.	Combined Transportable Limits for 8 PWR and 20 BWR Extended Burnup Fuel Assemblies in the NLI-10/24 Cask	71
Table 4-8.	Combined Limits for 9 PWR and 20 BWR Extended Burnup Fuel Assemblies in a Modified NLI-10/24 Cask	74
Table 5-1.	NAC-3K Fuel Assembly Specifications	81
Table 5-2.	NAC-3K Assembly Envelope	82
Table 5-3.	Maximum Enrichments Transportable by the NAC-3K Cask	84
Table 5-4.	Minimum Cool Times for Transportable Assemblies in the NAC-3K Cask with Respect to Shielding	85
Table 5-5.	Maximum Decay Heat Assemblies Transportable by NAC-3K Cask (150 days cool time) with Respect to Heat Rejection	88
Table 5-6.	Cool Times to Ship a Full Load of Assemblies of the Same Type and Burnup in the NAC-3K Cask with Respect to Heat Rejection	88
Table 5-7.	Cool Times Required for Transport Based on Fission Gas Handling for the NAC-3K Cask	90
Table 5-8.	Combined Limits for 8 PWR Extended Burnup Fuel Assemblies in the NAC-3K Cask	91
Table 7-1a.	Westinghouse 15x15 Fuel Physical Parameters	101
Table 7-1b.	Westinghouse 15x15 Photon Spectrum, 35000 MWD/MTU	102
Table 7-1c.	Westinghouse 15x15 Photon Spectrum, 45000 MWD/MTU	103
Table 7-1d.	Westinghouse 15x15 Photon Spectrum, 55000 MWD/MTU	104
Table 7-1e.	Westinghouse 15x15 Average Neutron Source	105
Table 7-1f.	Westinghouse 15x15 Decay Heat	106
Table 7-1g.	Westinghouse 15x15 Tritium Production	107
Table 7-1h.	Westinghouse 15x15 Krypton-85 Production	108
Table 7-1i.	Westinghouse 15x15 Xenon-131m Production	109
Table 7-2a.	Westinghouse 17x17 Fuel Physical Parameters	110

Table 7-2b.	Westinghouse 17x17 Photon Spectrum, 35000 MWD/MTU	111
Table 7-2c.	Westinghouse 17x17 Photon Spectrum, 45000 MWD/MTU	112
Table 7-2d.	Westinghouse 17x17 Photon Spectrum, 55000 MWD/MTU	113
Table 7-2e.	Westinghouse 17x17 Average Neutron Source	114
Table 7-2f.	Westinghouse 17x17 Decay Heat	115
Table 7-2g.	Westinghouse 17x17 Tritium Production	116
Table 7-2h.	Westinghouse 17x17 Krypton-85 Production	117
Table 7-2i.	Westinghouse 17x17 Xenon-131m Production	118
Table 7-3a.	Westinghouse 17x17 OFA Fuel Physical Parameters	119
Table 7-3b.	Westinghouse 17x17 OFA Photon Spectrum, 35000 MWD/MTU	120
Table 7-3c.	Westinghouse 17x17 OFA Photon Spectrum, 45000 MWD/MTU	121
Table 7-3d.	Westinghouse 17x17 OFA Photon Spectrum, 55000 MWD/MTU	122
Table 7-3e.	Westinghouse 17x17 OFA Average Neutron Source	123
Table 7-3f.	Westinghouse 17x17 OFA Decay Heat	124
Table 7-3g.	Westinghouse 17x17 OFA Tritium Production	125
Table 7-3h.	Westinghouse 17x17 OFA Krypton-85 Production	126
Table 7-3i.	Westinghouse 17x17 OFA Xenon-131m Production	127
Table 7-4a.	Combustion Engineering 14x14 Fuel Physical Parameters	128
Table 7-4b.	Combustion Engineering 14x14 Photon Spectrum, 35000 MWD/MTU	129
Table 7-4c.	Combustion Engineering 14x14 Photon Spectrum, 45000 MWD/MTU	130
Table 7-4d.	Combustion Engineering 14x14 Photon Spectrum, 55000 MWD/MTU	131
Table 7-4e.	Combustion Engineering 14x14 Average Neutron Source	132
Table 7-4f.	Combustion Engineering 14x14 Decay Heat	133
Table 7-4g.	Combustion Engineering 14x14 Tritium Production	134
Table 7-4h.	Combustion Engineering 14x14 Krypton-85 Production	135
Table 7-4i.	Combustion Engineering 14x14 Xenon-131m Production	136

Table 7-5a. Combustion Engineering 16x16 Fuel Physical Parameters 137

Table 7-5b. Combustion Engineering 16x16 Photon Spectrum, 35000 MWD/MTU 138

Table 7-5c. Combustion Engineering 16x16 Photon Spectrum, 45000 MWD/MTU 139

Table 7-5d. Combustion Engineering 16x16 Photon Spectrum, 55000 MWD/MTU 140

Table 7-5e. Combustion Engineering 16x16 Average Neutron Source 141

Table 7-5f. Combustion Engineering 16x16 Decay Heat 142

Table 7-5g. Combustion Engineering 16x16 Tritium Production 143

Table 7-5h. Combustion Engineering 16x16 Krypton-85 Production 144

Table 7-5i. Combustion Engineering 16x16 Xenon-131m Production 145

Table 7-6a. Babcock and Wilcox 15x15 Fuel Physical Parameters 146

Table 7-6b. Babcock and Wilcox 15x15 Photon Spectrum, 35000 MWD/MTU 147

Table 7-6c. Babcock and Wilcox 15x15 Photon Spectrum, 45000 MWD/MTU 148

Table 7-6d. Babcock and Wilcox 15x15 Photon Spectrum, 55000 MWD/MTU 149

Table 7-6e. Babcock and Wilcox 15x15 Average Neutron Source 150

Table 7-6f. Babcock and Wilcox 15x15 Decay Heat 151

Table 7-6g. Babcock and Wilcox 15x15 Tritium Production 152

Table 7-6h. Babcock and Wilcox 15x15 Krypton-85 Production 153

Table 7-6i. Babcock and Wilcox 15x15 Xenon-131m Production 154

Table 7-7a. Babcock and Wilcox 17x17 Fuel Physical Parameters 155

Table 7-7b. Babcock and Wilcox 17x17 Photon Spectrum, 35000 MWD/MTU 156

Table 7-7c. Babcock and Wilcox 17x17 Photon Spectrum, 45000 MWD/MTU 157

Table 7-7d. Babcock and Wilcox 17x17 Photon Spectrum, 55000 MWD/MTU 158

Table 7-7e. Babcock and Wilcox 17x17 Average Neutron Source 159

Table 7-7f. Babcock and Wilcox 17x17 Decay Heat 160

Table 7-7g. Babcock and Wilcox 17x17 Tritium Production 161

Table 7-7h. Babcock and Wilcox 17x17 Krypton-85 Production 162

Table 7-7i. Babcock and Wilcox 17x17 Xenon-131m Production 163

Table 7-8a. General Electric 8x8RP Fuel Physical Parameters 164

Table 7-8b. General Electric 8x8RP Photon Spectrum, 30000 MWD/MTU 165

Table 7-8c. General Electric 8x8RP Photon Spectrum, 40000 MWD/MTU 166

Table 7-8d. General Electric 8x8RP Photon Spectrum, 50000 MWD/MTU 167

Table 7-8e. General Electric 8x8RP Average Neutron Source 168

Table 7-8f. General Electric 8x8RP Decay Heat 169

Table 7-8g. General Electric 8x8RP Tritium Production 170

Table 7-8h. General Electric 8x8RP Krypton-85 Production 171

Table 7-8i. General Electric 8x8RP Xenon-131m Production 172

1.0 Introduction

This report documents the findings of Nuclear Assurance Corporation (NAC) under VEPCo/DOE contract number DE-AC02-79ET34014, "Extended Fuel Burnup Demonstration Program" where NAC was a subcontractor to VEPCo. The objective for this program was to determine the ability to transport fuel assemblies with burnups of 55,000 MWD/MTU. A summary of the scope of work appears as Section 1.1 while summaries of the limits of transportability for the unmodified and modified (optimized) casks are presented in Sections 1.2 and 1.3, respectively.

NAC's efforts under the above contract revolved around four(4) cask designs: the NAC-1 and NLI-1/2, which are legal weight truck casks, and the NLI-10/24 and NAC-3K, which are multi-element rail casks. All these casks except the NAC-3K have existing Certificates of Compliance issued by the U.S. Nuclear Regulatory Commission. The NAC-3K cask is not presently docketed for NRC review.

Each cask is evaluated in a separate section of this report. Each cask section contains: a cask description; an evaluation of weight and size compatabilities; an evaluation for criticality, shielding, heat rejection, and fission gas handling; a summation and combination of transportable limits from these evaluations; and a recommendation as to cask design modifications which will optimize the cask's ability to transport the fuel types considered. Following the individual cask sections is a description of the analysis methodologies used in the cask evaluations. This report concludes with a presentation of the fuel parameters used to evaluate the fuel designs.

1.1 Statement of Work

The VEPCo/DOE Extended Fuel Burnup Demonstration Program requires that NAC perform the following tasks:

1) Upon receipt of fuel assembly data for each of the assembly types under consideration, an evaluation will be done to determine the applicability to the analysis requirements. The evaluation will determine the

completeness of the data and identify any additional data required to complete the program analyses.

2) The four(4) cask designs which NAC must evaluate (i.e., NAC-1, NLI-1/2, NAC-3K, NLI-10/24) will be analyzed to determine the maximum licensable PWR and BWR burn-up, enrichment and assembly capability achievable without cask modification up to burnups of 55,000 MWD/MTU. The evaluation of each cask design shall include:

a) A verification that fuel dimensions and weights do not exceed cask capacity or NRC Certificate of Compliance,

b) A determination of the highest enrichment fuel transportable with the present cask configuration,

c) A determination of the highest burnup fuel transportable without exceeding radiation field limits,

d) A determination of the highest burnup fuel transportable without exceeding the present decay heat limits for the casks, and

e) A determination of the highest burnup fuel transportable without exceeding the present fission gas handling capability of the casks.

3) Once the envelope of transportable assembly parameters relative to burnup has been determined for each assembly type, develop and recommend changes to the casks designs which will enable them to carry the maximum burnup and enrichment for the various fuel types. If the maximums are unattainable, then determine the maximum values of burnup and enrichment which the casks may transport after design modification.

1.2 Summary of Evaluation Results

Each of the four(4) cask designs evaluated can transport some of the extended burnup fuel assemblies under consideration; some more easily than others. Evaluation results for each of the casks are summarized in Table 1-1 and in the following separate cask sections.

Table 1-1. Maximum Transportable Enrichments and Limiting Cool Times to Ship 55,000 MWD/MTU PWR or 50,000 MWD/MTU BWR Fuels in Unmodified Casks

	NAC-1			NLI-1/2			NLI-10/24			NAC-3K		
Assembly (PWR)	# Assy.	% U-235	Cool Time	# Assy.	% U-235	Cool Time	# Assy.	% U-235	Cool Time	# Assy.	% U-235	Cool Time
W 15 x 15	1	5.1	3.50Y	1	4.0	1.70Y	8	6.1	355D	8	5.07	>10Y
W 17 x 17	1	4.9	3.75Y	1	3.9	1.9Y	8	5.9	1.4Y	8	5.38	>10Y
W 17 x 17 OFA	1	4.7	3.25Y	1	3.7	1.00Y	8	5.5	300D	8	5.60	>10Y
CE 14 x 14	1	4.7	2.75Y	1	3.8	240D	8	5.5	1.25Y	8	5.51	>10Y
CE 16 x 16	---------Not Carried----------			----------Not Carried----------			8	5.5	300D	8	5.87	>10Y
BW 15 x 15	1	5.3	3.75Y	1	4.1	1.9Y	8	6.4	1.4Y	8	5.11	>10Y
BW 17 x 17	1	5.1	4.00Y	1	3.9	1.0Y	8	6.0	1.0Y	8	5.12	>10Y
Assembly (BWR)												
GE 8 x 8 RP	---------Not Carried----------			2	>5.0	150D	20	4.6	150D	----------Not Carried---------		

1.2.1 NAC-1 Cask

The NAC-1 cask cannot ship early discharge fuel asemblies "wet" due to fission gas handling considerations. To ship fuel dry, each PWR assembly must be cooled to 2.5 kw or lower with BWR assemblies cooling to 1.25 kw before shipment. The present cask cavity is too short to accomodate Combustion Engineering 16 x 16 and General Electric 8 x 8 RP fuel assemblies. The minimum enrichments necessary to achieve the target burnups can be transported in the NAC-1 cask for the remaining fuel types. The fuel cool time range for the highest burnup transportable (55,000 MWD/MTU) is from 2.75 years for Combustion Engineering 14 x 14 assemblies to 4.0 years for Babcock and Wilcox 17 x 17 assemblies.

1.2.2 NLI-1/2 Cask

The NLI-1/2 cask can handle all fission gas products from the extended burnup fuels without exceeding present release limits. Due to lack of cavity length the Combustion Engineering 16 x 16 assembly may not be shipped. The General Electric 8 x 8 RP assemblies are transportable after 150 days cool time. The maximum enrichment transportable is restricted because of the neutron reflection of the uranium gamma shield. The maximum burnups attainable from these enrichments is from 40,000 MWD/MTU to 45,000 MWD/MTU. No burnup credit is taken. If burnup credit is taken to allow shipment of 55,000 MWD/MTU burnup PWR fuels, the cool times for the transport of these assemblies ranges from 240 days for the Combustion Engineering 14 x 14 to 1.9 years for the Babcock and Wilcox 15 x 15.

1.2.3 NLI-10/24 Cask

The NLI-10/24 cask may not ship a full load of 55,000 MWD/MTU PWR assemblies without the use of burnup credit. Criticality limitations restrict the payload to eight(8) PWR assemblies and 20 BWR assemblies. There are no dimensional difficulties in shipping the various fuel types. The BWR fuel may

be shipped after 150 days cool time (20 assemblies) while PWR fuel (8 assemblies) may be shipped with cool times of from 300 days for the Westinghouse 17 x 17 OFA assembly to 1.4 years for the Babcock and Wilcox 15 x 15 assembly.

1.2.4 NAC-3K Cask

The NAC-3K cask was designed for Biblis-type PWR fuels. BWR type fuels were not included in the NAC-3K design basis and were not evaluated for this report. Without burnup credit only eight(8) PWR assemblies may be shipped with cool times (for 55,000 MWD/MTU) of 16 to 22 years.

1.3 Summary of Design Recommendations

Each of the four(4) cask designs was evaluated to improve the ability of the casks to transport extended burnup fuels through design modification. The NAC-3K cask does not have a design modification recommended. The effects of the other cask's design modifications on the transport of 55,000 MWD/MTU fuels is shown in Table 1-2.

1.3.1 NAC-1 Cask

The design modification recommended for the NAC-1 cask is to redesign the cavity closure lid to add one inch to the cavity length. This will require a revision to the structural analysis to show that the new lid design does meet all the regulatory requirements of the old closure. This modification will allow the transport of Combustion Engineering 16 x 16 and General Electric 8 x 8 RP assemblies.

1.3.2 NLI-1/2 Cask

No physical design modification is recommended. The design addition recommended is to add 1% boron to the water shield tank to improve neutron shielding. The improvment in shielding reduces the cool times required to ship 55,000 MWD/MTU burnup assemblies to a maximum of 300 days.

Table 1-2. Maximum Transportable Enrichments and Limiting Cool Times to Ship 55,000 MWD/MTU PWR or 50,000 MWD/MTU BWR Fuels in Modified (Optimized) Casks

	NAC-1			NLI-1/2				NLI-10/24		
Assembly (PWR)	# Assy.	% U-235	Cool Time	# Assy.	% U-235	GWD/MTU*	Cool Time	# Assy.	% U-235	Cool Time
W 15 x 15	1	5.1	3.50Y	1	4.0	6.0	270D	9	5.35	1.0Y
W 17 x 17	1	4.9	3.75Y	1	3.9	8.0	270D	9	5.1	1.1Y
W 17 x 17 OFA	1	4.7	3.25Y	1	3.7	9.0	210D	9	4.85	330D
CE 14 x 14	1	4.7	2.75Y	1	3.8	6.5	150D	9	4.9	270D
CE 16 x 16	1	4.7	3.25Y	----------Not Carried----------				9	4.9	330D
BW 15 x 15	1	5.3	3.75Y	1	4.1	6.0	270D	9	5.55	1.0Y
BW 17 x 17	1	5.1	4.00Y	1	3.9	11.0	300D	9	5.25	1.1Y
Assembly (BWR)										
GE 8 x 8 RP	2	>5.0	1.50Y	2	>5.00	0.0	150D	20	4.6	150D

Note: No design recommendations are made for modifying the NAC-3K

*Minimum burnup to reduce initial enrichments for 55,000 MWD/MTU burnup to transportable limits

1.3.3 NLI-10/24 Cask

In order to maximize the number of 55,000 MWD/MTU assemblies transported in the NLI-10/24, a nine element basket is recommended. Nine assemblies require more cool time to achieve the rated heat load than eight assemblies. The basket neutron absorber was changed to Boral while the absorber length is increased to account for the longer active fuel lengths of the Combustion Engineering 16 x 16 and General Electric 8 x 8 RP assemblies.

1.3.4 NAC-3K Cask

The extent of required design modification is of the same order of magnitude as desigining a new cask specifically for the extended burnup fuel. Therefore, no design recommendation is made.

2.0 NAC-1 Cask Evaluation

The NAC-1(NFS-4) cask is a part of the cask fleet operated by the Nuclear Assurance Corporation. There are presently seven(7) casks of the NAC-1 design. At this time, the NAC-1 cask license is being reviewed by the U.S. NRC for renewal. The cask was originally designed in 1972 with Certificate of Compliance No. 6698 issued for the design on November 1, 1974.

2.1 Cask Description

The NAC-1 spent fuel shipping cask is a universal cask capable of accommodating a broad range of fuel assemblies from either pressurized or boiling water reactors. It is designed to meet or exceed all of the requirements delineated in Part 71 of Title 10, Chapter 1 of the Code of Federal Regulations for Fissile Class III shipments of large quantities of radioactive material. The primary means of transport is by legal weight truck under sole use assignment. The cask has an interchangeable basket to transport either 2 BWR or 1 PWR fuel assemblies or radioactive non-fuel bearing material.

The NAC-1 spent fuel shipping cask provides shielding to permit transport of radioactive material. The primary shield material is lead, encased within stainless steel shells where the inner shell serves as the primary containment. The outer shell is the principal structural member of the cask. The ends of the cask are stainless steel castings that complete the shielding. The inner shell and associated valves and bolted closure form a pressure vessel that must retain its integrity during all normal transport and hypothetical accident conditions. Consequently, it is designed to meet or exceed all of the requirements of Section III of the American Society of Mechanical Engineers Boiler and Pressure Vessel Code.

The principal features of the cask are the containment boundary, the shielding and heat dissipation systems and the lifting and tiedown systems. The configuration of the cask is shown in Figure 2-1. Each of the important

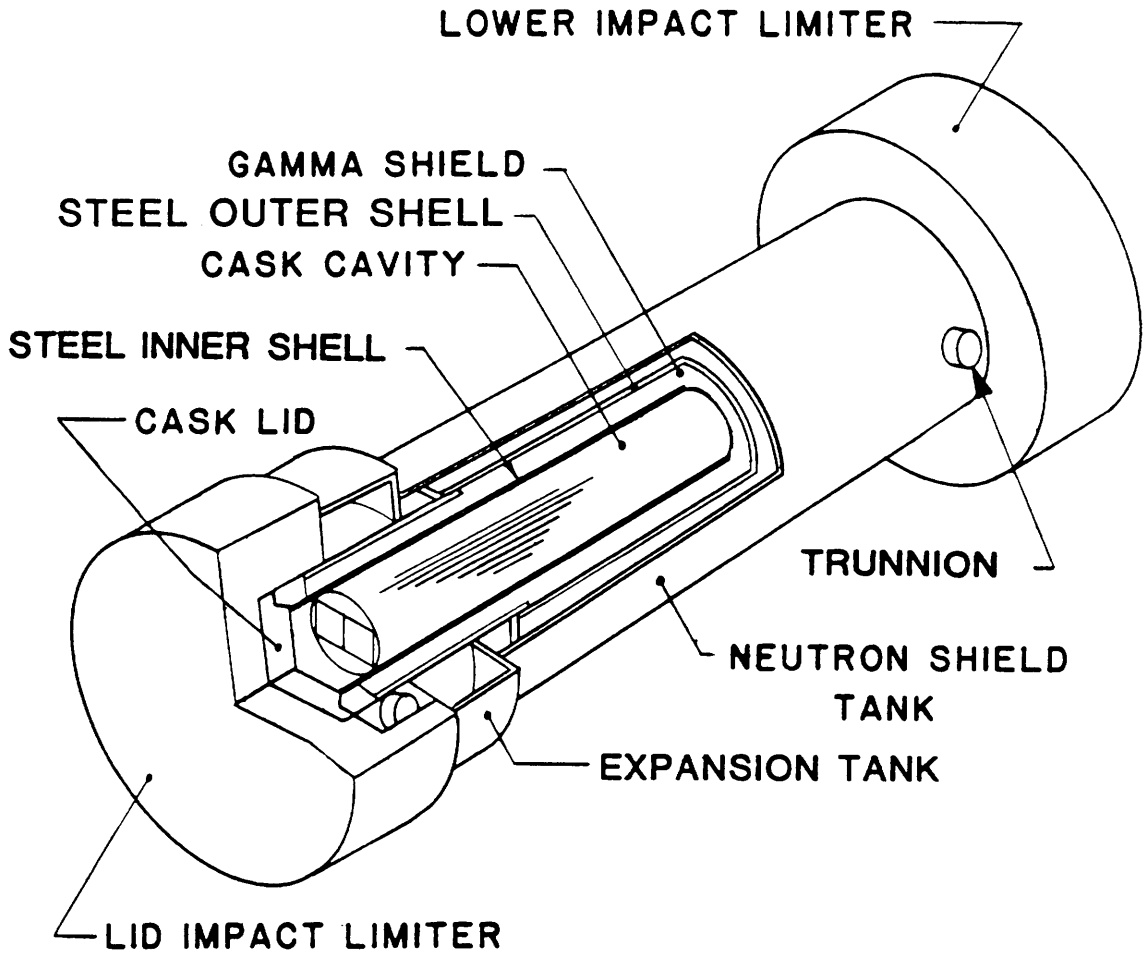

SPENT FUEL SHIPPING CASK
NAC I

Figure 2-1. NAC-1 Spent Fuel Shipping Cask

systems is described in the following sections. Cross sections through the cask showing PWR and BWR assemblies are presented in Figures 2-2 and 2-3, respectively.

2.1.1 Containment Boundary

The containment boundary consists of the surfaces and seals that serve to prevent the escape of the radioactive material being transported in the cask. The primary containment boundary is the inner shell of the cask, the upper and lower end castings, the bolted closure with O-rings, the drain and vent valve and the rupture disk. The primary containment is supplemented by the outer shell of the cask.

The inner shell of the cask is a right circular cylinder with internal diameter of 13.5 inches. The inner shell forms the cask cavity wall and is entirely stainless steel, 0.31 inches thick. The end castings are large stainless steel structures that provide structural support for the two shells and with the bolted closure provides shielding for the ends of the cask. The end casting at the upper end is annular with a tapered central hole that mates with the bolted closure. The lower end casting is 3 inches thick with a central section that is a frustrum of a cone which is an additional 5 inches thick. The maximum thickness of the end casting is 8 inches.

There are five penetrations through the containment boundary. The main penetration is the opening that permits access to the cavity for loading and unloading the fuel assemblies. This opening is closed by a stainless steel plug that is bolted to the upper end casting and sealed by double O-rings. The main section of the plug is a frustrum of a cone to prevent openings in the shielding that would cause radiation streaming. Three penetrations permit draining and venting of the cavity during loading and unloading operations. Each of these penetrations is sealed by a fire rated ball valve which is protected by a standoff ring, bolted cover and the impact limiters. Mechanical linkages are attached to the valve handles to assure that the valves are in the closed position prior to the installation of the covers for shipping. The remaining penetration is to provide relief in the unlikely

NAC 1 Construction (PWR Basket)

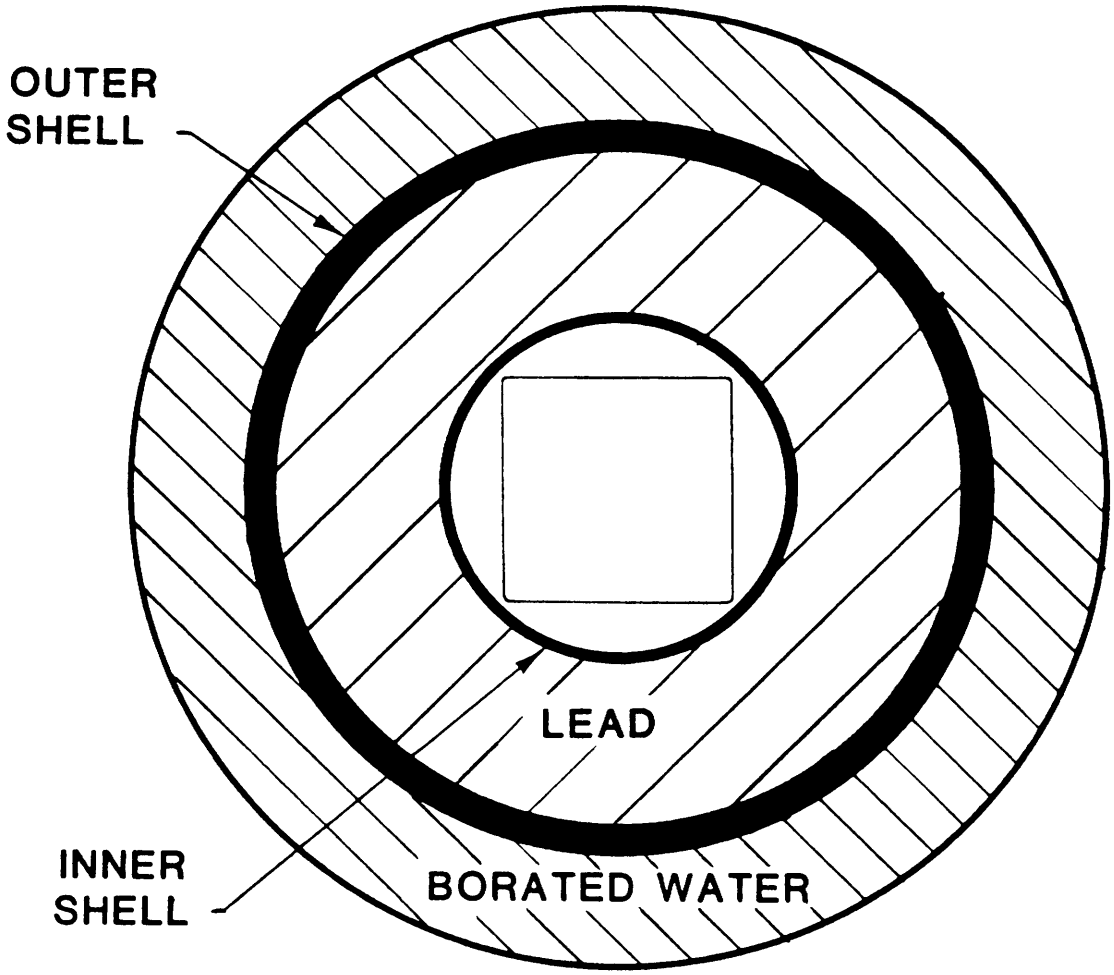

1 PWR Assembly

Figure 2-2. NAC-1 Cask Cross-Section, PWR Fuel

NAC 1 Construction (BWR Basket)

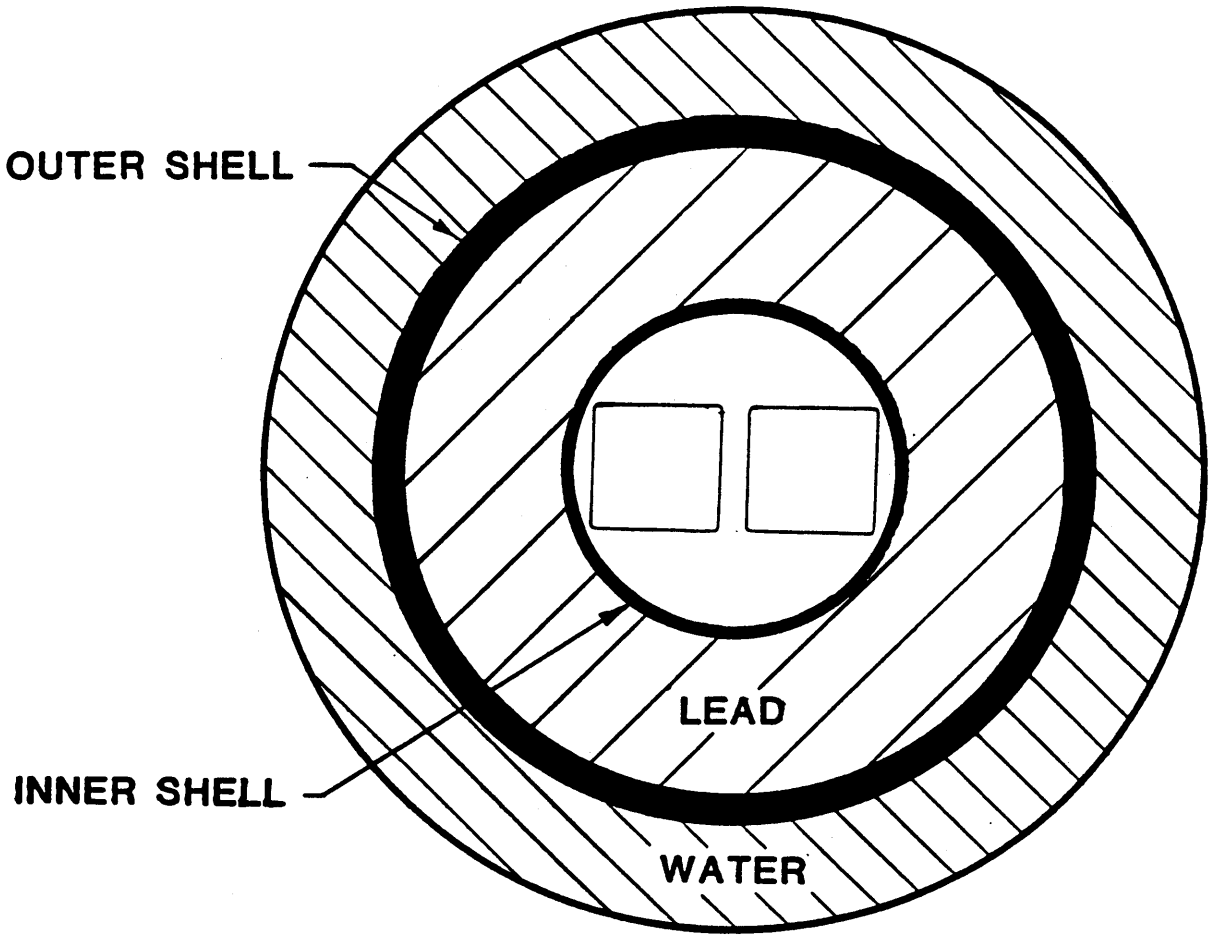

2 BWR Assemblies

Figure 2-3. NAC-1 Cask Cross-Section, BWR Fuel

event of over-pressurization of the cavity. This penetration is sealed by a rupture disk and a relief valve. A cover is provided to keep out dirt and moisture and is designed to rupture in the event of actuation of the relief valve.

A fourth fire rated ball valve is used to seal a penetration in the wall which is used to pressurize the region between the O-rings to assure the adequacy of the seal prior to shipment. This penetration does not directly communicate with the cask cavity because the inner O-ring provides a seal between the cavity and this penetration.

A sketch of the containment boundary is presented in Figure 2-4 where each of the penetrations is identified for clarity.

All of the valves are totally covered by the impact limiters during transport. Additionally, the valves are each protected by standoff rings with covers welded to the end castings which restrict penetration during the hypothetical accident conditions. A sealed bolted cover for the standoff rings provides additional protection.

2.1.2 Shielding

The shielding consists of the cask body and the neutron shield tank. The cask wall includes lead that is cast in place to attenuate gamma radiation that is emitted from the spent fuel. The 6.6 inches of lead is supplemented by two stainless steel shells which are 0.31 and 1.25 inches thick. The ends of the cask are entirely stainless steel, 8.0 and 7.5 inches thick at the bottom and top respectively.

The thickness of the lead is reduced by 1.25 inches in the upper 25 inches of the cask wall to reduce the weight of the cask. This region is adjacent to the upper end fitting and fuel rod plenum portions of the fuel assembly and the reduced shielding remains adequate to attenuate the radiation emitted by the fuel assembly.

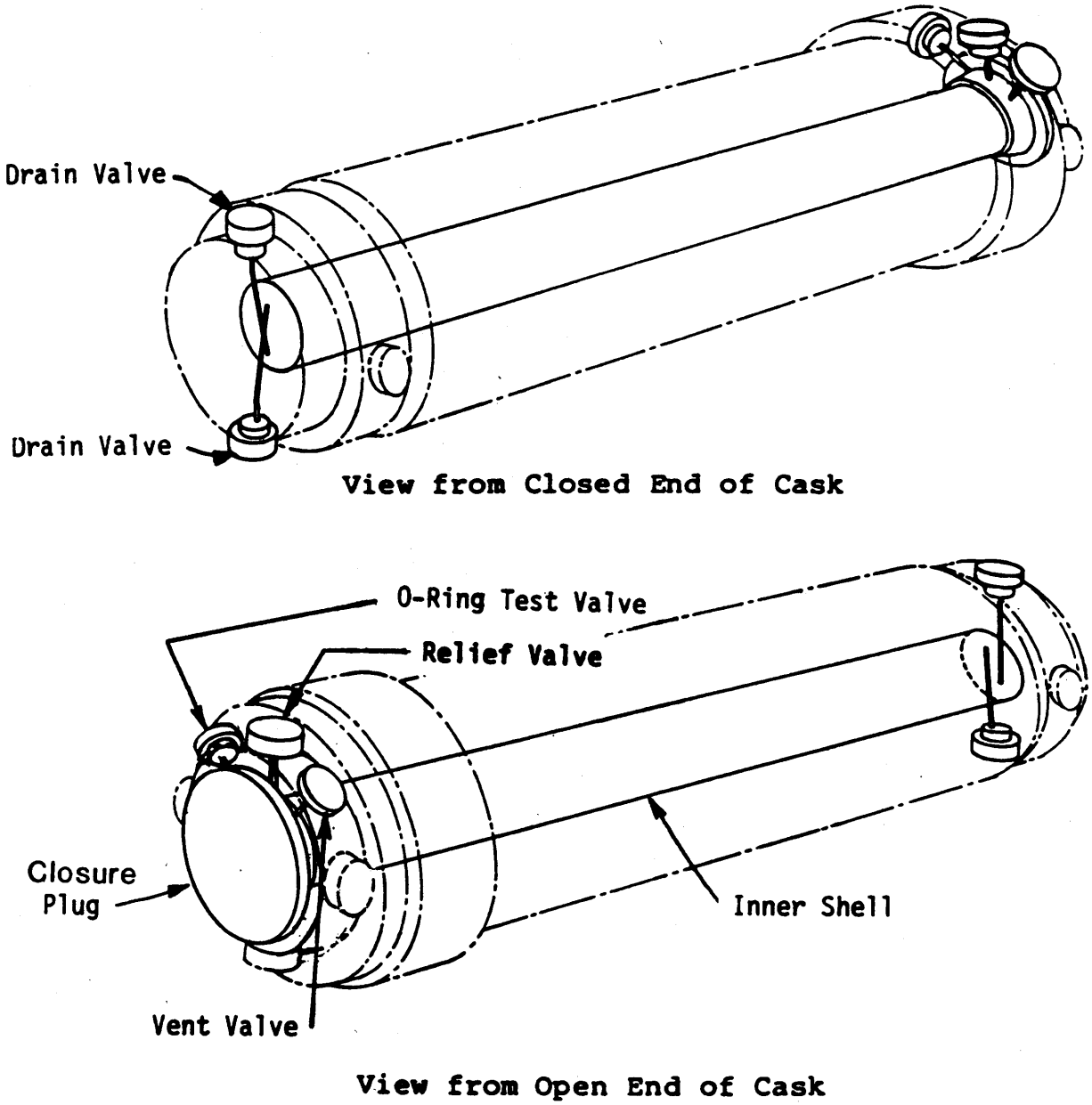

Figure 2-4. NAC-1 Cask Containment Boundary

Neutron radiation from the spent nuclear fuel is attenuated by borated water in the neutron shield tank. Water serves to reduce the energy of the neutrons so that the boron is more effective for absorbing the neutrons. The water is mixed with ethylene-glycol to form a solution that has a low freezing point to prevent freezing, thus avoiding the volumetric expansion that accompanies phase change. The water in the cavity during wet shipment also aids in the attenuation of neutron radiation; however, no credit was taken for this water since the cask may be shipped dry.

2.1.3 Heat Rejection

Heat rejection within the NAC-1 cask is accomplished by entirely passive means. The maximum decay heat load transportable is 11.5 kW. All heat released by the fuel assembly is transferred from the fuel to the cask wall by natural circulation of the water in the cavity or by a combination of conduction, convection, and radiation when the shipment is dry. The heat is then conducted through the wall of the cask. Copper fins at the interfaces between the lead and stainless steel walls provide a path for transfer of heat across any gap that may develop between the lead and the stainless steel shells due to their different rates of thermal expansion. A small portion of the heat is rejected through the ends. However, the impact limiters partially isolate the ends from the environment.

Heat is conducted from the outer shell of the cask to the neutron shield fluid. Natural circulation in the shield tank will transfer the heat from the cask wall to the outer surface of the shield tank where natural circulation of and conduction through the ambient air in addition to radiation will transfer the heat to the environment.

2.1.4 Impact Limiters

The impact limiters are removable sacrificial members that are attached to both ends of the cask to absorb energy during an impact by crushing. They are designed to protect the cask in all possible impact orientations - end, side, and oblique. The crushable material in the impact limiters is an isotropic aluminum honeycomb.

2.1.5 Transportable Contents

The NAC-1 cask is designed to transport any of three different combinations of fuel assemblies. A single pressurized water reactor fuel assembly or two boiling water reactor fuel assemblies can be accommodated in the corresponding basket. Additionally, four fuel assemblies from a boiling water reactor similar to the design employed for Dresden Unit 1 and the appropriate basket can be transported in the NAC-1 cask. The characteristics of the various fuel assembly types are presented in Table 2-1.

Both the basket and the water within the cavity are considered to be a part of the contents of the cask because there is the possibility that either can acquire a part of the radioactivity of the fuel assembly that is being transported.

2.2 Physical/Dimensional Evaluation

The NAC-1 cask may carry one(1) PWR or two(2) BWR fuel assemblies using a fuel basket appropriate to that fuel type. The envelopes for these baskets are defined by: 1) the length from the inside surface of the lid to the bottom of the respective basket, 2) the cross-section dimensions for each assembly cavity, and 3) the total design weight of the fuel. These dimensions are taken from the SAR and are listed in Table 2-2 for the two assembly types.

Table 2-2. NAC-1 Assembly Envelopes

Assembly Type	Envelope		Fuel
	Length (in)	Side (in) x Side (in)	Design Weight (lbs)
PWR	176	8.80 x 8.80	2500
BWR	176	5.75 x 5.75	2500

These envelope dimensions were compared to the physical fuel data presented in Section 7. The Combustion Engineering 16 x 16 and the General Electric 8 x 8 RP assemblies will not be transportable in the NAC-1 cask since the assemblies

Table 2-1. NAC-1 Fuel Assembly Characteristics

	Fuel Assemblies				
	First Generation			Second Generation	
	San Onofre	Dresden 1	LaCrosse	PWR	BWR
Number of Assemblies	1	4	2	1	2
Envelope (inches)	7.8	4.2	5.63	8.6	5.44
Fuel Length (Inches)	121.	110.	83.8	150.	144.
Enrichment (%)	4.1	2.5	4.0	3.6	3.0
Fuel Weight (kg)	-	197	122	480	197
Cool Time (days)	120	120	120	120	120

are too long for the cavity length. These assemblies also have an active fuel length of 150 inches. This would require a revision to the Certificate of Compliance to provide for an active fuel length to 150 inches. All other evaluated assemblies are transportable in the NAC-1 cask with respect to weight and shape.

2.3 Criticality Evaluation

2.3.1 Existing Analyses

The NAC-1 SAR criticality analyses show that the NAC-1 is capable of carrying the licensed enrichments of 3.6 w/o U-235 for PWR fuel and 3.0 w/o U-235 for BWR fuel. These analyses were performed for significantly lower enrichments than the enrichments required to reach the desired assembly-average burnups of 55,000 MWD/MTU for PWR and 50,000 MWD/MTU for BWR fuel. Thus the SAR analyses do not show the capability or inability of the cask to carry high burnup fuel.

2.3.2 New Analyses

The most reactive PWR fuel type was identified through analysis as the Westinghouse 17 x 17 OFA. All PWR fuel types are bounded by this most reactive "worst case." A detailed criticality analysis was performed using the Westinghouse 17 x 17 OFA assembly for the normal operation and hypothetical accident conditions. A criticality analysis was also performed for the General Electric 8 x 8 RP fuel assembly. Additional analysis was performed for each of the six other fuel designs. This allowed a determination of the maximum enrichment and corresponding burnup for each assembly type.

2.3.3 Determination of Limits

The criticality results for the seven PWR and one BWR fuel types were evaluated to determine the intersection of the k-effective versus enrichment relationship with the 0.95 k-effective limit adopted by the NRC. This defines the maximum enrichment for each fuel type that can be carried in the NAC-1, as well as the associated burnup for that enrichment, as shown in Table 2-3.

Table 2-3. Maximum Enrichments Transportable in the NAC-1 Cask

Assembly (PWR)	Maximum % Enrichment	Respective Burnup (GWD/MTU)	Enrichment Required*
Westinghouse 15 x 15	5.1	59	4.8
Westinghouse 17 x 17	4.9	57	4.8
Westinghouse 17 x 17 OFA	4.7	55	4.7
Combustion Engineering 14 x 14	4.7	59.5	4.5
Combustion Engineering 16 x 16	4.7	55	4.7
Babcock & Wilcox 15 x 15	5.3	62	4.8
Babcock & Wilcox 17 x 17	5.1	55	5.1

Assembly (BWR)	Maximum % Enrichment	Respective Burnup (GWD/MTU)	Enrichment Required**
General Electric 8 x 8 RP	>5.0	>50	4.33

*Required enrichment to achieve burnups of 55,000 MWD/MTU in PWR fuel.

**Required enrichment to achieve burnups of 50,000 MWD/MTU in BWR fuel.

These results show that all fuel types examined can be carried in the NAC-1 cask at the enrichments required to obtain assembly average burnups of 55,000 MWD/MTU for the PWR fuel and 50,000 MWD/MTU for the BWR fuel.

2.4 Shielding Evaluation

2.4.1 Existing Analyses

The NAC-1 SAR contains analyses of normal operation and hypothetical accident shielding that justify the licensed limit of a minimum of 120 days cool time for PWR or BWR fuel. No explicit burnup limit is stated. Reliance is placed instead upon the mandatory health physics surveys prior to shipment. These surveys insure that the combined neutron and gamma dose rates are less than 10 mRem/hr at 6 feet from the cask surface. Analyses of hypothetical accident scenarios were made to allow prediction of hypothetical accident dose rates from observed dose rates during normal operation. The results of the hypothetical accident analyses showed that the gamma dose rate at 3 feet from the cask surface will be increased by a factor of 1.4 and the neutron dose rate will increase by a factor of 27. Thus a health physics survey performed prior to shipment can be utilized to insure that the dose rates in a hypothetical accident will be less than the NRC limit of 1000 mRem/hr at 3 feet from the cask surface for combined neutron and gamma radiation.

2.4.2 Determination of Limits

The NAC-1 SAR shielding analysis was evaluated to determine the neutron and gamma dose rates per unit source strength for normal operation and hypothetical accident scenarios. This allowed the source strengths provided by Westinghouse as a function of cool time to be utilized to determine the neutron, gamma, and total (neutron plus gamma) dose rates for normal operation and hypothetical accident cases for each assembly type and burnup. The resulting dose rates versus cool time were compared to the NRC limits to determine a minimum cool time. In all cases fuel can be shipped at 150 days cool time without exceeding shielding limits.

2.5 Heat Rejection Evaluation

2.5.1 Existing Analyses

The NAC-1 SAR thermal section was examined to determine the reported data used in the cask's thermal evaluation. The cask has a rated heat load of 11.5 kW. The cavity bulk water temperature at steady state conditions on a 130°F day with insolance and a full heat load is 318°F. The outside skin temperature for the same conditions is 295°F. The cask was modeled in sections with an effective thermal conductivity calculated for each section. A R-Z model of the cask using these section conductivities was made to perform the analysis using HEATING5.

The model sections were included in the SAR as computer inputs. This allowed the recreation of these models for this evaluation. These section models remain available for future licensing efforts.

2.5.2 Determination of Limits

The maximum transportable values of decay heat for a single assembly at 11.5 kW for PWR and 5.75 kW for BWR. By inspection of the 150 day decay heat values for BWR fuel it may be shown that all burnups of BWR fuel may be carried after 150 days of cool time.

For PWR assemblies it is necessary to examine the tables of decay heat versus cool time presented in the fuel data section (Section 7.0) for the proper cool time to be chosen such that the decay heat is less than 11.5 kW. This data has been presented in Table 2-4 for each assembly and for each burnup.

2.6 Fission Gas Handling Evaluation

2.6.1 Existing Analyses

The existing containment analysis for the NAC-1 cask identifies five(5) leakage pathways from the cavity containment to the environment. These

Table 2-4. Minimum Cool Times for Transportable Assemblies in the NAC-1 Cask Due to Heat Rejection Limits

Assembly (PWR)	Cool Times for Burnups of		
	35 GWD/MTU	45 GWD/MTU	55 GWD/MTU
Westinghouse 15 x 15	150 days	180 days	210 days
Westinghouse 17 x 17	150 days	180 days	270 days
Westinghouse 17 x 17 OFA	150 days	150 days	210 days
Combustion Engineering 14 x 14	150 days	150 days	150 days
Combustion Engineering 16 x 16	150 days	180 days	210 days
Babcock and Wilcox 15 x 15	150 days	180 days	270 days
Babcock and Wilcox 17 x 17	150 days	180 days	270 days
Assembly (BWR)	**35 GWD/MTU**	**40 GWD/MTU**	**50 GWD/MTU**
General Electric 8 x 8 RP	150 days	150 days	150 days

pathways are the bolted double O-ring cavity closure, three(3) ball valve seals, and a pressure relief valve. The cask may ship PWR and BWR assemblies wet, or dry with reduced heat load. The SAR shows no release to the environment either during normal operating conditions or during the hypothetical accident. Leak rates of pathway devices were determined from manufacturers qualification tests.

2.6.2 New Analyses

There are two(2) mediums for radionuclide transport along the leakage pathways. These mediums are contaminated air and contaminated cavity water. Each medium covers the leakage pathways to varying degrees as the cask assumes various positions during the hypothetical accident. The NAC-1 cask cavity has a very small free gaseous volume during normal wet shipment. As a result, the concentration of fission gas in the cavity air is high and causes unacceptable levels of release across those leak pathways exposed to the cavity air. The levels of fission gas activity in the cask cavity coolant must be reduced by a factor of 10 before the release rates with extended burnups fuels are acceptable.

The NAC-1 cask may be shipped dry if the decay heat load is 2.5 kW or less. Shipping dry increases the gas volume inside the cavity such that a reduction in concentration is obtained. In addition, the removal of the cavity water and the reduction in cavity thermal load cause smaller operating pressures inside the cavity. Since pressure is the driving force for the leakage rates, shipping dry also reduces the rate of release by reducing the rate of leakage. This combination of reduced concentrations and reduced leakage rate limit the release of fission gas products to below 0.05 curies/week, a value very much below the prescribed limit.

Therefore, the ability to transport extended burnup fuel assemblies in the NAC-1 cask with respect to the fission gas handling capabilities of the cask is limited by the decay heat value of the assemblies shipped. As long as the total cavity thermal load is 2.5 kw or less and the cask is shipped dry, all burnups of all the assembly types are transportable by the NAC-1. Table 2-5

shows the cool times required for the assemblies such that they may be shipped in the NAC-1 cask.

2.7 Combined Results

The preceding sections have dealt with limiting factors for transporting extended burnup fuels on a case by case basis. This section compares all the limiting factors as a single case to define the combined limiting enrichment and cool time necessary to ship the assembly types.

The most limiting factors are fission gas handling and dimensional clearances. Two (2) fuel types may not be shipped in the NAC-1 due to the insufficient length of the cask cavity. The limits on fission gas handling require the NAC-1 cask to be shipped dry, requiring a heat load limit of 2.5 kW. Table 2-6 shows the maximum enrichment and minimum cool time transportable in the NAC-1 cask without license revision due to physical modification of the cask.

2.8 Design Modification Recommendations

The previous section presented the combined results of evaluating the limits on transportability of extended burnup fuels in the NAC-1 cask. The major restriction on transportability is cavity length and fission gas handling. This section examines the design options available for the NAC-1 cask and recommends an option for modification.

2.8.1 Design Options

The heat rejection and the fission gas handling capability of the cask are not subject to minor modifications since re-design of the primary gamma shield and containment boundary would be required. It is considered that this approach to design improvement will not be justifiable. Therefore, only design modifications which will affect the assembly envelopes by increasing the cavity length were considered.

Table 2-5. Minimum Cool Times Required for Transportable Assemblies in the NAC-1 Cask Due to Fission Gas Handling Limits

	Cool Time in Years for Burnups of		
Assembly (PWR)	35 GWD/MTU	45 GWD/MTU	55 GWD/MTU
Westinghouse 15 x 15	2.25	3.00	3.50
Westinghouse 17 x 17	2.50	3.00	3.75
Westinghouse 17 x 17 OFA	2.25	2.75	3.25
Combustion Engineering 14 x 14	1.75	2.25	2.75
Combustion Engineering 16 x 16	2.25	2.75	3.25
Babcock & Wilcox 15 x 15	2.25	3.00	3.75
Babcock & Wilcox 17 x 17	2.50	3.00	4.00
Assembly (BWR)	30 GWD/MTU	40 GWD/MTU	50 GWD/MTU
General Electric 8 x 8 RP	1.0	1.25	1.50

Table 2-6. Combined Transportable Limits for Extended Burnup Fuels in the NAC-1 Cask

Assembly (PWR)	% Enrichment	Cool Time in Years for Burnups of 35 GWD/MTU	45 GWD/MTU	55 GWD/MTU
Westinghouse 15 x 15	5.1	2.25	3.00	3.50
Westinghouse 17 x 17	4.9	2.50	3.00	3.75
Westinghouse 17 x 17 OFA	4.7	2.25	2.75	3.25
Combustion Engineering 14 x 14	4.7	1.75	2.25	2.75
Combustion Engineering 16 x 16	----------Not Carried by the NAC-1---------			
Babcock & Wilcox 15 x 15	5.3	2.25	3.00	3.75
Babcock & Wilcox 17 x 17	5.1	2.50	3.00	4.00
Assembly (BWR)		**30 GWD/MTU**	**40 GWD/MTU**	**50 GWD/MTU**
General Electric 8 x 8 RP	----------Not Carried by the NAC-1----------			

Re-design of the cask bolted closure lid would increase cavity length by shortening the frustrum which forms the closure lid and thickening the flange of the lid. This will shift the center of gravity of the lid toward the plane of the O-ring seals while conserving the lid's shielding capacity. The addition to cavity length will be one inch, a sufficient amount to allow shipment of the previously restricted assembly types, the Combustion Engineering 16 x 16 and General Electric 8 x 8 RP.

2.8.2 Design Recommendations

It is recommended that the NAC-1 cask bolted closure lid be modified. This design change will affect several aspects of the overall cask design. The free volume available for fission gas release will increase, lowering the operating pressure and reducing the leakage rate. The structural analysis of the lid would be redone to account for the thickened lid flange. Table 2-7 shows the combined results for the to be modified NAC-1 cask.

Table 2-7. Combined Transportable Limits for Extended Burnup Fuels in a Modified NAC-1 Cask

Assembly (PWR)	% Enrichment	Cool Time in Years for Burnups of 35 GWD/MTU	45 GWD/MTU	55 GWD/MTU
Westinghouse 15 x 15	5.1	2.25	3.00	3.50
Westinghouse 17 x 17	4.9	2.50	3.00	3.75
Westinghouse 17 x 17 OFA	4.7	2.25	2.75	3.25
Combustion Engineering 14 x 14	4.7	1.75	2.25	2.75
Combustion Engineering 16 x 16	4.7	2.25	2.75	3.25
Babcock & Wilcox 15 x 15	5.3	2.25	3.00	3.75
Babcock & Wilcox 17 x 17	5.1	2.50	3.00	4.00
Assembly (BWR)		**30 GWD/MTU**	**40 GWD/MTU**	**50 GWD/MTU**
General Electric 8 x 8 RP	> 5.00	1.00	1.25	1.50

3.0 NLI-1/2 Cask Evaluation

The NLI-1/2 cask is owned by NL Industries and operated by Nuclear Assurance Corporation. There are presently five(5) casks of the NLI-1/2 design. Certificate of Compliance No. 9010 was issued for the NLI-1/2 cask on September 3, 1974.

3.1 Cask Description

The NLI-1/2 shipping cask is a truck transported cask which has been designed to provide for two separate shipping configurations. One arrangement provides for a sealed inner container to house the spent fuel within the cask cavity. This allows the shipment of failed fuel with minimal cavity contamination. The second arrangement utilizes an open aluminum fuel basket to support the fuel within the cask cavity in place of the inner container. Both configurations have a double closure design (two separate closure heads). The overall arrangement of the cask is shown in Figure 3-1. Cask cross-sections of shipping configuration "A" (see Section 3.1.1.2) with PWR and BWR assemblies are shown in Figures 3-2 and 3-3, respectively.

The package as presented for shipment consists of the cask body, the optional inner container, an inner closure head, the outer closure head, and two impact structures, one bolted to each end of the cask. The cask body consists of inner and outer stainless steel shells which are joined by stainless steel forgings at each end to make a continuous weldment. The volume between the inner and outer cylinders contains a composite lead/uranium gamma shield. Neutron shielding is provided by a water jacket which surrounds the outer stainless steel cylinder and axially blankets the active fuel region of the fuel assembly. The internal cask cavity, which is 13.375 inches in diameter, has been sized to accommodate either the sealed inner container or the open fuel basket. Both are designed to carry either one PWR type or two BWR type fuel assemblies. The open end of the cask cavity is machined from a stainless steel forging. The length of the forging is such that it forms part of the cask cavity. Both the inner and outer closure seating surfaces are machined from this forging. This design also provides the opportunity to have all the necessary penetrations through the cask body pass through the solid stainless

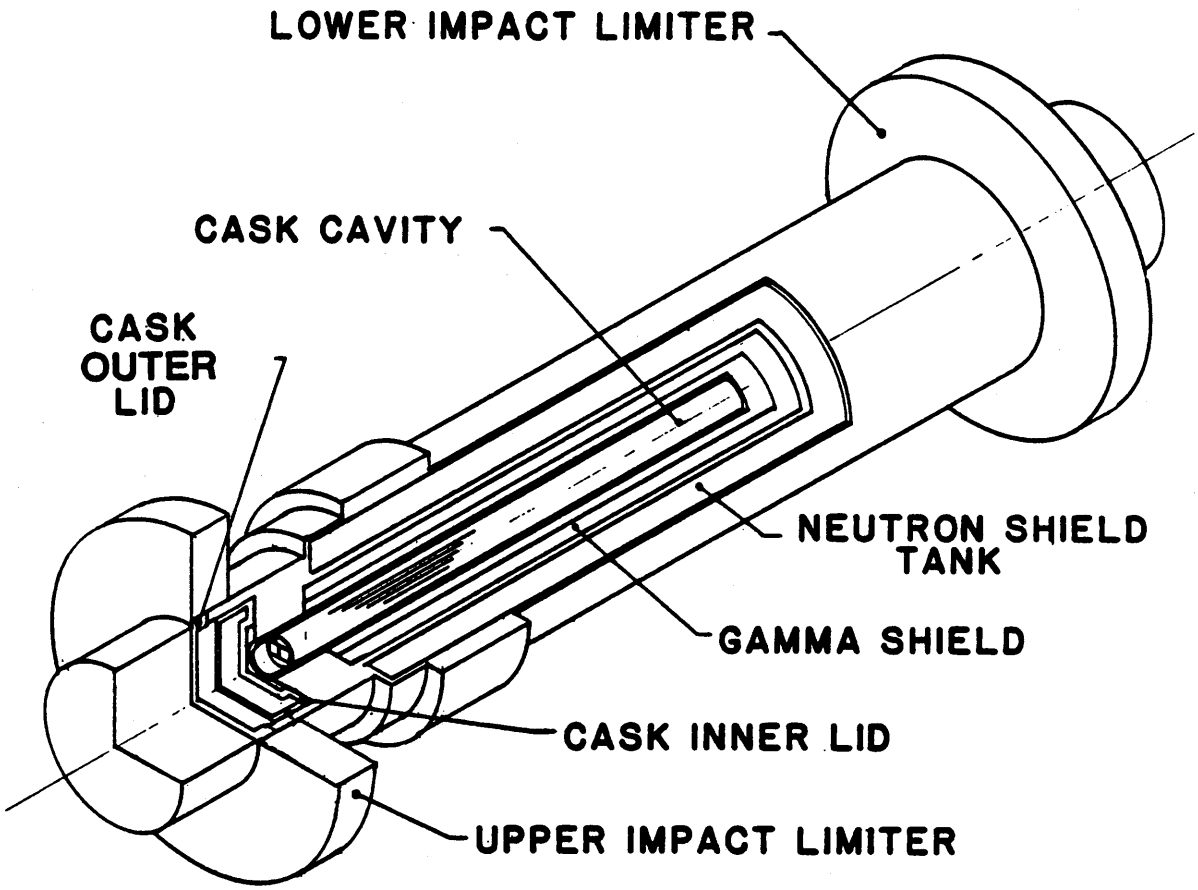

SPENT FUEL SHIPPING CASK
NLI 1/2

Figure 3-1. NLI-1/2 Spent Fuel Shipping Cask

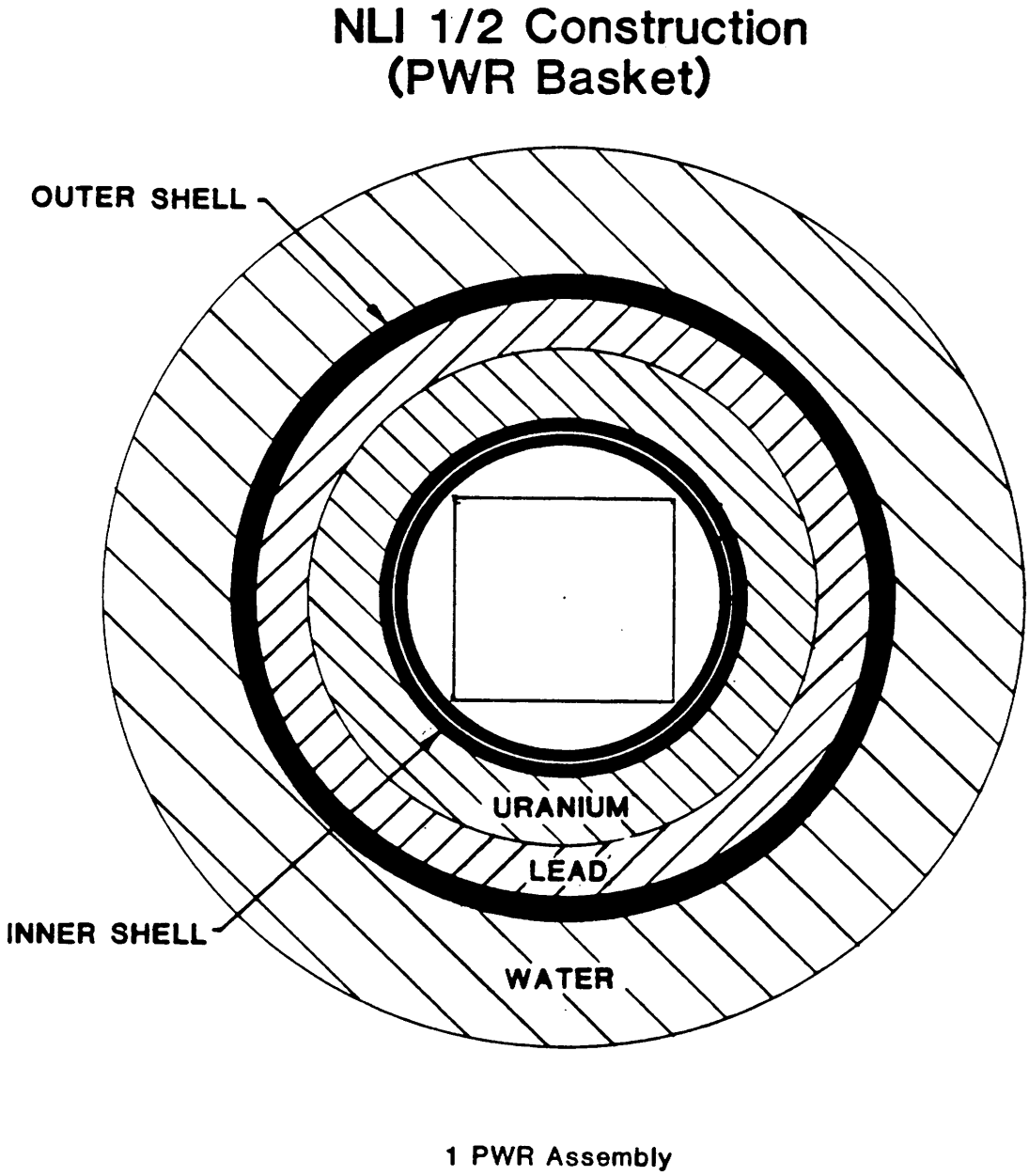

Figure 3-2. NLI-1/2 Cask Cross-Section, PWR Fuel

NLI 1/2 Construction
(BWR Basket)

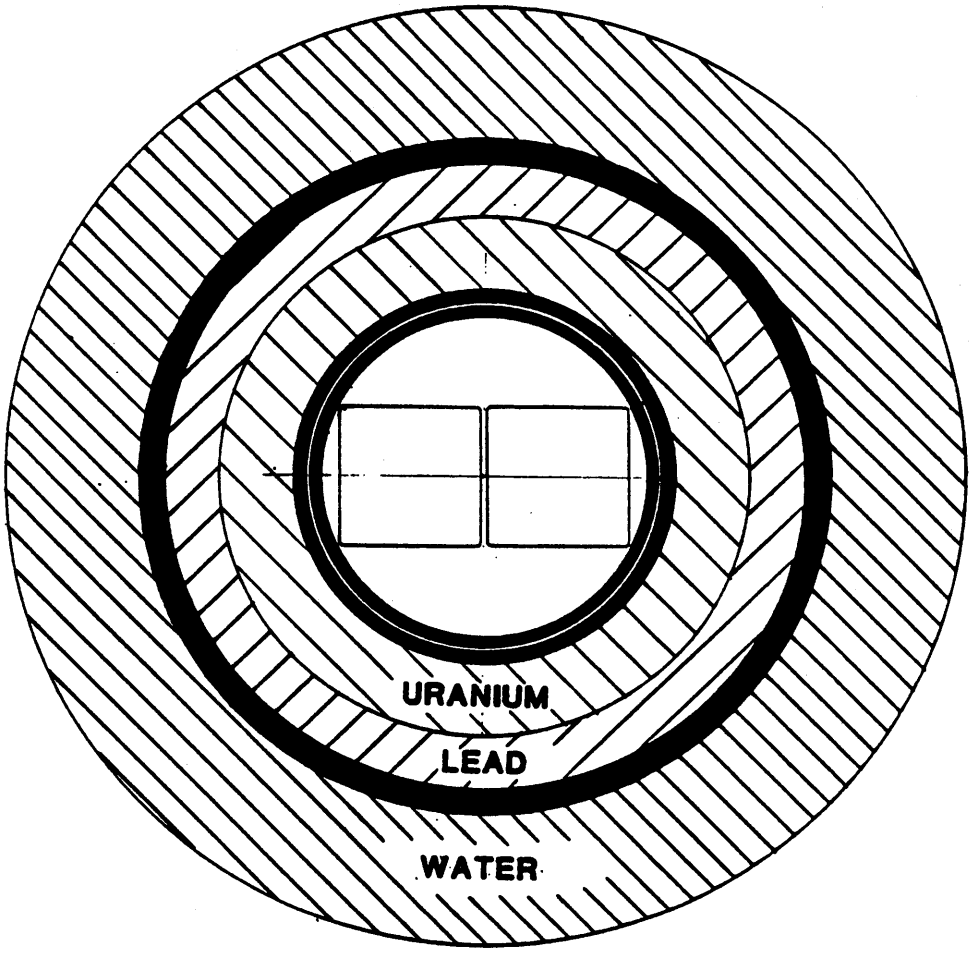

2 BWR Assemblies

Figure 3-3. NLI-1/2 Cask Cross-Section, BWR Fuel

steel forgings. The need for pipe and tube penetrations to pass thru the shielding materials and to penetrate the inner and outer shell compromising the integrity of the cask structure is thus eliminated. The open end forging also provides maximum protection of the inner closure head and the closure head seal. Lifting trunnions are located on the end forgings to eliminate the concern of a puncture of the containment by an impact on a trunnion.

3.1.1 Containment Boundary

There are two(2) shipping configurations for the NLI-1/2 cask designated as "A" and "B". Secondary containment for the cask remains the same for each configuration. It is the primary containment which changes with configuration. Configuration "A" for failed fuel will be discussed followed by Configuration "B".

3.1.1.1 Secondary Containment

There are two valved penetrations through the open end forging of the cask body. Both penetrations exit into the closure head cavity area and are outside the primary containment. These two penetrations are used to drain the captured closure head volume of water as the cask is removed from the spent fuel storage pool. Prior to shipment of the loaded cask, the penetrations are used to pressure test the secondary containment system. At each of these penetrations is a valved quick disconnect fitting. The fittings are constructed from 300 series stainless steel and have a pressure rating of 2000 psi (3/4" size). Each valve assembly is housed in a stainless steel valve box which is an integral part of the cask body. Each valve box has a gasketed cover which is bolted in place.

The outer closure head (secondary containment) is a stainless steel forging machined to form a cap. There are no penetrations through the outer closure head since all necessary service penetrations are made either through the open end forging or the inner closure head. The outer closure head is sealed by an elastomer O-ring and also serves as a rugged valve box cover for the service penetrations on the inner closure head.

3.1.1.2 Primary Containment - Configuration "A"

The inner container, which carries an aluminum fuel basket and the fuel, is a separate removable cylindrical can which is the primary containment for this configuration. This configuration is shown schematically in Figure 3-4. The inner container is designed to perform as a pressure vessel and consists of a 1/4 inch thick stainless steel shell. This shell is closed at one end by a flat stainless steel head which is machined to permit the head to be butt welded to the shell. The open end of the container is a stainless steel forged flange section machined to receive the inner closure head bolting arrangement. There are two service lines of 3/8 inch stainless steel tubing which extend the full length of the container and are placed inside the container. One line is the drain line used to evacuate the pool water from the inner container, and terminates at the center of the cavity bottom while the opposite end of the line is fitted with a flange machined to mate with the container closure head using an elastomer seal. The second service line is the suction drain line used to evacuate the pool water from the annulus between the outside of the inner container and the cask cavity. The line exits the top end of the container through a blind hole in the container flange. It is fitted with a heavy wall stainless steel tube which extends through the closure head and terminates with a quick disconnect fitting. The tube is outside of the primary seal area thereby maintaining the integrity of the inner container.

The inner closure head consists of a stainless steel forging, with a center section filled with uranium and covered by a stainless steel plate which is welded to the forging. The bulk of the required gamma shielding for the upper end of the cask is contained in the inner head closure to provide operator protection during the handling operations involving a loaded cask. The inner closure head is held in place by twelve high strength bolts and has a metallic O-ring type seal. It is equipped with two valved penetrations located between closure head bolts. These exit to the interior of the container on the underside of the closure head. One penetration mates with the suction drain line used to evacuate the inner container while the other penetration is used to back fill the inner container with helium. The valves for these lines are

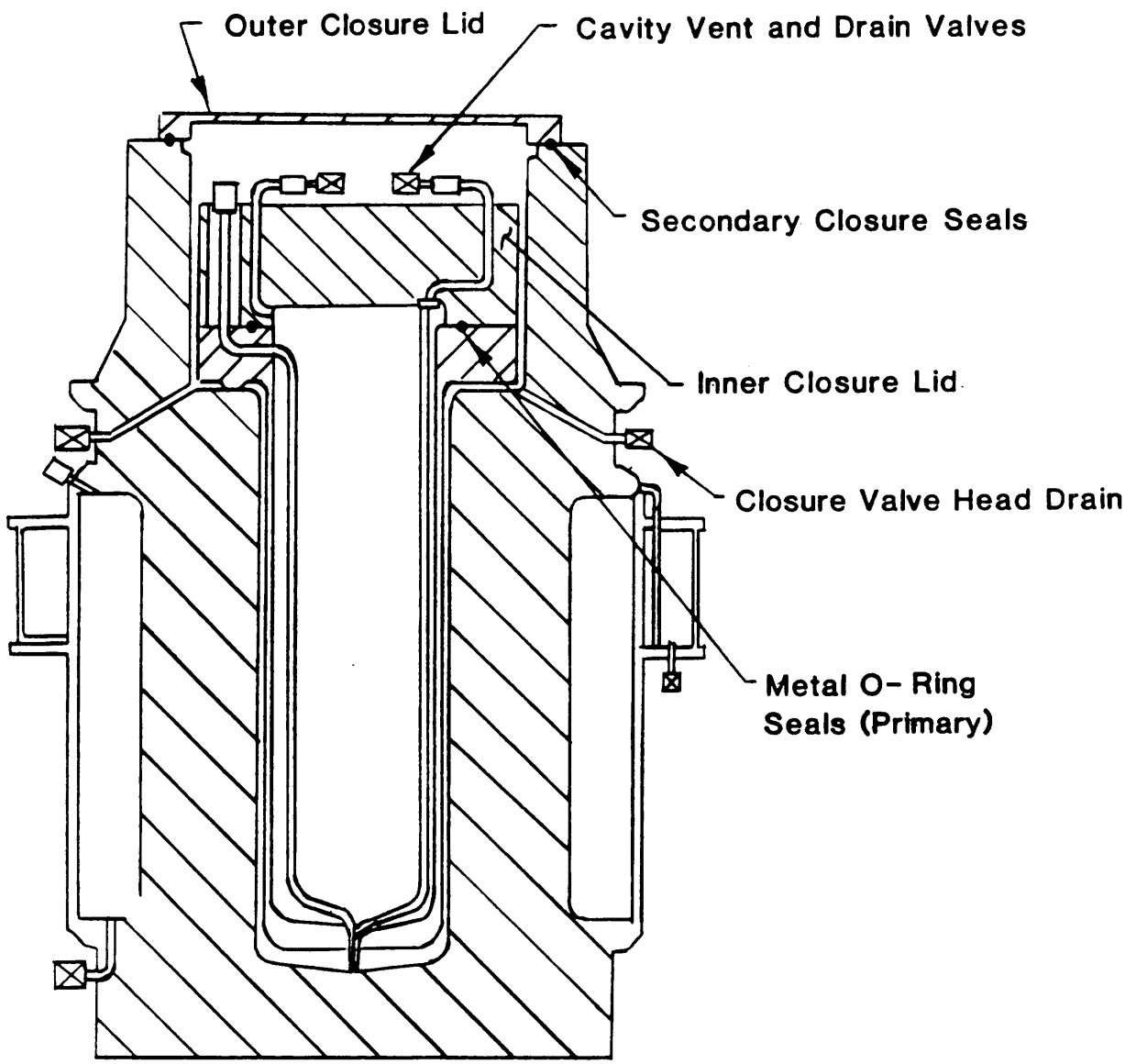

Figure 3-4. NLI-1/2 Cask Configuration "A", Schematic

designed for liquids and gases of radioactive, reactive or toxic nature, liquid metals and cryogenic service.

3.1.1.3 Primary Containment - Configuration "B"

The inner closure head used in shipping configuration "B" is of the same basic design as configuration "A" with the exception of the valve arrangement. The configuration "B" inner closure head has two penetrations as does the inner closure head for configuration "A". However, each penetration is fitted with a stainless steel block that is machined and welded to the top surface of the closure head. The block forms a closed passage from the head penetration to a tapped hole with a valved quick disconnect fitting attached. The block also provides a sealing surface for bolting a stainless steel cap fitted with double O-ring gaskets. The inner gasket is a metal O-ring type, Inconel X, self energizing seal. The outer gasket is an elastomer O-ring. The concentric O-ring seals provide an annulus into which air can be introduced for the purpose of checking seal integrity prior to each shipment. This configuration is shown schematically in Figure 3-5.

The fuel is supported in this configuration by an aluminum basket. The aluminum basket is made up of four pieces of aluminum approximately 150 inches long, each piece being shaped to form a segment of a circle with the internal flat face of each segment forming a square which supports the fuel for its entire length. The aluminum basket and fuel are supported axially by stainless steel weldments.

3.1.2 Shielding

Lead and depleted uranium are the effective gamma radiation shields in the cask wall while the water jacket on the outside of the cask moderates neutron radiation. The gamma radiation shields at the ends of the cask are made up entirely of uranium and steel. The lead/uranium shield in the cask body is arranged such that the cylinder of uranium is immediately adjacent to the inner cavity while the lead shielding fills the annulus between the uranium shield and the outer stainless steel wall.

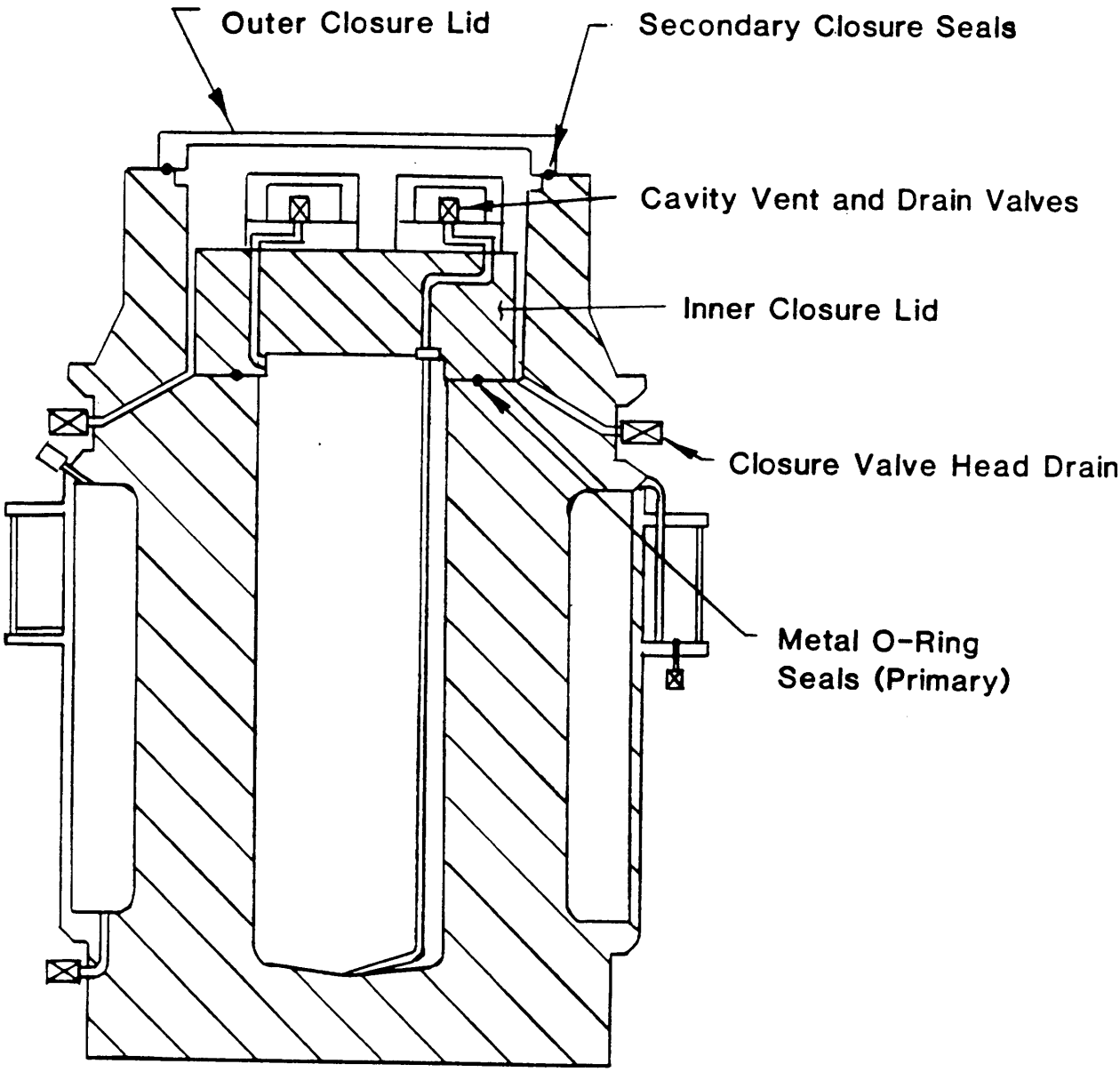

Figure 3-5. NLI-1/2 Cask Configuration "B", Schematic

The neutron shield water jacket is constructed of 1/4 inch high strength stainless steel. The water jacket design provides structural integrity under the normal conditions of transport as defined by 10 CFR 71 as well as to contribute to the overall strength of the cask in the hypothetical accident conditions. To maintain a solid water shield an expansion tank is provided in the form of a second water jacket which is welded to the outside of the neutron shield water jacket. The expansion tank has a vent and overflow line at the bottom of the tank, which terminates with a quick disconnect valved coupling or a pipe cap and relief valve set to relieve at 200 psig.

3.1.3 Heat Rejection

The NLI-1/2 cask has a passive heat rejection system. Heat from the assemblies is conducted through the cavity helium gas to the wall of the inner container (or cask wall, depending on configuration). From there, conduction is the major heat transfer mechanism moving heat to the outer shell. The neutron shield tank (through convection) then transfers heat to the outer surface. At this point natural convection and radiation dissipate the heat to the environment.

3.1.4 Impact Limiters

Impact structures are bolted to each end of the assembled shipping cask. These structures have been designed to soften the impact resulting from a 30 foot drop on an unyielding surface. They have a shape similar to that of a hat and are designed such that the kinetic energy of the system upon impact is spent in the progressive crushing of the impact structure. At the end of the impact there has been no contact made between any portion of the cask body and the impact surface. The impact limiter structure is constructed of balsa wood which is completed enclosed in an aluminum weldment.

3.1.5 Transportable Contents

Table 3-1 shows the maximum licensed parameter values for fuel transportable by the NLI-1/2 cask as stated in the Certificate of Compliance, Revision 7.

Table 3-1. Licensed Fuel Parameters for the NLI-1/2 Cask

Parameter	PWR	BWR
Maximum initial U content/assembly, kg	475	197
Maximum average initial U-235 enrichment, w/o	3.70	2.65
Maximum bundle cross section, inches	8.75	5.75
Fuel pin array size	14x14/15x15 16x16/17x17	7x7 8x8
Maximum active fuel length, inches	144	144
Maximum specific power, kW/kgU	40	27
Maximum average burnup, MWD/MTU	40,000	34,000
Minimum cooling time, days	150	120

3.2 Physical/Dimensional Evaluation

The NLI-1/2 cask is designed to carry one(1) PWR or two(2) BWR fuel assemblies. There are two configurations in which assemblies may be shipped, each having two baskets. The assembly envelope for these baskets is defined as 1) the length from the inside surface of the inner closure lid to the support plate for the assembly, 2) the cross-section dimensions for each assembly cavity, and 3) the total design weight for the fuel. These dimensions were taken from the NLI-1/2 SAR and associated licensing drawings, and are listed as Table 3-2 below.

Table 3-2. NLI-1/2 Assembly Envelopes

Configuration	Assembly Type	Envelope Length (in)	Envelope Side (in) x Side (in)	Fuel Design Weight (lb)
A	PWR	167	8.60 x 8.60	1600
	BWR	175.75	5.44 x 5.44	1600
B	PWR	173	8.88 x 8.88	1600
	BWR	176	5.75 x 5.625	1600

These envelopes were compared to the dimensional data presented in Section 7. The Combustion Engineering 16 x 16 will not fit in the NLI-1/2 cask in either configuration due to excessive assembly length. The General Electric 8 x 8 RP and Combustion Engineering 16 x 16 assemblies will require a revision to the Certificate of Compliance to change the active fuel length from 144 to 150 inches. All other assemblies examined are transportable in the NLI-1/2 cask with respect to weight and shape.

3.3 Criticality Evaluation

3.3.1 Existing Analyses

The NLI-1/2 criticality analysis in the SAR shows that the NLI-1/2 is capable of carrying the licensed enrichments of 3.7 w/o U-235 for PWR fuel and 2.65

w/o U-235 for BWR fuel. The SAR analyses were performed for lower enrichments than the enrichments required to reach the desired assembly-average burnups of 55,000 MWD/MTU for PWR and 50,000 MWD/MTU for PWR fuel. The SAR analyses indicate that the NLI-1/2 cask does not have substantial unused margin for higher enrichments.

3.3.2 New Analyses

The most reactive PWR assembly, the Westinghouse 17 x 17 OFA, was analyzed for criticality safety in the NLI-1/2 cask for the normal operation and hypothetical accident conditions. A criticality analysis was also performed for the GE 8 x 8 RP BWR assembly type. Additional analysis for each of the remaining six assembly types was performed to provide a basis for forming a determination of criticality limits.

3.3.3 Determination of Limits

The criticality results for the seven PWR and one BWR fuel types were evaluated to determine the intersection of the k-effective versus enrichment relationship with the 0.95 limit adopted by the NRC. This defines the maximum enrichment and associated burnup for each fuel type that can be carried in the NLI-1/2, as shown in Table 3-3. These results show that the NLI-1/2 does not have sufficient margin to allow the high initial U-235 enrichments required by high batch-average burnup PWR fuels. These results do not preclude the shipment of high burnup PWR fuels with initial enrichments of 3.7 w/o U-235 or less that have been driven to high burnups by other fuel assemblies in the core ("over-driven fuel") that maintain the critical chain-reaction. Burnup credit values have been calculated and appear in Table 3-3.

The results show that high burnup BWR fuel with high initial enrichment can be safely carried in the NLI-1/2 cask. The lower maximum enrichments permitted in the NLI-1/2 as compared to the NAC-1 are related to the depleted uranium gamma shielding of the NLI-1/2 which reduces neutron leakage from the fuel and raises k-effective. The NLI-1/2 can carry the initial enrichments required to achieve assembly average burnups of 45,000 MWD/MTU, as shown in Table 3-3, for the Babcock and Wilcox 15 x 15 assembly.

Table 3-3. Maximum Enrichments Transportable in the NLI-1/2 Cask

Assembly (PWR)	Maximum % Enrichment	Respective Burnup (GWD/MTU)	Required* % Enrichment	Minimum*** Burnup Required (GWD/MTU)
Westinghouse 15 x 15	4.0	43.5	4.8	6.0
Westinghouse 17 x 17	3.9	41	4.8	8.0
Westinghouse 17 x 17 OFA	3.7	40	4.7	9.0
Combustion Engineering 14 x 14	3.8	42	4.5	6.5
Combustion Engineering 16 x 16	3.8	41	4.7	7.5
Babcock & Wilcox 15 x 15	4.1	45	4.8	6.0
Babcock & Wilcox 17 x 17	3.9	40	5.1	11.0

Assembly (BWR)	Maximum % Enrichment	Respective Burnup (GWD/MTU)	Required** % Enrichment	Minimum*** Burnup Required (GWD/MTU)
General Electric 8 x 8RP	>5.0	>50	4.33	0

*Required enrichment to achieve burnups of 55,000 MWD/MTU in PWR fuel.

**Required enrichment to achieve burnups of 50,000 MWD/MTU in BWR fuel.

***Minimum burnup to reduce enrichment to transportable limits.

3.4 Shielding Evaluation

3.4.1 Existing Analyses

The NLI-1/2 SAR contains analyses of normal operation and hypothetical accident shielding that justify a maximum PWR fuel burnup of 40,000 MWD/MTU with a cool time of 150 days minimum and a maximum BWR fuel burnup of 34, 000 MWD/MTU and a minimum cool time of 120 days. The analyses performed in the SAR addressed both normal operation and hypothetical operation scenarios in a conservative fashion. The analysis results showed that the combined neutron and gamma limits of 10 mRem/hr at 6 feet from the personnel barrier for normal operation and 1000 mRem/hr at 3 feet from the cask surface for the hypothetical accident scenario will not be exceeded for the design burnup fuels.

3.4.2 New Analyses

Evaluation of the SAR shielding analysis showed that the original gamma shielding analysis was conservative. The neutron shielding analysis explicitly evaluated the axial flux peaking effect which increases the fuel midplane (radial) dose rate and decreases the cask end dose rates. A conservative factor of 1.25 was applied to fuel midplane dose rates but the associated 55% decrease at the cask ends was not applied. This does not prevent the cask from carrying the design basis fuel, but it would restrict the ability of the cask to carry high burnup fuels. A neutron transport analysis was performed to verify the 55% end dose decrease and this factor was applied in a modified shielding analysis. The SAR neutron shielding analysis also considered the neutron shield tank to have been entirely removed instead of just punctured as the structural analysis showed it would be. This resulted in a reduced distance from the fuel neutron source to the point at which the dose rate must be calculated with an associated rise in dose rates (3 feet from the outer structural cylinder instead of 3 feet from the cask surface). A radial neutron shielding calculation was performed to determine the dose rate at 3 feet from the cask surface in the hypothetical analysis of a punctured shield tank and the result was used in the modified shielding analysis. To keep doses As Low As Reasonably Achievable (ALARA), during

normal operation with high burnup fuels, the effect of adding 1.0 weight percent boron to the water in the neutron shield tank was calculated. This effect was included in the design recommendation analysis.

3.4.3 Determination of Limits

The original NLI-1/2 SAR shielding analysis was evaluated to determine the neutron and gamma dose rates per unit source strength for normal operation and hypothetical accident scenarios. This allowed the normal operation and hypothetical accident combined neutron and gamma dose rates to be determined for the cool times provided by Westinghouse. The resulting dose rate versus cool time was compared to the NRC limits to determine the minimum cool time for each assembly and burnup. The original configuration can carry 45,000 MWD/MTU burnup fuels at 150 days cool time but longer cooling period of up to 1.9 years are required for burnups of 55,000 MWD/MTU as shown in Table 3-4.

3.5 Heat Rejection Evaluation

3.5.1 Existing Analyses

The NLI-1/2 cask SAR thermal section was examined to determine the reported thermal analysis data. This data was used as a basis for the thermal evaluation. It was found that the maximum thermal load the cask may carry is 36,300 BTU/hr (10.6 kW). The maximum reported fuel pin temperature for normal conditions is 1013°F. The maximum cask surface temperature for the same conditions is 340°F.

Two models were used in the thermal analysis, both using the TRUMP computer code. A one-dimensional model was used to analyze the normal conditions. It was this model which provided data for the 1013°F maximum pin temperature. A two-dimensional model was used for the transient accident analysis. Data from this model was used to generate a comparison to the one-dimensional pin temperature. Using this data a maximum pin temperature of 860°F was postulated. The pin temperatures were calculated with the modified code, FETA.

Table 3-4. Minimum Cool Times for Transportable Assembles in the NLI-1/2 Cask With Respect to Shielding

	Cool Time for Burnups of		
Assembly (PWR)	35 GWD/MTU	45 GWD/MTU	55 GWD/MTU
Westinghouse 15 x 15	150 days	150 days	1.7 years
Westinghouse 17 x 17	150 days	150 days	1.9 years
Westinghouse 17 x 17 OFA	150 days	150 days	1.0 years
Combustion Engineering 14 x 14	150 days	150 days	240 days
Combustion Engineering 16 x 16	150 days	150 days	315 days
Babcock & Wilcox 15 x 15	150 days	150 days	1.9 years
Babcock & Wilcox 17 x 17	150 days	150 days	1.0 years
Assembly (BWR)	30 GWD/MTU	40 GWD/MTU	50 GWD/MTU
General Electric 8 x 8RP	150 days	150 days	150 days

The impact of decay heat on structure is very important to this cask. With the rated heat load, the lead gamma shield will partially melt during the fire accident. This reinforces the position that the thermal load imposed on casks by the extended burnup fuel must be equal to, or less than, the cask's rated heat load.

3.5.2 Determination of Limits

The decay heat limit for transportable fuel in the NLI-1/2 cask is 36,300 BTU/hr. This can be equated to 10.6 kw. The NLI-1/2 can carry one(1) PWR assembly or two(2) BWR assemblies. This places the assembly limits at 10.6 kW per assembly for PWR and 5.3 kW per assembly for BWR. With these limits set, the fuel data presented in Section 7.0 may be examined to determine what cool time must be obtained before shipment may occur. A list of the assembly types and respective cool times for the specific burnups to be evaluated appears as Table 3-5.

Models of the cask for use with HEATING5 were prepared and remain available for future licensing efforts.

3.6 Fission Gas Handling Evaluation

3.6.1 Existing Analyses

The present Safety Analysis Report for the NLI-1/2 cask shows three(3) leakage pathways from the cavity containment to the environment. These are the inner closure head seal and two(2) valve covers on the vent and drain valves. The analysis shows a leak rate of 1.79×10^{-5} atm cm^3/sec into the outer head cavity (also sealed) for normal operating conditions. For the accident scenario with the presently licensed fuel the activity leakage rate is 0.15 curies/week.

3.6.2 New Analyses

There is only one(1) medium for radionuclide transport across the containment boundary, namely helium contaminated by gaseous fission by-products. The

Table 3-5. Minimum Cool Time for Transportable Assemblies in the NLI-1/2 Cask With Respect to Decay Heat

	Cool Time for Burnups of		
Assembly (PWR)	35 GWD/MTU	45 GWD/MTU	55 GWD/MTU
Westinghouse 15 x 15	150 days	210 days	270 days
Westinghouse 17 x 17	150 days	210 days	270 days
Westinghouse 17 x 17 OFA	150 days	180 days	210 days
Combustion Engineering 14 x 14	150 days	150 days	150 days
Combustion Engineering 16 x 16	150 days	210 days	270 days
Babcock & Wilcox 15 x 15	150 days	210 days	270 days
Babcock & Wilcox 17 x 17	180 days	240 days	300 days
Assembly (BWR)	30 GWD/MTU	40 GWD/MTU	50 GWD/MTU
General Electric 8 x 8 RP	150 days	150 days	150 days

thirty-foot fall will release the fission gas and helium trapped inside the assembly fuel rods. No credit for the outer closure head seal was taken. The additional pressure was added to the maximum cavity pressure, the cavity contamination concentrations were calculated, and a new rate of release generated. The present configurations of the NLI-1/2 cask limit fission gas release to a maximum of 0.208 curies/week. This is within the present 1000 curie release limit specified in 10 CFR 71.

This analysis was conducted using the highest burnup for each assembly at a 150 day cool time. Since these assemblies contain the maximum fission gas produced and since the cask retains these gases within the allowable release rate limit, the NLI-1/2 cask is unrestricted from the standpoint of fission gas handling in the transportation of the extended burnup fuel assemblies in question.

3.7 Combined Results

Each of the limiting criteria presented in the preceding sections addressed a single criteria. This section examined all the cases to present a single combined set of enrichment and cool time limits for extended burnup fuel shipment in the NLI-1/2 cask.

No single factor may be singled out as the most limiting. Criticality, shielding, and heat rejection all limit some portions of the assembly types and burnups. The effects of this are seen in Table 3-6 which shows the combined results for the separate criteria evaluations.

3.8 Design Modification Recommendations

The previous section presented the combined limiting values for transporting extended burnup fuel assemblies in the existing licensed design for the NLI-1/2 cask. This section describes the available design options for improving the ability of the NLI-1/2 cask to transport extended burnup fuel assemblies and a design modification is recommended.

Table 3-6. Combined Transportable Limits for Extended Burnup Fuels in the NLI-1/2 Cask

Assembly (PWR)	% Enrichment	Cool Time in Years for Burnups of 35 GWD/MTU	45 GWD/MTU	55 GWD/MTU
Westinghouse 15 x 15	4.0	150 days	210 days	1.70 years
Westinghouse 17 x 17	3.9	150 days	210 days	1.90 years
Westinghouse 17 x 17 OFA	3.7	150 days	180 days	365 days
Combustion Engineering 14 x 14	3.8	150 days	150 days	240 days
Combustion Engineering 16 x 16	----------Not Carried by the NLI-1/2-------			
Babcock & Wilcox 15 x 15	4.1	150 days	210 days	1.90 years
Babcock & Wilcox 17 x 17	3.9	180 days	240 days	365 days
Assembly (BWR)	**% Enrichment**	**30 GWD/MTU**	**40 GWD/MTU**	**50 GWD/MTU**
General Electric 8 x 8 RP	>5.0	150 days	150 days	150 days

3.8.1 Design Options

The limiting criteria for criticality, shielding, heat rejection, fission gas handling, and physical/dimensional interface were examined to determine the applicability of design optimization. The heat rejection capability of the NLI-1/2 cask is in a practical sense fixed due to the existing configuration of the cask wall. There is no restriction on transportability from the fission gas handling ability of the cask. The cask cavity (too short for the Combustion Engineering 16 x 16) can not be easily lengthened by re-design of the inner closure heads. The criticality of the cask contents is the greatest limitation on transportability since it precludes shipment of all 55,000 MWD/MTU and 45,000 MWD/MTU burnup assemblies. The neutron shielding can be improved by adding a neutron absorber to the shield tank fluid. This would reduce the coupled neutron and gamma dose rate to levels acceptable for transport.

3.8.2 Design Recommendation

There is one(1) design recommendation to be made for the NLI-1/2 cask, adding boron to the shield tank water to a concentration of 1.0 %. This design change requires no physical modification of the cask structure. This addition reduces the cool times required to ship 55,000 MWD/MTU fuel assemblies as shown in Table 3-7. The criticality restrictions on 55,000 MWD/MTU and 45,000 MWD/MTU fuel burnups can be removed by the use of burnup credit. If burnup credit is allowed, the actual discharge enrichment of the fuel (including the effect of plutonium provided by neutron capture in U-238) can be used instead of the initial fuel enrichment.

Recently the Certificate of Compliance for the NLI-1/2 casks was modified to allow shipment of PWR fuels with burnups up to 56,000 MWD/MTU, if the neutron shield tank is borated.

Table 3-7. Combined Transportable Limits for Extended Burnup Fuels in a Modified NLI-1/2 Cask

Assembly (PWR)	% Enrichment	Minimum* Burnup Required (GWD/MTU)	Cool Time for Burnups of 35 GWD/MTU	45 GWD/MTU	55 GWD/MTU
Westinghouse 15 x 15	4.0	6.0	150 days	210 days	270 days
Westinghouse 17 x 17	3.9	8.0	150 days	210 days	270 days
Westinghouse 17 x 17 OFA	3.7	9.0	150 days	180 days	210 days
Combustion Engineering 14 x 14	3.8	6.5	150 days	150 days	150 days
Combustion Engineering 16 x 16	----------Not Carried by the NLI-1/2----------				
Babcock & Wilcox 15 x 15	4.1	6.0	150 days	210 days	270 days
Babcock & Wilcox 17 x 17	3.9	11.0	180 days	240 days	300 days

Assembly (BWR)	% Enrichment	Minimum* Burnup Required (GWD/MTU)	30 GWD/MTU	40 GWD/MTU	50 GWD/MTU
General Electric 8 x 8 RP	>5.00	0	150 days	150 days	150 days

*Minimum burnup required to reduce enrichment to transportable limits

4.0 NLI-10/24 Cask Evaluation

The NLI-10/24 cask is owned by NL Industries and operated by Nuclear Assurance Corporation. There are currently two(2) casks of the NLI-10/24 design. Certificate of Compliance No. 9023 was issued for the NLI-10/24 cask on June 11, 1976.

4.1 Cask Description

The NLI-10/24 shipping cask has been designed to provide double containment of either intact or failed assemblies. The package as presented for shipment consists of the cask body, a fuel basket, the cask cavity inner closure head, the cask body closure head (outer closure head), and impact structures attached to each end of the cask. Portions of the package are shown in Figure 4-1 with cross sections of the cask with PWR and BWR baskets shown in Figures 4-2 and 4-3, respectively.

The cask body consists of inner and outer stainless steel shells which are joined by stainless steel forgings at each end to make a continuous weldment with the volume between the inner and outer cylinders filled by lead. A neutron shield water jacket surrounds the outer stainless steel cylinder and blankets the active fuel region of the fuel assembly. Separate baskets are designed to carry either 10 PWR type or 24 BWR type fuel assemblies. The open end of the cask cavity is machined from a stainless steel forging which forms part of the cask cavity. This design provides the necessary material from which the two closure head flange seating surfaces can be machined. The open end forging provides maximum protection to the inner and outer closure heads and seals. The cask lifting trunnions are located on the end forgings eliminating the concern of a puncture of the containment by an impact on a trunnion.

Each of the fuel baskets is constructed from aluminum castings 45 inches in diameter and covers the active length of the PWR and BWR fuel. Axial channels are located in the casting to accept individual fuel assemblies. Criticality control is achieved by means of a box structure which lines the fuel channel

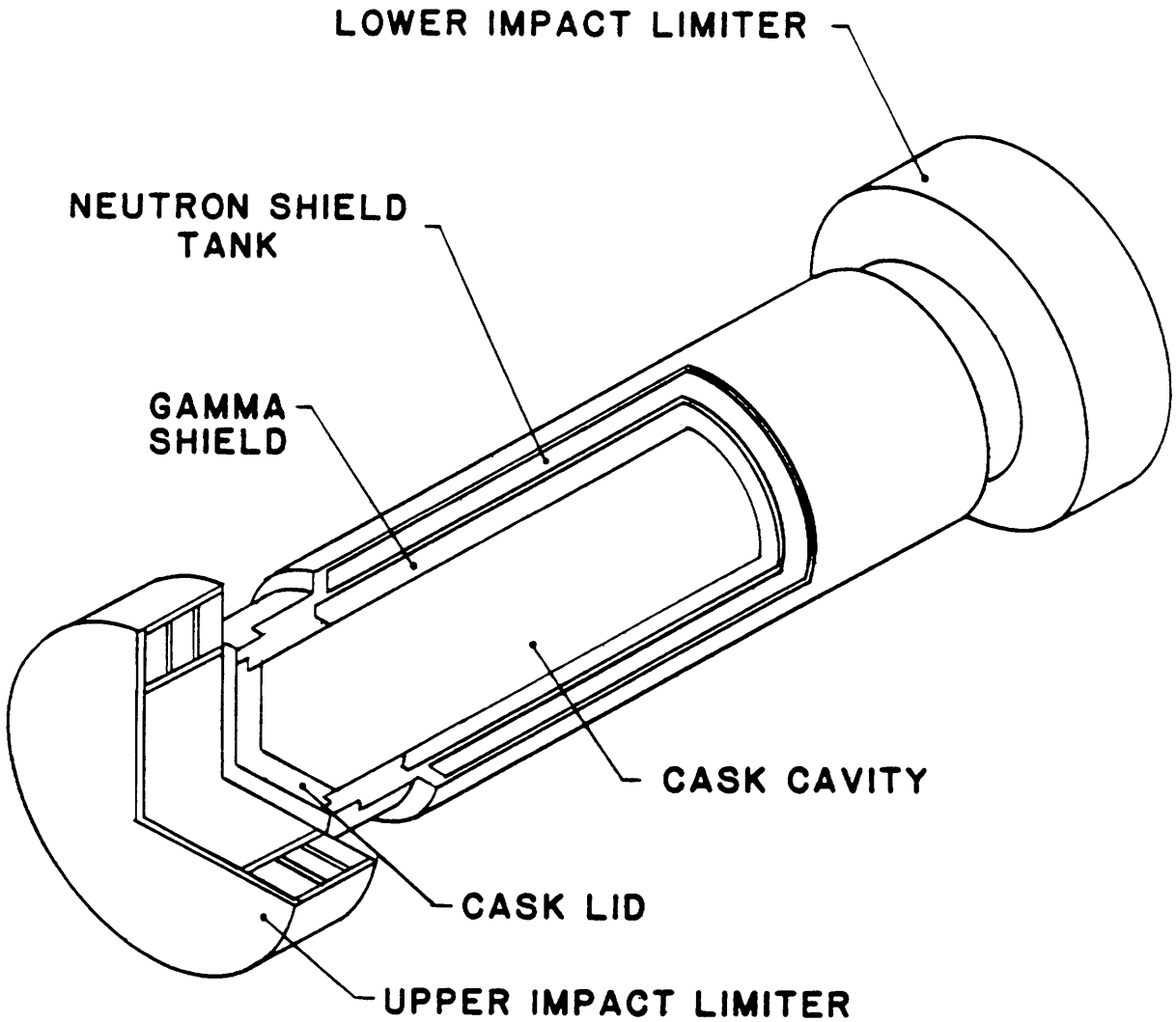

SPENT FUEL SHIPPING CASK
NLI 10/24

Figure 4-1. NLI-10/24 Spent Fuel Shipping Cask

NLI 10/24 Construction (PWR Basket)

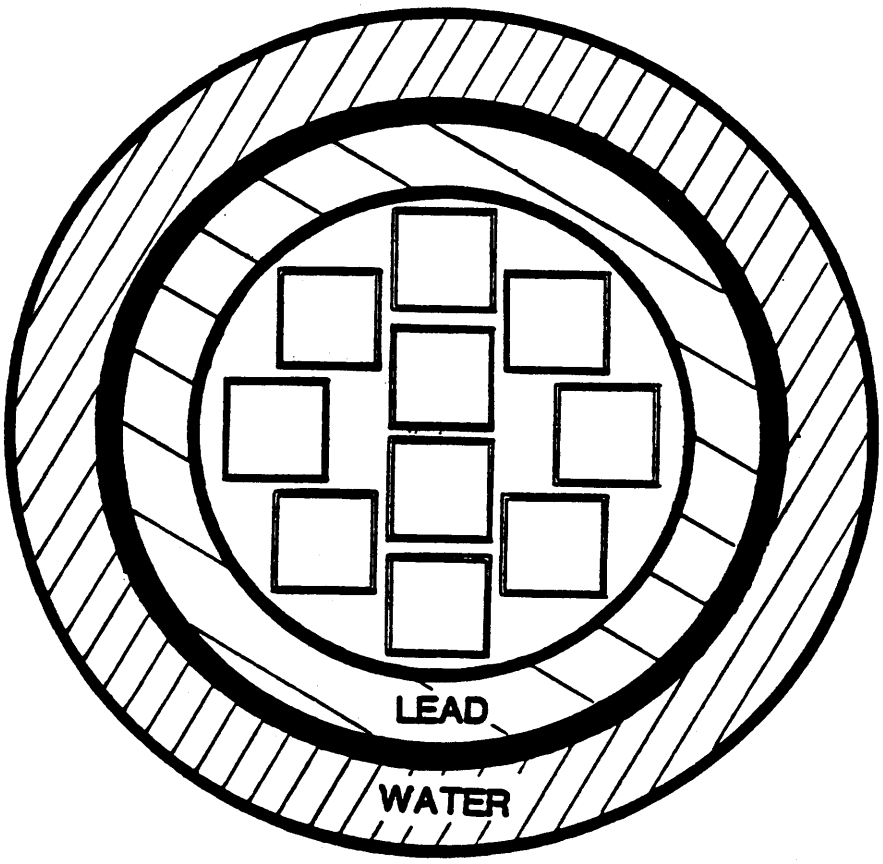

10 PWR Assemblies

Figure 4-2. NLI-10/24 Cask Cross-Section, PWR Fuel

NLI 10/24 Construction (BWR Basket)

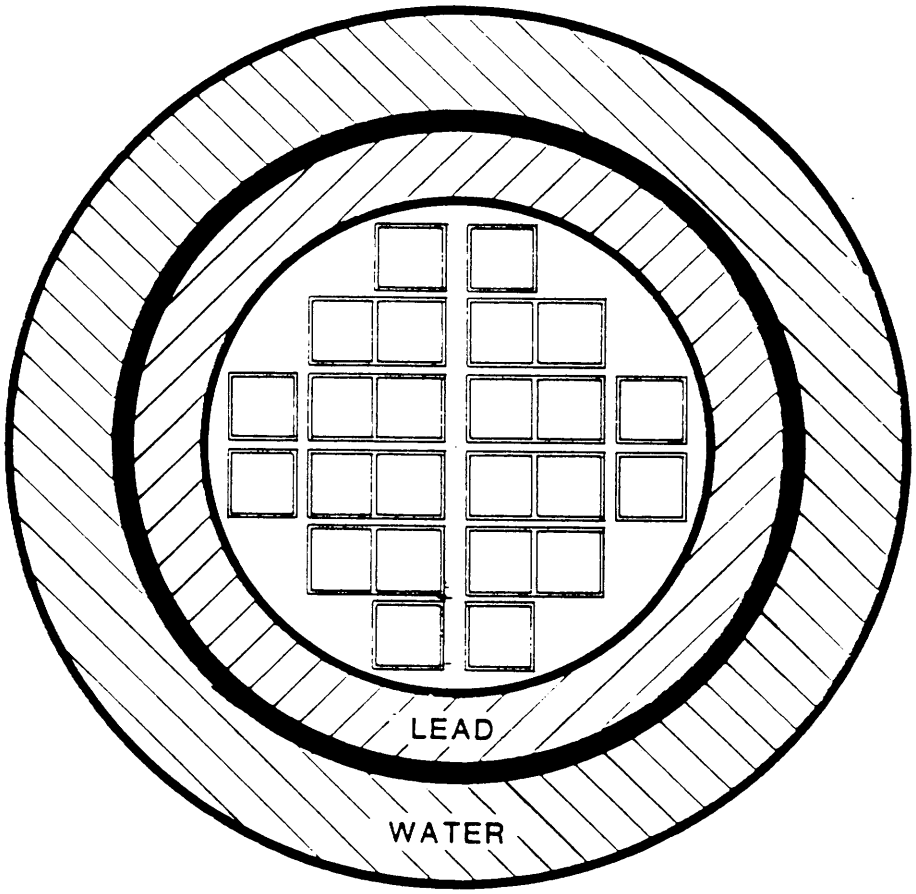

24 BWR Assemblies

Figure 4-3. NLI-10/24 Cask Cross-Section, BWR Fuel

openings in the aluminum basket. The box is constructed of plate material consisting of Ag-In-Cd in a 304 stainless steel sandwich. The box structures are supported at both ends by means of a stainless steel plate to form a rigid structure independent of the aluminum basket.

4.1.1 Containment Boundary

There is one penetration through the head end forging of the cask body that exists into the cavity area between the inner and outer closure heads and is outside the primary containment seal area. This penetration is used to drain the area between the inner and outer closure heads as the cask is removed from the spent fuel storage pool. The penetration is also used to pressure test the outer closure head seal prior to shipment of the loaded cask. A threaded connection located within a recess in the head end forging terminates the penetration with a bolted and gasketed closure plate isolating the penetration from the ambient. The cask body closure head (outer closure head) is a flat stainless steel plate 2-1/2 inches thick. With no penetrations since the single necessary service penetration is made through the cask body end forging. The outer closure head, which is an additional containment boundary, also serves as a rugged valve box cover for the two service penetrations in the inner closure head cask flange. Viton or silicone O-rings are used for the outer closure head seal.

The cask cavity closure head (inner closure head) consists of a stainless steel forging, the center section of which is filled with uranium which is covered by a stainless steel plate welded to the forging. The bulk of the required upper end gamma shielding is contained in the inner head to provide operator protection during handling operations when the cask is loaded. The closure head is held in place by 16 high strength bolts. The inner closure head seal is a metallic O-ring which is more than adequate to withstand the temperatures expected as a result of the hypothetical fire accident. Two penetrations in the inner closure head cask flange are used for venting and draining the cask cavity. These penetrations are equipped with 1-1/2 inch valved quick disconnect fittings and are housed in a valve box which is bolted to the cask flange. The metal O-ring seals in the valve box arrangement

provide the pressure boundary for the primary containment system along with the cavity wall material.

4.1.2 Shielding

Neutron shielding is provided by a water jacket constructed of 3/4 inch stainless steel. The water jacket design was developed to provide structural integrity and resistance to penetration under normal conditions of transport as well as to contribute to the overall strength of the cask under hypothetical accident conditions. Expansion tanks are provided in order to maintain a solid water shield. Gamma shielding is provided by the lead filling the volume between the inner and outer shells.

4.1.3 Heat Rejection

The aluminum basket serves as a heat conduction path from each individual fuel assembly to the cask cavity wall. Decay heat is removed from the cavity wall by means of cooling water circulated through channels welded to the outside surface of the inner shell. When the cooling system is not operating, heat dissipation from the inner shell occurs by conduction through the lead and outer shell, natural convection in the shield tank, and convection and radiation to the environment from the finned outer surface of the water shield jacket. For analysis purposes the cooling system is assumed to be inoperable.

4.1.4 Impact Limiters

Impact limiting structures are integrated into the tie-down structure at each end of the cask. The impact limiter system is a cylinder of balsa wood encased between aluminum shells and is mounted on the ends of the cask to provide protection from impact. The impact limiters are designed such that upon impact the kinetic energy of the system is spent in the progressive crushing of the impact structure. At the end of the impact, there has been no contact made between any portion of the cask body and the impact surface.

4.1.5 Transportable Contents

Table 4-1 shows the maximum licensed parameter values for fuel transportable by the NLI-10/24 cask as stated in the Certificate of Compliance, Revision 2.

4.2 Physical/Dimensional Evaluation

The NLI-10/24 cask is designed to carry ten(10) PWR and twenty-four(24) BWR fuel assemblies. There are two(2) fuel baskets, one for PWR fuel and one for BWR fuel. The basket's assembly envelope is defined by 1) the length from the inside surface of the lid to the assembly support plate at the bottom of the basket, 2) the cross-section dimensions for each assembly cavity, and 3) the total design weight for the fuel. These dimensions were taken from the SAR and associated licensing drawings and are listed in Table 4-2.

Table 4-2. NLI-10/24 Assembly Envelopes

Assembly Type	Envelope Length (in)	Envelope Side (in) x Side (in)	Fuel Design Weight (lb)
PWR	175.4	8.956 x 8.956	1800/assembly
BWR	176.5	5.775 x 5.775	1800/assembly

Spacers are provided in the cask to facilitate control of assembly motion in the basket. These spacers are made to "as necessary" lengths to restrict fuel movement during transport. The envelope length will be adjusted down to fit each assembly type as necessary without the necessity of a license revision.

The assembly envelopes were compared to the fuel physical data in Section 7. The Combustion Engineering 16 x 16 and the General Electric 8 x 8 RP will not fit into the NLI-10/24 due to the length of the licensed fuel basket designs. The full cavity length, if utilized, would accommodate both fuel designs. A revision to the Certificate of Compliance would also be required to account for the 150 inch active fuel length of the two assemblies. All other assemblies examined are transportable based upon shape and weight.

Table 4-1. Licensed Fuel Parameters for the NLI-10/24 Cask

Parameter	PWR	BWR
Maximum initial U content/assembly, kg	475	200
Maximum average initial U-235 enrichment, w/o	3.5	2.8
Maximum bundle cross section, inches	9.0	5.75
Fuel pin array size	14x14/15x15 16x16/17x17	7x7/8x8
Maximum active fuel length, inches	144	144
Maximum specific power, kW/kgU	40	27
Maximum average burnup, MWD/MTU	35,500	29,700
Minimum cooling time, days	150	150

4.3 Criticality Evaluation

4.3.1 Existing Analyses

The NLI-10/24 SAR criticality analyses show that the NLI-10/24 cask can carry the licensed enrichments of 3.5 w/o U-235 for PWR fuel and 2.8 w/o U-235 for BWR fuel. The fuel baskets of this cask have been designed with a Ag-In-Cd neutron absorber in order to carry the design basis BWR and PWR fuels. The SAR criticality analyses indicate that very little margin exists to allow higher initial enrichment fuels to be carried in this cask.

4.3.2 New Analyses

The most reactive PWR assembly, the Westinghouse 17 x 17 OFA, was analyzed for criticality safety in the NLI-10/24 cask for a full load of 10 PWR assemblies and a partial load of 8 assemblies. Analysis shows that partial loads reduce k-effective for a given fuel enrichment at the cost of reduced payload. A full load of 24 General Electric 8 x 8RP BWR assemblies and a partial load of 20 assemblies were also analyzed. Additional analysis was performed for the remaining six fuel types to complete the evaluation data set. The configurations which were used in the analysis of PWR and BWR partial loadings are shown in Figures 4-4 and 4-5, respectively.

4.3.3 Determination of Limits

A k-effective versus enrichment relationship for the all seven PWR fuel types and the one BWR fuel type was obtained. The maximum enrichments for each fuel type are shown in Table 4-3. These results show that the NLI-10/24 cask cannot carry a full 10 assembly PWR fuel load at the enrichments required to achieve 55,000 MWD/MTU assembly-average burnup. The cask can carry a partial load of 8 PWR assemblies at the enrichment required to achieve 55,000 MWD/MTU as shown in Table 4-3. Burnup credit for the assembly types has been calculated and included in the referenced table.

A full load of 24 BWR assemblies at the enrichment required to reach 50,000 MWD/MTU burnup cannot be carried, but a partial load of 20 assemblies is acceptable.

NLI 10/24 PWR BASKET

8 Assembly Loading Pattern With 2 Empty Center Positions

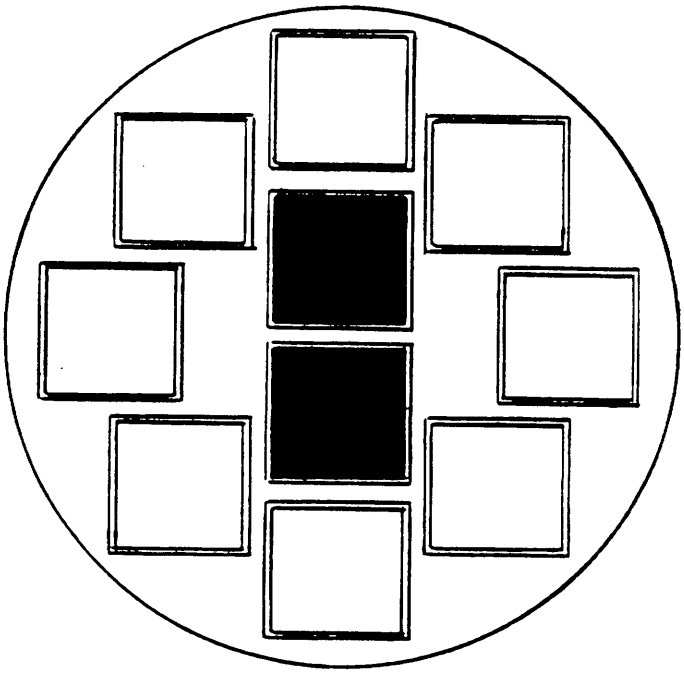

Figure 4-4. NLI-10/24 PWR Partial Loading Pattern

NLI 10/24 BWR Basket
20 Assembly Loading Pattern
With 4 Empty Center Positions

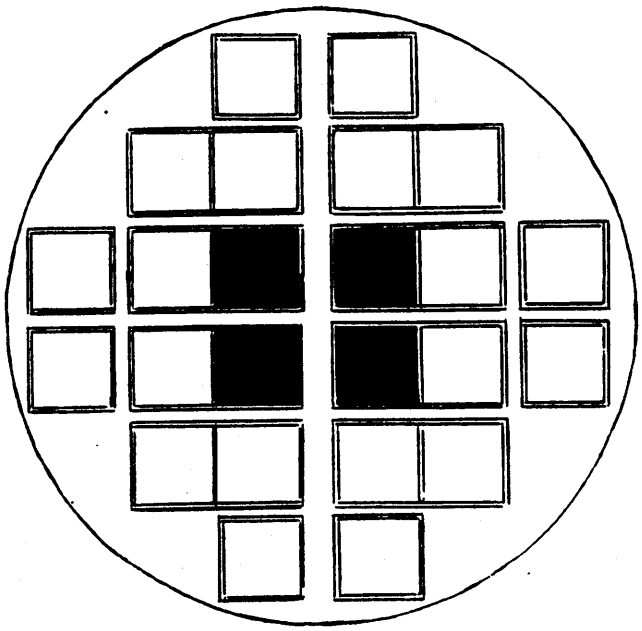

Figure 4-5. NLI-10/24 BWR Partial Loading Pattern

Table 4-3. Maximum Enrichments Transportable in the NLI-10/24 Cask

Assembly (PWR)	10 Assemblies				8 Assemblies	
	% Enrichment	Respective Burnup (GWD/MTU)	% Enrichment Required*	Minimum*** Burnup Required (GWD/MTU)	% Enrichment	Respective Burnup (GWD/MTU)
Westinghouse 15 x 15	4.54	48.5	4.8	2	5.35	63
Westinghouse 17 x 17	4.36	44	4.8	4	5.1	60
Westinghouse 17 x 17 OFA	4.22	44	4.7	5	4.85	58
Combustion Engineering 14 x 14	4.25	47	4.5	3	4.9	64
Combustion Engineering 16 x 16	4.28	45	4.7	3	4.9	58.5
Babcock & Wilcox 15 x 15	4.75	50.5	4.8	1	5.55	>65
Babcock & Wilcox 17 x 17	4.47	47	5.1	5.5	5.25	57

Assembly (BWR)	24 Assemblies				20 Assemblies	
Assembly (PWR)	% Enrichment	Respective Burnup (GWD/MTU)	% Enrichment Required**	Minimum*** Burnup Required (GWD/MTU)	% Enrichment	Respective Burnup (GWD/MTU)
General Electric 8 x 8 RP	3.3	35	4.33	9	4.6	>50

*Required enrichment to achieve burnups of 55,000 MWD/MTU for PWR fuel.
**Required enrichment to achieve burnups of 50,000 MWD/MTU for BWR fuel.
***Minimum burnup required to reduce enrichment to transportable limits for full loads.

4.4 Shielding Evaluation

4.4.1 Existing Analyses

The NLI-10/24 SAR contains analyses of normal operation and hypothetical accident shielding that justify a maximum PWR burnup of 35,500 MWD/MTU and a maximum BWR burnup of 29,700 MWD/MTU, both with a required cool time of 150 days. The SAR analysis results showed that the NRC limits of 10 mRem/hr at 6 feet from the personnel barrier in normal operation and at 3 feet from the cask surface in a hypothetical accident will not be exceeded for the design burnup fuels.

4.4.2 New Analyses

Evaluation of the NLI-10/24 shielding analysis shows that no modification of the gamma shielding was required but that the neutron shielding was not sufficient for shipment of a full load of high burnup fuel assemblies with 150 days cool time. As with the NLI-1/2, the effect of axial flux peaking was added to the fuel midplane dose rate but the associated 55% decrease at the cask ends was not applied. Again, as for the NLI-1/2, the 3/4 inch stainless steel neutron shield tank wall was neglected in the hypothetical accident analysis resulting in conservatively calculated dose rates at 3 feet from the outer structural cylinder compared to what would be expected for the actual cask. Analyses were performed to re-verify the 55% conservatism in the cask end dose rates due to axial flux peaking and the hypothetical accident fuel mid plane dose rate. The possibility of adding boron to the neutron shield tank was considered and a decrease in fuel midplane dose rates of 10.7% would result. However, the limiting factors are the axial doses for the hypothetical accident scenario which boration of the cask shield tank would not affect. Hence, the effect of boron was not included in the final shielding analysis.

4.4.3 Determination of Limits

The original SAR analysis with the modifications noted above to the neutron shielding analysis was evaluated to determine the neutron and gamma dose rates

per unit source strength for normal operation and hypothetical accident scenarios. This allowed the normal operation and hypothetical accident combined neutron and gamma dose rates to be determined for the source versus cool times provided by Westinghouse. The resulting dose rate versus source strength was compared to the NRC limits to determine the minimum cool time for each assembly and burnup. The NLI-10/24 cask can carry full loads of 45,000 MWD/MTU burnup PWR fuels at 150 days but longer periods of up to 1.4 years are required for burnups up to 55,000 MWD/MTU. The BWR fuel can be carried at a burnup of 50,000 MWD/MTU after 150 days cool time. The resulting cool time limits for shielding full loads of assemblies are presented in Table 4-4.

4.5 Heat Rejection Evaluation

4.5.1 Existing Analyses

The NLI-10/24 Cask SAR was examined for reported thermal analysis data. It is this data which was used as a basis for the thermal evaluation. The cask decay heat load is 70 kw. The maximum pin temperature calculated for PWR fuel is 900°F with the BWR maximum pin temperatures predicted as 724°F. The cask outer surface temperature will be 324°F during steady-state conditions. The ANSYS computer code was used to model the PWR basket and cask in cross-section at mid-fuel. The BWR basket was shown thermally equivalent to the PWR basket and thus acceptable. No material melting occurs during the thermal accident. An auxiliary cooling system is used during normal transport but was not included in the analysis.

4.5.2 New Analyses

Models of the PWR basket were made using HEATING5. These models were analyzed under normal operating conditions and the results were compared to the SAR reported values. Once the reported temperature distribution for the basket was predictable using the HEATING5 models, the analysis of the extended burnup assembly shipments was begun.

If a complete load of 10 maximum burnup, minimum cool time PWR assemblies were placed in the cask, the cask's heat load would be 156 kw, far in excess of the

Table 4-4. Minimum Cool Times for Transportable Assemblies in the NLI-10/24 Cask with Respect to Shielding

	Cool Time for Burnups of		
Assembly (PWR)	35 GWD/MTU	45 GWD/MTU	55 GWD/MTU
Westinghouse 15 x 15	150 days	150 days	355 days
Westinghouse 17 x 17	150 days	150 days	1.4 years
Westinghouse 17 x 17 OFA	150 days	150 days	205 days
Combustion Engineering 14 x 14	150 days	150 days	1.25 years
Combustion Engineering 16 x 16	150 days	150 days	150 days
Babcock & Wilcox 15 x 15	150 days	150 days	1.4 years
Babcock & Wilcox 17 x 17	150 days	150 days	150 days
Assembly (BWR)	30 GWD/MTU	40 GWD/MTU	55 GWD/MTU
General Electric 8 x 8 RP	150 days	150 days	150 days

70 kw limit. This means that the extended burnup fuel must cool longer, or partial loads must be shipped. Partial loadings or longer cool times of BWR fuel are required for similar reasons.

The problem of partial loadings with minimum cool time fuel was examined through analysis of the basket models. These models were modified to show the affects of the fewer number of assemblies at higher decay heat loads. For the worst case PWR partial loading the maximum fuel pin temperature was 1074°F. For the worst case loading of BWR fuel the maximum pin temperature is 774°F. Table 4-5 shows the maximum number of minimum cool time assemblies which can be transported (from the standpoint of heat rejection) in the NLI-10/24 cask.

4.5.3 Determination of Limits

Once partial loadings of the cask were shown to be acceptable, a determination of the minimum cool time required to ship a full load of the same type assemblies with uniform burnup was made. This has been done by comparing the cool time for each assembly burnup to the maximum average decay heat value for shippable assemblies. The maximum average decay heat of a transportable assembly (assuming a full load of assemblies) is 7 kw for PWR assemblies and 2.9 kw for BWR assemblies. Table 4-6 shows the cool times for the various assembly types and respective burnups.

4.6 Fission Gas Handling Evaluation

4.6.1 Existing Analyses

The present fission gas handling capability of the NLI-10/24 is not specifically called out in the Safety Analysis Report. A system of double containment is used to assure minimum release to the environment. The secondary containment is formed by an outer head seal. The primary containment is a combination of three(3) devices: the inner head seal and two(2) valve seals. Each seal must have a leak rate at or below 1×10^{-6} cm^3/sec (STP).

Table 4-5. Number of Maximum Decay Heat Assemblies Transportable by NLI-10/24 Cask (150 days cool time)

	Number of Assemblies @ 150 days		
Assembly (PWR)	35 GWD/MTU	45 GWD/MTU	55 GWD/MTU
Westinghouse 15 x 15	7	5	5
Westinghouse 17 x 17	6	5	4
Westinghouse 17 x 17 OFA	7	6	5
Combustion Engineering 14 x 14	9	7	6
Combustion Engineering 16 x 16	7	5	5
Babcock & Wilcox 15 x 15	7	5	5
Babcock & Wilcox 17 x 17	6	5	4
Assembly (BWR)	30 GWD/MTU	40 GWD/MTU	50 GWD/MTU
General Electric 8 x 8 RP	24	24	22

Table 4-6. Decay Times to Ship a Full Load of Assemblies of the Same Type and Burnup in the NLI-10/24 Cask

	Assembly Cool Time		
Assembly (PWR)	35 GWD/MTU	45 GWD/MTU	55 GWD/MTU
Westinghouse 15 x 15	270 days	330 days	390 days
Westinghouse 17 x 17	270 days	360 days	420 days
Westinghouse 17 x 17 OFA	240 days	300 days	360 days
Combustion Engineering 14 x 14	180 days	270 days	300 days
Combustion Engineering 16 x 16	240 days	330 days	390 days
Babcock & Wilcox 15 x 15	270 days	330 days	390 days
Babcock & Wilcox 17 x 17	300 days	360 days	450 days
Assembly (BWR)	30 GWD/MTU	40 GWD/MTU	50 GWD/MTU
General Electric 8 x 8 RP	150 days	150 days	180 days

4.6.2 New Analyses

The medium for radionuclide transport to the environment is the contaminated cavity helium. This helium will have been supplemented by the helium and fission gas trapped inside the fuel rods in the event of an accident or if leaking fuel is being transported. The pressure contribution of these additional gasses was used to recalculate the combined leak rate for the cask to the outer head cavity. The concentration of by-product gases in the cavity is small because of the large helium volume already present. The maximum permissible concentration of radionuclides in the cavity coolant is 0.01 curies/cm^3. The combined leak rate to the outer head cavity is 1.405 x 10^{-5} cm^3/sec. This gives a maximum rate of release of 0.09 curies/wk. This is significantly below the 1000 curies/wk rate considered allowable by Regulatory Guide 1.25. Additionally, the outer closure seal must also be breached for the fission gases to reach the environment, though no credit for this seal was taken.

The cask has been shown to meet the requirements for spent fuel transport for 150 day cool time, 55,000 MWD/MTU burnup assemblies. Since these assemblies represent the maximum levels of fission gas production in the assemblies under study, it can be concluded that the NLI-10/24 Cask can transport all burnups of the assemblies in question at 150 days cool time.

4.7 Combined Results

Each of the criteria for physical/dimensional interface, criticality, shielding, heat rejection, and fission gas handling have been evaluated separately from the others. This section combines the separate results into a single set of limits on the transportability of extended burnup fuels in the NLI-10/24 cask without design modification.

The limiting criteria for shipping extended burnup fuels in the NLI-10/24 cask are criticality, heat rejection and shielding. Criticality considerations restrict the number of transportable assemblies to 8 PWR and 20 BWR.

Shielding and heat rejection also limit the cool times of these fuels. Table 4-7 summarizes these results.

4.8 Design Modification Recommendations

The previous section demonstrated the limits on the number of extended burnup fuel assemblies that may be transported with the existing licensed design. This section examines the design options for upgrading the cask to be able to transport a larger combination of assembly types and burnups. From these options a design modification is recommended.

4.8.1 Design Options

The limiting criteria for criticality, shielding, heat rejection, fission gas handling, and physical/dimensional interface were examined to determine the applicability of design optimization. Section 4.3 shows that for reasons of criticality, at most only eight assemblies may be transported with burnups of 55,000 MWD/MTU using the 10 element PWR basket. A new basket can be designed for nine(9) 55,000 MWD/MTU assemblies such that the loaded basket k-eff is less than 0.95. The options for improvement to neutron shielding involve adding boron to the shield tank fluid; however, substantial improvement is not obtained through this process. Improvement in the heat rejection capability of the NLI-10/24 cask is not a viable option for modification due to the excessive re-building of the cask wall and the relicensing that would be required. The fission gas handling capability of the cask is adequate as designed. This basket design is presented in the following section.

4.8.2 Design Recommendation

The recommended design modification for the NLI-10/24 cask to increase its capacity for extended burnup fuels is to develop a nine(9) assembly basket. The design modification incorporates many of the existing basket design concepts. Changes to the physical location of the assembly cavities and a change in the neutron absorber are the major aspects of the new basket design. Figure 4-6 shows a cross section of the proposed design. A Boral

Table 4-7. Combined Transportable Limits for 8 PWR and 20 BWR Extended Burnup Fuel Assemblies in the NLI-10/24 Cask

Assembly (PWR)	Enrichment* % U-235	Cool Time in Years for Burnups of 35 GWD/MTU	45 GWD/MTU	55 GWD/MTU
Westinghouse 15 x 15	6.1	180 days	270 days	355 days
Westinghouse 17 x 17	5.9	210 days	270 days	1.4 years
Westinghouse 17 x 17 OFA	5.5	180 days	240 days	300 days
Combustion Engineering 14 x 14	5.5	150 days	180 days	1.25 years
Combustion Engineering 16 x 16	5.5	180 days	240 days	300 days
Babcock & Wilcox 15 x 15	6.4	180 days	270 days	1.4 years
Babcock & Wilcox 17 x 17	6.0	240 days	300 days	1.0 years

Assembly (BWR)	Enrichment** % U-235	Cool Time in Years for Burnups of 30 GWD/MTU	40 GWD/MTU	50 GWD/MTU
General Electric 8 x 8 RP	4.60	150 days	150 days	150 days

*Maximum enrichment transportable with 8 PWR assemblies in the 10 element basket.

**Maximum enrichment transportable with 20 BWR assemblies in the 24 element basket.

NLI 10/24 Construction (PWR Basket)

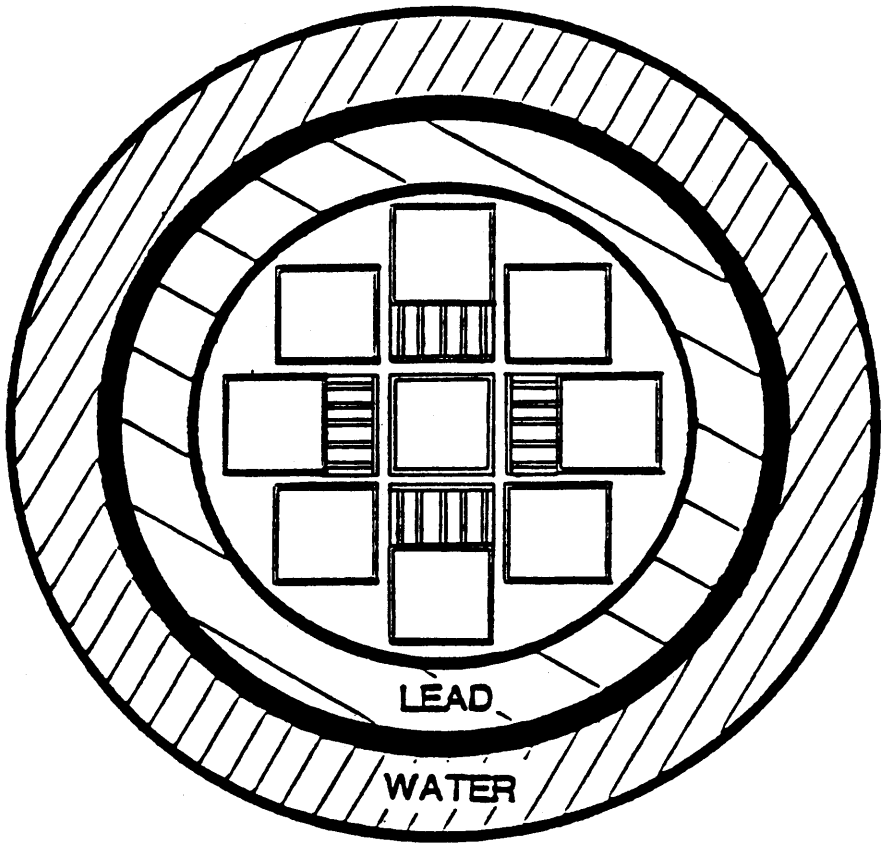

9 PWR Assemblies

Figure 4-6. NLI-10/24 Cask Cross-Section, Nine Element PWR

neutron absorber replaces the silver-indium-cadmiun alloy previously used. The criticality control sleeve (neutron absorber) design is unchanged except for length and material. This added length will allow transportation of Combustion Engineering 16 x 16 and General Electric 8 x 8 RP assemblies which previously were too long to fit the existing licensed basket. This design was analyzed just as the original basket had been analyzed. For the nine(9) element basket the most limiting criteria is heat rejection with all other limits lower or equal to this criteria. Table 4-8 shows the combined results for the new nine(9) element basket.

Burnup credit has been calculated for all assembly types in the NLI-10/24 cask and is shown in Table 4-3. Taking burnup credit would allow full loads to be transported; however, no baskets exist for the present fleet of casks. It will require a considerable expenditure for new baskets with the existing basket design in order for these casks to ship fuel. Also, the cool times required for a full load of 10 PWR or 24 BWR assemblies will have to be extended to use this basket. Therefore, the optimum design modification is still the new nine(9) element basket.

Table 4-8. Combined Limits for 9 PWR and 20 BWR Extended Burnup Fuel Assemblies in a Modified NLI-10/24 Cask

Assembly (PWR)	Enrichment* % U-235	Cool Time in Years for Burnups of 35 GWD/MTU	45 GWD/MTU	55 GWD/MTU
Westinghouse 15 x 15	5.35	240 days	300 days	1.0 years
Westinghouse 17 x 17	5.1	240 days	300 days	1.1 years
Westinghouse 17 x 17 OFA	4.85	150 days	270 days	330 days
Combustion Engineering 14 x 14	4.9	150 days	210 days	270 days
Combustion Engineering 16 x 16	4.9	210 days	270 days	330 days
Babcock & Wilcox 15 x 15	5.55	240 days	300 days	1.0 years
Babcock & Wilcox 17 x 17	5.25	270 days	330 days	1.1 years

Assembly (BWR)	Enrichment** % U-235	Cool Time in Years for Burnups of 30 GWD/MTU	40 GWD/MTU	50 GWD/MTU
General Electric 8 x 8RP	4.6	150 days	150 days	150 days

*Maximum enrichment transportable with 9 PWR assemblies in the 9 element basket.

**Maximum enrichment transportable with 20 BWR assemblies in the 24 element basket.

5.0 NAC-3K Cask Evaluation

The NAC-3K cask is a design proposed by Nuclear Assurance Corporation for the transportation of twelve(12) Biblis type PWR fuel assemblies. This cask design is presently not docketed for U.S. NRC licensing review. This cask was never designed with the intent of shipping BWR type fuels, and as such the General Electric 8 x 8 RP BWR assembly type is not included in the assembly design basis.

5.1 Cask Description

The NAC-3K cask consists of a low-alloy steel body capable of accommodating twelve(12) Biblis type PWR fuel assemblies. This basic packaging is supplemented with neutron shielding and heat rejection fins to accommodate high heat load, recently discharged fuel. Salient features of the cask include a thick walled, low-alloy steel cylinder serving both as the primary shielding and containment structure, removable fuel basket with criticality control structure, redundant lifting mechanisms, and multidirectional lightweight high energy absorption impact limiters. A sketch of the NAC-3K cask design can be seen in Figure 5-1. A cross-section through the cask wall and fuel basket is shown in Figure 5-2.

The NAC-3K cask is designed to meet or exceed all of the design requirements of Title 10, Code of Federal Regulations, Part 71, IAEA Safety Series 6 related to the shipment of large quantities of fissile Class III radioactive materials. Transportation will be on a rail car with only one(1) package per car.

The NAC-3K is basically a right circular cylinder. The cask body has heat dissipation fins and neutron shielding attached to the outer surface and is a thick-walled, low-alloy steel "pressure" vessel having a nominal wall thickness of 14 inches with the ends formed from 9-inch thick low-alloy steel plate. The cask lid closure is a bolted flange formed by one of the 9-inch plates. All inside surfaces of the cask and all surfaces of the lid are stainless steel weld clad. The ends of the cask are covered by impact

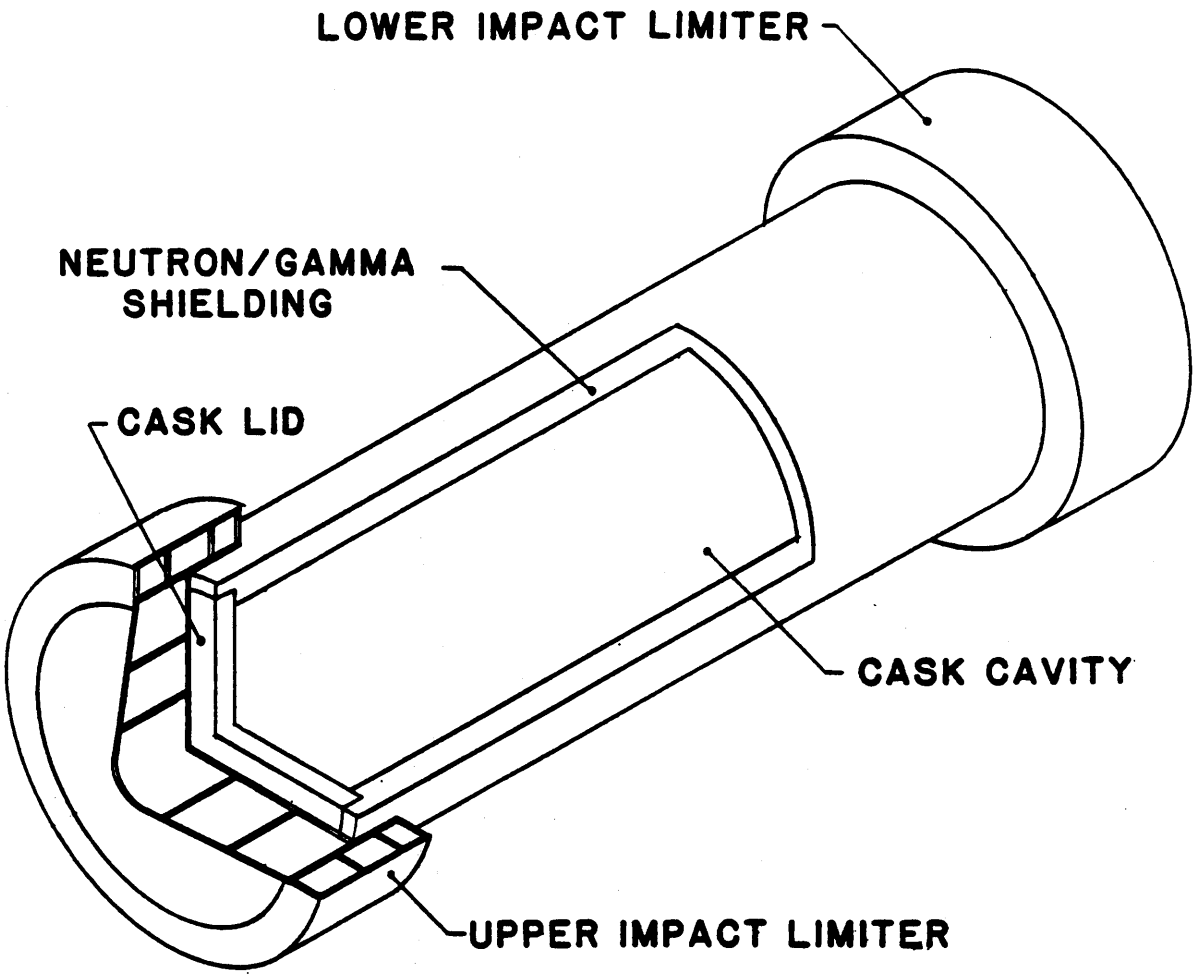

SPENT FUEL SHIPPING CASK
NAC 3

Figure 5-1. NAC-3K Spent Fuel Shipping Cask

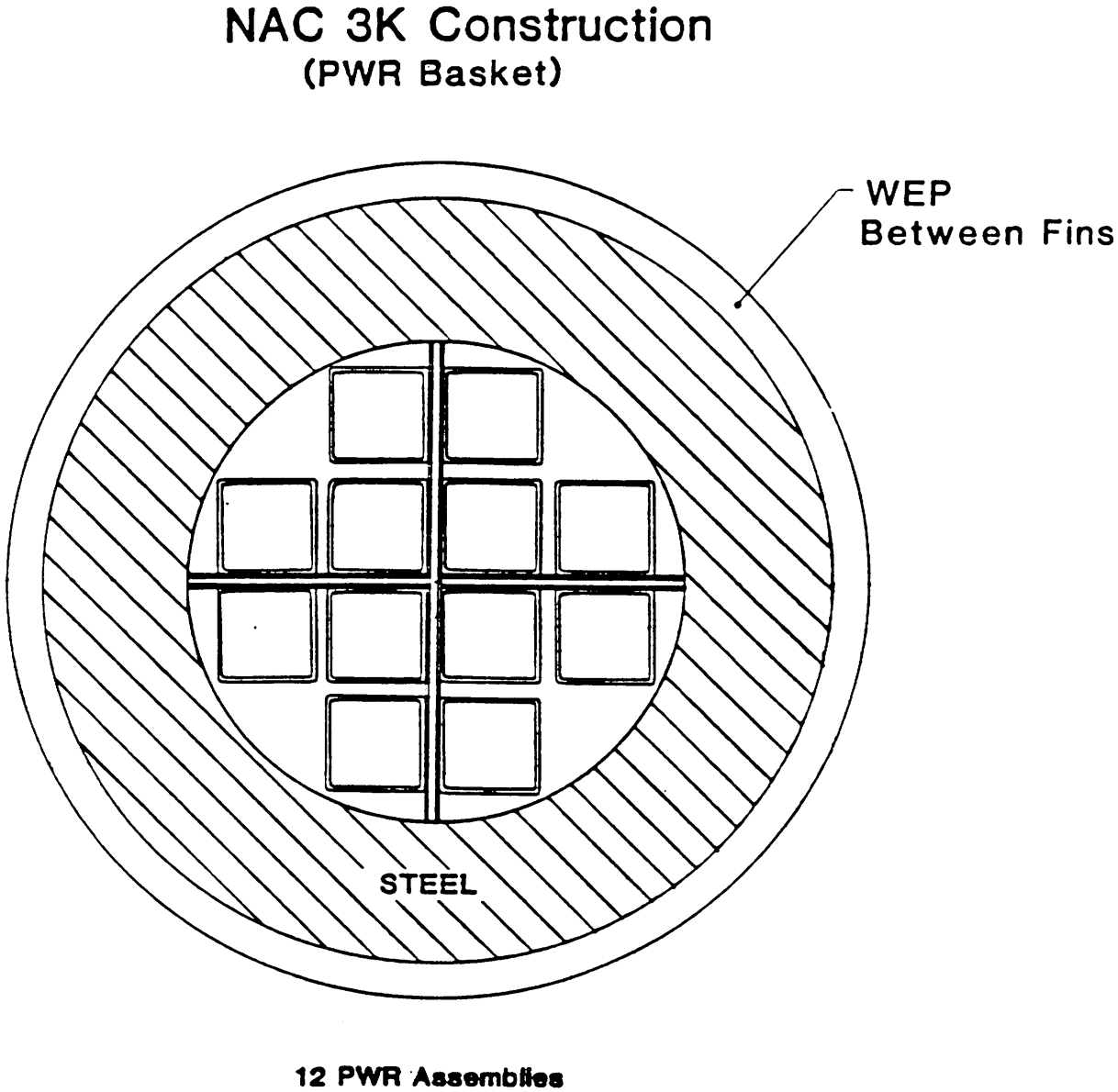

Figure 5-2. NAC-3K Cask Cross-Section, PWR Fuel

limiters which protect the cask during normal operations and hypothetical accident conditions.

The overall external dimensions of the cask include a length of 283 inches with upper and lower impact limiters; 213 inches without impact limiters and a maximum cross section diameter of 76 inches. The internal cavity is 195 inches long and 47.8 inches in diameter. The cavity has five(5) penetrations: a vent valve, a relief valve and rupture disk, two drain valves, and the bolted closure.

5.1.1 Containment Boundary

The primary containment is defined as the cask wall and lid, the lid O-ring seals, the seals of the vent and drain valves, and the pressure relief valve. The two Teflon O-rings in the cask lid are seated against the machined surface of the cask body lid recess.

There are two(2) drain holes in the bottom end of the cask for emptying liquid contents. The ball valves which seal these are stainless steel with Teflon seats. A sealed valve cover provides security as well as a redundant seal for the cask containment. The vent valve is identical to the drain valve except that it is located at the top part of the cask cavity.

In the unlikely event that pressure relief of the cavity should be required, a rupture disc in the cavity flange will allow pressure release. The rupture disc is mounted in a counterbore which is sealed by a thin cap. The rupture disc assembly also has a safety relief valve as a backup.

5.1.2 Shielding

The steel body provides gamma shielding, with a minimum thickness on the sides of 14 inches and on the top and bottom of 9 inches. Neutron attenuation is provided by the basket criticality control sleeves, in addition to a 2 inch thick layer of water-extended polyester encapsulated in a channel formed at the base of each heat transfer fin. The material is a solid matrix of

hardened polyester plastic and encapsulated water-boron-ethylene glycol liquid droplets. The water-extended polyester is retained and hermetically sealed by an epoxy potting compound.

5.1.3 Heat Rejection

Passive heat removal components are utilized for the transfer of heat from the fuel assemblies to the outside environment. The cavity of the cask is filled with water when the fuel assemblies are loaded into the cask, and the water remains in the cask to provide an effective means for transferring heat from the fuel rods to the cask. A small amount of water is drained from the cask prior to its shipment, to permit expansion without over-pressurization during normal and accident conditions.

The primary mode of heat transfer from the NAC-3K cask surface to the environment is by convective and radiative heat transfer from circumferential fins welded to the cask body. Seventy-nine(79) copper fins are used for this purpose. These fins have a nominal thickness of .12 inch and free radial length of 5.90 inches. The center to center spacing is nominally 1.75 inches. Each fin is painted with a corrosion and abrasion resistant coating.

The maximum design heat load for the NAC-3K design is 100 kw. A heat load of 20 Kw prevents freezing of the water when the cask is exposed to a -40°F ambient temperature. Ample expansion space is available to prevent damage to the cask if freezing occurs, but due to fuel handling considerations, freezing will be prevented by draining the containment vessel if freezing conditions are probable and the total decay heat load is 20 kW or less.

5.1.4 Impact Limiters

A removable impact limiter is bolted to each end of the cask. The limiters consist of a crushable material, such as redwood, encased in a sheet or plate housing. The thin stainless steel support webs inside the impact limiters are to confine and orient each section, and provide minimal resistance to crushing.

5.1.5 Transportable Contents

The NAC-3K cask is designed to contain up to twelve(12) Biblis type PWR fuel assemblies. The cask is not designed to carry BWR fuel types. All fuel assemblies will be shipped in the stainless steel fuel basket which provides both structural support and neutron poison. The basket is designed to retain its structural integrity and maintain a sub-critical geometric configuration during the hypothetical accident conditions. Clearances are provided between the basket and the cask cavity for thermal expansion purposes.

The identity and maximum fission product radioactivity of the materials which the NAC-3K cask may contain is as follows:

Element	Transport Group	Radioactivity (curies)
Mixed Fission products	II	3.68×10^7

The maximum contained neutron source strength of the NAC-3K cask is 4.28×10^9 neutrons/sec.

The fuel assembly data given in Table 5-1 typify those which the NAC-3K cask is designed to transport.

5.2 Physical/Dimensional Evaluation

The NAC-3K cask is designed for twelve(12) Biblis-type PWR assemblies. The basket design was specifically developed for these assemblies. The assembly envelope for this basket is defined as 1) the length from the inner surface of the lid to the fuel support plate at the bottom of the basket, 2) the cross-section dimensions for each assembly cavity, and 3) the total design weight for the fuel. These dimensions were taken from the original design evaluations and are presented as Table 5-2. below.

Table 5-1. NAC-3K Fuel Assembly Specifications

Assembly Cross-section	22.97 x 22.97 cm
Active Fuel Height	390 cm
Assembly Fuel Loading	0.530 MTU
Fuel Rod O.D.	1.075 cm
As-built Pitch	1.43 cm
Clad Thickness	0.07125 cm
Fuel Rod Array	17 x 17
Active Fuel Rods	264
UO_2 Theoretical Density	95%
Average Burnup	35,000 MWD/MTU

Table 5-2. NAC-3K Assembly Envelope

Assembly Type	Envelope Length (in)	Envelope Side (in) x Side (in)	Fuel Design Weight (lb)
PWR	187	9.88 x 9.88	1833/assembly

The assembly envelope was compared to the fuel physical data presented in Section 7. All the PWR assemblies examined may be transported in an NAC-3K cask with respect to shape and weight. The NAC-3K is not designed to carry BWR fuel.

5.3 Criticality Evaluation

5.3.1 Existing Analyses

The NAC-3K represents a preliminary cask design which has not been licensed by the U.S. NRC. Preliminary design calculations indicated that a twelve assembly PWR fuel basket could be designed which provided adequate criticality safety margin for discharged PWR fuel of the type specific to the original design basis. These analyses are fuel design specific and are, thus, not applicable to the present study. The PWR basket design formulated as a result of these analyses was, however, taken to be the "existing cask design" for the purpose of the analyses described in Section 5.3.2. The cask is not designed to carry BWR type fuels and no analysis of these fuels is included in the SAR.

5.3.2 New Analyses

The most reactive PWR assembly, the Westinghouse 17 x 17 OFA, was analyzed under both normal operating conditions and the hypothetical accident conditions for a full load of twelve(12) assemblies and a partial load of eight(8) assemblies. The hypothetical accident conditions were found to be the most limiting case. Additional analyses were carried out for each of the remaining fuel types to more fully determine the fuel carrying limitations of the design basis basket design.

5.3.3 Determination of Limits

Maximum enrichment versus fuel type for fully loaded and partially loaded cases are presented in Table 5-3. This table shows that the NAC-3K cask is not capable of transporting a full load of 12 PWR assemblies at the enrichments required to achieve 55,000 MWD/MTU assembly-average burnup. However, the cask is capable of carrying a partial load of 8 PWR assemblies at enrichment levels required for achieving this high burnup.

5.4 Shielding Evaluation

5.4.1 Existing Analyses

The NAC-3K cask design calculations indicate that the hypothetical accident scenario for the NAC-3K design does not result in any change to the gamma shielding and the neutron shielding requirements on the cask ends. Only the radial neutron dose rate would be affected by this event. If all the neutron shield Water-Extended Polyester (WEP) were lost during the accident, the monolithic cask wall would maintain dose rates at less than 10% of the NRC limit. Thus, only the normal operation conditions restrict the shipment of high-burnup fuel in this cask design. This has been considered in the evaluation of the limits for shielding extended burnup PWR fuels.

5.4.2 Determination of Limits

The maximum source strengths that would produce acceptable dose rates were determined. Comparison with the source strengths provided by Westinghouse allowed the minimum cool time to be determined. Cool times required for the seven(7) PWR fuel types at the three burnups considered are shown in Table 5-4.

5.5 Heat Rejection Evaluation

5.5.1 Existing Analyses

The NAC-3K Cask design thermal analyses were examined to determine the thermal analysis data basis. This data was used as the basis for the thermal

Table 5-3. Maximum Enrichments Transportable by the NAC-3K Cask

Assembly (PWR)	12 Assemblies				8 Assemblies	
	% Enrichment	Resultant Burnup (GWD/MTU)	Enrichment Required*	Minimum** Burnup Required (GWD/MTU)	% Enrichment	Resultant Burnup (GWD/MTU)
Westinghouse 15 x 15	2.80	<35	4.8	19	5.60	>65
Westinghouse 17 x 17	2.67	<35	4.8	21	5.38	>65
Westinghouse 17 x 17 OFA	2.60	<35	4.7	21	5.07	61
Combustion Engineering 14 x 14	2.63	<35	4.5	19	5.11	>65
Combustion Engineering 16 x 16	2.64	<35	4.7	20	5.12	62
Babcock & Wilcox 15 x 15	2.81	<35	4.8	20	5.87	>65
Babcock & Wilcox 17 x 17	2.76	<35	5.1	25	5.51	60.5

Assembly (BWR)

The NAC-3K is not designed to transport BWR fuels.

*Enrichment required to achieve assemby burnup of 55,000 MWD/MTU

*Minimum burnup to reduce enrichment to transportable limits for full loads

Table 5-4. Minimum Cool Times for Transportable Assemblies in the NAC-3K Cask with Respect to Shielding

Assembly (PWR)	Cool Time for Burnups of 35 GWD/MTU	45 GWD/MTU	55 GWD/MTU
Westinghouse 15 x 15	3.9 years	16.2 years	24.4 years
Westinghouse 17 x 17	3.0 years	15.7 years	28.2 years
Westinghouse 17 x 17 OFA	1.8 years	13.5 years	26.0 years
Combustion Engineering 14 x 14	1.5 years	11.7 years	23.4 years
Combustion Engineering 16 x 16	1.8 years	13.2 years	24.7 years
Babcock & Wilcox 15 x 15	4.0 years	12.6 years	25.8 years
Babcock & Wilcox 17 x 17	2.0 years	15.1 years	23.8 years

Assembly (BWR)

The NAC-3K cask is not designed to transport BWR fuels.

evaluation of extended burnup PWR fuel types. The rated decay heat load for the NAC-3K is 100kw. A bulk cavity water temperature of 202°C (396°F) and a surface temperature of 131°C (268°F) were presented in the SAR thermal analysis.

The TRUMP computer program was used in the SAR to analyze the NAC-3K cask. A half-symmetry model in R-Z geometry was formed with a homogenized mixture for the cavity contents. While this resulted in the reported bulk water temperature, a detailed temperature distribution for the basket is not calculated. Maximum pin temperatures were not directly derived, but an average pin temperature was calculated as 500°C (932°F). The normal operating (130°F day) pressure was calculated as 2.35 mPa.

5.5.2 New Analyses

In order to decompose the homogenized basket into component parts for analysis, a model of the basket was made using HEATING5. The cavity wall temperature of 195°C (383°F) was used as the boundary for the basket model. The basket structure was detailed such that a temperature distribution could be obtained for the basket. This model produced a maximum basket temperature of 344°C (851°F) with the maximum average assembly enclosure surface temperature of 301°C (544°F) for normal conditions.

If the cask were loaded with maximum decay heat assemblies, the total decay heat load would be 187.2 kw. This far exceeds the maximum rated heat load for the cask. While assemblies that have cooled longer than 150 days may be used to obtain a full load without exceeding the design heat load, an analysis was done to determine the maximum number of maximum decay heat assemblies which will fit into the cask without exceeding a total of 100 kw. This analysis shows that the maximum basket temperature is less than that predicted for 100 kw due to the increased amount of water available for circulation. Once it has been assured that maximum decay heat assemblies do not produce locally excessive temperatures when the total decay heat approaches rated capacity, the limiting assembly cool times may be evaluated.

5.5.3 Determination of Limits

Tables 5-5 and 5-6 show the limiting cases for the NAC-3K cask. The Table 5-6 shows the maximum number of 150 day cool time PWR assemblies which may be transported on the basis of cask heat rejection. The Table 5-6 shows the cool time required to ship a full load of a single assembly type and burnup.

5.6 Fission Gas Handling Evaluation

5.6.1 Existing Analyses

The existing containment analysis for the NAC-3K identifies five(5) leakage pathways from the cask containment to the environment. These consist of one(1) bolted closure with double O-ring seals, one(1) pressure release device, two(2) drain valve seals, and one(1) vent valve seal. The valves and O-ring sets were assigned leakage rates from qualification tests by the item's manufacturer. The cavity coolants are water and air. The calculated release from the NAC-3K cask for its design fuel is 0.13 curies/week.

5.6.2 Determination of Limits

Since there are two(2) mediums for release of activity to the environment, the cask was examined for the orientations obtainable during the accident scenario. Only PWR fuels were evaluated since the cask was designed for only PWR fuels. The small gaseous volume and high pressure of the cavity show that the cask will have higher than allowable radionuclide concentrations for all burnups of the PWR fuels examined when those assemblies only have a 150 day cool time. Analysis shows that levels of coolant (air) contamination do not decline (by decay) to a significantly reduced level through the 10 years of curie data presented. Thus, a full load of any of the extended burnup PWR fuel assemblies may not be carried in the NAC-3K cask when shipped wet.

The NAC-3K cask may, however, be shipped dry if the total cavity thermal load is reduced to 20 kw. Analysis shows that with respect to fission gas handling the cask could carry 150 day cool fuel if the water was removed from the

Table 5-5. Maximum Decay Heat Assemblies Transportable by NAC-3K Cask (150 days cool time) With Respect to Heat Rejection

Assembly (PWR)	Number of Assemblies @ 150 days		
	35 GWD/MTU	45 GWD/MTU	55 GWD/MTU
Westinghouse 15 x 15	10	8	7
Westinghouse 17 x 17	9	7	6
Westinghouse 17 x 17 OFA	11	8	8
Combustion Engineering 14 x 14	12	10	9
Combustion Engineering 16 x 16	10	8	7
Babcock & Wilcox 15 x 15	10	8	7
Babcock & Wilcox 17 x 17	9	7	6

Assembly (BWR)

The NAC-3K cask is not designed to transport BWR fuels

Table 5-6. Cool Times to Ship a Full Load of Assemblies of the Same Type and Burnup in the NAC-3K Cask With Respect to Heat Rejection

Assembly (PWR)	Assembly Cool Time		
	35 GWD/MTU	45 GWD/MTU	55 GWD/MTU
Westinghouse 15 x 15	180 days	270 days	330 days
Westinghouse 17 x 17	210 days	300 days	1 year
Westinghouse 17 x 17 OFA	180 days	270 days	300 days
Combustion Engineering 14 x 14	150 days	180 days	210 days
Combustion Engineering 16 x 16	180 days	270 days	300 days
Babcock & Wilcox 15 x 15	210 days	270 days	330 days
Babcock & Wilcox 17 x 17	270 days	330 days	390 days

Assembly (BWR)

The NAC-3K cask is not designed to transport BWR fuels.

cavity. This is because of the much expanded volume into which the radionuclides are dispersed. Therefore, the limiting variable for fission gas handling will be assembly cool time. Table 5-7 shows the minimum cool times required to reduce the total decay heat load to 20 kw such that a full load of assemblies may be transported.

5.7 Combined Results

Each of the limiting criteria presented in the preceding sections addressed a separate limiting case. This section presents a single combined set of limits for enrichment and cool time which bound the extended burnup fuel types transportable in the NAC-3K cask.

The limiting factor which restricts transportability of the 55,000 MWD/MTU burnup fuel types is shielding. The long cool times required to ship full loads dictate partial loading in order for this cask design to be used. Other burnups are restricted by fission gas handling requirements which limit the cask to "dry" shipments. Table 5-8 shows the maximum enrichment transportable for eight assemblies and shows the minimum transportable cool times for the three(3) average burnups values examined.

5.8 Design Modification Recommendations

The previous section combined the transportability limits for each of the criteria of criticality, shielding, heat rejection, fission gas handling, and physical/dimensional interface into a single set of limits for the NAC-3K cask. This section examines the opportunity for design optimization through design modification and revision.

The NAC-3K cask was designed for Biblis type PWR fuels and was not designed for BWR fuels. Of the four(4) cask designs evaluated, the NAC-3K is the least applicable design for transporting assemblies other than the cask's design base fuel. The extent of design modification that would be required to adapt the NAC-3K cask to extended burnup fuels is on the same order of magnitude as designing a new cask. A new design effort is beyond the scope of this

Table 5-7. Cool Times Required for Transport Based on Fission Gas Handling for the NAC-3K Cask

Assembly (PWR)	Cool Time (years) 35 GWD/MTU	45 GWD/MTU	55 GWD/MTU
Westinghouse 15 x 15	3.25	4.25	6.25
Westinghouse 17 x 17	3.24	4.50	6.50
Westinghouse 17 x 17 OFA	3.00	4.00	5.50
Combustion Engineering 14 x 14	2.75	3.50	4.25
Combustion Engineering 16 x 16	3.00	4.00	5.50
Babcock & Wilcox 15 x 15	3.25	4.00	6.25
Babcock & Wilcox 17 x 17	3.25	4.50	6.00

Assembly (BWR)

The NAC-3K cask is not designed to carry BWR fuels.

Table 5-8. Combined Limits for 8 PWR Extended Burnup Fuel Assemblies in the NAC-3K Cask

Assembly (PWR)	Enrichment* w/o U-235	Cool Time in Years for Burnups of 35 GWD/MTU	45 GWD/MTU	55 GWD/MTU
Westinghouse 15 x 15	5.07	3.25	6.00	20.00
Westinghouse 17 x 17	5.38	3.25	5.50	22.00
Westinghouse 17 x 17 OFA	5.60	3.00	4.00	19.80
Combustion Engineering 14 x 14	5.51	2.75	3.50	15.80
Combustion Engineering 16 x 16	5.87	3.00	4.00	18.70
Babcock & Wilcox 15 x 15	5.11	3.25	4.00	20.70
Babcock & Wilcox 17 x 17	5.12	3.25	4.90	17.80

Assembly (PWR)

The NAC-3K Cask is not designed to transport BWR fuels.

*Maximum enrichment transportable with 8 PWR assemblies in the 12 element basket.

project. Therefore, there are no recommended design modifications to enhance the ability of the NAC-3K cask to transport extended burnup fuels.

6.0 Analysis Methodologies

This section is devoted to describing the analysis methodologies used for the criticality, shielding, heat rejection, and fission gas handling evaluations of the four(4) cask designs.

6.1 Criticality Methodology

The criticality analyses were performed for both normal operating and hypothetical accident configurations. Normal operating conditions use the as-built fuel rod dimensions and pitch with assemblies positioned in the fuel basket in the most reactive location. The cask cavity is assumed to be filled with water at its highest density and the cask is assumed to be surrounded with a water reflector. An identically configured cask is assumed to be in the closest possibly proximity. Hypothetical accident assumptions differ from the normal operating assumptions in that a single cask is considered and the fuel rods are assumed to be in the most reactive pitch possibly within the fuel basket walls. If structural analyses indicate that the basket walls may deform in the hypothetical accident, the maximum area within the basket walls is considered to be available to the fuel rods to create the optimally moderated configuration for the available area.

The fuel assemblies were considered to be at their most reactive burnup for all criticality analyses. For PWR fuel types considered in this project, the maximum reactivity occurs for the initial enrichment, unburned fuel assembly. For the General Electric 8 x 8 RP fuel assembly which contains a burnable neutron poison, the maximum reactivity may occur after some burning has occurred. Since the burnup for which maximum reactivity occurs is fuel enrichment dependent and somewhat hard to define, the assumption is made that the burnable poison is totally absent and the fuel is at its initial, unburned enrichment. This is a more reactive configuration than the fuel will actually achieve at any point in its cycle.

The criticality analyses were performed using the AMPX cross-section processing codes NITAWL and XSDRNPM and the Monte Carlo criticality code

KENO-IV. These codes are available from the Reactor Shielding Information Center, Oak Ridge, Tennessee. The NULIF point depletion code available from the Babcock and Wilcox Computing Services Division is used to obtain k-inf values for the various fuel rod enrichments and pitches and also provides Dancoff Correction Factors and effective moderator cross-section values.

6.2 Shielding Methodology

The shielding evaluation for each cask was performed in two steps. First, the existing SAR shielding analysis was examined. If a sizable excess margin was apparent due to a large amount of conservatism in the original analysis, a new analysis was performed using more realistic, but still conservative, assumptions. Secondly, a dose rate per unit source strength was calculated for the fuel assemblies examined. This was accomplished by normalizing the cask dose rate at 6 feet from the cask surface for normal conditions and at 3 feet from the cask surface for hypothetical accident conditions. The units of source strength per cm of active fuel length are 10^5 neutrons per second and 10^{12} MeV per second (gamma).

6.2.1 Gamma Shielding

The QAD point kernal shielding code was used to examine the gamma shielding analyses in the four cask SARs. Detailed gamma analyses were not required for this project as the previous analyses did not impose any unnecessary restrictions on the shipment of high burnup fuel that could be significantly altered by reanalysis.

6.2.2 Neutron Shielding

The XSDRNPM cross-section processing/shielding code was used to analyze the neutron shielding for each cask to remove unnecessary conservatism from the existing cask analyses. XSDRNPM is similar to the ANISN code used in the original SAR analyses, and generates equivalent results in shielding calculations. XSDRNPM performs a one-dimensional (radial or axial) S_n transport calculation and may be normalized to a specified unit source

strength. XSDRNPM is distributed by the Reactor Shielding Information Center as part of the AMPX cross-section processing package.

6.3 Heat Rejection Methodology

Original designs of spent fuel shipping casks are based on a specific decay heat load. Rejection to the environment of the contained fuel's decay heat along with specified ambient conditions establishes the temperature distribution through the various structural components of the cask. The structural analysis of the cask and hence the cask license is based on the design temperature distribution. To accomodate a greater heat load, the cask structure would have to be changed and a new structural analysis performed to demonstrate licensability. This is outside the scope of this program. Therefore, the minimum required cooling time for the high burnup fuel has been increased such that the cask contents do not exceed the originally licensed thermal capacity of the cask.

The maximum decay heat of any of the extended burnup assemblies to be used is 15.6 kw at 150 days cool time. This is for the Babcock and Wilcox 17 x 17 assembly at 55,000 MWD/MTU burnup which was used as the "worst case" assembly. By examining the maximum decay heat limits for each cask it may be seen that the heat limits for each cask are exceeded if a full load of worst case assemblies is to be transported. For single element casks it was assumed that the assembly has a cool time which will bring the total assembly decay heat to below the cask limit. Multi-element casks may carry the worse case assemblies if the total number of assemblies are reduced such that the total heat load does not exceed the cask limit. A cool time for a full load of assemblies was also chosen for multi-element casks such that the maximum heat load will not be exceeded.

The HEATING5 program was used to evaluate the thermal response of each cask design. HEATING5 solves steady-state and/or transient heat conduction problems in one-, two-, or three-dimensional Cartesian or cylindrical coordinates or one-dimensional spherical coordinates. The thermal properties of the cask components were taken from the respective cask Safety Analysis

Report (SAR) when feasible. Using the SAR values will allow easy revision to the SAR at a future date. After each cask had been evaluated for heat rejection, a determination was made of the highest burnup for each assembly type which may be transported based only on heat rejection.

6.4 Fission Gas Handling Methodology

6.4.1 Analysis Requirements

The requirements for fission gas handling analysis are established by Title 10 of the Code of Federal Regulations, Part 71, Section 36 (10 CFR 71.36) which states that as a result of the hypothetical accident conditions:

> "(2) No radioactive material would be released from the package except for gases and contaminated coolant containing total radioactivity exceeding neither:
> (i) 0.1 percent of the total radioactivity of the package contents; nor
> (ii) 0.01 curie of Group I radionuclides,
> 0.50 curie of Group II radionuclides,
> 10.0 curies of Group III radionuclides,
> 10.0 curies of Group IV radionuclides, and
> 1000.0 curies of inert gases irrespective of transport group."

The normal conditions of transportation are not directly addressed by this analysis requirement. In normal shipment the fuel is presumed intact, thus there is no coolant contamination by fission by-product gases.

The hypothetical accident conditions are established by 10 CFR 71, Appendix B. This accident scenario consists of the cask falling through 30 feet to strike an unyielding surface, followed by a 40 inch drop onto a 6 inch steel pin, followed by a fire immersion test, and ending in a water submersion test.

There are several consequences of this scenario which have a direct affect upon cask fission gas handling capability. The 30 foot drop is assumed to

cause the fuel rods to rupture freeing gases trapped in the fuel assemblies. This increases the coolant contamination (and the cavity pressure), making more radionuclides available for release to the environment. The increase in cavity pressure is enhanced by the fire test which will elevate the cavity temperature and the cavity pressure. Pressure is the driving force for dispersal of fission gas from the cask cavity and an increase in pressure will increase the rate of radionuclide release.

6.4.2 Determination of Analysis Conditions

To calculate the rate of radionuclide release to the environment after the hypothetical accident, the cavity pressure and temperature must be known as well as the quantities of radionuclides available for release. Once these values were determined, the rate of release may be calculated based on the leak rates of the containment seals.

Cask cavity volume, cavity pressure and temperature, available transport medium (coolant), and sealing device leak rates were determined from data presented in each cask's Safety Analysis Report (SAR). The amounts of available material for release were calculated from the data presented by Westinghouse for this program (see Section 7.0 - Fuel Data) as interpreted by Regulatory Guide 1.25 (NRC Safety Guide 25). The calculational methods used in this analysis derive from ANSI 14.5-1977, "Leakage Tests on Packages for Shipment of Radioactive Materials" and from "Regulations for Safety Transport of Radioactive Materials, Safety Series 6," IAEA-1973.

The accident scenario from 10 CFR 71 was the only area of concern for the fission gas handling evaluation. It was assumed that for normal conditions of transport the contamination of cavity coolant from the extended burnup fuel assemblies would be no greater than normal burnup assemblies. It was further assumed that these assemblies would be intact and that the cladding integrity had not been breached. This results in having no fission gas products available for release during normal transport. Radioactive material is assumed to be unable to cross the containment seals under pressures and temperatures of normal transport.

6.4.3 Analysis Procedure

The first step in the procedure for evaluating cask fission gas handling is to examine the cask SAR for the maximum accident condition cavity temperature and pressure, the leak rates for all leakage pathways from the containment to the environment, the "available" volume of the cavity (volume of non-solid material in the cavity under normal conditions), and the medium of transport for the gaseous fission products. The cavity pressure is then modified by the released assembly gases as a result of rod rupture following the 30 foot fall. The level of activity for the coolant is calculated from the volume and amounts of material available for release. The orientation of the cask with respect to the identified leak pathways and available transport media (cavity coolant(s)) is also evaluated. From this the cumulative rate of release for each pathway is calculated based on the specific leakage rate and the transporting medium. The release rates are compared to the limits set by 10 CFR 71 to determine the transportability of a given fuel assembly type and burnup.

Section 7.0 Extended Burnup Fuel Data

This section presents the extended burnup fuel data used in the analysis of the four(4) cask designs. This data has been extracted from a Westinghouse letter, DP-DOE-82022, dated 3 March 1982 and other corrective communications. The data has been evaluated for completeness (Task 401) and additions and corrections have been made as necessary.

There are eight(8) assembly types to be considered inside the scope of this program. There are seven(7) PWR type assemblies and one(1) BWR type assembly. Each assembly is listed below.

Table	PWR	Table	BWR
7-1	Westinghouse 15 x 15	7-8	General Electric 8 x 8 RP
7-2	Westinghouse 17 x 17		
7-3	Westinghouse 17 x 17 OFA		
7-4	Combustion Engineering 14 x 14		
7-5	Combustion Engineering 16 x 16		
7-6	Babcock & Wilcox 15 x 15		
7-7	Babcock & Wilcox 17 x 17		

Each table actually consists of a series of tables, e.g., 7-1a, 7-1b, etc. Each letter table contains data of the same type. For example, the "h" series of tables contains Fission Gas Production in curies per assembly for Krypton-85.

7.1 Physical Data

The physical dimensions of each assembly are given by the "a" series tables, e.g., table 7-1a is the physical data for the Westinghouse 15 x 15 assembly, 7-2a is the Westinghouse 17 x 17 assembly, etc. This data describes the assembly configuration, fuel pin and pellet dimensions, plus other items as initial content of uranium in the assembly. An "a" series table has been provided for each of the eight assemblies.

7.2 Source Term Data

There are three(3) tables of average photon source and one(1) table of average neutron source per assembly. The three burnups considered in this program produce three average photon source distributions. The "b", "c", and "d" series tables represent photon spectrums for 35000, 45000, and 55000 MWD/MTU burnups (30000, 40000, and 50000 for BWR fuel), respectively. Each table provides the average MWD burnup, the initial weight percent of U-235 enrichment, and the energy release rates (in MeV/sec) per centimeter of active fuel lengths for twelve(12) energy groups from initial discharge to 10 years after discharge. It should be noted that the photon sources for actinides and their daughters are negligible with respect to the fission product sources.

The neutron source table, the "e" series tables, contains only the average neutron source. From 85% to 95% of the neutron source spectrum derives from Curium-242 and Curium-244 which is quite similar to that of Californium-252. The californium spontaneous fission neutron spectrum was inferred for the extended burnup fuel source spectrum.

The "f" series (e.g., Table 7-4f - Combustion Engineering 14 x 14 Decay Heat) of tables provide a decay heat vs. time after discharge relationship for all three burnups for each assembly type. The decay heat is represented in kw/assembly.

The fission gas production of each assembly is shown in the "g", "h", and "i" series of tables for Tritium, Krypton-85, and Xenon-135, respectively. Each table lists curies/assembly as a function of time after discharge for each of the burnups considered. In addition, the fission gas product volume at discharge is represented in liters, assembly at standard temperature and pressure. It should be noted that the irradiation induced helium and radon quantities are negligible with respect to the gases listed and are excluded.

Table 7-1a. Westinghouse 15 x 15 Fuel Physical Parameters

Parameter	Value
Array configuration	15 x 15
Rod pitch, in.	0.546
Fuel composition	UO_2
Fuel density, %th	.95
Fuel pin outside diameter, in.	.422
No. of pins per assembly	204
Cladding thickness, in.	.0243
Cladding material	Zirc-4
Assembly outside dimensions, in. x in.	8.426 x 8.426
Assembly length, in.	159.765
Active fuel length, inc.	144
Axial location of fuel, in. from top	11.6
Representative weight/assembly, kg	703
Initial U content/assembly, kg	459.1
Tie plate smear thicknesses in. upper/in. lower	.41/.55
Time between cycles, days*	50
Time average power for each assembly, MW*	16.5
Assembly irradiation growth, in	0.7

*Nominal

Table 7-1b. Westinghouse 15 x 15 Photon Spectrum
35000 MWD/MTU, 4 Cycles
47.15 MWD Average Burn-up
3.09 w/o U-235 Initial Enrichment

Twelve Group Energy Release Rates (MeV/sec) based on 1 cm of Active Fuel Length

E_{mean} (MeV)	Initial	150 Day	1 Year	2 Years	3 Years	4 Years	5 Years	6 Years	7 Years	8 Years	9 years	10 years
0.30	3.49×10^{14}	1.48×10^{12}	7.60×10^{11}	3.66×10^{11}	2.05×10^{11}	1.36×10^{11}	1.05×10^{11}	9.03×10^{10}	8.24×10^{10}	7.74×10^{10}	7.38×10^{10}	7.09×10^{10}
0.63	1.42×10^{15}	5.69×10^{13}	2.35×10^{13}	1.47×10^{13}	1.10×10^{12}	8.53×10^{12}	6.84×10^{12}	5.65×10^{12}	4.80×10^{12}	4.18×10^{12}	3.72×10^{12}	3.38×10^{12}
1.10	8.76×10^{14}	1.61×10^{12}	1.15×10^{12}	8.37×10^{11}	6.50×10^{11}	5.30×10^{11}	4.47×10^{11}	3.87×10^{11}	3.41×10^{11}	3.05×10^{11}	2.74×10^{11}	2.49×10^{11}
1.55	8.04×10^{14}	9.62×10^{11}	6.52×10^{11}	3.98×10^{11}	2.58×10^{11}	1.73×10^{11}	1.19×10^{11}	8.38×10^{10}	5.96×10^{10}	4.28×10^{10}	3.10×10^{10}	2.26×10^{10}
1.99	2.05×10^{14}	6.18×10^{11}	3.61×10^{11}	1.48×10^{11}	6.09×10^{10}	2.50×10^{10}	1.03×10^{10}	4.30×10^{09}	1.82×10^{09}	7.96×10^{08}	3.76×10^{08}	2.02×10^{08}
2.38	2.00×10^{14}	2.31×10^{09}	1.98×10^{04}	5.00×10^{-05}	1.26×10^{-13}	3.19×10^{-22}	8.05×10^{-31}	2.03×10^{-39}	5.13×10^{-48}	1.30×10^{-56}	3.27×10^{-65}	8.26×10^{-7}
2.75	1.00×10^{14}	4.01×10^{07}	3.43×10^{02}	8.67×10^{-07}	2.19×10^{-15}	5.52×10^{-24}	1.39×10^{-32}	3.52×10^{-41}	8.89×10^{-50}	2.24×10^{-58}	5.67×10^{-67}	1.43×10^{-7}
3.25	2.43×10^{14}	1.58×10^{07}	1.35×10^{02}	3.41×10^{-07}	8.62×10^{-16}	2.18×10^{-24}	5.49×10^{-33}	1.39×10^{-41}	3.50×10^{-50}	8.84×10^{-59}	2.23×10^{-67}	5.64×10^{-7}
3.70	1.72×10^{13}	0.	0.	0.	0.	0.	0.	0.	0.	0.	0.	0.
4.22	4.33×10^{13}	0.	0.	0.	0.	0.	0.	0.	0.	0.	0.	0.
4.70	2.27×10^{13}	0.	0.	0.	0.	0.	0.	0.	0.	0.	0.	0.
5.25	5.97×10^{12}	0.	0.	0.	0.	0.	0.	0.	0.	0.	0.	0.
Total	4.28×10^{15}	6.15×10^{13}	2.64×10^{13}	1.64×10^{13}	1.21×10^{13}	9.40×10^{12}	7.52×10^{12}	6.22×10^{12}	5.29×10^{12}	4.61×10^{12}	4.10×10^{12}	3.72×10^{12}

$4.36 \cdot 10^{15}$

Table 7-1c. Westinghouse 15 x 15 Photon Spectrum
45000 MWD/MTU, 3 Cycles
59.43 MWD Average Burn-up
4.13 w/o U-235 Initial Enrichment

Twelve Group Energy Release Rates (MeV/sec) based on 1 cm of Active Fuel Length

E_{mean} (MeV)	Initial	150 Day	1 Year	2 Years	3 Years	4 Years	5 Years	6 Years	7 Years	8 Years	9 years	10 years
0.30	4.10×10^{14}	1.74×10^{12}	8.97×10^{11}	4.36×10^{11}	2.48×10^{11}	1.68×10^{11}	1.32×10^{11}	1.14×10^{11}	1.05×10^{11}	9.86×10^{10}	9.42×10^{10}	9.06×10^{10}
0.63	1.68×10^{15}	7.20×10^{13}	3.14×10^{13}	1.99×10^{13}	1.49×10^{13}	1.15×10^{13}	9.18×10^{12}	7.52×10^{12}	6.33×10^{12}	5.47×10^{12}	4.83×10^{12}	4.35×10^{12}
1.10	1.04×10^{15}	2.06×10^{12}	1.49×10^{12}	1.10×10^{12}	8.56×10^{11}	7.01×10^{11}	5.92×10^{11}	5.13×10^{11}	4.51×10^{11}	4.02×10^{11}	3.62×10^{11}	3.27×10^{11}
1.55	9.50×10^{14}	1.28×10^{12}	8.82×10^{11}	5.47×10^{11}	3.58×10^{11}	2.43×10^{11}	1.68×10^{11}	1.19×10^{11}	8.45×10^{10}	6.07×10^{10}	4.39×10^{10}	3.20×10^{10}
1.99	2.43×10^{14}	7.21×10^{11}	4.20×10^{11}	1.73×10^{11}	7.09×10^{10}	2.92×10^{10}	1.21×10^{10}	5.02×10^{09}	2.13×10^{09}	9.38×10^{08}	4.48×10^{08}	2.46×10^{08}
2.38	2.37×10^{14}	2.72×10^{09}	2.33×10^{04}	5.89×10^{-05}	1.49×10^{-13}	3.75×10^{-22}	9.47×10^{-31}	2.39×10^{-39}	6.04×10^{-48}	1.52×10^{-56}	3.85×10^{-65}	9.72×10^{-74}
2.75	1.19×10^{14}	4.72×10^{07}	4.04×10^{02}	1.02×10^{-06}	2.58×10^{-15}	6.50×10^{-24}	1.64×10^{-32}	4.15×10^{-41}	1.05×10^{-49}	2.64×10^{-58}	6.67×10^{-67}	1.68×10^{-75}
3.25	2.83×10^{14}	1.86×10^{07}	1.59×10^{02}	4.02×10^{-07}	1.01×10^{-15}	2.56×10^{-24}	6.47×10^{-33}	1.63×10^{-41}	4.12×10^{-50}	1.04×10^{-58}	2.63×10^{-67}	6.64×10^{-76}
3.70	2.07×10^{13}	0.	0.	0.	0.	0.	0.	0.	0.	0.	0.	0.
4.22	5.20×10^{13}	0.	0.	0.	0.	0.	0.	0.	0.	0.	0.	0.
4.70	2.72×10^{13}	0.	0.	0.	0.	0.	0.	0.	0.	0.	0.	0.
5.25	7.18×10^{12}	0.	0.	0.	0.	0.	0.	0.	0.	0.	0.	0.
Total	5.06×10^{15}	7.78×10^{13}	3.51×10^{13}	2.22×10^{13}	1.64×10^{13}	1.27×10^{13}	1.01×10^{13}	8.27×10^{12}	6.97×10^{12}	6.03×10^{12}	5.33×10^{12}	4.80×10^{12}

Table 7-1d. Westinghouse 15 x 15 Photon Spectrum
55000 MWD/MTU, 4 Cycles
73.60 MWD Average Burn-up
4.76 w/o U-235 Initial Enrichment

Twelve Group Energy Release Rates (MeV/sec) based on 1 cm of Active Fuel Length

E_{mean} (MeV)	Initial	150 Day	1 Year	2 Years	3 Years	4 Years	5 Years	6 Years	7 Years	8 Years	9 years	10 years
0.30	4.24×10^{14}	1.84×10^{12}	9.54×10^{11}	4.75×10^{11}	2.79×10^{11}	1.94×10^{11}	1.56×10^{11}	1.37×10^{11}	1.27×10^{11}	1.20×10^{11}	1.14×10^{11}	1.10×10^{11}
0.63	1.74×10^{15}	8.34×10^{13}	4.01×10^{13}	2.63×10^{13}	1.96×10^{13}	1.51×10^{13}	1.20×10^{13}	9.74×10^{12}	8.13×10^{12}	6.97×10^{12}	6.11×10^{12}	5.48×10^{12}
1.10	1.07×10^{15}	2.56×10^{12}	1.89×10^{12}	1.40×10^{12}	1.09×10^{12}	8.97×10^{11}	7.58×10^{11}	6.55×10^{11}	5.76×10^{11}	5.12×10^{11}	4.60×10^{11}	4.16×10^{11}
1.55	9.69×10^{14}	1.64×10^{12}	1.15×10^{12}	7.24×10^{11}	4.79×10^{11}	3.27×10^{11}	2.28×10^{11}	1.61×10^{11}	1.15×10^{11}	8.23×10^{10}	5.94×10^{10}	4.32×10^{10}
1.99	2.50×10^{14}	7.51×10^{11}	4.36×10^{11}	1.79×10^{11}	7.36×10^{10}	3.03×10^{10}	1.25×10^{10}	5.22×10^{09}	2.22×10^{09}	9.91×10^{08}	4.83×10^{08}	2.73×10^{08}
2.38	2.40×10^{14}	2.79×10^{09}	2.39×10^{04}	6.03×10^{-05}	1.52×10^{-13}	3.84×10^{-22}	9.70×10^{-31}	2.45×10^{-39}	6.18×10^{-48}	1.56×10^{-56}	3.94×10^{-65}	9.95×10^{-74}
2.75	1.20×10^{14}	4.83×10^{07}	4.14×10^{02}	1.04×10^{-06}	2.64×10^{-15}	6.66×10^{-24}	1.68×10^{-32}	4.25×10^{-41}	1.07×10^{-49}	2.71×10^{-58}	6.83×10^{-67}	1.73×10^{-75}
3.25	2.97×10^{14}	1.90×10^{07}	1.63×10^{02}	4.12×10^{-07}	1.04×10^{-15}	2.62×10^{-24}	6.62×10^{-33}	1.67×10^{-41}	4.22×10^{-50}	1.07×10^{-58}	2.69×10^{-67}	6.80×10^{-76}
3.70	2.03×10^{13}	0.	0.	0.	0.	0.	0.	0.	0.	0.	0.	0.
4.22	5.08×10^{13}	0.	0.	0.	0.	0.	0.	0.	0.	0.	0.	0.
4.70	2.67×10^{13}	0.	0.	0.	0.	0.	0.	0.	0.	0.	0.	0.
5.25	7.01×10^{12}	0.	0.	0.	0.	0.	0.	0.	0.	0.	0.	0.
Total	5.21×10^{15}	9.02×10^{13}	4.15×10^{13}	2.91×10^{13}	2.16×10^{13}	1.66×10^{13}	1.31×10^{13}	1.07×10^{13}	8.95×10^{12}	7.68×10^{12}	6.75×10^{12}	6.05×10^{12}

$\frac{\gamma}{.8 MeV} \Rightarrow 2.38 \cdot 10^{18} \frac{\gamma}{sec\ cm}$

$7.61 \cdot 10^{15}$

$6.05 \cdot 10^{12} \frac{MeV}{sec} \cdot \frac{\gamma}{.63 MeV} (366 cm)$

$\Rightarrow 3.5 \cdot 10^{15}$

Table 7-1e. Westinghouse 15 x 15 Average Neutron Source

Time After Discharge	n/sec per cm of Active Fuel Length		
	35 GWD/MTU	45 GWD/MTU	55 GWD/MTU
150 days	1.26×10^6	1.98×10^6	3.68×10^6
1 year	1.07×10^6	1.71×10^6	3.28×10^6
2 years	9.42×10^5	1.53×10^6	2.99×10^6
3 years	8.89×10^5	1.45×10^6	2.84×10^6
4 years	8.53×10^5	1.39×10^6	2.73×10^6
5 years	8.22×10^5	1.34×10^6	2.62×10^6
6 years	7.92×10^5	1.29×10^6	2.52×10^6
7 years	7.63×10^5	1.24×10^6	2.43×10^6
8 years	7.36×10^5	1.20×10^6	2.34×10^6
9 years	7.09×10^5	1.15×10^6	2.26×10^6
10 years	6.84×10^5	1.11×10^6	2.17×10^6

I think these numbers are Kw/assembly

Table 7-1f. Westinghouse 15 x 15 Decay Heat

Time After Discharge	Decay Heat (kw)		
	35 GWD/MTU	45 GWD/MTU	55 GWD/MTU
150 days	10.0	12.3	14.0
1 year	5.31	6.57	7.81
2 years	2.88	3.65	4.58
3 years	1.86	2.41	3.09
4 years	1.34	1.78	2.33
5 years	1.07	1.43	1.90
6 years	0.904	1.22	1.64
7 years	0.804	1.09	1.46
8 years	0.738	0.997	1.35
9 years	0.689	0.933	1.26
10 years	0.651	0.803	1.19

Table 7-1g. Westinghouse 15 x 15 Tritium Production

Time After Discharge	Curies/Assembly		
	35 GWD/MTU	45 GWD/MTU	55 GWD/MTU
150 days	290	356	435
1 year	281	345	421
2 years	265	326	399
3 years	251	308	377
4 years	237	291	356
5 years	224	275	337
6 years	212	260	318
7 years	200	246	301
8 years	189	232	284
9 years	179	220	268
10 years	169	208	254
Fission Product Volume at Discharge (l/assy @ STP)	0.0715	0.0913	0.113

Table 7-1h. Westinghouse 15 x 15 Krypton-85 Production

Time After Discharge	Curies/Assembly		
	35 GWD/MTU	45 GWD/MTU	55 GWD/MTU
150 days	4650	5890	7020
1 year	4460	5670	6770
2 years	4210	5300	6360
3 years	3910	4970	5960
4 years	3690	4680	5600
5 years	3450	4390	5230
6 years	3230	4100	4900
7 years	3030	3840	4610
8 years	2840	3610	4320
9 years	2660	3380	4020
10 years	2500	3170	3800
Fission Product Volume at Discharge (l/assy @ STP)	16.7	21.9	27.4

Table 7-1i. Westinghouse 15 x 15 Xenon-131m Production

Time After Discharge	Curies/Assembly 35 GWD/MTU	45 GWD/MTU	55 GWD/MTU
150 days	1.58	1.85	1.86
1 year	6.29×10^{-6}	7.85×10^{-6}	7.39×10^{-6}
2 years	4.24×10^{-15}	4.97×10^{-15}	5.01×10^{-15}
3 years	2.86×10^{-24}	3.35×10^{-24}	3.38×10^{-21}
4 years	1.94×10^{-33}	2.26×10^{-33}	2.28×10^{-33}
5 years	1.31×10^{-42}	1.53×10^{-42}	1.54×10^{-42}
6 years	8.82×10^{-52}	1.03×10^{-51}	1.04×10^{-51}
7 years	5.96×10^{-61}	6.99×10^{-61}	7.02×10^{-61}
8 years	4.02×10^{-70}	4.72×10^{-70}	4.76×10^{-70}
9 years	2.72×10^{-79}	3.18×10^{-79}	3.20×10^{-79}
10 years	1.84×10^{-88}	2.15×10^{-86}	2.17×10^{-88}
Fission Product Volume at Discharge (l/assy @ STP)	155.00	206.00	259.00

numbers are suspect.

Table 7-2a. Westinghouse 17 x 17 Fuel Physical Parameters

Parameter	Value
Array configuration	17 x 17
Rod pitch, in.	0.496
Fuel composition	UO_2
Fuel density, %th	.95
Fuel pin outside diameter, in.	.374
No. of pins per assembly	264
Cladding thickness, in.	.0225
Cladding material	Zirc-4
Assembly outside dimensions, in. x in.	8.426 x 8.426
Assembly length, in.	159.763
Active fuel length, in.	144
Axial location of fuel, in. from top	12.3
Representative weight/assembly, kg	665
Initial U content/assembly, kg	461.4
Tie plate smear thicknesses in. upper/in. lower	.41/.55
Time between cycles, days*	50
Time average power for each assembly, MW*	17.5
Assembly irradiation growth, in.	0.7

*Nominal

Table 7-2b. Westinghouse 17 x 17 Photon Spectrum
35000 MWD/MTU, 4 Cycles
47.40 MWD Average Burn-up
3.21 w/o U-235 Initial Enrichment

Twelve Group Energy Release Rates (MeV/sec) based on 1 cm of Active Fuel Length

E_{mean} (MeV)	Initial	150 Day	1 Year	2 Years	3 Years	4 Years	5 Years	6 Years	7 Years	8 Years	9 years	10 years
0.30	3.76×10^{14}	1.57×10^{12}	8.01×10^{11}	3.83×10^{11}	2.12×10^{11}	1.40×10^{11}	1.07×10^{11}	9.19×10^{10}	8.36×10^{10}	7.85×10^{10}	7.48×10^{10}	7.19×10^{10}
0.63	1.53×10^{15}	6.00×10^{13}	2.42×10^{13}	1.50×10^{13}	1.12×10^{13}	8.70×10^{12}	6.96×10^{12}	5.74×10^{12}	4.87×10^{12}	4.24×10^{12}	3.77×10^{12}	3.42×10^{12}
1.10	9.48×10^{14}	1.65×10^{12}	1.18×10^{12}	8.55×10^{11}	6.63×10^{11}	5.40×10^{11}	4.56×10^{11}	3.95×10^{11}	3.48×10^{11}	3.10×10^{11}	2.79×10^{11}	2.53×10^{11}
1.55	8.72×10^{14}	9.95×10^{11}	6.73×10^{11}	4.10×10^{11}	2.65×10^{11}	1.78×10^{11}	1.23×10^{11}	8.61×10^{10}	6.12×10^{10}	4.39×10^{10}	3.18×10^{10}	2.32×10^{10}
1.99	2.22×10^{14}	6.59×10^{11}	3.82×10^{11}	1.57×10^{11}	6.45×10^{10}	2.65×10^{10}	1.09×10^{10}	4.55×10^{09}	1.92×10^{09}	8.39×10^{08}	3.94×10^{08}	2.11×10^{08}
2.38	2.17×10^{14}	2.50×10^{09}	2.14×10^{04}	5.41×10^{-05}	1.37×10^{-13}	3.45×10^{-22}	8.71×10^{-31}	2.20×10^{-39}	5.55×10^{-48}	1.40×10^{-56}	3.54×10^{-65}	8.93×10^{-74}
2.75	1.09×10^{14}	4.34×10^{07}	3.71×10^{02}	9.38×10^{-07}	2.37×10^{-15}	5.98×10^{-24}	1.51×10^{-32}	3.81×10^{-41}	9.62×10^{-50}	2.43×10^{-58}	6.13×10^{-67}	1.55×10^{-75}
3.25	2.61×10^{14}	1.71×10^{07}	1.46×10^{02}	3.69×10^{-07}	9.33×10^{-16}	2.35×10^{-24}	5.95×10^{-33}	1.50×10^{-41}	3.79×10^{-50}	9.57×10^{-59}	2.42×10^{-67}	6.10×10^{-76}
3.70	1.89×10^{13}	0.	0.	0.	0.	0.	0.	0.	0.	0.	0.	0.
4.22	4.76×10^{13}	0.	0.	0.	0.	0.	0.	0.	0.	0.	0.	0.
4.70	2.49×10^{13}	0.	0.	0.	0.	0.	0.	0.	0.	0.	0.	0.
5.25	6.57×10^{12}	0.	0.	0.	0.	0.	0.	0.	0.	0.	0.	0.
Total	4.63×10^{15}	6.48×10^{13}	2.72×10^{13}	1.68×10^{13}	1.24×10^{13}	9.58×10^{12}	7.66×10^{12}	6.32×10^{12}	5.37×10^{12}	4.67×10^{12}	4.15×10^{12}	3.77×10^{12}

Table 7-2c. Westinghouse 17 x 17 Photon Spectrum
45000 MWD/MTU, 3 Cycles
59.67 MWD Average Burn-up
4.14 w/o U-235 Initial Enrichment

Twelve Group Energy Release Rates (MeV/sec) based on 1 cm of Active Fuel Length

E_{mean} (MeV)	Initial	150 Day	1 Year	2 Years	3 Years	4 Years	5 Years	6 Years	7 Years	8 Years	9 years	10 years
0.30	4.60×10^{14}	1.91×10^{12}	9.74×10^{11}	4.68×10^{11}	2.62×10^{11}	1.74×10^{11}	1.35×10^{11}	1.16×10^{11}	1.06×10^{11}	1.00×10^{11}	9.55×10^{10}	9.18×10^{10}
0.63	1.88×10^{15}	7.79×10^{13}	3.28×10^{13}	2.06×10^{13}	1.54×10^{13}	1.18×10^{13}	9.41×10^{12}	7.69×10^{12}	6.46×10^{12}	5.56×10^{12}	4.91×10^{12}	4.42×10^{12}
1.10	1.16×10^{15}	2.15×10^{12}	1.55×10^{12}	1.13×10^{12}	8.80×10^{11}	7.18×10^{11}	6.06×10^{11}	5.24×10^{11}	4.61×10^{11}	4.10×10^{11}	3.69×10^{11}	3.34×10^{11}
1.55	1.07×10^{15}	1.35×10^{12}	9.24×10^{11}	5.71×10^{11}	3.73×10^{11}	2.52×10^{11}	1.75×10^{11}	1.23×10^{11}	8.75×10^{10}	6.28×10^{10}	4.54×10^{10}	3.31×10^{10}
1.99	2.73×10^{14}	7.92×10^{11}	4.62×10^{11}	1.90×10^{11}	7.79×10^{10}	3.21×10^{10}	1.32×10^{10}	5.50×10^{09}	2.33×10^{09}	1.02×10^{09}	4.83×10^{08}	2.61×10^{08}
2.38	2.67×10^{14}	3.06×10^{09}	2.62×10^{04}	6.62×10^{-05}	1.67×10^{-13}	4.22×10^{-22}	1.07×10^{-30}	2.69×10^{-39}	6.79×10^{-48}	1.71×10^{-56}	4.33×10^{-65}	1.09×10^{-73}
2.75	1.34×10^{14}	5.30×10^{07}	4.55×10^{02}	1.15×10^{-06}	2.90×10^{-15}	7.32×10^{-24}	1.85×10^{-32}	4.66×10^{-41}	1.18×10^{-49}	2.97×10^{-58}	7.50×10^{-67}	1.89×10^{-75}
3.25	3.16×10^{14}	2.09×10^{07}	1.79×10^{02}	4.52×10^{-07}	1.14×10^{-15}	2.88×10^{-24}	7.28×10^{-33}	1.84×10^{-41}	4.64×10^{-50}	1.17×10^{-58}	2.96×10^{-67}	7.46×10^{-76}
3.70	2.35×10^{13}	0.	0.	0.	0.	0.	0.	0.	0.	0.	0.	0.
4.22	5.91×10^{13}	0.	0.	0.	0.	0.	0.	0.	0.	0.	0.	0.
4.70	3.09×10^{13}	0.	0.	0.	0.	0.	0.	0.	0.	0.	0.	0.
5.25	8.16×10^{12}	0.	0.	0.	0.	0.	0.	0.	0.	0.	0.	0.
Total	5.69×10^{15}	8.41×10^{13}	3.67×10^{13}	2.30×10^{13}	1.70×10^{13}	1.30×10^{13}	1.03×10^{13}	8.46×10^{12}	7.12×10^{12}	6.14×10^{12}	5.42×10^{12}	4.87×10^{12}

Table 7-2d. Westinghouse 17 x 17 Photon Spectrum
55000 MWD/MTU, 4 Cycles
74.12 MWD Average Burn-up
4.77 w/o U-235 Initial Enrichment

Twelve Group Energy Release Rates (MeV/sec) based on 1 cm of Active Fuel Length

E_{mean} (MeV)	Initial	150 Day	1 Year	2 Years	3 Years	4 Years	5 Years	6 Years	7 Years	8 Years	9 years	10 years
0.30	4.48×10^{14}	1.92×10^{12}	9.89×10^{11}	4.90×10^{11}	2.86×10^{11}	1.98×10^{11}	1.58×10^{11}	1.38×10^{11}	1.28×10^{11}	1.20×10^{11}	1.15×10^{11}	1.11×10^{11}
0.63	1.83×10^{15}	8.69×10^{13}	4.15×10^{13}	2.71×10^{13}	2.02×10^{13}	1.55×10^{13}	1.23×10^{13}	9.96×10^{12}	8.30×10^{12}	7.10×10^{12}	6.22×10^{12}	5.56×10^{12}
1.10	1.13×10^{15}	2.65×10^{12}	1.95×10^{12}	1.44×10^{12}	1.13×10^{12}	9.23×10^{11}	7.80×10^{11}	6.74×10^{11}	5.92×10^{11}	5.26×10^{11}	4.72×10^{11}	4.27×10^{11}
1.55	1.02×10^{15}	1.70×10^{12}	1.19×10^{12}	7.51×10^{11}	4.96×10^{11}	3.38×10^{11}	2.36×10^{11}	1.66×10^{11}	1.19×10^{11}	8.50×10^{10}	6.14×10^{10}	4.46×10^{10}
1.99	2.63×10^{14}	7.83×10^{11}	4.54×10^{11}	1.87×10^{11}	7.67×10^{10}	3.16×10^{10}	1.30×10^{10}	5.44×10^{09}	2.31×10^{09}	1.03×10^{09}	4.99×10^{08}	2.80×10^{08}
2.38	2.94×10^{16}	2.54×10^{09}	2.52×10^{04}	6.37×10^{-05}	1.61×10^{-13}	4.06×10^{-22}	1.02×10^{-30}	2.59×10^{-39}	6.53×10^{-48}	1.65×10^{-56}	4.16×10^{-65}	1.05×10^{-73}
2.75	1.27×10^{14}	5.10×10^{07}	4.37×10^{02}	1.10×10^{-06}	2.79×10^{-15}	7.03×10^{-24}	1.78×10^{-32}	4.48×10^{-41}	1.13×10^{-49}	2.86×10^{-58}	7.21×10^{-67}	1.82×10^{-75}
3.25	3.14×10^{14}	2.01×10^{07}	1.72×10^{02}	4.35×10^{-07}	1.10×10^{-15}	2.77×10^{-24}	6.99×10^{-33}	1.77×10^{-41}	4.46×10^{-50}	1.13×10^{-58}	2.84×10^{-67}	7.18×10^{-76}
3.70	2.14×10^{13}	0.	0.	0.	0.	0.	0.	0.	0.	0.	0.	0.
4.22	5.37×10^{13}	0.	0.	0.	0.	0.	0.	0.	0.	0.	0.	0.
4.70	2.82×10^{13}	0.	0.	0.	0.	0.	0.	0.	0.	0.	0.	0.
5.25	7.40×10^{12}	0.	0.	0.	0.	0.	0.	0.	0.	0.	0.	0.
Total	5.50×10^{15}	9.40×10^{13}	4.61×10^{13}	2.99×10^{13}	2.22×10^{13}	1.70×10^{13}	1.35×10^{13}	1.09×10^{13}	9.14×10^{12}	7.84×10^{12}	6.87×10^{12}	6.15×10^{12}

Table 7-2e. Westinghouse 17 x 17 Average Neutron Source

Time After Discharge	n/sec per cm of Active Fuel Length		
	35 GWD/MTU	45 GWD/MTU	55 GWD/MTU
150 days	1.22×10^6	1.93×10^6	3.84×10^6
1 year	1.03×10^6	1.67×10^6	3.43×10^6
2 years	9.08×10^5	1.49×10^6	3.13×10^6
3 years	8.57×10^5	1.41×10^6	2.97×10^6
4 years	8.22×10^5	1.36×10^6	2.85×10^6
5 years	7.91×10^5	1.31×10^6	2.74×10^6
6 years	7.63×10^5	1.26×10^6	2.63×10^6
7 years	7.35×10^5	1.21×10^6	2.54×10^6
8 years	7.09×10^5	1.17×10^6	2.44×10^6
9 years	6.83×10^5	1.13×10^6	2.35×10^6
10 years	6.59×10^5	1.09×10^6	2.27×10^6

Table 7-2f. Westinghouse 17 x 17 Decay Heat

Time After Discharge	Decay Heat (kw)		
	35 GWD/MTU	45 GWD/MTU	55 GWD/MTU
150 days	10.5	13.1	14.5
1 year	5.50	6.93	8.11
2 years	2.97	3.83	4.68
3 years	1.90	2.50	3.18
4 years	1.37	1.83	2.39
5 years	1.08	1.45	1.95
6 years	0.916	1.24	1.68
7 years	0.904	1.10	1.51
8 years	0.836	1.01	1.38
9 years	0.786	0.940	1.29
10 years	0.748	0.890	1.22

Table 7-2g. Westinghouse 17 x 17 Tritium Production

Time After Discharge	Curies/Assembly for Burnup (MWD/MTU) 35000	45000	55000
150 days	292	360	440
1 year	282	348	428
2 years	267	329	402
3 years	252	311	380
4 years	238	294	361
5 years	225	278	341
6 years	213	263	323
7 years	202	248	305
8 years	191	235	288
9 years	180	222	273
10 years	170	210	258
Fission Product Volume at Discharge (l/assy @ STP)	0.230	0.284	0.349

Table 7-2h. Westinghouse 17 x 17 Krypton-85 Production

Time After Discharge	Curies/Assembly 35 GWD/MTU	45 GWD/MTU	55 GWD/MTU
150 days	4720	6000	7100
1 year	4540	5780	6840
2 years	4240	5410	6400
3 years	3990	5080	6000
4 years	3730	4760	5630
5 years	3510	4460	5270
6 years	3290	4170	4940
7 years	3080	3910	4650
8 years	2890	3690	4350
9 years	2710	3450	4060
10 years	2540	3230	3800
Fission Product Volume at Discharge (l/assy @ STP)	48.3	62.0	75.4

Table 7-2i. Westinghouse 17 x 17 Xenon-131m Production

Time After Discharge	Curies/Assembly 35 GWD/MTU	45 GWD/MTU	55 GWD/MTU
150 days	1.70	2.07	1.96
1 year	6.77×10^{-6}	8.23×10^{-6}	7.79×10^{-6}
2 years	4.57×10^{-15}	5.56×10^{-15}	5.28×10^{-15}
3 years	3.08×10^{-24}	3.17×10^{-24}	3.56×10^{-24}
4 years	2.08×10^{-33}	2.53×10^{-33}	2.40×10^{-33}
5 years	1.40×10^{-42}	1.71×10^{-42}	1.62×10^{-42}
6 years	9.51×10^{-52}	1.16×10^{-51}	1.10×10^{-51}
7 years	6.40×10^{-61}	7.79×10^{-61}	7.43×10^{-61}
8 years	4.32×10^{-70}	5.27×10^{-70}	5.01×10^{-70}
9 years	2.93×10^{-79}	3.56×10^{-79}	3.38×10^{-79}
10 years	1.98×10^{-88}	2.41×10^{-86}	2.28×10^{-88}
Fission Product Volume at Discharge (l/assy @ STP)	478.00	594.00	736.00

Table 7-3a. Westinghouse 17 x 17 OFA Fuel Physical Parameters

Parameter	Value
Array configuration	17 x 17 OFA
Rod pitch, in.	0.496
Fuel composition	UO_2
Fuel density, %th	.95
Fuel pin outside diameter, in.	.360
No. of pins per assembly	264
Cladding thickness, in.	.0225
Cladding material	Zirc-4
Assembly outside dimensions, in. x in.	8.426 x 8.426
Assembly length, in.	159.765
Active fuel length, in.	144
Axial location of fuel, in. from top	12.3
Representative weight/assembly, kg	626
Initial U content/assembly, kg	423.0
Tie plate smear thicknesses in. upper/in. lower	.41/.55
Time between cycles, days*	50
Time average power for each assembly, MW*	17.5
Assembly irradiation growth, in	0.7

*Nominal

Table 7-3b. Westinghouse 17 x 17 OFA Photon Spectrum
35000 MWD/MTU, 4 Cycles
43.42 MWD Average Burn-up
3.13 w/o U-235 Initial Enrichment

Twelve Group Energy Release Rates (MeV/sec) based on 1 cm of Active Fuel Length

E_{mean} (MeV)	Initial	150 Day	1 Year	2 Years	3 Years	4 Years	5 Years	6 Years	7 Years	8 Years	9 years	10 years
0.30	3.03×10^{14}	1.31×10^{12}	6.73×10^{11}	3.26×10^{11}	1.84×10^{11}	1.23×10^{11}	9.59×10^{10}	8.28×10^{10}	7.57×10^{10}	7.12×10^{10}	6.80×10^{10}	6.53×10^{10}
0.63	1.23×10^{15}	5.02×10^{13}	2.10×10^{13}	1.32×10^{13}	9.89×10^{12}	7.71×10^{12}	6.20×10^{12}	5.13×10^{12}	4.36×10^{12}	3.81×10^{12}	3.40×10^{12}	3.09×10^{12}
1.10	7.61×10^{14}	1.43×10^{12}	1.03×10^{12}	7.52×10^{11}	5.85×10^{11}	4.78×10^{11}	4.04×10^{11}	3.50×10^{11}	3.09×10^{11}	2.76×10^{11}	2.49×10^{11}	2.25×10^{11}
1.55	6.99×10^{14}	8.53×10^{11}	5.80×10^{11}	3.55×10^{11}	2.30×10^{11}	1.55×10^{11}	1.07×10^{11}	7.51×10^{10}	5.34×10^{10}	3.84×10^{10}	2.78×10^{10}	2.03×10^{10}
1.99	1.78×10^{14}	5.43×10^{11}	3.17×10^{11}	1.30×10^{11}	5.35×10^{10}	2.20×10^{10}	9.10×10^{09}	3.78×10^{09}	1.60×10^{09}	7.04×10^{08}	3.34×10^{08}	1.82×10^{08}
2.38	1.74×10^{14}	2.01×10^{09}	1.72×10^{04}	4.34×10^{-05}	1.10×10^{-13}	2.77×10^{-22}	6.99×10^{-31}	1.76×10^{-39}	4.45×10^{-48}	1.12×10^{-56}	2.84×10^{-65}	7.17×10^{-74}
2.75	8.72×10^{13}	3.48×10^{07}	2.98×10^{02}	7.52×10^{-07}	1.90×10^{-15}	4.80×10^{-24}	1.21×10^{-32}	3.06×10^{-41}	7.72×10^{-50}	1.95×10^{-58}	4.92×10^{-67}	1.24×10^{-75}
3.25	2.10×10^{14}	1.37×10^{07}	1.17×10^{02}	2.96×10^{-07}	7.48×10^{-16}	1.89×10^{-24}	4.77×10^{-33}	1.20×10^{-41}	3.04×10^{-50}	7.68×10^{-59}	1.94×10^{-67}	4.89×10^{-76}
3.70	1.51×10^{13}	0.	0.	0.	0.	0.	0.	0.	0.	0.	0.	0.
4.22	3.78×10^{13}	0.	0.	0.	0.	0.	0.	0.	0.	0.	0.	0.
4.70	1.98×10^{13}	0.	0.	0.	0.	0.	0.	0.	0.	0.	0.	0.
5.25	5.22×10^{12}	0.	0.	0.	0.	0.	0.	0.	0.	0.	0.	0.
Total	3.72×10^{15}	5.43×10^{13}	2.36×10^{13}	1.47×10^{13}	1.09×10^{13}	8.49×10^{12}	6.81×10^{12}	5.64×10^{12}	4.80×10^{12}	4.19×10^{12}	3.74×10^{12}	3.40×10^{12}

Table 7-3c. Westinghouse 17 x 17 OFA Photon Spectrum
45000 MWD/MTU, 3 Cycles
54.72 MWD Average Burn-up
4.14 w/o U-235 Initial Enrichment

Twelve Group Energy Release Rates (MeV/sec) based on 1 cm of Active Fuel Length

E_{mean} (MeV)	Initial	150 Day	1 Year	2 Years	3 Years	4 Years	5 Years	6 Years	7 Years	8 Years	9 years	10 years
0.30	3.75×10^{14}	1.60×10^{12}	8.23×10^{11}	4.01×10^{11}	2.28×10^{11}	1.54×10^{11}	1.21×10^{11}	1.05×10^{11}	9.65×10^{10}	9.10×10^{10}	8.69×10^{10}	8.35×10^{10}
0.63	1.53×10^{15}	6.58×10^{13}	2.86×10^{13}	1.82×10^{13}	1.36×10^{13}	1.05×10^{13}	8.39×10^{12}	6.88×10^{12}	5.80×10^{12}	5.01×10^{12}	4.43×10^{12}	3.99×10^{12}
1.10	9.49×10^{14}	1.87×10^{12}	1.36×10^{12}	9.97×10^{11}	7.80×10^{11}	6.38×10^{11}	5.39×10^{11}	4.67×10^{11}	4.11×10^{11}	3.66×10^{11}	3.29×10^{11}	2.98×10^{11}
1.55	8.70×10^{14}	1.16×10^{12}	8.02×10^{11}	4.98×10^{11}	3.26×10^{11}	2.21×10^{11}	1.53×10^{11}	1.08×10^{11}	7.69×10^{10}	5.52×10^{10}	3.99×10^{10}	2.91×10^{10}
1.99	2.23×10^{14}	6.62×10^{11}	3.86×10^{11}	1.58×10^{11}	6.51×10^{10}	2.68×10^{10}	1.11×10^{10}	4.60×10^{09}	1.95×10^{09}	8.61×10^{08}	4.12×10^{08}	2.26×10^{08}
2.38	2.17×10^{14}	2.49×10^{09}	2.13×10^{04}	5.39×10^{-05}	1.36×10^{-13}	3.44×10^{-22}	8.67×10^{-31}	2.19×10^{-39}	5.53×10^{-48}	1.40×10^{-56}	3.52×10^{-65}	8.90×10^{-7}
2.75	1.09×10^{14}	4.32×10^{07}	3.70×10^{02}	9.34×10^{-07}	2.36×10^{-15}	5.95×10^{-24}	1.50×10^{-32}	3.80×10^{-41}	9.58×10^{-50}	2.42×10^{-58}	6.11×10^{-67}	1.54×10^{-7}
3.25	2.59×10^{14}	1.70×10^{07}	1.46×10^{02}	3.68×10^{-07}	9.29×10^{-16}	2.35×10^{-24}	5.92×10^{-33}	1.50×10^{-41}	3.78×10^{-50}	9.53×10^{-59}	2.41×10^{-67}	6.08×10^{-7}
3.70	1.90×10^{13}	0.	0.	0.	0.	0.	0.	0.	0.	0.	0.	0.
4.22	4.77×10^{13}	0.	0.	0.	0.	0.	0.	0.	0.	0.	0.	0.
4.70	2.50×10^{13}	0.	0.	0.	0.	0.	0.	0.	0.	0.	0.	0.
5.25	6.58×10^{12}	0.	0.	0.	0.	0.	0.	0.	0.	0.	0.	0.
Total	4.63×10^{15}	7.11×10^{13}	3.20×10^{13}	2.02×10^{13}	1.50×10^{13}	1.16×10^{13}	9.22×10^{12}	7.57×10^{12}	6.38×10^{12}	5.52×10^{12}	4.88×10^{12}	4.41×10^{12}

Table 7-3d. Westinghouse 17 x 17 OFA Photon Spectrum
55000 MWD/MTU, 4 Cycles
67.91 MWD Average Burn-up
4.73 w/o U-235 Initial Enrichment

Twelve Group Energy Release Rates (MeV/sec) based on 1 cm of Active Fuel Length

E_{mean} (MeV)	Initial	150 Day	1 Year	2 Years	3 Years	4 Years	5 Years	6 Years	7 Years	8 Years	9 years	10 years
0.30	3.66×10^{14}	1.61×10^{12}	8.37×10^{11}	4.20×10^{11}	2.49×10^{11}	1.76×10^{11}	1.42×10^{11}	1.25×10^{11}	1.16×10^{11}	1.10×10^{11}	1.05×10^{11}	1.01×10^{11}
0.63	1.50×10^{15}	7.35×10^{13}	3.59×10^{13}	2.37×10^{13}	1.77×10^{13}	1.37×10^{13}	1.08×10^{13}	8.83×10^{12}	7.39×10^{12}	6.35×10^{12}	5.58×10^{12}	5.01×10^{12}
1.10	9.20×10^{14}	2.28×10^{12}	1.70×10^{12}	1.26×10^{12}	9.88×10^{11}	8.10×10^{11}	6.85×10^{11}	5.93×10^{11}	5.22×10^{11}	4.64×10^{11}	4.17×10^{11}	3.77×10^{11}
1.55	8.36×10^{14}	1.95×10^{12}	1.03×10^{12}	6.47×10^{11}	4.28×10^{11}	2.93×10^{11}	2.04×10^{11}	1.44×10^{11}	1.03×10^{11}	7.38×10^{10}	5.34×10^{10}	3.88×10^{10}
1.99	2.15×10^{14}	6.53×10^{11}	3.79×10^{11}	1.55×10^{11}	6.39×10^{10}	2.63×10^{10}	1.09×10^{10}	4.54×10^{09}	1.94×10^{09}	8.68×10^{08}	4.27×10^{08}	2.44×10^{08}
2.38	2.06×10^{14}	2.40×10^{07}	2.06×10^{04}	5.20×10^{-05}	1.31×10^{-13}	3.31×10^{-22}	8.37×10^{-31}	2.11×10^{-39}	5.33×10^{-48}	1.35×10^{-56}	3.40×10^{-65}	8.58×10^{-74}
2.75	1.03×10^{14}	4.17×10^{07}	3.57×10^{02}	9.01×10^{-07}	2.28×10^{-15}	5.74×10^{-24}	1.45×10^{-32}	3.66×10^{-41}	9.25×10^{-50}	2.33×10^{-58}	5.89×10^{-67}	1.49×10^{-75}
3.25	2.57×10^{14}	1.64×10^{07}	1.41×10^{02}	3.55×10^{-07}	8.96×10^{-16}	2.26×10^{-24}	5.71×10^{-33}	1.44×10^{-41}	3.64×10^{-50}	9.20×10^{-59}	2.32×10^{-67}	5.86×10^{-76}
3.70	1.74×10^{13}	0.	0.	0.	0.	0.	0.	0.	0.	0.	0.	0.
4.22	4.36×10^{13}	0.	0.	0.	0.	0.	0.	0.	0.	0.	0.	0.
4.70	2.29×10^{13}	0.	0.	0.	0.	0.	0.	0.	0.	0.	0.	0.
5.25	6.02×10^{12}	0.	0.	0.	0.	0.	0.	0.	0.	0.	0.	0.
Total	4.49×10^{15}	7.95×10^{13}	3.98×10^{13}	2.61×10^{13}	1.94×10^{13}	1.50×10^{13}	1.19×10^{13}	9.70×10^{12}	8.13×10^{12}	7.0×10^{12}	6.15×10^{12}	5.52×10^{12}

Table 7-3e. Westinghouse 17 x 17 OFA Average Neutron Source

Time After Discharge	n/sec per cm of Active Fuel Length		
	35 GWD/MTU	45 GWD/MTU	55 GWD/MTU
150 days	1.11×10^6	1.76×10^6	3.36×10^6
1 year	9.35×10^5	1.52×10^6	3.00×10^6
2 years	8.23×10^5	1.36×10^6	2.74×10^6
3 years	7.77×10^5	1.29×10^6	2.60×10^6
4 years	7.45×10^5	1.24×10^6	2.50×10^6
5 years	7.17×10^5	1.19×10^6	2.40×10^6
6 years	6.91×10^5	1.15×10^6	2.31×10^6
7 years	6.66×10^5	1.11×10^6	2.23×10^6
8 years	6.42×10^5	1.07×10^6	2.14×10^6
9 years	6.19×10^5	1.03×10^6	2.06×10^6
10 years	5.97×10^5	9.92×10^5	1.99×10^6

Table 7-3f. Westinghouse 17 x 17 OFA Decay Heat

Time After Discharge	Decay Heat (kw)		
	35 GWD/MTU	45 GWD/MTU	55 GWD/MTU
150 days	8.83	11.2	12.4
1 year	4.69	6.01	6.93
2 years	2.58	3.34	4.05
3 years	1.66	2.20	2.77
4 years	1.21	1.62	2.10
5 years	0.965	1.31	1.72
6 years	0.822	1.11	1.49
7 years	0.730	0.991	1.33
8 years	0.670	0.909	1.23
9 years	0.629	0.851	1.15
10 years	0.595	0.805	1.09

Table 7-3g. Westinghouse 17 x 17 OFA Tritium Production

Time After Discharge	Curies/Assembly 35 GWD/MTU	45 GWD/MTU	55 GWD/MTU
150 days	264	327	399
1 year	256	316	384
2 years	242	299	364
3 years	229	282	344
4 years	216	267	326
5 years	204	251	308
6 years	193	237	291
7 years	183	226	275
8 years	173	212	260
9 years	163	202	246
10 years	154	191	232
Fission Product Volume at Discharge (l/assy @ STP)	0.209	0.258	0.319

Table 7-3h. Westinghouse 17 x 17 OFA Krypton-85 Production

Time After Discharge	Curies/Assembly 35 GWD/MTU	45 GWD/MTU	55 GWD/MTU
150 days	4280	5450	6440
1 year	4100	5230	6180
2 years	3840	4900	5820
3 years	3610	4610	5460
4 years	3390	4720	5120
5 years	3180	4060	4790
6 years	2980	3080	4500
7 years	2790	3560	4210
8 years	2620	3330	3950
9 years	2450	3120	3690
10 years	2300	2930	3460
Fission Product Volume at Discharge (l/assy @ STP)	44.2	56.8	69.4

Table 7-3i. Westinghouse 17 x 17 OFA Xenon-131m Production

Time After Discharge	Curies/Assembly 35 GWD/MTU	45 GWD/MTU	55 GWD/MTU
150 days	1.37	1.69	1.61
1 year	5.45×10^{-6}	6.73×10^{-6}	6.40×10^{-6}
2 years	3.66×10^{-15}	4.54×10^{-15}	4.32×10^{-15}
3 years	2.48×10^{-24}	3.07×10^{-24}	2.92×10^{-24}
4 years	1.68×10^{-33}	2.07×10^{-33}	1.98×10^{-33}
5 years	1.13×10^{-42}	1.40×10^{-42}	1.33×10^{-42}
6 years	7.65×10^{-52}	9.44×10^{-52}	9.00×10^{-52}
7 years	5.16×10^{-61}	6.36×10^{-61}	6.07×10^{-61}
8 years	3.49×10^{-70}	4.32×10^{-70}	4.10×10^{-70}
9 years	2.36×10^{-79}	2.91×10^{-79}	2.78×10^{-79}
10 years	1.59×10^{-88}	7.96×10^{-88}	1.87×10^{-88}
Fission Product Volume at Discharge (l/assy @ STP)	437.00	544.00	673.00

Table 7-4a. Combustion Engineering 14 x 14 Fuel Physical Parameters

Parameter	Value
Array configuration	14 x 14
Rod pitch, in.	0.580
Fuel composition	UO_2
Fuel density, %th	.945
Fuel pin outside diameter, in.	.44
No. of pins per assembly	176
Cladding thickness, in.	.026
Cladding material	Zirc-4
Assembly outside dimensions, in. x in.	8.4 x 8.4
Assembly length, in.	159.2
Active fuel length, in.	136.7
Axial location of fuel, in. from top	16.3
Representative weight/assembly, kg	581
Initial U content/assembly, kg	388.7
Tie plate smear thicknesses in. upper/in. lower	.26/.33
Time between cycles, days*	50
Time average power for each assembly, MW*	12.5
Assembly irradiation growth, in	0.7

*Nominal

Table 7-4b. Combustion Engineering 14 x 14 Photon Spectrum
35000 MWD/MTU, 4 Cycles
40.46 MWD Average Burn-up
3.03 w/o U-235 Initial Enrichment

Twelve Group Energy Release Rates (MeV/sec) based on 1 cm of Active Fuel Length

E_{mean} (MeV)	Initial	150 Day	1 Year	2 Years	3 Years	4 Years	5 Years	6 Years	7 Years	8 Years	9 years	10 years
0.30	2.64×10^{14}	1.16×10^{12}	6.02×10^{11}	2.93×10^{11}	1.67×10^{11}	1.13×10^{11}	8.83×10^{10}	7.65×10^{10}	7.01×10^{10}	6.60×10^{10}	6.30×10^{10}	6.06×10^{10}
0.63	1.07×10^{15}	4.46×10^{13}	1.90×10^{13}	1.20×10^{13}	9.02×10^{12}	7.04×10^{12}	5.68×10^{12}	4.71×10^{12}	4.02×10^{12}	3.51×10^{12}	3.14×10^{12}	2.86×10^{12}
1.10	6.64×10^{14}	1.31×10^{12}	9.45×10^{11}	6.90×10^{11}	5.39×10^{11}	4.41×10^{11}	3.74×10^{11}	3.24×10^{11}	2.86×10^{11}	2.56×10^{11}	2.31×10^{11}	2.09×10^{11}
1.55	6.10×10^{14}	7.66×10^{11}	5.23×10^{11}	3.20×10^{11}	2.08×10^{11}	1.40×10^{11}	9.66×10^{10}	6.79×10^{10}	4.83×10^{10}	3.47×10^{10}	2.52×10^{10}	1.84×10^{10}
1.99	1.55×10^{14}	4.83×10^{11}	2.82×10^{11}	1.16×10^{11}	4.77×10^{10}	1.96×10^{10}	8.10×10^{09}	3.37×10^{09}	1.43×10^{09}	6.29×10^{08}	3.00×10^{08}	1.64×10^{08}
2.38	1.52×10^{14}	1.75×10^{09}	1.50×10^{04}	3.78×10^{-05}	9.55×10^{-14}	2.41×10^{-22}	6.09×10^{-31}	1.54×10^{-39}	3.88×10^{-48}	9.80×10^{-57}	2.47×10^{-65}	6.25×10^{-74}
2.75	7.61×10^{13}	3.03×10^{07}	2.60×10^{02}	6.56×10^{-07}	1.66×10^{-15}	4.18×10^{-24}	1.06×10^{-32}	2.66×10^{-41}	6.73×10^{-50}	1.70×10^{-58}	4.29×10^{-67}	1.08×10^{-75}
3.25	1.83×10^{14}	1.19×10^{07}	1.02×10^{02}	2.58×10^{-07}	6.52×10^{-16}	1.65×10^{-24}	4.16×10^{-33}	1.05×10^{-41}	2.65×10^{-50}	6.69×10^{-59}	1.69×10^{-67}	4.27×10^{-76}
3.70	1.32×10^{13}	0.	0.	0.	0.	0.	0.	0.	0.	0.	0.	0.
4.22	3.31×10^{13}	0.	0.	0.	0.	0.	0.	0.	0.	0.	0.	0.
4.70	1.73×10^{13}	0.	0.	0.	0.	0.	0.	0.	0.	0.	0.	0.
5.25	4.57×10^{12}	0.	0.	0.	0.	0.	0.	0.	0.	0.	0.	0.
Total	3.25×10^{15}	4.83×10^{13}	2.13×10^{13}	1.34×10^{13}	9.98×10^{12}	7.76×10^{12}	6.24×10^{12}	5.18×10^{12}	4.42×10^{12}	3.87×10^{12}	3.46×10^{12}	3.15×10^{12}

Table 7-4c. Combustion Engineering 14 x 14 Photon Spectrum
45000 MWD/MTU, 3 Cycles
52.75 MWD Average Burn-up
4.04 w/o U-235 Initial Enrichment

Twelve Group Energy Release Rates (MeV/sec) based on 1 cm of Active Fuel Length

E_{mean} (MeV)	Initial	150 Day	1 Year	2 Years	3 Years	4 Years	5 Years	6 Years	7 Years	8 Years	9 years	10 years
0.30	3.29×10^{14}	1.43×10^{12}	7.41×10^{11}	3.65×10^{11}	2.11×10^{11}	1.44×10^{11}	1.15×10^{11}	1.00×10^{11}	9.21×10^{10}	8.69×10^{10}	8.31×10^{10}	7.99×10^{10}
0.63	1.35×10^{15}	5.94×10^{13}	2.65×10^{13}	1.70×10^{13}	1.28×10^{13}	9.90×10^{12}	7.91×10^{12}	6.50×10^{12}	5.49×10^{12}	4.76×10^{12}	4.22×10^{12}	3.81×10^{12}
1.10	8.31×10^{14}	1.74×10^{12}	1.27×10^{12}	9.34×10^{11}	7.32×10^{11}	6.00×10^{11}	5.08×10^{11}	4.40×10^{11}	3.88×10^{11}	3.46×10^{11}	3.11×10^{11}	2.82×10^{11}
1.55	7.62×10^{14}	1.07×10^{12}	7.41×10^{11}	4.61×10^{11}	3.02×10^{11}	2.05×10^{11}	1.43×10^{11}	1.00×10^{11}	7.16×10^{10}	5.14×10^{10}	3.72×10^{10}	2.72×10^{10}
1.99	1.95×10^{14}	5.90×10^{11}	3.44×10^{11}	1.41×10^{11}	5.80×10^{10}	2.39×10^{10}	9.86×10^{09}	4.11×10^{09}	1.74×10^{09}	7.74×10^{08}	3.74×10^{08}	2.08×10^{08}
2.38	1.90×10^{14}	2.18×10^{09}	1.87×10^{04}	4.72×10^{-05}	1.19×10^{-13}	3.01×10^{-22}	7.60×10^{-31}	1.92×10^{-39}	4.85×10^{-48}	1.22×10^{-56}	3.09×10^{-65}	7.80×10^{-74}
2.75	9.50×10^{13}	3.78×10^{07}	3.24×10^{02}	8.19×10^{-07}	2.07×10^{-15}	5.22×10^{-24}	1.32×10^{-32}	3.33×10^{-41}	8.40×10^{-50}	2.12×10^{-58}	5.35×10^{-67}	1.35×10^{-75}
3.25	2.28×10^{14}	1.49×10^{07}	1.28×10^{02}	3.22×10^{-07}	8.14×10^{-16}	2.06×10^{-24}	5.19×10^{-33}	1.31×10^{-41}	3.31×10^{-50}	8.35×10^{-59}	2.11×10^{-67}	5.32×10^{-76}
3.70	1.65×10^{13}	0.	0.	0.	0.	0.	0.	0.	0.	0.	0.	0.
4.22	4.14×10^{13}	0.	0.	0.	0.	0.	0.	0.	0.	0.	0.	0.
4.70	2.17×10^{13}	0.	0.	0.	0.	0.	0.	0.	0.	0.	0.	0.
5.25	5.17×10^{12}	0.	0.	0.	0.	0.	0.	0.	0.	0.	0.	0.
Total	4.06×10^{15}	6.42×10^{13}	2.96×10^{13}	1.89×10^{13}	1.41×10^{13}	1.09×10^{13}	8.69×10^{12}	7.15×10^{12}	6.05×10^{12}	5.24×10^{12}	4.65×10^{12}	4.20×10^{12}

Table 7-4d. Combustion Engineering 14 x 14 Photon Spectrum
55000 MWD/MTU, 4 Cycles
63.39 MWD Average Burn-up
4.54 w/o U-235 Initial Enrichment

Twelve Group Energy Release Rates (MeV/sec) based on 1 cm of Active Fuel Length

E_{mean} (MeV)	Initial	150 Day	1 Year	2 Years	3 Years	4 Years	5 Years	6 Years	7 Years	8 Years	9 years	10 years
0.30	3.16×10^{14}	1.42×10^{12}	7.43×10^{11}	3.77×10^{11}	2.26×10^{11}	1.61×10^{11}	1.31×10^{11}	1.16×10^{11}	1.08×10^{11}	1.02×10^{11}	9.77×10^{10}	9.41×10^{10}
0.63	1.30×10^{15}	6.44×10^{13}	3.18×10^{13}	2.10×10^{13}	1.58×10^{13}	1.22×10^{13}	9.75×10^{12}	7.98×10^{12}	6.71×10^{12}	5.78×10^{12}	5.10×10^{12}	4.59×10^{12}
1.10	7.93×10^{14}	2.03×10^{12}	1.51×10^{12}	1.12×10^{12}	8.85×10^{11}	7.28×10^{11}	6.17×10^{11}	5.35×10^{11}	4.71×10^{11}	4.20×10^{11}	3.77×10^{11}	3.41×10^{11}
1.55	7.21×10^{14}	1.27×10^{12}	8.99×10^{11}	5.68×10^{11}	3.76×10^{11}	2.57×10^{11}	1.80×10^{11}	1.27×10^{11}	9.05×10^{10}	6.50×10^{10}	4.71×10^{10}	3.43×10^{10}
1.99	1.86×10^{14}	5.74×10^{11}	3.33×10^{11}	1.37×10^{11}	5.62×10^{10}	2.32×10^{10}	9.58×10^{09}	4.00×10^{09}	1.17×10^{09}	7.70×10^{08}	3.82×10^{08}	2.21×10^{08}
2.38	1.78×10^{14}	2.07×10^{09}	1.78×10^{04}	4.49×10^{-05}	1.13×10^{-13}	2.86×10^{-22}	7.22×10^{-31}	1.82×10^{-39}	4.60×10^{-48}	1.16×10^{-56}	2.93×10^{-65}	7.41×10^{-74}
2.75	8.91×10^{13}	3.60×10^{07}	3.08×10^{02}	7.78×10^{-07}	1.96×10^{-15}	4.96×10^{-24}	1.25×10^{-32}	3.16×10^{-41}	7.98×10^{-50}	2.01×10^{-58}	5.09×10^{-67}	1.28×10^{-75}
3.25	2.22×10^{14}	1.42×10^{07}	1.21×10^{02}	3.06×10^{-07}	7.74×10^{-16}	1.95×10^{-24}	4.93×10^{-33}	1.24×10^{-41}	3.14×10^{-50}	7.94×10^{-59}	2.00×10^{-67}	5.06×10^{-76}
3.70	1.50×10^{13}	0.	0.	0.	0.	0.	0.	0.	0.	0.	0.	0.
4.22	3.76×10^{13}	0.	0.	0.	0.	0.	0.	0.	0.	0.	0.	0.
4.70	1.97×10^{13}	0.	0.	0.	0.	0.	0.	0.	0.	0.	0.	0.
5.25	5.18×10^{12}	0.	0.	0.	0.	0.	0.	0.	0.	0.	0.	0.
Total	3.88×10^{15}	6.97×10^{13}	3.52×10^{13}	2.32×10^{13}	1.73×10^{13}	1.34×10^{13}	1.07×10^{13}	8.76×10^{12}	7.38×10^{12}	6.37×10^{12}	5.63×10^{12}	5.06×10^{12}

Table 7-4e. Combustion Engineering 14 x 14 Average Neutron Source

Time After Discharge	n/sec per cm of Active Fuel Length		
	35 GWD/MTU	45 GWD/MTU	55 GWD/MTU
150 days	1.00×10^6	1.71×10^6	2.89×10^6
1 year	8.40×10^6	1.48×10^6	2.58×10^6
2 years	7.35×10^5	1.32×10^6	2.35×10^6
3 years	6.93×10^5	1.25×10^6	2.23×10^6
4 years	6.65×10^5	1.20×10^6	2.14×10^6
5 years	6.40×10^5	1.16×10^6	2.06×10^6
6 years	6.17×10^5	1.12×10^6	1.99×10^6
7 years	5.95×10^5	1.08×10^6	1.91×10^6
8 years	5.73×10^5	1.04×10^6	1.84×10^6
9 years	5.53×10^5	9.99×10^5	1.77×10^6
10 years	5.33×10^5	9.63×10^5	1.71×10^6

Table 7-4f. Combustion Engineering 14 x 14 Decay Heat

Time After Discharge	Decay Heat (kw)		
	35 GWD/MTU	45 GWD/MTU	55 GWD/MTU
150 days	7.53	9.6	10.3
1 year	4.02	5.24	5.83
2 years	2.22	2.93	3.41
3 years	1.44	1.95	2.31
4 years	1.05	1.45	1.78
5 years	0.841	1.17	1.46
6 years	0.718	1.00	1.27
7 years	0.640	0.894	1.14
8 years	0.588	0.819	1.05
9 years	0.553	0.769	0.981
10 years	0.525	0.729	0.930

Table 7-4g. Combustion Engineering 14 x 14 Tritium Production

Time After Discharge	Curies/Assembly 35 GWD/MTU	45 GWD/MTU	55 GWD/MTU
150 days	234	297	351
1 year	226	287	338
2 years	214	271	320
3 years	202	257	302
4 years	191	242	286
5 years	181	229	270
6 years	170	217	256
7 years	161	205	241
8 years	152	194	228
9 years	144	183	216
10 years	136	173	204
Fission Product Volume at Discharge (l/assy @ STP)	0.184	0.234	0.276

Table 7-4h. Combustion Engineering 14 x 14 Krypton-85 Production

Time After Discharge	Curies/Assembly		
	35 GWD/MTU	45 GWD/MTU	55 GWD/MTU
150 days	3750	4930	5660
1 year	3610	4720	5450
2 years	3380	4440	5100
3 years	3170	4170	4790
4 years	2970	3890	4510
5 years	2780	3650	4200
6 years	2610	3430	3960
7 years	2454	3210	3720
8 years	2290	3010	3470
9 years	2150	2820	3260
10 years	2020	2650	3050
Fission Product Volume at Discharge (l/assy @ STP)	39.0	51.9	61.7

Table 7-4i. Combustion Engineering 14 x 14 Xenon-131m Production

Time After Discharge	Curies/Assembly 35 GWD/MTU	45 GWD/MTU	55 GWD/MTU
150 days	1.31	1.41	1.32
1 year	4.51×10^{-6}	5.62×10^{-6}	5.24×10^{-6}
2 years	3.04×10^{-15}	3.78×10^{-15}	3.54×10^{-15}
3 years	2.05×10^{-24}	2.56×10^{-24}	2.40×10^{-24}
4 years	1.39×10^{-33}	1.73×10^{-33}	1.62×10^{-33}
5 years	9.37×10^{-43}	1.17×10^{-42}	1.10×10^{-42}
6 years	6.32×10^{-52}	7.88×10^{-52}	7.40×10^{-52}
7 years	4.27×10^{-61}	5.31×10^{-61}	5.00×10^{-61}
8 years	2.89×10^{-70}	3.61×10^{-70}	3.37×10^{-70}
9 years	1.95×10^{-79}	2.43×10^{-79}	2.28×10^{-79}
10 years	1.32×10^{-88}	1.64×10^{-88}	1.54×10^{-88}
Fission Product Volume at Discharge (l/assy @ STP)	385.00	497.00	597.00

Table 7-5a. Combustion Engineering 16 x 16 Fuel Physical Parameters

Parameter	Value
Array configuration	16 x 16
Rod pitch, in.	0.506
Fuel composition	UO_2
Fuel density, %th	.94
Fuel pin outside diameter, in.	.382
No. of pins per assembly	236
Cladding thickness, in.	.025
Cladding material	Zirc-4
Assembly outside dimensions, in. x in.	8.18 x 8.18
Assembly length, in.	176.8
Active fuel length, in.	150
Axial location of fuel, in. from top	22.1
Representative weight/assembly, kg	650
Initial U content/assembly, kg	426.7
Tie plate smear thicknesses in. upper/in. lower	.26/.33
Time between cycles, days*	50
Time average power for each assembly, MW*	15.8
Assembly irradiation growth, in	0.7

*Nominal

Table 7-5b. Combustion Engineering 16 x 16 Photon Spectrum
35000 MWD/MTU, 4 Cycles
41.50 MWD Average Burn-up
3.13 w/o U-235 Initial Enrichment

Twelve Group Energy Release Rates (MeV/sec) based on 1 cm of Active Fuel Length

E_{mean} (MeV)	Initial	150 Day	1 Year	2 Years	3 Years	4 Years	5 Years	6 Years	7 Years	8 Years	9 years	10 years
0.30	3.17×10^{14}	1.39×10^{12}	6.86×10^{11}	3.29×10^{11}	1.83×10^{11}	1.21×10^{11}	9.33×10^{10}	8.01×10^{10}	7.30×10^{10}	6.86×10^{10}	6.54×10^{10}	6.28×10^{10}
0.63	1.29×10^{15}	5.09×10^{13}	2.07×10^{13}	1.28×10^{13}	9.62×10^{12}	7.48×10^{12}	6.00×10^{12}	4.96×10^{12}	4.22×10^{12}	3.67×10^{12}	3.27×10^{12}	2.97×10^{12}
1.10	7.99×10^{14}	1.41×10^{12}	1.01×10^{12}	7.33×10^{11}	5.69×10^{11}	4.64×10^{11}	3.92×10^{11}	3.39×10^{11}	2.99×10^{11}	2.67×10^{11}	2.40×10^{11}	2.18×10^{11}
1.55	7.34×10^{14}	8.47×10^{11}	5.73×10^{11}	3.49×10^{11}	2.26×10^{11}	1.52×10^{11}	1.04×10^{11}	7.33×10^{10}	5.21×10^{10}	3.74×10^{10}	2.71×10^{10}	1.98×10^{10}
1.99	1.87×10^{14}	5.59×10^{11}	3.27×10^{11}	1.34×10^{11}	5.51×10^{10}	2.27×10^{10}	9.36×10^{09}	3.89×10^{09}	1.64×10^{09}	7.19×10^{08}	3.39×10^{08}	1.82×10^{08}
2.38	1.83×10^{14}	2.11×10^{09}	1.81×10^{04}	4.56×10^{-05}	1.15×10^{-13}	2.91×10^{-22}	7.34×10^{-31}	1.85×10^{-39}	4.68×10^{-48}	1.18×10^{-56}	2.98×10^{-65}	7.53×10^{-74}
2.75	9.17×10^{13}	3.65×10^{07}	3.13×10^{02}	7.90×10^{-07}	2.00×10^{-15}	5.04×10^{-24}	1.27×10^{-32}	3.21×10^{-41}	8.11×10^{-50}	2.05×10^{-58}	5.17×10^{-67}	1.30×10^{-75}
3.25	2.20×10^{14}	1.44×10^{07}	1.23×10^{02}	3.11×10^{-07}	7.86×10^{-16}	1.98×10^{-24}	5.01×10^{-33}	1.27×10^{-41}	3.19×10^{-50}	8.06×10^{-59}	2.04×10^{-67}	5.14×10^{-76}
3.70	1.59×10^{13}	0.	0.	0.	0.	0.	0.	0.	0.	0.	0.	0.
4.22	3.99×10^{13}	0.	0.	0.	0.	0.	0.	0.	0.	0.	0.	0.
4.70	2.09×10^{13}	0.	0.	0.	0.	0.	0.	0.	0.	0.	0.	0.
5.25	5.51×10^{12}	0.	0.	0.	0.	0.	0.	0.	0.	0.	0.	0.
Total	3.90×10^{15}	5.51×10^{13}	2.33×10^{13}	1.44×10^{13}	1.07×10^{13}	8.24×10^{12}	6.60×10^{12}	5.46×10^{12}	4.64×10^{12}	4.05×10^{12}	3.61×10^{12}	3.27×10^{12}

Table 7-5c. Combustion Engineering 16 x 16 Photon Spectrum
45000 MWD/MTU, 3 Cycles
52.55 MWD Average Burn-up
4.11 w/o U-235 Initial Enrichment

Twelve Group Energy Release Rates (MeV/sec) based on 1 cm of Active Fuel Length

E_{mean} (MeV)	Initial	150 Day	1 Year	2 Years	3 Years	4 Years	5 Years	6 Years	7 Years	8 Years	9 years	10 years
0.30	3.90×10^{14}	1.64×10^{12}	8.39×10^{11}	4.05×10^{11}	2.28×10^{11}	1.52×10^{11}	1.18×10^{11}	1.02×10^{11}	9.34×10^{10}	8.79×10^{10}	8.39×10^{10}	8.07×10^{10}
0.63	1.60×10^{15}	6.65×10^{13}	2.81×10^{13}	1.77×10^{13}	1.32×10^{13}	1.02×10^{13}	8.13×10^{12}	6.66×10^{12}	5.61×10^{12}	4.84×10^{12}	4.28×10^{12}	3.86×10^{12}
1.10	9.88×10^{14}	1.84×10^{12}	1.33×10^{12}	9.68×10^{11}	7.55×10^{13}	6.16×10^{11}	5.20×10^{11}	4.49×10^{11}	3.95×10^{11}	3.52×10^{11}	3.16×10^{11}	2.86×10^{12}
1.55	9.07×10^{14}	1.15×10^{12}	7.89×10^{11}	4.88×10^{11}	3.18×10^{11}	2.15×10^{11}	1.49×10^{11}	1.05×10^{11}	7.47×10^{10}	5.36×10^{10}	3.88×10^{10}	2.83×10^{10}
1.99	2.32×10^{14}	6.81×10^{11}	3.97×10^{11}	1.63×10^{11}	6.69×10^{10}	2.75×10^{10}	1.14×10^{10}	4.73×10^{09}	2.00×10^{09}	8.79×10^{08}	4.17×10^{08}	2.27×10^{08}
2.38	2.26×10^{14}	2.60×10^{09}	2.23×10^{04}	5.62×10^{-05}	1.42×10^{-13}	3.58×10^{-22}	9.04×10^{-31}	2.28×10^{-39}	5.76×10^{-48}	1.46×10^{-56}	3.67×10^{-65}	9.28×10^{-74}
2.75	1.13×10^{14}	4.50×10^{07}	3.86×10^{02}	9.74×10^{-07}	2.46×10^{-15}	6.21×10^{-24}	1.57×10^{-32}	3.96×10^{-41}	9.99×10^{-50}	2.52×10^{-58}	6.37×10^{-67}	1.61×10^{-75}
3.25	2.69×10^{14}	1.77×10^{07}	1.52×10^{02}	3.84×10^{-07}	9.69×10^{-16}	2.45×10^{-24}	6.17×10^{-33}	1.56×10^{-41}	3.94×10^{-50}	9.94×10^{-59}	2.51×10^{-67}	6.33×10^{-76}
3.70	1.98×10^{13}	0.	0.	0.	0.	0.	0.	0.	0.	0.	0.	0.
4.22	4.97×10^{13}	0.	0.	0.	0.	0.	0.	0.	0.	0.	0.	0.
4.70	2.60×10^{13}	0.	0.	0.	0.	0.	0.	0.	0.	0.	0.	0.
5.25	6.86×10^{12}	0.	0.	0.	0.	0.	0.	0.	0.	0.	0.	0.
Total	4.82×10^{15}	7.18×10^{13}	3.15×10^{13}	1.97×10^{13}	1.46×10^{13}	1.12×10^{13}	8.93×10^{12}	7.32×10^{12}	6.17×10^{12}	5.33×10^{12}	4.72×10^{12}	4.25×10^{12}

Table 7-5d. Combustion Engineering 16 x 16 Photon Spectrum
55000 MWD/MTU, 4 Cycles
64.97 MWD Average Burn-up
4.65 w/o U-235 Initial Enrichment

Twelve Group Energy Release Rates (MeV/sec) based on 1 cm of Active Fuel Length

E_{mean} (MeV)	Initial	150 Day	1 Year	2 Years	3 Years	4 Years	5 Years	6 Years	7 Years	8 Years	9 years	10 years
0.30	3.80×10^{14}	1.65×10^{12}	8.54×10^{11}	4.24×10^{11}	2.48×10^{11}	1.73×10^{11}	1.38×10^{11}	1.21×10^{11}	1.12×10^{11}	1.06×10^{11}	1.01×10^{11}	9.73×10^{10}
0.63	1.56×10^{15}	7.36×10^{13}	3.50×10^{13}	2.29×10^{13}	1.71×10^{13}	1.32×10^{13}	1.04×10^{13}	8.51×10^{12}	7.12×10^{12}	6.11×10^{12}	5.37×10^{12}	4.81×10^{12}
1.10	9.55×10^{14}	2.22×10^{12}	1.64×10^{12}	1.21×10^{12}	9.46×10^{11}	7.73×10^{11}	6.53×10^{11}	5.64×10^{11}	4.96×10^{11}	4.41×10^{11}	3.96×10^{11}	3.58×10^{11}
1.55	8.68×10^{14}	1.43×10^{12}	1.00×10^{12}	6.29×10^{11}	4.16×10^{11}	2.83×10^{11}	1.97×10^{11}	1.39×10^{11}	9.92×10^{10}	7.12×10^{10}	5.15×10^{10}	3.75×10^{10}
1.99	2.24×10^{14}	6.75×10^{11}	3.91×10^{11}	1.61×10^{11}	6.60×10^{10}	2.72×10^{10}	1.12×10^{10}	4.69×10^{09}	1.99×10^{09}	8.89×10^{08}	4.33×10^{08}	2.44×10^{08}
2.38	2.14×10^{14}	2.50×10^{09}	2.14×10^{04}	5.41×10^{-05}	1.37×10^{-13}	3.45×10^{-22}	8.70×10^{-31}	2.20×10^{-39}	5.55×10^{-48}	1.40×10^{-56}	3.54×10^{-65}	8.93×10^{-74}
2.75	1.07×10^{14}	4.33×10^{07}	3.71×10^{02}	9.37×10^{-07}	2.37×10^{-15}	5.98×10^{-24}	1.51×10^{-32}	3.81×10^{-41}	9.62×10^{-50}	2.43×10^{-58}	6.13×10^{-67}	1.55×10^{-75}
3.25	2.67×10^{14}	1.71×10^{07}	1.46×10^{02}	3.69×10^{-07}	9.32×10^{-16}	2.35×10^{-24}	5.94×10^{-33}	1.50×10^{-41}	3.79×10^{-50}	9.57×10^{-59}	2.42×10^{-67}	6.10×10^{-76}
3.70	1.80×10^{13}	0.	0.	0.	0.	0.	0.	0.	0.	0.	0.	0.
4.22	4.51×10^{13}	0.	0.	0.	0.	0.	0.	0.	0.	0.	0.	0.
4.70	2.37×10^{13}	0.	0.	0.	0.	0.	0.	0.	0.	0.	0.	0.
5.25	6.22×10^{12}	0.	0.	0.	0.	0.	0.	0.	0.	0.	0.	0.
Total	4.67×10^{15}	7.96×10^{13}	3.89×10^{13}	2.53×10^{13}	1.88×10^{13}	1.44×10^{13}	1.14×10^{13}	9.34×10^{12}	7.83×10^{12}	6.73×10^{12}	5.91×10^{12}	5.31×10^{12}

Table 7-5e. Combustion Engineering 16 x 16 Average Neutron Source

Time After Discharge	n/sec per cm of Active Fuel Length		
	35 GWD/MTU	45 GWD/MTU	55 GWD/MTU
150 days	1.04×10^6	1.65×10^6	3.11×10^6
1 year	8.75×10^5	1.43×10^6	2.79×10^6
2 years	7.70×10^5	1.28×10^6	2.55×10^6
3 years	7.26×10^5	1.21×10^6	2.42×10^6
4 years	6.97×10^5	1.16×10^6	2.32×10^6
5 years	6.71×10^5	1.12×10^6	2.23×10^6
6 years	6.47×10^5	1.08×10^6	2.15×10^6
7 years	6.23×10^5	1.04×10^6	2.07×10^6
8 years	6.01×10^5	1.00×10^6	1.99×10^6
9 years	5.80×10^5	9.66×10^5	1.92×10^6
10 years	5.59×10^5	9.31×10^5	1.85×10^6

Table 7-5f. Combustion Engineering 16 x 16 Decay Heat

Time After Discharge	Decay Heat (kw)		
	35 GWD/MTU	45 GWD/MTU	55 GWD/MTU
150 days	9.33	11.7	12.1
1 year	4.91	6.22	7.13
2 years	2.65	3.43	4.13
3 years	1.70	2.24	2.80
4 years	1.23	1.64	2.11
5 years	0.971	1.31	1.72
6 years	0.825	1.17	1.47
7 years	0.733	0.989	1.32
8 years	0.671	0.907	1.21
9 years	0.628	0.848	1.13
10 years	0.594	0.801	1.07

Table 7-5g. Combustion Engineering 16 x 16 Tritium Production

Time After Discharge	Curies/Assembly		
	35 GWD/MTU	45 GWD/MTU	55 GWD/MTU
150 days	265	329	400
1 year	257	318	385
2 years	243	301	365
3 years	229	284	346
4 years	217	269	327
5 years	205	254	309
6 years	194	240	292
7 years	183	227	276
8 years	173	215	261
9 years	164	203	247
10 years	155	192	233
Fission Product Volume at Discharge (l/assy @ STP)	0.210	0.259	0.316

Table 7-5h. Combustion Engineering 16 x 16 Krypton-85 Production

Time After Discharge	Curies/Assembly		
	35 GWD/MTU	45 GWD/MTU	55 GWD/MTU
150 days	4310	5490	6520
1 year	4150	5300	6290
2 years	3890	4950	5870
3 years	3630	4650	5520
4 years	3410	4380	5180
5 years	3190	4080	4840
6 years	2990	3850	4530
7 years	2810	3600	4270
8 years	2630	3370	4000
9 years	2470	3160	3740
10 years	2310	2960	3510
Fission Product Volume at Discharge (l/assy @ STP)	440	569	694

Table 7-5i. Combustion Engineering 16 x 16 Xenon-131m Production

Time After Discharge	Curies/Assembly @ Burnup (MWD/MTU) 35000	45000	55000
150 days	1.49	1.83	1.74
1 year	5.94×10^{-6}	7.28×10^{-6}	6.93×10^{-6}
2 years	4.00×10^{-15}	4.91×10^{-15}	4.69×10^{-15}
3 years	2.71×10^{-24}	3.33×10^{-24}	3.16×10^{-24}
4 years	1.83×10^{-33}	2.24×10^{-33}	2.14×10^{-33}
5 years	1.23×10^{-43}	1.48×10^{-42}	1.44×10^{-42}
6 years	8.34×10^{-52}	1.02×10^{-51}	9.75×10^{-52}
7 years	5.64×10^{-61}	6.93×10^{-61}	6.59×10^{-61}
8 years	3.81×10^{-70}	4.69×10^{-70}	4.46×10^{-70}
9 years	2.57×10^{-79}	3.16×10^{-79}	3.00×10^{-79}
10 years	1.74×10^{-88}	2.13×10^{-88}	2.03×10^{-88}
Fission Product Volume at Discharge (l/assy @ STP)	436.00	547.00	676.00

Table 7-6a. Babcock & Wilcox 15 x 15 Fuel Physical Parameters

Parameter	Value
Array configuration	15 x 15
Rod pitch, in.	0.568
Fuel composition	UO_2
Fuel density, %th	.94
Fuel pin outside diameter, in.	.43
No. of pins per assembly	208
Cladding thickness, in.	.0265
Cladding material	Zirc-4
Assembly outside dimensions, in. x in.	8.54 x 8.54
Assembly length, in.	165.6
Active fuel length, in.	144
Axial location of fuel, in. from top	13.0
Representative weight/assembly, kg	689
Initial U content/assembly, kg	464.2
Tie plate smear thicknesses in. upper/in. lower	.41/.55
Time between cycles, days*	50
Time average power for each assembly, MW*	15.7
Assembly irradiation growth, in	0.7

*Nominal

Table 7-6b. Babcock & Wilcox 15 x 15 Photon Spectrum
35000 MWD/MTU, 4 Cycles
47.96 MWD Average Burn-up
3.20 w/o U-235 Initial Enrichment

Twelve Group Energy Release Rates (MeV/sec) based on 1 cm of Active Fuel Length

E_{mean} (MeV)	Initial	150 Day	1 Year	2 Years	3 Years	4 Years	5 Years	6 Years	7 Years	8 Years	9 years	10 years
0.30	3.33×10^{14}	1.48×10^{12}	7.37×10^{11}	3.57×10^{11}	2.02×10^{11}	1.35×10^{11}	1.06×10^{11}	9.14×10^{10}	8.35×10^{10}	7.86×10^{10}	7.50×10^{10}	7.21×10^{10}
0.63	1.35×10^{15}	5.56×10^{13}	2.35×10^{13}	1.48×10^{13}	1.11×10^{13}	8.63×10^{12}	6.92×10^{12}	5.72×10^{12}	4.86×10^{12}	4.24×10^{12}	3.77×10^{12}	3.43×10^{12}
1.10	8.37×10^{14}	1.61×10^{12}	1.16×10^{12}	8.45×10^{11}	6.59×10^{11}	5.39×10^{11}	4.56×10^{11}	3.96×10^{11}	3.49×10^{11}	3.12×10^{11}	2.81×10^{11}	2.55×10^{11}
1.55	7.69×10^{14}	9.54×10^{11}	6.50×10^{11}	3.99×10^{11}	2.59×10^{11}	1.74×10^{11}	1.21×10^{11}	8.47×10^{10}	6.03×10^{10}	4.33×10^{10}	3.13×10^{10}	2.29×10^{10}
1.99	1.95×10^{14}	5.94×10^{11}	3.47×10^{11}	1.43×10^{11}	5.86×10^{10}	2.41×10^{10}	9.95×10^{09}	4.14×10^{09}	1.75×10^{09}	7.71×10^{08}	3.66×10^{08}	1.99×10^{08}
2.38	1.91×10^{14}	2.20×10^{09}	1.89×10^{04}	4.77×10^{-05}	1.20×10^{-13}	3.04×10^{-22}	7.67×10^{-31}	1.94×10^{-39}	4.89×10^{-48}	1.23×10^{-56}	3.12×10^{-65}	7.87×10^{-74}
2.75	9.60×10^{13}	3.82×10^{07}	3.27×10^{02}	8.26×10^{-07}	2.09×10^{-15}	5.27×10^{-24}	1.33×10^{-32}	3.36×10^{-41}	8.48×10^{-50}	2.14×10^{-58}	5.40×10^{-67}	1.36×10^{-75}
3.25	2.30×10^{14}	1.50×10^{07}	1.29×10^{02}	3.26×10^{-07}	8.22×10^{-16}	2.08×10^{-24}	5.24×10^{-33}	1.32×10^{-41}	3.34×10^{-50}	8.43×10^{-59}	2.13×10^{-67}	5.37×10^{-76}
3.70	1.66×10^{13}	0.	0.	0.	0.	0.	0.	0.	0.	0.	0.	0.
4.22	4.18×10^{13}	0.	0.	0.	0.	0.	0.	0.	0.	0.	0.	0.
4.70	2.19×10^{13}	0.	0.	0.	0.	0.	0.	0.	0.	0.	0.	0.
5.25	5.77×10^{12}	0.	0.	0.	0.	0.	0.	0.	0.	0.	0.	0.
Total	4.09×10^{15}	6.02×10^{13}	2.63×10^{13}	1.65×10^{13}	1.23×10^{13}	9.50×10^{12}	7.62×10^{12}	5.36×10^{12}	6.30×10^{12}	4.67×10^{12}	4.16×10^{12}	3.78×10^{12}

Table 7-6c. Babcock & Wilcox 15 x 15 Photon Spectrum
45000 MWD/MTU, 3 Cycles
57.95 MWD Average Burn-up
4.14 w/o U-235 Initial Enrichment

Twelve Group Energy Release Rates (MeV/sec) based on 1 cm of Active Fuel Length

E_{mean} (MeV)	Initial	150 Day	1 Year	2 Years	3 Years	4 Years	5 Years	6 Years	7 Years	8 Years	9 years	10 years
0.30	4.06×10^{14}	1.73×10^{12}	8.89×10^{11}	4.32×10^{11}	2.45×10^{11}	1.65×10^{11}	1.29×10^{11}	1.12×10^{11}	1.03×10^{11}	9.68×10^{10}	9.25×10^{10}	8.89×10^{10}
0.63	1.66×10^{15}	7.03×10^{13}	3.02×10^{13}	1.91×10^{13}	1.43×10^{13}	1.11×10^{13}	8.83×10^{12}	7.25×10^{12}	6.11×10^{12}	5.29×10^{12}	4.68×10^{12}	4.22×10^{12}
1.10	1.03×10^{15}	1.99×10^{12}	1.44×10^{12}	1.05×10^{12}	8.26×10^{11}	6.76×10^{11}	5.72×10^{11}	4.96×10^{11}	4.37×10^{11}	3.89×10^{11}	3.50×10^{11}	3.17×10^{11}
1.55	9.46×10^{14}	1.23×10^{12}	8.43×10^{11}	5.23×10^{11}	3.42×10^{11}	2.32×10^{11}	1.61×10^{11}	1.13×10^{11}	8.05×10^{10}	5.78×10^{10}	4.19×10^{10}	3.05×10^{10}
1.99	2.41×10^{14}	7.16×10^{11}	4.18×10^{11}	1.72×10^{11}	7.05×10^{10}	2.90×10^{10}	1.20×10^{10}	4.99×10^{09}	2.11×10^{09}	9.31×10^{08}	4.45×10^{08}	2.43×10^{08}
2.38	2.36×10^{14}	2.70×10^{09}	2.31×10^{04}	5.84×10^{-05}	1.47×10^{-13}	3.72×10^{-22}	9.40×10^{-31}	2.37×10^{-39}	5.99×10^{-48}	1.51×10^{-56}	3.82×10^{-65}	9.64×10^{-74}
2.75	1.19×10^{14}	4.68×10^{07}	4.01×10^{02}	1.01×10^{-06}	2.56×10^{-15}	6.45×10^{-24}	1.63×10^{-32}	4.11×10^{-41}	1.04×10^{-49}	2.62×10^{-58}	6.62×10^{-67}	1.67×10^{-75}
3.25	2.78×10^{14}	1.84×10^{07}	1.58×10^{02}	3.99×10^{-07}	1.01×10^{-15}	2.54×10^{-24}	6.42×10^{-33}	1.62×10^{-50}	4.09×10^{-50}	1.03×10^{-58}	2.61×10^{-67}	6.59×10^{-76}
3.70	2.09×10^{13}	0.	0.	0.	0.	0.	0.	0.	0.	0.	0.	0.
4.22	5.26×10^{13}	0.	0.	0.	0.	0.	0.	0.	0.	0.	0.	0.
4.70	2.75×10^{13}	0.	0.	0.	0.	0.	0.	0.	0.	0.	0.	0.
5.25	7.27×10^{12}	0.	0.	0.	0.	0.	0.	0.	0.	0.	0.	0.
Total	5.02×10^{15}	7.59×10^{13}	3.38×10^{13}	2.13×10^{13}	1.58×10^{13}	1.22×10^{13}	9.71×10^{12}	7.97×10^{12}	6.73×10^{12}	5.83×10^{12}	5.16×10^{12}	4.66×10^{12}

Table 7-6d. Babcock & Wilcox 15 x 15 Photon Spectrum
55000 MWD/MTU, 4 Cycles
74.96 MWD Average Burn-up
4.77 w/o U-235 Initial Enrichment

Twelve Group Energy Release Rates (MeV/sec) based on 1 cm of Active Fuel Length

E_{mean} (MeV)	Initial	150 Day	1 Year	2 Years	3 Years	4 Years	5 Years	6 Years	7 Years	8 Years	9 years	10 years
0.30	4.04×10^{14}	1.77×10^{12}	9.21×10^{11}	4.63×10^{11}	2.75×10^{11}	1.94×10^{11}	1.57×10^{11}	1.38×10^{11}	1.28×10^{11}	1.21×10^{11}	1.16×10^{11}	1.11×10^{11}
0.63	1.66×10^{15}	8.16×10^{13}	4.00×10^{13}	2.64×10^{13}	1.97×10^{13}	1.52×10^{13}	1.21×10^{13}	9.82×10^{12}	8.21×10^{12}	7.04×10^{12}	6.19×10^{12}	5.55×10^{12}
1.10	1.01×10^{15}	2.55×10^{12}	1.90×10^{12}	1.40×10^{12}	1.10×10^{12}	9.07×10^{11}	7.67×10^{11}	6.64×10^{11}	5.84×10^{11}	5.20×10^{11}	4.67×10^{11}	4.22×10^{11}
1.55	9.21×10^{14}	1.62×10^{12}	1.15×10^{12}	7.23×10^{11}	4.79×10^{11}	3.28×10^{11}	2.28×10^{11}	1.61×10^{11}	1.15×10^{11}	8.26×10^{10}	5.97×10^{10}	4.34×10^{10}
1.99	2.37×10^{14}	7.18×10^{11}	4.16×10^{11}	1.71×10^{11}	7.03×10^{10}	2.89×10^{10}	1.20×10^{10}	5.00×10^{09}	2.13×10^{09}	9.54×10^{08}	4.69×10^{08}	2.68×10^{08}
2.38	2.28×10^{14}	2.65×10^{09}	2.27×10^{04}	5.73×10^{-05}	1.45×10^{-13}	3.65×10^{-22}	9.22×10^{-31}	2.33×10^{-39}	5.88×10^{-48}	1.48×10^{-56}	3.75×10^{-65}	9.46×10^{-74}
2.75	1.14×10^{14}	4.89×10^{07}	3.93×10^{02}	9.93×10^{-07}	2.51×10^{-15}	6.33×10^{-24}	1.60×10^{-32}	4.03×10^{-41}	1.02×10^{-49}	2.57×10^{-58}	6.49×10^{-67}	1.64×10^{-75}
3.25	2.83×10^{14}	1.81×10^{07}	1.55×10^{02}	3.91×10^{-07}	9.88×10^{-16}	2.49×10^{-24}	6.30×10^{-33}	1.59×10^{-41}	4.01×10^{-50}	1.01×10^{-58}	2.56×10^{-67}	6.46×10^{-76}
3.70	1.92×10^{13}	0.	0.	0.	0.	0.	0.	0.	0.	0.	0.	0.
4.22	4.82×10^{13}	0.	0.	0.	0.	0.	0.	0.	0.	0.	0.	0.
4.70	2.53×10^{13}	0.	0.	0.	0.	0.	0.	0.	0.	0.	0.	0.
5.25	6.65×10^{12}	0.	0.	0.	0.	0.	0.	0.	0.	0.	0.	0.
Total	4.96×10^{15}	8.82×10^{13}	4.44×10^{13}	2.92×10^{13}	2.17×10^{13}	1.67×10^{13}	1.32×10^{13}	1.08×10^{13}	9.04×10^{12}	7.77×10^{12}	6.83×10^{12}	6.12×10^{12}

Table 7-6e. Babcock & Wilcox 15 x 15 Average Neutron Source

Time After Discharge	n/sec per cm of Active Fuel Length		
	35 GWD/MTU	45 GWD/MTU	55 GWD/MTU
150 days	1.28×10^6	1.73×10^6	3.84×10^6
1 year	1.08×10^6	1.48×10^6	3.42×10^6
2 years	9.46×10^5	1.31×10^6	3.12×10^6
3 years	8.93×10^5	1.24×10^6	2.97×10^6
4 years	8.56×10^5	1.19×10^6	2.84×10^6
5 years	8.24×10^5	1.15×10^6	2.73×10^6
6 years	7.95×10^5	1.11×10^6	2.63×10^6
7 years	7.66×10^5	1.07×10^6	2.53×10^6
8 years	7.38×10^5	1.03×10^6	2.44×10^6
9 years	7.12×10^5	9.91×10^5	2.35×10^6
10 years	6.86×10^5	9.55×10^5	2.26×10^6

Table 7-6f. Babcock & Wilcox 15 x 15 Decay Heat

Time After Discharge	Decay Heat (kw)		
	35 GWD/MTU	45 GWD/MTU	55 GWD/MTU
150 days	9.77	12.0	13.6
1 year	5.11	6.40	7.70
2 years	2.86	3.54	4.50
3 years	1.86	2.33	3.08
4 years	1.36	1.71	2.35
5 years	1.08	1.37	1.92
6 years	0.920	1.17	1.66
7 years	0.820	1.04	1.49
8 years	0.753	0.958	1.37
9 years	0.704	0.894	1.29
10 years	0.667	0.849	1.22

Table 7-6g. Babcock & Wilcox 15 x 15 Tritium Production

Time After Discharge	Curies/Assembly 35 GWD/MTU	45 GWD/MTU	55 GWD/MTU
150 days	293	346	439
1 year	283	335	428
2 years	267	317	402
3 years	253	299	380
4 years	239	283	360
5 years	226	267	341
6 years	214	253	322
7 years	202	239	304
8 years	191	226	288
9 years	180	214	272
10 years	170	202	257
Fission Product Volume at Discharge (~~M~~ liters/assy @ STP)	0.210	0.259	0.316

@ 50 GWD/MTU

$$\frac{.316-.259}{55-45} = \frac{x-.259}{50-45}$$

$$x = \frac{(.316-.259)(5)}{10} + .259$$

$$= .298$$

Table 7-6h. Babcock & Wilcox 15 x 15 Krypton-85 Production

Time After Discharge	Curies/Assembly 35 GWD/MTU	45 GWD/MTU	55 GWD/MTU
150 days	4720	5820	7060
1 year	4540	5600	6800
2 years	4240	5230	6400
3 years	3990	4900	6000
4 years	3730	4610	5600
5 years	3490	4370	5210
6 years	3280	4060	4940
7 years	3070	3800	4610
8 years	2880	3560	4320
9 years	2700	3330	4060
10 years	2530	3120	3800
Fission Product Volume at Discharge (l/assy @ STP)	48.8	60.4	76.3

liters

@ 50 GWD/MTU

$$\frac{76.3-60.4}{55-45} = \frac{x-60.4}{50-45}$$

$$x = \frac{(76.3-60.4)}{10} \times 5 + 60.4$$

$$x = 68.4$$

Table 7-6i. Babcock & Wilcox 15 x 15 Xenon-131m Production

Time After Discharge	Curies/Assembly 35 GWD/MTU	45 GWD/MTU	55 GWD/MTU
150 days	1.50	1.82	1.77
1 year	5.96×10^{-6}	7.24×10^{-6}	7.06×10^{-6}
2 years	4.02×10^{-15}	4.90×10^{-15}	4.76×10^{-15}
3 years	2.72×10^{-24}	3.30×10^{-24}	3.22×10^{-24}
4 years	1.84×10^{-33}	2.23×10^{-33}	2.17×10^{-33}
5 years	1.24×10^{-42}	1.51×10^{-42}	1.47×10^{-42}
6 years	8.38×10^{-52}	1.02×10^{-51}	9.91×10^{-52}
7 years	5.67×10^{-61}	6.88×10^{-61}	6.69×10^{-61}
8 years	3.84×10^{-70}	4.65×10^{-70}	4.54×10^{-70}
9 years	2.58×10^{-79}	3.13×10^{-79}	3.05×10^{-79}
10 years	1.74×10^{-88}	2.12×10^{-88}	2.06×10^{-88}
Fission Product Volume at Discharge (l/assy @ STP)	436.00	547.00	741.00

liters

@ 50 GWD/MTU

$$\frac{(741-547)}{10} = \frac{x-547}{5}$$

$$x = \frac{(741-547)5}{10} + 547 = 644$$

Table 7-7a. Babcock & Wilcox 17 x 17 Fuel Physical Parameters

Parameter	Value
Array configuration	17 x 17
Rod pitch, in.	0.502
Fuel composition	UO_2
Fuel density, %th	.94
Fuel pin outside diameter, in.	.379
No. of pins per assembly	264
Cladding thickness, in.	.024
Cladding material	Zirc-4
Assembly outside dimensions, in. x in.	8.54 x 8.54
Assembly length, in.	165.7
Active fuel length, in.	143
Axial location of fuel, in. from top	15.9
Representative weight/assembly, kg	683
Initial U content/assembly, kg	456.3
Tie plate smear thicknesses	
in. upper/in. lower	.41/.55
Time between cycles, days*	50
Time average power for each assembly, MW*	18.5
Assembly irradiation growth, in	0.7

*Nominal

Table 7-7b. Babcock & Wilcox 17 x 17 Photon Spectrum
35000 MWD/MTU, 4 Cycles
46.24 MWD Average Burn-up
3.43 w/o U-235 Initial Enrichment

Twelve Group Energy Release Rates (MeV/sec) based on 1 cm of Active Fuel Length

E_{mean} (MeV)	Initial	150 Day	1 Year	2 Years	3 Years	4 Years	5 Years	6 Years	7 Years	8 Years	9 years	10 years
0.30	4.31×10^{14}	1.73×10^{12}	8.72×10^{11}	4.11×10^{11}	2.24×10^{11}	1.44×10^{11}	1.09×10^{11}	9.23×10^{10}	8.36×10^{10}	7.83×10^{10}	7.46×10^{10}	7.16×10^{10}
0.63	1.76×10^{15}	6.54×10^{13}	2.46×10^{13}	1.48×10^{13}	1.10×10^{13}	8.54×10^{12}	6.84×10^{12}	5.64×10^{12}	4.78×10^{12}	4.15×10^{12}	3.69×10^{12}	3.35×10^{12}
1.10	1.09×10^{15}	1.65×10^{12}	1.16×10^{12}	8.38×10^{11}	6.48×10^{11}	5.27×10^{11}	4.44×10^{11}	3.83×10^{11}	3.38×10^{11}	3.01×10^{11}	2.71×10^{11}	2.45×10^{11}
1.55	1.01×10^{15}	1.01×10^{12}	6.74×10^{11}	4.09×10^{11}	2.63×10^{11}	1.76×10^{11}	1.21×10^{11}	8.49×10^{10}	6.03×10^{10}	4.32×10^{10}	3.13×10^{10}	2.28×10^{10}
1.99	2.57×10^{14}	7.22×10^{11}	4.22×10^{11}	1.73×10^{11}	7.12×10^{10}	2.93×10^{10}	1.21×10^{10}	5.01×10^{09}	2.11×10^{09}	9.18×10^{08}	4.27×10^{08}	2.24×10^{08}
2.38	2.53×10^{14}	2.89×10^{09}	2.47×10^{04}	6.24×10^{-05}	1.58×10^{-13}	3.98×10^{-22}	1.01×10^{-30}	2.54×10^{-39}	6.41×10^{-40}	1.62×10^{-56}	4.08×10^{-65}	1.03×10^{-73}
2.75	1.27×10^{14}	5.00×10^{07}	4.29×10^{02}	1.08×10^{-06}	2.73×10^{-15}	6.90×10^{-24}	1.74×10^{-32}	4.40×10^{-41}	1.11×10^{-49}	2.80×10^{-58}	7.08×10^{-67}	1.79×10^{-75}
3.25	2.94×10^{14}	1.97×10^{07}	1.69×10^{02}	4.26×10^{-07}	1.08×10^{-15}	2.72×10^{-24}	6.86×10^{-33}	1.73×10^{-41}	4.37×10^{-50}	1.10×10^{-58}	2.79×10^{-67}	7.04×10^{-76}
3.70	2.27×10^{13}	0.	0.	0.	0.	0.	0.	0.	0.	0.	0.	0.
4.22	5.70×10^{13}	0.	0.	0.	0.	0.	0.	0.	0.	0.	0.	0.
4.70	2.98×10^{13}	0.	0.	0.	0.	0.	0.	0.	0.	0.	0.	0.
5.25	7.88×10^{12}	0.	0.	0.	0.	0.	0.	0.	0.	0.	0.	0.
Total	5.34×10^{15}	7.05×10^{13}	2.77×10^{13}	1.66×10^{13}	1.22×10^{13}	9.42×10^{12}	7.52×10^{12}	6.20×10^{12}	5.26×10^{12}	4.58×10^{12}	4.07×10^{12}	3.69×10^{12}

Table 7-7c. Babcock & Wilcox 17 x 17 Photon Spectrum
45000 MWD/MTU, 3 Cycles
59.25 MWD Average Burn-up
4.25 w/o U-235 Initial Enrichment

Twelve Group Energy Release Rates (MeV/sec) based on 1 cm of Active Fuel Length

E_{mean} (MeV)	Initial	150 Day	1 Year	2 Years	3 Years	4 Years	5 Years	6 Years	7 Years	8 Years	9 years	10 years
0.30	4.87×10^{14}	1.99×10^{12}	1.01×10^{12}	4.83×10^{11}	2.68×10^{11}	1.77×10^{11}	1.36×10^{11}	1.17×10^{11}	1.06×10^{11}	9.99×10^{10}	9.52×10^{10}	9.15×10^{10}
0.63	1.99×10^{15}	8.08×10^{13}	3.33×10^{13}	2.08×10^{13}	1.55×10^{13}	1.19×10^{13}	9.45×10^{12}	7.71×10^{12}	6.47×10^{12}	5.57×10^{12}	4.90×10^{12}	4.41×10^{12}
1.10	1.23×10^{15}	2.18×10^{12}	1.56×10^{12}	1.14×10^{12}	8.84×10^{11}	7.21×10^{11}	6.08×10^{11}	5.25×10^{11}	4.61×10^{11}	4.11×10^{11}	3.69×10^{11}	3.34×10^{11}
1.55	1.13×10^{15}	1.37×10^{12}	9.39×10^{11}	5.79×10^{11}	3.77×10^{11}	2.55×10^{11}	1.77×10^{11}	1.24×10^{11}	8.83×10^{10}	6.34×10^{10}	4.58×10^{10}	3.33×10^{10}
1.99	2.89×10^{14}	8.27×10^{11}	4.82×10^{11}	1.98×10^{11}	8.13×10^{10}	3.35×10^{10}	1.38×10^{10}	5.74×10^{09}	2.42×10^{09}	1.06×10^{09}	4.99×10^{08}	2.67×10^{08}
2.38	2.83×10^{14}	3.24×10^{09}	2.78×10^{04}	7.01×10^{-05}	1.77×10^{-13}	4.47×10^{-22}	1.13×10^{-30}	2.85×10^{-39}	7.20×10^{-48}	1.82×10^{-56}	4.59×10^{-65}	1.16×10^{-73}
2.75	1.42×10^{14}	5.62×10^{09}	4.81×10^{02}	1.22×10^{-06}	3.07×10^{-15}	7.75×10^{-24}	1.96×10^{-32}	4.94×10^{-41}	1.25×10^{-49}	3.15×10^{-58}	7.95×10^{-67}	2.01×10^{-75}
3.25	3.34×10^{14}	2.21×10^{07}	1.90×10^{02}	4.79×10^{-07}	1.21×10^{-15}	3.05×10^{-24}	7.71×10^{-33}	1.95×10^{-41}	4.91×10^{-50}	1.24×10^{-58}	3.13×10^{-67}	7.91×10^{-76}
3.70	2.50×10^{13}	0.	0.	0.	0.	0.	0.	0.	0.	0.	0.	0.
4.22	6.28×10^{13}	0.	0.	0.	0.	0.	0.	0.	0.	0.	0.	0.
4.70	3.28×10^{13}	0.	0.	0.	0.	0.	0.	0.	0.	0.	0.	0.
5.25	8.67×10^{12}	0.	0.	0.	0.	0.	0.	0.	0.	0.	0.	0.
Total	6.02×10^{15}	8.17×10^{13}	3.73×10^{13}	2.32×10^{13}	1.71×10^{13}	1.31×10^{13}	1.04×10^{13}	8.48×10^{12}	7.13×10^{12}	6.14×10^{12}	5.41×10^{12}	4.87×10^{12}

Table 7-7d. Babcock & Wilcox 17 x 17 Photon Spectrum
55000 MWD/MTU, 3 Cycles
72.28 MWD Average Burn-up
5.09 w/o U-235 Initial Enrichment

Twelve Group Energy Release Rates (MeV/sec) based on 1 cm of Active Fuel Length

E_{mean} (MeV)	Initial	150 Day	1 Year	2 Years	3 Years	4 Years	5 Years	6 Years	7 Years	8 Years	9 years	10 years
0.30	5.22×10^{14}	2.18×10^{12}	1.11×10^{12}	5.39×10^{11}	3.06×10^{11}	2.06×10^{11}	1.61×10^{11}	1.40×10^{11}	1.28×10^{11}	1.21×10^{11}	1.15×10^{11}	1.11×10^{11}
0.63	2.14×10^{15}	9.47×10^{13}	4.24×10^{13}	2.71×10^{13}	2.02×10^{13}	1.55×10^{13}	1.22×10^{13}	9.89×10^{12}	8.23×10^{12}	7.02×10^{12}	6.14×10^{12}	5.49×10^{12}
1.10	1.32×10^{15}	2.70×10^{12}	1.96×10^{12}	1.44×10^{12}	1.12×10^{12}	9.16×10^{11}	7.72×10^{11}	6.66×10^{11}	5.84×10^{11}	5.19×10^{11}	4.66×10^{11}	4.21×10^{11}
1.55	1.21×10^{15}	1.75×10^{12}	1.22×10^{12}	7.61×10^{11}	5.01×10^{11}	3.41×10^{11}	2.37×10^{11}	1.67×10^{11}	1.19×10^{11}	8.53×10^{10}	6.16×10^{10}	4.48×10^{10}
1.99	3.10×10^{14}	8.99×10^{11}	5.22×10^{11}	2.14×10^{11}	8.81×10^{10}	3.63×10^{10}	1.50×10^{10}	6.23×10^{09}	2.64×10^{09}	1.16×10^{09}	5.54×10^{08}	3.03×10^{08}
2.38	3.00×10^{14}	3.46×10^{09}	2.96×10^{04}	7.47×10^{-05}	1.89×10^{-13}	4.76×10^{-22}	1.20×10^{-30}	3.04×10^{-39}	7.67×10^{-48}	1.94×10^{-56}	4.89×10^{-65}	1.23×10^{-73}
2.75	1.51×10^{14}	5.99×10^{07}	5.13×10^{02}	1.30×10^{-06}	3.27×10^{-15}	8.26×10^{-24}	2.08×10^{-32}	5.26×10^{-41}	1.33×10^{-49}	3.36×10^{-58}	8.47×10^{-67}	2.14×10^{-75}
3.25	3.59×10^{14}	2.36×10^{07}	2.02×10^{02}	5.10×10^{-07}	1.29×10^{-15}	3.25×10^{-24}	8.21×10^{-33}	2.07×10^{-41}	5.24×10^{-50}	1.32×10^{-58}	3.34×10^{-67}	8.43×10^{-76}
3.70	2.62×10^{13}	0.	0.	0.	0.	0.	0.	0.	0.	0.	0.	0.
4.22	6.59×10^{13}	0.	0.	0.	0.	0.	0.	0.	0.	0.	0.	0.
4.70	3.45×10^{13}	0.	0.	0.	0.	0.	0.	0.	0.	0.	0.	0.
5.25	9.09×10^{12}	0.	0.	0.	0.	0.	0.	0.	0.	0.	0.	0.
Total	6.44×10^{15}	1.02×10^{14}	4.72×10^{13}	3.01×10^{13}	2.22×10^{13}	1.70×10^{13}	1.34×10^{13}	1.09×10^{13}	9.06×10^{12}	7.75×10^{12}	6.79×10^{12}	6.06×10^{12}

Table 7-7e. Babcock & Wilcox 17 x 17 Average Neutron Source

Time After Discharge	n/sec per cm of Active Fuel Length		
	35 GWD/MTU	45 GWD/MTU	55 GWD/MTU
150 days	1.00×10^6	1.90×10^6	3.14×10^6
1 year	8.34×10^5	1.65×10^6	2.77×10^6
2 years	7.27×10^5	1.47×10^6	2.51×10^6
3 years	6.85×10^5	1.39×10^6	2.38×10^6
4 years	6.57×10^5	1.34×10^6	2.29×10^6
5 years	6.33×10^5	1.29×10^6	2.20×10^6
6 years	6.10×10^5	1.24×10^6	2.12×10^6
7 years	5.88×10^5	1.20×10^6	2.04×10^6
8 years	5.67×10^5	1.15×10^6	1.97×10^6
9 years	5.47×10^5	1.11×10^6	1.89×10^6
10 years	5.27×10^5	1.07×10^6	1.83×10^6

Table 7-7f. Babcock & Wilcox 17 x 17 Decay Heat

Time After Discharge	Decay Heat (kw)		
	35 GWD/MTU	45 GWD/MTU	55 GWD/MTU
150 days	11.1	13.5	15.6
1 year	5.64	7.06	8.43
2 years	2.99	3.87	4.74
3 years	1.89	2.52	3.17
4 years	1.34	1.83	2.35
5 years	1.06	1.45	1.90
6 years	0.889	1.23	1.62
7 years	0.787	1.09	1.45
8 years	0.718	0.999	1.33
9 years	0.670	0.932	1.24
10 years	0.638	0.882	1.17

Table 7-7g. Babcock & Wilcox 17 x 17 Tritium Production

Time After Discharge	Curies/Assembly		
	35 GWD/MTU	45 GWD/MTU	55 GWD/MTU
150 days	282	357	429
1 year	273	345	414
2 years	258	326	392
3 years	244	308	370
4 years	231	291	351
5 years	218	275	332
6 years	206	260	313
7 years	195	246	296
8 years	184	233	280
9 years	174	220	265
10 years	165	208	251
Fission Product Volume at Discharge (l/assy @ STP)	0.223	0.281	0.339

Table 7-7h. Babcock & Wilcox 17 x 17 Krypton-85 Production

Time After Discharge	Curies/Assembly		
	35 GWD/MTU	45 GWD/MTU	55 GWD/MTU
150 days	4720	5960	7160
1 year	4540	5740	6860
2 years	4250	5380	6460
3 years	4000	5050	6030
4 years	3740	4720	5670
5 years	3510	4430	5300
6 years	3290	4180	4980
7 years	3090	3890	4690
8 years	2890	3670	4390
9 years	2710	3430	4100
10 years	2540	3210	3850
Fission Product Volume at Discharge (l/assy @ STP)	47.8	61.3	74.5

Table 7-7i. Babcock & Wilcox 17 x 17 Xenon-131m Production

Time After Discharge	Curies/Assembly 35 GWD/MTU	45 GWD/MTU	55 GWD/MTU
150 days	1.92	2.19	2.33
1 year	7.63×10^{-6}	8.64×10^{-6}	9.26×10^{-6}
2 years	5.16×10^{-15}	5.85×10^{-15}	6.25×10^{-15}
3 years	3.48×10^{-24}	3.92×10^{-24}	4.21×10^{-24}
4 years	2.35×10^{-33}	2.66×10^{-33}	2.85×10^{-33}
5 years	1.59×10^{-42}	1.80×10^{-42}	1.93×10^{-42}
6 years	1.07×10^{-51}	1.21×10^{-51}	1.30×10^{-51}
7 years	7.26×10^{-61}	8.21×10^{-61}	8.79×10^{-61}
8 years	4.90×10^{-70}	5.56×10^{-70}	5.96×10^{-70}
9 years	3.31×10^{-79}	3.74×10^{-79}	4.00×10^{-79}
10 years	2.23×10^{-88}	2.53×10^{-88}	2.71×10^{-88}
Fission Product Volume at Discharge (l/assy @ STP)	461.00	587.00	709.00

Table 7-8a. General Electric 8 x 8RP Fuel Physical Parameters

Parameter	Value
Array configuration	8 x 8RP
Rod pitch, in.	0.641
Fuel composition	UO_2 + Gd
Fuel density, %th	.95 (Gd exc)
Fuel pin outside diameter, in.	.493
No. of pins per assembly	63
Cladding thickness, in.	.032
Cladding material	Zirc-2
Assembly outside dimensions, in. x in.	5.47 x 5.47
Assembly length, in.	176.2
Active fuel length, in.	150.0**
Axial location of fuel, in. from top	18.8
Representative weight/assembly, kg	278
Initial U content/assembly, kg	182.3
Tie plate smear thicknesses in. upper/in. lower	.57/.34
Time between cycles, days*	50
Time average power for each assembly, MW*	4.4
Assembly irradiation growth, in.	0.7

*Nominal

**6" Axial Blkt. top and bottom

Table 7-8b. General Electric 8 x 8RP Photon Spectrum
30000 MWD/MTU, 3 Cycles
15.07 MWD Average Burn-up
3.06 w/o U-235 Initial Enrichment

Twelve Group Energy Release Rates (MeV/sec) based on 1 cm of Active Fuel Length

E_{mean} (MeV)	Initial	150 Day	1 Year	2 Years	3 Years	4 Years	5 Years	6 Years	7 Years	8 Years	9 years	10 years
0.30	7.05×10^{13}	3.56×10^{11}	1.93×10^{11}	9.66×10^{10}	5.71×10^{10}	4.00×10^{10}	3.23×10^{10}	2.85×10^{10}	2.64×10^{10}	2.50×10^{10}	2.39×10^{10}	2.31×10^{10}
0.63	2.89×10^{14}	1.26×10^{13}	5.54×10^{12}	3.60×10^{12}	2.76×10^{12}	2.20×10^{12}	1.81×10^{12}	1.54×10^{12}	1.34×10^{12}	1.19×10^{12}	1.08×10^{12}	1.00×10^{12}
1.10	1.79×10^{14}	3.78×10^{11}	2.78×10^{11}	2.06×10^{11}	1.63×10^{11}	1.35×10^{11}	1.15×10^{11}	1.00×10^{11}	8.91×10^{10}	7.99×10^{10}	7.22×10^{10}	6.57×10^{10}
1.55	1.66×10^{14}	2.12×10^{11}	1.45×10^{11}	8.94×10^{10}	5.81×10^{10}	3.92×10^{10}	2.72×10^{10}	1.92×10^{10}	1.37×10^{10}	9.90×10^{09}	7.23×10^{09}	5.34×10^{09}
1.99	4.21×10^{13}	1.50×10^{11}	8.79×10^{10}	3.61×10^{10}	1.48×10^{10}	6.11×10^{09}	2.53×10^{09}	1.06×10^{09}	4.51×10^{08}	2.02×10^{09}	9.95×10^{07}	5.70×10^{07}
2.38	4.18×10^{13}	4.71×10^{08}	4.03×10^{03}	1.02×10^{-05}	2.57×10^{-14}	6.49×10^{-23}	1.64×10^{-31}	4.14×10^{-40}	1.04×10^{-48}	2.64×10^{-57}	6.66×10^{-66}	1.68×10^{-74}
2.75	2.10×10^{13}	8.16×10^{06}	6.99×10^{01}	1.76×10^{-07}	4.46×10^{-16}	1.12×10^{-24}	2.84×10^{-33}	7.17×10^{-42}	1.81×10^{-50}	4.57×10^{-59}	1.15×10^{-67}	2.91×10^{-76}
3.25	4.71×10^{13}	3.21×10^{06}	2.75×10^{01}	6.95×10^{-08}	1.76×10^{-16}	4.43×10^{-25}	1.12×10^{-33}	2.82×10^{-42}	7.13×10^{-53}	1.80×10^{-59}	4.55×10^{-68}	1.15×10^{-76}
3.70	3.82×10^{12}	0.	0.	0.	0.	0.	0.	0.	0.	0.	0.	0.
4.22	9.64×10^{12}	0.	0.	0.	0.	0.	0.	0.	0.	0.	0.	0.
4.70	5.02×10^{12}	0.	0.	0.	0.	0.	0.	0.	0.	0.	0.	0.
5.25	1.33×10^{12}	0.	0.	0.	0.	0.	0.	0.	0.	0.	0.	0.
Total	8.76×10^{14}	1.37×10^{13}	6.24×10^{12}	4.02×10^{12}	3.05×10^{12}	2.42×10^{12}	1.99×10^{12}	1.69×10^{12}	1.47×10^{12}	1.31×10^{12}	1.19×10^{12}	1.09×10^{12}

Table 7-8c. General Electric 8 x 8RP Photon Spectrum
40000 MWD/MTU, 4 Cycles
19.97 MWD Average Burn-up
3.67 w/o U-235 Initial Enrichment

Twelve Group Energy Release Rates (MeV/sec) based on 1 cm of Active Fuel Length

E_{mean} (MeV)	Initial	150 Day	1 Year	2 Years	3 Years	4 Years	5 Years	6 Years	7 Years	8 Years	9 years	10 years
0.30	6.87×10^{13}	3.49×10^{10}	1.92×10^{11}	1.02×10^{11}	6.41×10^{10}	4.77×10^{10}	4.01×10^{10}	3.61×10^{10}	3.38×10^{10}	3.22×10^{10}	3.09×10^{10}	2.98×10^{10}
0.63	2.82×10^{14}	1.45×10^{13}	7.30×10^{12}	4.95×10^{12}	3.81×10^{12}	3.03×10^{12}	2.48×10^{12}	2.09×10^{12}	1.81×10^{12}	1.60×10^{12}	1.45×10^{12}	1.33×10^{12}
1.10	1.73×10^{14}	4.85×10^{11}	3.70×10^{11}	2.80×10^{11}	2.25×10^{11}	1.88×10^{11}	1.61×10^{11}	1.41×10^{11}	1.26×10^{11}	1.13×10^{11}	1.02×10^{11}	9.27×10^{10}
1.55	1.59×10^{14}	2.73×10^{11}	1.93×10^{11}	1.22×10^{11}	8.11×10^{10}	5.56×10^{10}	3.88×10^{10}	2.75×10^{10}	1.97×10^{10}	1.42×10^{10}	1.04×10^{10}	7.65×10^{09}
1.99	4.06×10^{13}	1.40×10^{11}	8.21×10^{10}	3.37×10^{10}	1.39×10^{10}	5.71×10^{09}	2.37×10^{09}	9.96×10^{08}	4.31×10^{08}	1.99×10^{08}	1.03×10^{08}	6.31×10^{07}
2.38	3.96×10^{13}	4.53×10^{08}	3.88×10^{03}	9.81×10^{-06}	2.48×10^{-14}	6.25×10^{-25}	1.56×10^{-31}	3.99×10^{-40}	1.01×10^{-48}	2.54×10^{-57}	6.41×10^{-66}	1.62×10^{-74}
2.75	1.98×10^{13}	7.86×10^{06}	6.73×10^{01}	1.70×10^{-07}	4.29×10^{-16}	1.08×10^{-24}	2.74×10^{-33}	6.91×10^{-42}	1.74×10^{-50}	4.40×10^{-59}	1.11×10^{-67}	2.81×10^{-76}
3.25	4.70×10^{13}	3.10×10^{06}	2.65×10^{01}	6.70×10^{-08}	1.69×10^{-16}	4.27×10^{-25}	1.08×10^{-33}	2.72×10^{-42}	6.87×10^{-51}	1.73×10^{-59}	4.38×10^{-68}	1.11×10^{-76}
3.70	3.48×10^{12}	0.	0.	0.	0.	0.	0.	0.	0.	0.	0.	0.
4.22	8.75×10^{12}	0.	0.	0.	0.	0.	0.	0.	0.	0.	0.	0.
4.70	4.58×10^{12}	0.	0.	0.	0.	0.	0.	0.	0.	0.	0.	0.
5.25	1.21×10^{12}	0.	0.	0.	0.	0.	0.	0.	0.	0.	0.	0.
Total	8.48×10^{14}	1.57×10^{13}	8.14×10^{12}	5.49×10^{12}	4.19×10^{12}	3.32×10^{12}	2.72×10^{12}	2.30×10^{12}	1.99×10^{12}	1.76×10^{12}	1.59×10^{12}	1.46×10^{12}

Table 7-8d. General Electric 8 x 8RP Photon Spectrum
50000 MWD/MTU, 5 Cycles
25.27 MWD Average Burn-up
4.33 w/o U-235 Initial Enrichment

Twelve Group Energy Release Rates (MeV/sec) based on 1 cm of Active Fuel Length

E_{mean} (MeV)	Initial	150 Day	1 Year	2 Years	3 Years	4 Years	5 Years	6 Years	7 Years	8 Years	9 years	10 years
0.30	6.98×10^{13}	3.78×10^{11}	2.01×10^{11}	1.11×10^{11}	7.30×10^{10}	5.63×10^{10}	4.84×10^{10}	4.41×10^{10}	4.15×10^{10}	3.96×10^{10}	3.81×10^{10}	3.68×10^{10}
0.63	2.88×10^{14}	1.79×10^{13}	9.46×10^{12}	6.56×10^{12}	5.04×10^{12}	3.99×10^{12}	3.25×10^{12}	2.72×10^{12}	2.33×10^{12}	2.05×10^{12}	1.84×10^{12}	1.69×10^{12}
1.10	1.74×10^{14}	6.21×10^{11}	4.71×10^{11}	3.60×10^{11}	2.91×10^{11}	2.43×10^{11}	2.09×10^{11}	1.83×10^{11}	1.62×10^{11}	1.45×10^{11}	1.31×10^{11}	1.19×10^{11}
1.55	1.59×10^{14}	3.62×10^{11}	2.54×10^{11}	1.63×10^{11}	1.10×10^{11}	7.56×10^{10}	5.30×10^{10}	3.77×10^{10}	2.70×10^{10}	1.95×10^{10}	1.42×10^{10}	1.04×10^{10}
1.99	4.09×10^{13}	1.45×10^{11}	8.15×10^{10}	3.35×10^{10}	1.38×10^{10}	5.69×10^{09}	2.36×10^{09}	9.98×10^{08}	4.37×10^{08}	2.06×10^{08}	1.11×10^{08}	7.12×10^{07}
2.38	3.92×10^{13}	8.02×10^{08}	3.90×10^{03}	9.86×10^{-06}	2.49×10^{-14}	6.28×10^{-23}	1.59×10^{-31}	4.01×10^{-40}	1.01×10^{-48}	2.55×10^{-57}	6.45×10^{-66}	1.63×10^{-74}
2.75	1.96×10^{13}	1.39×10^{07}	6.77×10^{01}	1.71×10^{-07}	4.31×10^{-16}	1.09×10^{-24}	2.75×10^{-33}	6.94×10^{-42}	1.75×10^{-50}	4.43×10^{-59}	1.12×10^{-67}	2.82×10^{-76}
3.25	4.88×10^{13}	5.47×10^{06}	2.67×10^{01}	6.73×10^{-08}	1.70×10^{-16}	4.29×10^{-25}	1.08×10^{-33}	2.74×10^{-42}	6.91×10^{-51}	1.74×10^{-59}	4.40×10^{-68}	1.11×10^{-76}
3.70	3.30×10^{12}	0.	0.	0.	0.	0.	0.	0.	0.	0.	0.	0.
4.22	8.27×10^{12}	0.	0.	0.	0.	0.	0.	0.	0.	0.	0.	0.
4.70	4.34×10^{12}	0.	0.	0.	0.	0.	0.	0.	0.	0.	0.	0.
5.25	1.14×10^{12}	0.	0.	0.	0.	0.	0.	0.	0.	0.	0.	0.
Total	8.57×10^{14}	1.94×10^{13}	1.05×10^{13}	7.23×10^{12}	5.52×10^{12}	4.37×10^{12}	3.56×10^{12}	2.98×10^{12}	2.57×10^{12}	2.26×10^{12}	2.03×10^{12}	1.85×10^{12}

Table 7-8e. General Electric 8 x 8RP Average Neutron Source

Time After Discharge	n/sec per cm of Active Fuel Length		
	30 GWD/MTU	40 GWD/MTU	50 GWD/MTU
150 days	1.95×10^5	4.37×10^5	8.54×10^5
1 year	1.53×10^5	3.67×10^5	7.51×10^5
2 years	1.27×10^5	3.22×10^5	6.82×10^5
3 years	1.18×10^5	3.04×10^5	6.48×10^5
4 years	1.13×10^5	2.91×10^5	6.22×10^5
5 years	1.09×10^5	2.80×10^5	5.99×10^5
6 years	1.05×10^5	2.70×10^5	5.77×10^5
7 years	1.02×10^5	2.61×10^5	5.56×10^5
8 years	9.80×10^4	2.51×10^5	5.35×10^5
9 years	9.46×10^4	2.42×10^5	5.16×10^5
10 years	9.14×10^4	2.34×10^5	4.97×10^5

Table 7-8f. General Electric 8 x 8RP Decay Heat

Time After Discharge	Decay Heat (kw)		
	30 GWD/MTU	40 GWD/MTU	50 GWD/MTU
150 days	2.43	2.66	3.14
1 year	1.32	1.54	1.83
2 years	0.741	0.906	1.12
3 years	0.490	0.628	0.805
4 years	0.366	0.488	0.637
5 years	0.298	0.405	0.540
6 years	0.258	0.355	0.476
7 years	0.233	0.323	0.433
8 years	0.216	0.300	0.404
9 years	0.204	0.283	0.381
10 years	0.194	0.270	0.363

Table 7-8g. General Electric 8 x 8RP Tritium Production

Time After Discharge	Curies/Assembly 30 GWD/MTU	40 GWD/MTU	50 GWD/MTU
150 days	90.7	116	142
1 year	87.6	112	138
2 years	82.7	106	130
3 years	78.1	100	123
4 years	73.9	94.5	116
5 years	70.1	89.5	110
6 years	65.9	84.5	104
7 years	62.5	80.0	98.3
8 years	59.1	75.4	92.6
9 years	56.0	71.2	87.6
10 years	53.0	67.4	83.1
Fission Product Volume at Discharge (l/assy @ STP)	0.0715	0.0913	0.113

Liters

Table 7-8h. General Electric 8 x 8RP Krypton-85 Production

Time After Discharge	Curies/Assembly 30 GWD/MTU	40 GWD/MTU	50 GWD/MTU
150 days	1580	1970	2380
1 year	1520	1900	2280
2 years	1420	1780	2140
3 years	1340	1670	2010
4 years	1250	1570	1880
5 years	1170	1470	1760
6 years	1100	1380	1650
7 years	1030	1290	1550
8 years	968	1210	1450
9 years	907	1140	1360
10 years	850	1060	1280
Fission Product Volume at Discharge (l/assy @ STP)	16.7	21.9	27.4

19.3 for 35 GWD/MTU

Table 7-8i. General Electric 8 x 8RP Xenon-131m Production

Time After Discharge	Curies/Assembly 30 GWD/MTU	40 GWD/MTU	50 GWD/MTU
150 days	0.325	0.311	0.579
1 year	1.29×10^{-6}	1.24×10^{-6}	1.27×10^{-6}
2 years	8.72×10^{-16}	8.34×10^{-16}	8.57×10^{-16}
3 years	5.91×10^{-25}	5.64×10^{-25}	5.79×10^{-25}
4 years	4.00×10^{-34}	3.81×10^{-34}	3.92×10^{-34}
5 years	2.69×10^{-43}	2.57×10^{-43}	2.64×10^{-43}
6 years	1.82×10^{-52}	1.74×10^{-52}	1.79×10^{-52}
7 years	1.23×10^{-61}	1.17×10^{-61}	1.20×10^{-61}
8 years	8.31×10^{-71}	7.92×10^{-71}	8.15×10^{-71}
9 years	5.60×10^{-80}	5.37×10^{-80}	5.49×10^{-80}
10 years	3.78×10^{-89}	3.62×10^{-89}	3.71×10^{-89}
Fission Product Volume at Discharge (l/assy @ STP)	155.00	206.00	259.00

180.5 GWD/MTU

Section 8.0 References

8.1 "Safety Analysis of Modified NAC-1 Spent Fuel Shipping Cask," Revision 3, NAC-E-801.

8.2 "NLI-1/2 Cask Safety Analysis Report."

8.3 "Safety Analysis Report, NLI-10/24 Spent Fuel Shipping Cask."

8.4 "NAC-3K Spent Fuel Shipping Cask Safety Analysis Report," August 1978, 115-4-A1.

8.5 Title 10 of the Code of Federal Regulations, Part 71, May 1980.

8.6 "KENO-IV: An Improved Monte Carlo Criticality Program," (ORNL-4938).

8.7 AMPX-NITAWL, from "A Modular Code System for Generating Coupled Multigroup Neutron-Gamma Libraries from ENDF/F," (ORNL-TM-3706).

8.8 AMPX-XSDRNPM, from "A Modular Code System for Generating Coupled Multigroup Neutron-Gamma Libraries from ENDF/B," (ORNL-TM-3706).

8.9 "NULIF-Neutron Spectrum Generator, Few-Group Constant Calculator and Fuel Depletion Code," (BAW-426).

8.10 Gam-Thermos 123 Energy Group Neutron Cross Section Library, Oak Ridge National Laboratory.

8.11 "QAD: A Series of Point Kernal General Purpose Shielding Programs," October 1966, (LA 3573), R. E. Malenfant.

8.12 "HEATING-5 - An IBM 360 Heat Conduction Program" ORNL/CSD/TM-15, W. D. Turner, March 1977.

8.13 U.S. NRC Safety Guide 25 - "Assumptions Used for Evaluating Radiological Consequences of a Fuel Handling Accident in the Fuel Handling and Storage Facility for Boiling and Pressurized Water Reactors," March 1972.

8.14 ANSI 14.5 - 1977, "Leakage Tests on Packages for Shipment of Radioactive Materials."

8.15 "Regulations for Safe Transport of Radioactive Materials, Safety Series 6," IAEA-1973.

8.16 Certificate of Compliance No. 6698, Revision 16, NAC-1 Spent Fuel Shipping Cask.

8.17 Certificate of Compliance No. 9010, Revision 12, NLI-1/2 Spent Fuel Shipping Cask.

8.18 Certificate of Compliance No. 9023, Revision 3, NLI-10/24 Spent Fuel Shipping Cask.

Jai Shree Dadaji