OHIO DEPARTMENT OF HEALTH

246 North High Street
Post Office Box 118
Columbus, Ohio 43216-0118

Telephone (614) 466-3543
www.odh.state.oh.us

BOB TAFT
Governor

J. NICK BAIRD, M.D.
Director of Health

April 2, 2002

Traci Kime, Registration Specialist
Materials Safety and Inspection Branch
Division of Industrial and Medical Nuclear Safety
Office of Nuclear Material Safety and Safeguards
U.S. Nuclear Regulatory Commission
Washington, D.C. 20555-0001

Dear Ms. Kime:

Attached is a copy of sealed source and device registration OH-0522-D-0102-B, dated March 25, 2002, issued to Ohmart Corporation.

The registration OH-0522-D-0102-B on the SH-x series and SH-Fx series models has been amended in its entirety and supercedes all previous registrations on these devices. Please substitute this document for the existing one in the National SS&D Registry.

Thank you for your assistance in this manner.

Sincerely,

Robert E. Owen
Manager of Technical Services
Bureau of Radiation Protection

cf: SS&D File

nmss12

REGISTRY OF RADIOACTIVE SEALED SOURCES AND DEVICES
SAFETY EVALUATION OF DEVICE

NO: OH-0522-D-0102-B Date: **March 25, 2002** Page: 1 of 15
AMENDED IN ITS ENTIRETY

DEVICE TYPE: Density, Level & Weight Gauge

MODEL: SH-x series, SH-Fx series

MANUFACTURER/DISTRIBUTOR:

Ohmart/VEGA
4241 Allendorf
Cincinnati, OH 45209

SEALED SOURCE MODEL DESIGNATION:

Ohmart Source	Isotope:
A-2100	Co-60
A-2102	Cs-137
A-2104	Cs-137
A-57878	Cs-137
A-58804	Co-60 and Cs-137
A-58755	Cs-137
A-60324	Co-60
A-61234	**Co-60**

OHMART DEVICE MODEL	Cs-137 Max Activity	Co-60 Max Activity
SH-1A, SH-F1A	2.22 GBq (60 mCi)	Not applicable
SH-1B, SH-F1B	4.44 GBq (120 mCi)	Not applicable
SH-2, SH-F2	111 GBq (3 Ci)	925 MBq (25 mCi)
SH-3, SH-F3	740 GBq (20 Ci)	3.7 GBq (100 mCi)
SH-F4, **SH-F4-2**	Not applicable	**148 GBq (4 Ci)**

LEAK TEST FREQUENCY: 3 years

PRINCIPLE USE: (D) Gamma Gauge

CUSTOM DEVICE: _____ Yes ___XX___ No

DEVICE TYPE: Density, Level & Weight Gauge

DESCRIPTION:

The SH-x and SH-Fx series devices are identical except for the sealed source minimum qualifications. The SH-Fx series are designated as "fireproof" with the sealed sources meeting the 800°C **(1472°F)** temperature test resulting in a minimum ANSI N43.6 rating of 97C63232 (or earlier ANSI equivalent). The SH-x series are not designated as "fireproof" with sealed sources meeting the 400°C **(752°F)** temperature test resulting in a minimum ANSI N43.6 rating of 97C43232 (or earlier ANSI equivalent).

The sealed sources are doubly encapsulated in welded stainless steel capsules, except for the A-58755 source, which is singly encapsulated.

The source holders, except for the SH-F4, are dome shaped (when face down), made of gray iron, approximately 25 cm (10 inches) high by 20-25 cm (8-10 inches) wide. The devices weigh between 56-68 kg (125-150 pounds).

The primary difference between the device series is the amount of tungsten added for shielding. The SH-1A and SH-F1A series devices have a stainless steel source tube assembly loaded in the back of the device with no additional tungsten shielding. The SH-1B and SH-F1B series devices have a 3.8 cm (1.5 inch) diameter tungsten source holder to provide additional shielding around and behind the device. The SH-2 and SH-F2 series devices have a 7.6 cm (3 inch) diameter tungsten source holder and backside shielding. The SH-3 and SH-F3 devices have a 12.7 cm (5 inch) diameter tungsten source holder and backside shielding. The SH-F4 has a 18.4 cm (7.25 inch) diameter tungsten source holder and backside shielding.

The operation and internal components of the SH-F4 are very similar to the earlier SH-F models except that the outer housing is cubic in shape and fabricated from welded steel **or stainless steel**, and all major internal components used for shielding (including the rotor) are made from tungsten. The cube is 11 $^{11}/_{16}$ inches (30 cm) from the face to the back, and approximately 10 inches (25.4 cm) square. Additional steel shielding, or optionally tungsten, is welded to the inside of the housing to the rear of the base block.

The SH-F4 weighs approximately 370 pounds (168 kg).

DEVICE TYPE: Density, Level & Weight Gauge

DESCRIPTION: continued

The SH-F4-2 is a subset of the SH-F4 model series in that the SH-F4-2 is designed to be more water resistant than the SH-F4 series device. This is done by adding a drain hole with a threaded plug, adding a Viton rain shield, and an O-ring seal to the top of the shutter handle assembly.

The SH-F3 series device is also designated as water resistant. This is done by adding a drain hole with a threaded plug, adding a Viton rain shield, and an O-ring seal to the top of the shutter handle assembly to the prior SH-F3 devices. The shutter's rotor drive end (handle end) was revised to the more robust design of the SH-F4, including the double pin, double screw attachment of the rotor, and the slotted end of the rotor end shaft.

Two set screws were added to the SH-3, SH-F3 device that fit into notches on the tungsten billet to prevent its rotation that could interfere with the shutter operation.

The SH-3, SH-F3 and SH-F4-2 water resistant series devices also had the shaft bearing assemblies reversed. The shutter bearing raceways are now recessed into the shutter instead of being recessed into the housing.

All shafting in the **SH-F3 and** SH-F4 is made of stainless steel.

The front of the SH-F4 is tapped to provide mounting in lieu of clearance holes used on the other SH-x and SH-Fx models. The front cover plate of the **SH-F3 and SH-F4** is 20 gauge (0.038 in, 1 mm) stainless steel gasketed with Viton and secured with eight bolts.

The **SH-F3 and** SH-F4 shutter position indicator is laser etched into the stainless steel rotor cover plate. The shutter is locked closed by inserting a padlock shackle through the rotor shaft where it is retained by a detent in the rotor cover plate.

The SH-3, SH-F3 and SH-F4 devices use tapered roller bearings. The SH-3, SH-F3 and SH-F4 devices are anticipated to exceed 1.1 million cycles over a 20 year lifetime.

Prior registrations listed a SH-1 (SH-F1) device [originally rated for 444 MBq (120 mCi) Cs-137 and 278 MBq (7.5 mCi) of Co-60] which is now redesignated as the SH-1A (SH-F1A) device. The prior SH-1 (SH-F1) device was approved for use with Co-60, whereas neither the SH-1A (SH-F1A) nor SH-1B (SH-F1B) are authorized for Co-60 use.

DEVICE TYPE: Density, Level & Weight Gauge

DESCRIPTION: continued

The sources do not move within the devices. An 11.2 cm (4.4 inch) diameter shutter in front of the source is rotated to permit the radiation beam to pass out of the device. The beam fan angle may extend to ±45° from the source centerline provided that the included beam angle does not exceed 75 degrees. Typical beam configurations include 0° to 45° for density and level applications, and ±30° for density and weigh scale applications. The beam width is initially 12.7 mm (½ inch) wide and broadens at a rate of 10 degrees.

The beam width may be refined by reducing the collimator slot width (maximum width of 12.7 mm [1/2 inch] wide) in the shutter rotor for particular applications.

All the shutters are made of low carbon steel, except for the **SH-F3 and** SH-F4 as previously described. The SH-1B (SH-F1B) and SH-2 (SH-F2) shutters may have an optional tungsten block inserted into the shutter for additional shielding. The SH-3 (SH-F3) shutter has two tungsten blocks inserted into the shutter for additional shielding. The tungsten inserts in the shutter are held in place by a friction fit.

An aluminum, **stainless steel, or tungsten** source adapter is used to hold smaller sized sealed sources snugly in the larger source holes. This allows a variety of sealed source sizes to be used.

Two tamper resistant screws attach the shutter handle to the end of the shutter. The shutter rotates on a stainless steel shutter shaft fitted with a bronze sleeve bearing.

The cover plate to the front of the device (except the **SH-F3 and** SH-F4) is a sheet of either 1 mm (20 gauge) 304 stainless steel or 0.8 mm (1/32 inch) aluminum to keep foreign material out of the shutter assembly. Aluminum cover plates are not to be used in a location that is corrosive to bare aluminum.

The device is typically bolted to a mounting bracket, which is then bolted into position, except for the SH-F4 that is tapped for mounting.

The shutter position indicator is located under the shutter handle and when in position uncovers the words "ON" or "OFF" with 12 point (3.2 mm, 1/8 inch) high lettering. As one position is displayed

DEVICE TYPE: Density, Level & Weight Gauge

DESCRIPTION: continued

the other is covered. The position indicator is made of either (a) stainless steel attached by drive screws or rivets, or (b) the words are etched into the device.

Automatic actuators may be added to the device for remote shutter operation. The actuators may be either electric or air driven, and the actuator's applied torque is not to exceed 200 in-lb (16.7 ft-lb, 23 N-m).

When the air actuator is used, the ON/OFF indicators are those on the actuator as supplied by its manufacturer. When the electric actuator is used, the indicator reads OPEN/CLOSED and is on the actuator as supplied by its manufacturer.

An actuator adapter block, 25.4mm x 15.9mm wide and 18.7mm high (1" by 5/8" wide and 47/64" high) is mounted by two tamper resistant screws in lieu of the shutter handle for automatic actuators attached to the device. The actuator coupling fits over the actuator adapter block.

A slot may also be milled across the end of the shaft (¼" wide by ¼" deep) (6.4 mm wide by 6.4 mm deep) over the tapped holes for the two tamper resistant screws. A modified actuator adapter block fits into the slot.

When automatic actuators are mounted to the device, an ON/OFF label cover is attached to the shutter assembly and an ON/OFF label is attached to the device. This provides independent indication of the shutter position should the actuator become removed from the device.

The actuator mounting brackets are attached to the top of the shutter plate with screws going into the shutter retaining plate screw holes.

The adapter block can also be attached on top of the shutter handle with two tamper resistant screws to allow shutter operation with an extension device.

Neoprene [poly(2-chloro 2,3-butadiene), polychloroprene] may be added as a shock absorber to reduce vibration to the device. A half-inch Neoprene sheet is added to the front of the device

DEVICE TYPE: Density, Level & Weight Gauge

DESCRIPTION: continued

between the cover plate and the mounting bracket. A rectangular slot is cut out of the neoprene so as not to be in the radiation beam path. The upper temperature limit for neoprene is 76°C (170°F).

The shutter does not have a shutter stop and is free to rotate 360 degrees. The manual shutter rotor handle is too long to rotate past the mounting bracket thereby preventing the shutter from rotating 360 degrees for all device models except for the **SH-F3 and** SH-F4. The electric actuator has an internal stop, and the failsafe mode is a spring loaded return to the closed position. The air actuator has an internal stop, and the failsafe mode is a spring loaded return to the closed position.

On the manual shutter handle, the device may be held in the open position with a stainless steel positioning screw. The device can only be locked with a padlock in the off position. Both actuators can be locked in the off position.

Ohmart has determined that the source housings meet the requirements of DOT 7A Type A packaging. Documentation of test results and determinations are available to customers upon request.

The model A-61234 sealed source is an Amersham model number A-62558, capsule number X.2163 source and is approved for use the SH-F4 series only. The maximum activity for source is 148 GBq (4 Ci) of Co-60. The sealed source is 6.25 mm (0.25") in diameter and 12.15 mm (0.5") long and is doubly encapsulated activated Co-60 metal in stainless steel. The source achieved an ANSI N43.6 rating of C66646. Amersham maintains the special form certification of the source.

LABELING:

The caution radiation label is screwed into place with stainless steel drive screws or rivets over the source-retaining plug and contains the radiation symbol, isotope, activity, device model number, source serial number, name of the distributor, and the words "CAUTION - RADIOACTIVE MATERIAL". (There are no unique device serial numbers.)

DEVICE TYPE: Density, Level & Weight Gauge

LABELING: continued

When distributed to persons generally licensed, the device is additionally labeled in accordance with 10 CFR 32.51 or Agreement State equivalent. A copy of the General License Label text is in Attachment **7**.

The caution labels are made of stainless steel, 3" x 3.5" (7.6 cm x 8.9 cm), and are permanently attached by stainless steel screws or rivets to the device. The general license labels 3 5/8" x 5 ¼" (9.2 cm x 13.3 cm) are made of stainless steel and are permanently attached with stainless steel screws or rivets to the side of the device. Both labels are etched then filled with yellow enamel.

DIAGRAM:

Attachment 1 - Model SH-1A and SH-F1A
Attachment 2 - Model SH-1B and SH-F1B
Attachment 3 - Model SH-2 and SH-F2
Attachment 4 - Model SH-3 and SH-F3
Attachment 5 - Model SH-F4
Attachment 6 - Model SH-F4-2
Attachment **7** - General License Label text

CONDITIONS OF NORMAL USE:

The devices are used in industrial gauging applications. The devices are typically used in industrial process control environments for the measurement of properties of materials in a tank, vessel or conveyor belt. The devices are designed for the following environments:

Temperature	typically **-30**°C to 60°C (**-20**°F to 140°F)
Pressure	atmospheric
Vibration	zero to mild (less than 50 Hz at maximum 1/16 inch displacement)
Corrosion	zero to mild
Impact	accident conditions only
Fire	unlikely
Explosion	unlikely

The SH-F4 shall be limited to applications where it is not subjected to vibrational accelerations of five times gravity.

DEVICE TYPE: Density, Level & Weight Gauge

CONDITIONS OF NORMAL USE: continued

Ohmart uses a powder coat on the device housing exterior**s not constructed of stainless steel** to protect the devices and low carbon steel from corrosion in the normal operating environment.

The licensee should verify the condition of the device and its coating as described in the Users Manual, especially if the devices are subject to UV light, organic solvents, or strong acids or bases.

An external shroud, box, or shield may be constructed around the outside of the device to protect it from corrosive atmospheres or to moderate temperature extremes providing it does not obstruct the visibility of the ON/OFF indicators.

The expected useful life of these devices is 20 years.

PROTOTYPE TESTING:

The SH-1A (SH-F1A) [previously SH-1 and SH-F1] and SH-2 (SH-F2) devices have been manufactured since 1989. The device history includes incidents involving stuck shutters found during routine shutter tests. None of these incidents involved doses to workers or the public. The devices have also been in fires and explosions without leaking radioactive material.

The SH-1B (SH-F1B) and the SH-3 (SH-F3) devices are modified designs of the SH-1A (SH-F1A) and SH-2 (SH-F2) devices. These were not prototype tested since they are substantially similar to the existing devices in this registration.

Ohmart states that the generally licensed devices have achieved an ANSI N43.8-1979 (N538-1979) rating of 65-454-454-R2 for the manually operated shutter. Generally licensed devices with an air actuator reduces the ANSI rating to 33-454-454-R2 and an electric actuator reduces the ANSI rating to 34-454-454-R2.

Ohmart states that the specifically licensed devices (based on the higher activities) have achieved an ANSI N43.8-1979 (N538-1979) rating of 65-343-343-R2 for the manually operated shutter. Specifically licensed devices with an air actuator reduce the ANSI rating to 33-343-343-R2 and an electric actuator reduces the ANSI rating to 34-343-343-R2.

DEVICE TYPE: Density, Level & Weight Gauge

PROTOTYPE TESTING: continued

The life of the tapered roller bearings in the SH-F3, SH-3, and SH-F4 devices were demonstrated by engineering calculation.

EXTERNAL RADIATION LEVELS:

The SH-F4 was demonstrated by engineering calculation to survive a three foot fall onto a corner placing the highest stress and shear on bolts and welds.

Ohmart/Vega designs their devices to keep the stray (non-beam) radiation levels below 50 uSv/hr (5 mRem/hr) at 30.5 cm (12") from the surface of the device under typical loading conditions. Devices that exceed these limits must be specifically licensed.

The maximum radiation levels from the devices were measured and extrapolated by Ohmart to the maximum loading for each device and radionuclide. The maximum radiation level from the window is with the shutter closed, and the maximum reading from the side/back is the maximum of the shutter opened and closed positions. The following tables summarize the radiation profile data provided by Ohmart measured in accordance with ANSI N538-1979.

Table 1 SH-1A and SH-F1A with 2.22 GBq (60 mCi) of Cs-137

		Maximum Radiation Level			
Distance		From Window		From Side/Back	
(cm)	(inches)	(uSv/hr)	(mRem/hr)	(uSv/hr)	(mRem/hr)
5	1.97	220	22	310	31
30	11.81	34	3.4	47	4.7
100	39.37	4.0	0.4	6	0.6

Table 2 SH-1B and SH-F1B with 4.44 GBq (120 mCi) of Cs-137

		Maximum Radiation Level			
Distance		From Window		From Side/Back	
(cm)	(inches)	(uSv/hr)	(mRem/hr)	(uSv/hr)	(mRem/hr)
5	1.97	430	43	380	38
30	11.81	70	7	43	4.3
100	39.37	9	0.9	9	0.9

DEVICE TYPE: Density, Level & Weight Gauge

EXTERNAL RADIATION LEVELS:

Table 3 SH-2 and SH-F2 with 111 GBq (3 Ci) of Cs-137

		Maximum Radiation Level			
Distance		From Window		From Side/Back	
(cm)	(inches)	(uSv/hr)	(mRem/hr)	(uSv/hr)	(mRem/hr)
5	1.97	720	72	810	81
30	11.81	114	11.4	135	13.5
100	39.37	15	1.5	17	1.7

Table 4 SH-2 and SH-F2 with 925 MBq (25 mCi) of Co-60

		Maximum Radiation Level			
Distance		From Window		From Side/Back	
(cm)	(inches)	(uSv/hr)	(mRem/hr)	(uSv/hr)	(mRem/hr)
5	1.97	270	27	410	41
30	11.81	38	3.8	50	5
100	39.37	6	0.6	8	0.8

Table 5 SH-3 and SH-F3 with 740 GBq (20 Ci) of Cs-137

		Maximum Radiation Level			
Distance		From Window		From Side/Back	
(cm)	(inches)	(uSv/hr)	(mRem/hr)	(uSv/hr)	(mRem/hr)
5	1.97	430	43	3700	370
30	11.81	45	4.5	320	32
100	39.37	8	0.8	45	4.5

DEVICE TYPE: Density, Level & Weight Gauge

EXTERNAL RADIATION LEVELS: continued

Table 6 SH-3 and SH-F3 with 3.7 GBq (100 mCi) of Co-60

		Maximum Radiation Level			
Distance		From Window		From Side/Back	
(cm)	(inches)	(uSv/hr)	(mRem/hr)	(uSv/hr)	(mRem/hr)
5	1.97	170	17	710	71
30	11.81	17	1.7	61	6.1
100	39.37	3	0.3	8	0.8

Table 7 SH-F4 with 37 GBq (1 Ci) of Co-60

		Maximum Radiation Level			
Distance		From Window		From Side/Back	
(cm)	(inches)	(uSv/hr)	(mRem/hr)	(uSv/hr)	(mRem/hr)
5	1.97	26.7	2.67	146.7	14.67
30	11.81	6.6	0.66	26.7	2.67
100	39.37	ND	ND	5.3	0.53

Table 8 SH-F4-2 with 148 GBq (4 Ci) of Co-60 with additional shielding in place

		Maximum Radiation Level			
Distance		**From Window**		**From Side/Back**	
(cm)	**(inches)**	**(uSv/hr)**	**(mRem/hr)**	**(uSv/hr)**	**(mRem/hr)**
5	**1.97**	**107**	**10.7**	**165.3**	**16.53**
30	**11.81**	**27**	**2.7**	**42.7**	**4.3**
100	**39.37**	**ND**	**ND**	**10.7**	**1.07**

ND - not distinguishable from background

DEVICE TYPE: Density, Level & Weight Gauge

QUALITY ASSURANCE AND CONTROL:

Manufacture and distribution of all devices is conducted under Ohmart/Vega Corporation's ISO9001:1994 Quality Management Program certification number 107563 which covers the design, manufacturing and servicing of Ohmart nuclear measurement systems. Prior to distribution, in accordance with the ISO Quality Management Program, the following and other additional checks will be made of each device:

- All designs conform to information submitted in support of individual applications to include materials, dimensions within stated tolerances, manufacturing methods, and assembly methods.
- All units are leak tested to less than 185 Bq (5 nCi).
- All units are tested for proper operation of all safety features.
- All units are verified that radiation levels do not exceed the maximum limits stated in each device application.
- All units have the correct labeling on the device and inclusion of appropriate user manuals.
- Tamper resistant hardware is applied as required in the device application.

LIMITATIONS AND/OR OTHER CONSIDERATIONS OF USE:

The device may be distributed to specific or general licensees of the NRC or an Agreement State.

Handling, storage, use, transfer: To be determined by the licensing authority.

Devices containing sealed sources are to be disposed of only by specifically licensed individuals.

The shutter test, and other tests, shall be performed at the frequency described in the User's Manual. The device shall be leak tested every three years using techniques capable of detecting 185 Bq (5 nCi) of removable contamination.

The device is usually, but not always, mounted so that the beam cannot be accessed. Protective devices to limit access to the beam, by either the whole body or extremities, should be evaluated and addressed during licensing and/or installation.

DEVICE TYPE: Density, Level & Weight Gauge

LIMITATIONS AND/OR OTHER CONSIDERATIONS OF USE: continued

The generally licensed user is authorized to initially mount a device that is locked in the off position as shipped by Ohmart, and perform certain maintenance on the device as detailed in the device operation manual.

For applications where access to the interior of a vessel fitted with a generally licensed device is possible, the use of an interlock system is required to prevent access to the vessel interior while the shutter mechanism is in the open position. An exception to this requirement is for devices containing less than 100 mCi (3.7 GBq) of Cs-137.

The maximum torque applied to the shutter assembly by either an air or electric actuator is not to exceed 200 in-lbs (16.7 ft-lbs, 23 N-m).

Aluminum cover plates are not to be used in an environment corrosive to bare aluminum.

The devices and sealed sources are not to be subjected to conditions exceeding their ANSI classification. The devices are not to be subjected to continuous vibration or corrosive atmospheres exceeding those listed in "Conditions of Normal Use".

Reviewer note: Type A packages for Cs-137 are limited to 2 TBq (54.1 Ci) of special form and 0.5 TBq (13.5 Ci) of normal form radioactive materials per 49 CFR 173.435. The individual sealed source manufacturer **maintains any applicable** special form certification.

Reviewer note: the air actuator rating has a lower temperature limit of 0°C (32°F).

This registration sheet and the information contained within the references shall not be changed without the written consent of the Department.

SAFETY ANALYSIS SUMMARY:

Based on reviews of the SH-x and SH-Fx model series and the information and test data cited in the references, we conclude that the device is acceptable for specific and general licensing purposes.

DEVICE TYPE: Density, Level & Weight Gauge

SAFETY ANALYSIS SUMMARY: continued

Furthermore, we conclude that the device would be expected to maintain its containment integrity for normal conditions of use and accidental conditions, which might occur during uses specified in this certificate.

Ohmart has submitted sufficient information to provide reasonable assurance that for generally licensed devices:

Persons without training in radiological protection can safely operate the devices.

Under ordinary conditions of handling, storage, and use of the devices, the byproduct material contained in the device will not be released or inadvertently removed from the source housing.

Under ordinary conditions of handling, storage, and use of the devices, it is unlikely that any person will receive in any period of one year a dose in excess of:

- 5 mSv (500 mRem) TEDE,
- 50 mSv (5 Rem) DDE and CDE to any individual organ,
- 15 mSv (1.5 Rem) LDE to the eye, or
- 50 mSv (5 Rem) SDE to the skin or extremity.

Under accident conditions associated with handling, storage, and use of the device it is unlikely that any person would receive an external radiation dose or dose commitment in excess of the dose to the appropriate organ as specified in the following chart:

PART OF BODY	DOSE
Whole body; head and trunk; active blood-forming organs; gonads; or lens of eye	0.15 Sv (15 Rem)
Hands and forearms; feet and ankles; localized areas of skin averaged over areas no larger than 1 cm^2 (0.15 in^2)	2.0 Sv (200 Rem)
Other organs	0.50 Sv (50 Rem)

DEVICE TYPE: Density, Level & Weight Gauge

REFERENCES:

The following supporting documents for the SH-x and SH-Fx model series are hereby incorporated by reference and are made a part of this registry document:

Application with enclosures dated June 22, 1998,

General Device Criteria and enclosures dated June 28, 1998, and letters with enclosures dated January 14, 2000, January 31, 2000, March 31, 2000, April 20,2000, May 5, 2000, and May 1, 2001.

Device specific letters with enclosures dated, March 31, 2000, April 20, 2000, May 5, 2000, May 25, 2000, June 15, 2000, and email dated June 16, 2000.

Amendment letters with enclosures dated August 21, 2000, August 30, 2000, September 15, 2000, and email dated September 25, 2000.

Amendment request and letters with enclosures dated February 8, 2001, March 30, 2001, and May 1, 2001.

Amendment request dated January 18, 2002, two e-mails dated February 15, 2002, two e-mails dated February 21, 2002, and e-mail dated February 25, 2002.

The contents of this application and supporting references are not to be changed without prior consent by the Department.

ISSUING AGENCY:

Ohio Department of Health
Bureau of Radiation Protection

Date: March 25, 2002 Reviewer: Karl Von Ahn
Karl Von Ahn, RRPT

Date: March 25, 2002 Concurrence:
George Cicotte, HP3, B.S.

REGISTRY OF RADIOACTIVE SEALED SOURCES AND DEVICES
SAFETY EVALUATION OF DEVICE

NO: OH-0522-D-0102-B Date: **March 25, 2002** Attachment 1
AMENDED IN ITS ENTIRETY

Model SH-F1A or SH-1A

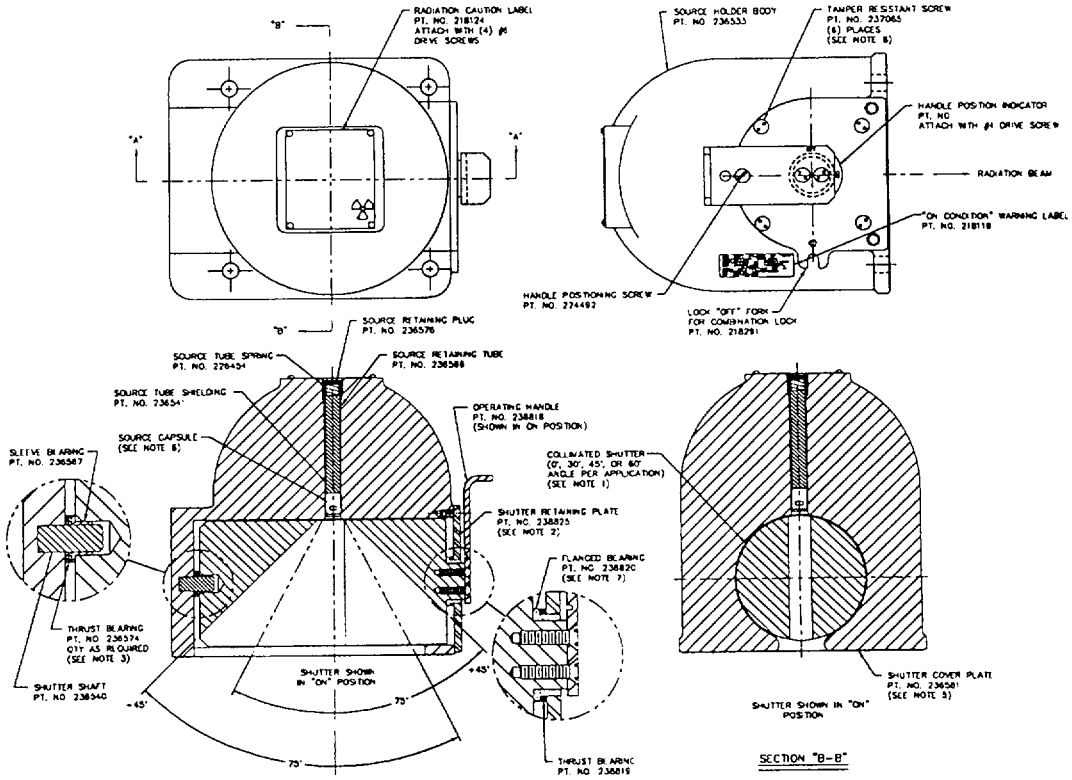

REGISTRY OF RADIOACTIVE SEALED SOURCES AND DEVICES
SAFETY EVALUATION OF DEVICE

NO: OH-0522-D-0102-B Date: **March 25, 2002** Attachment 2
AMENDED IN ITS ENTIRETY

Model SH-F1B or SH-1B

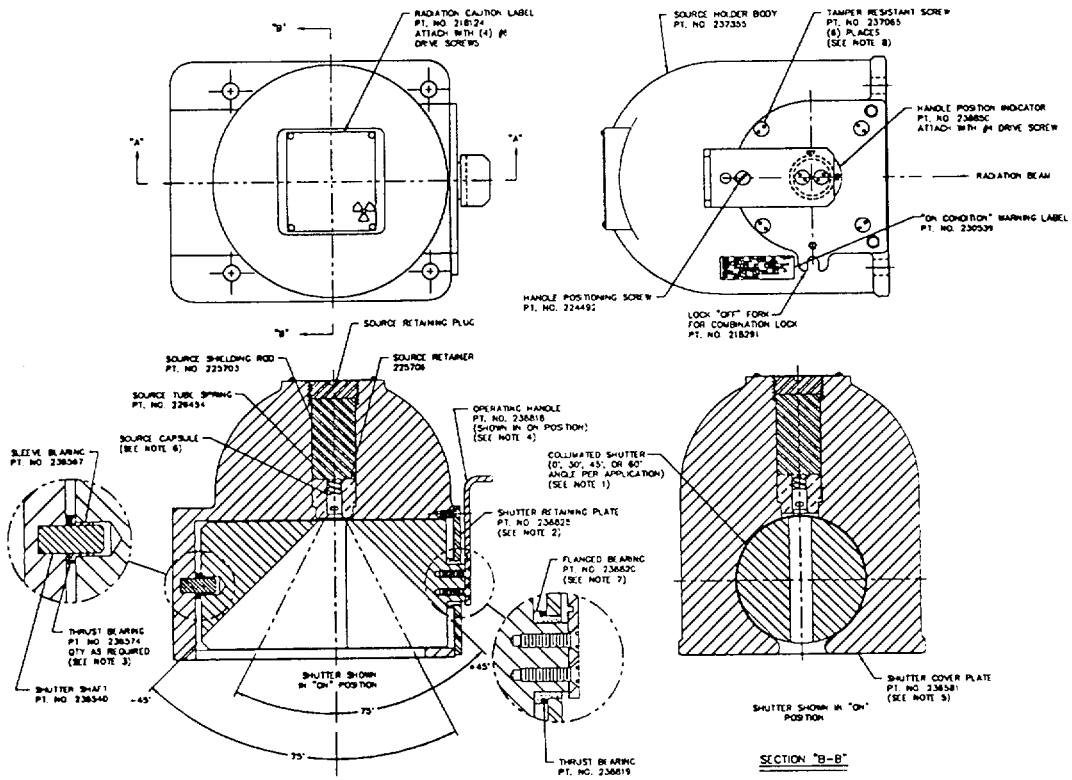

REGISTRY OF RADIOACTIVE SEALED SOURCES AND DEVICES
SAFETY EVALUATION OF DEVICE

NO: OH-0522-D-0102-B Date: **March 25, 2002** Attachment 3
AMENDED IN ITS ENTIRETY

Model SH-F2 or SH-2

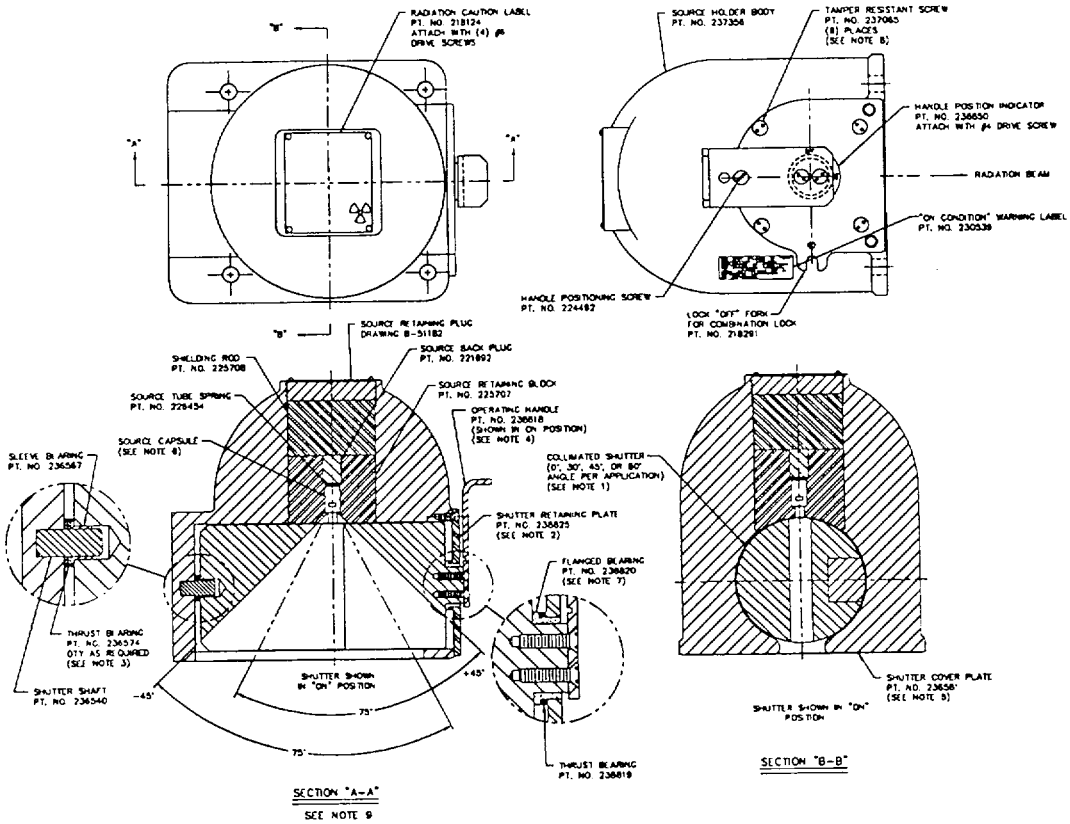

REGISTRY OF RADIOACTIVE SEALED SOURCES AND DEVICES
SAFETY EVALUATION OF DEVICE

NO: OH-0522-D-0102-B Date: **March 25, 2002** Attachment 4

AMENDED IN ITS ENTIRETY

Model SH-F3 or SH-3

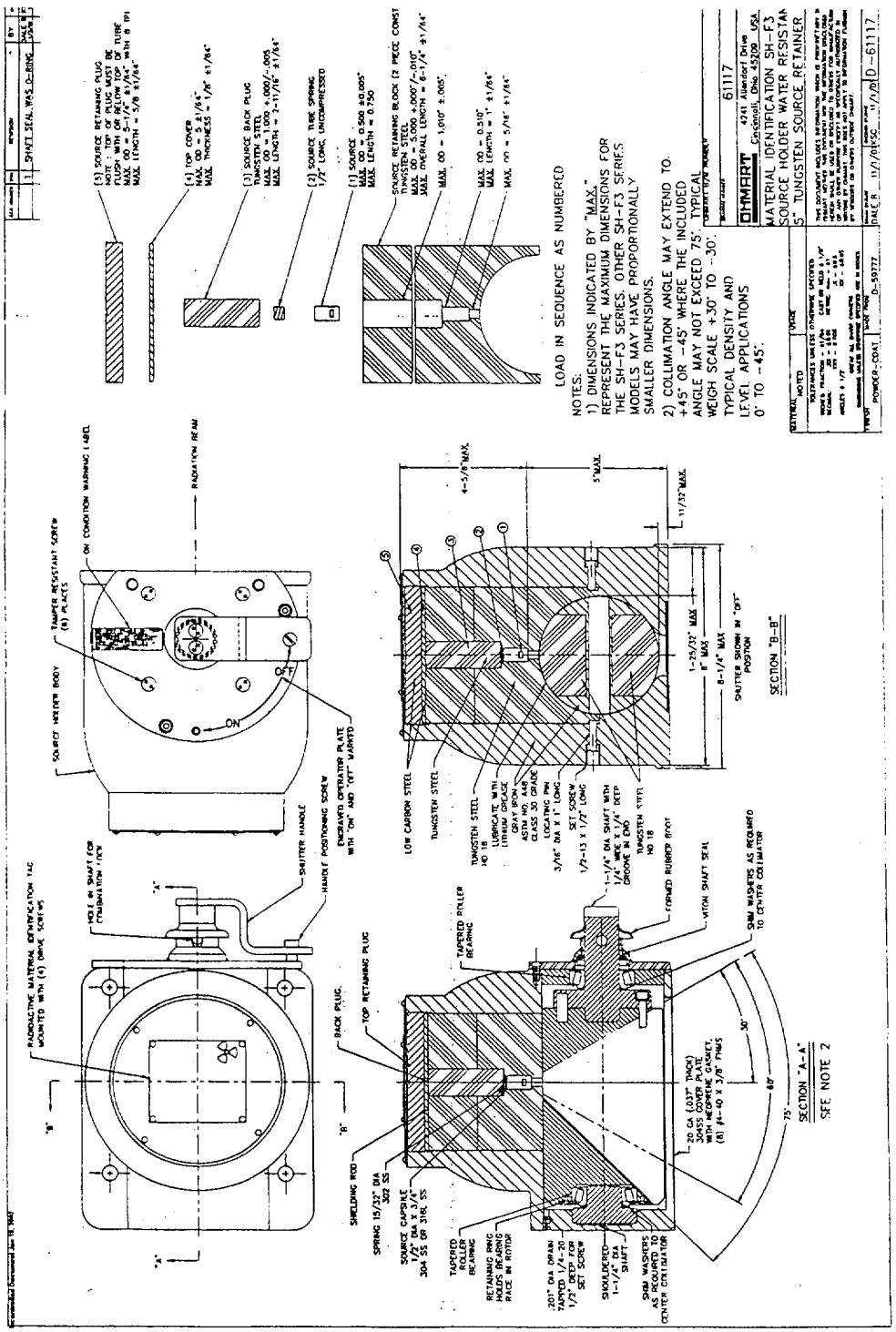

REGISTRY OF RADIOACTIVE SEALED SOURCES AND DEVICES
SAFETY EVALUATION OF DEVICE

NO: OH-0522-D-0102-B Date: **March 25, 2002** Attachment 5
AMENDED IN ITS ENTIRETY

Model SH-F4

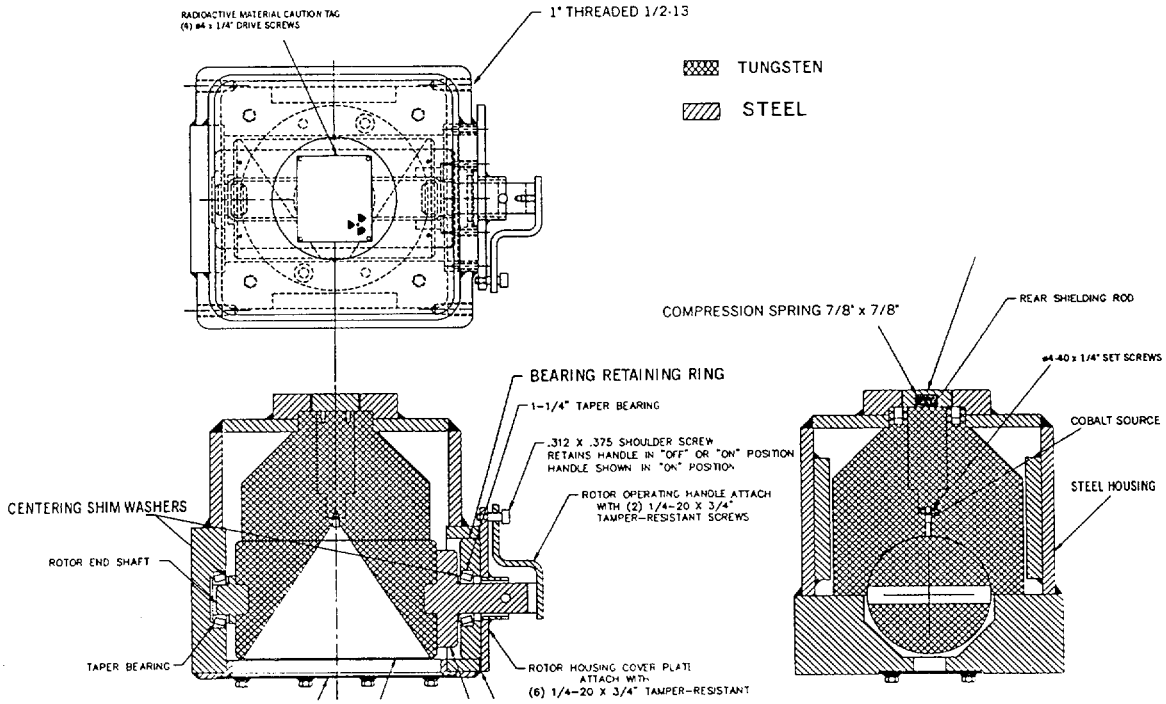

|<- 10" ->|
(25.4 cm)

REGISTRY OF RADIOACTIVE SEALED SOURCES AND DEVICES
SAFETY EVALUATION OF DEVICE

NO: OH-0522-D-0102-B Date: March 25, 2002 **Attachment 6**

AMENDED IN ITS ENTIRETY

SH-F4-2 Water Resistant

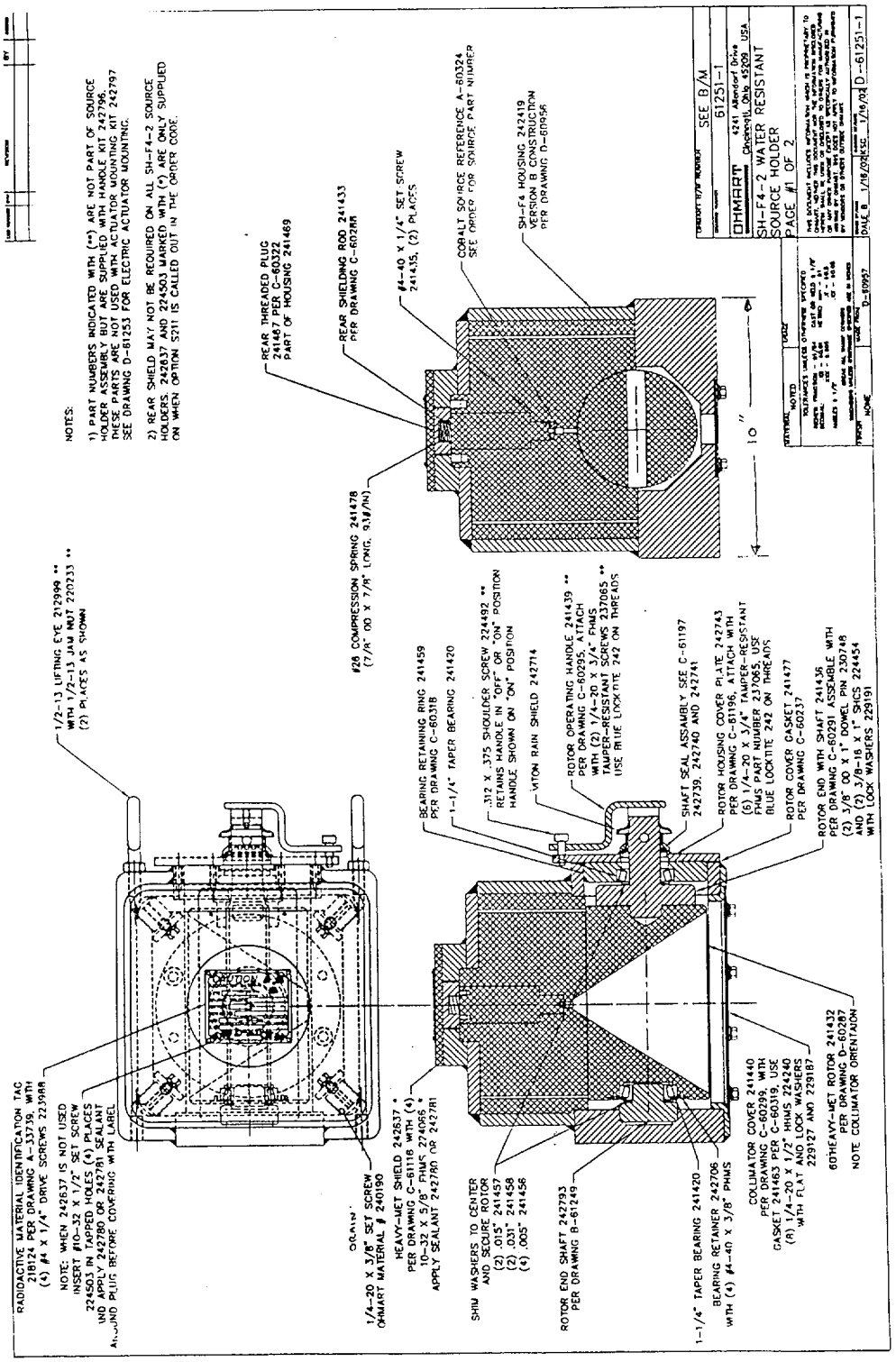

REGISTRY OF RADIOACTIVE SEALED SOURCES AND DEVICES
SAFETY EVALUATION OF DEVICE

NO: OH-0522-D-0102-B Date: **March 25, 2002** Attachment **7**
AMENDED IN ITS ENTIRETY

General License Label

The General License label contains the following text.

"FOR A DETAILED EXPLANATION OF THIS LABEL READ OHMART INSTRUCTION MANUAL RADIATION SAFETY SECTION.

RECEIPT, POSSESSION, USE AND TRANSFER OF THIS DEVICE ARE SUBJECT TO A GENERAL LICENSE OR EQUIVALENT AND REGULATIONS OF THE NRC OR AN AGREEMENT STATE.

ABANDONMENT OR DISPOSAL PROHIBITED UNLESS TRANSFERRED TO PERSONS SPECIFICALLY LICENSED BY THE NRC OR AN AGREEMENT STATE.

OPERATION PROHIBITED IF THERE IS INDICATION OF FAILURE OR DAMAGE TO SHIELDING, OR SOURCE CONTAINMENT.

ANY PERSON MAY MOUNT THIS DEVICE IN PLACE INITIALLY, PROVIDED THE ON-OFF MECHANISM IS LOCKED IN THE OFF POSITION. ALL OTHER DEVICE INSTALLATION, DISMANTLING, RELOCATION, REPAIR AND TESTING INVOLVING THE RADIOACTIVE MATERIAL, ITS SHIELDING AND CONTAINMENT SHALL BE PERFORMED BY PERSONS SPECIFICALLY LICENSED BY THE NRC OR AN AGREEMENT STATE.

DEVICE SHALL BE TESTED FOR RADIOACTIVE LEAKAGE AND PROPER FUNCTIONING OF THE ON-OFF MECHANISM, AND INDICATOR AT INSTALLATION AND AT SOURCE REPLACEMENT BY PERSONS SPECIFICALLY LICENSED BY THE NRC OR AN AGREEMENT STATE. THEREAFTER TESTING SHALL BE DONE AT NO LONGER THAN 3 YEAR INTERVALS, USING PROCEDURES STATED IN THE INSTRUCTION MANUAL.

LOSS, THEFT, OR TRANSFER OF THIS DEVICE AND FAILURE OF OR DAMAGE TO THE SHIELDING, OR THE SOURCE CONTAINMENT, MUST BE REPORTED TO THE NRC OR AN AGREEMENT STATE.

THIS LABEL SHALL BE MAINTAINED IN A LEGIBLE CONDITION, REMOVAL OF THIS LABEL IS PROHIBITED."