Entergy

Entergy Operations, Inc.
River Bend Station
5485 U.S. Highway 61
P. O. Box 220
St. Francisville, LA 70775
Tel 225 336 6225
Fax 225 635 5068

Rick J. King
Director
Nuclear Safety Assurance

RBG-45974

July 9, 2002

U.S. Nuclear Regulatory Commission
Attn: Document Control Desk
Washington, DC 20555

SUBJECT: River Bend Station, Unit 1
Docket No. 50-458
Non-proprietary TSAR in Support of Appendix K Measurement Uncertainty Recovery – Power Uprate Request
License Amendment Request (LAR) 2002-15

REFERENCE: Entergy letter dated May 14, 2002, License Amendment Request 2002-15

Dear Sir or Madam:

Pursuant to 10CFR50.90, Entergy Operations, Inc. (Entergy) requested approval of changes to the River Bend Station, Unit 1 (RBS) Operating License and Technical Specifications associated with an increase in the licensed power level. The changes involve a proposed increase in the power level from 3,039 MWt to 3091 MWt. Attachment 2 of that submittal is a proprietary version of GE Topical Safety Analysis Report (TSAR) NEDC-33051. As indicated in the original request Entergy would follow-up with a non-proprietary version of the TSAR when it became available. The attached report is a non-proprietary version and is provided to satisfy the requirements for public disclosure.

This submittal contains no new commitments and does not impact the previous no significant hazards review provided in support of the license amendment request. Should you have questions please call Mr. Jerry Burford at 601-368-5755.

Sincerely,

Rick J King
Director, Nuclear Safety Assurance

RJK/FGB

Attachments:
1. General Electric Topical Safety Analysis Report, NEDC-33051 (non-proprietary)

A001

cc: U. S. Nuclear Regulatory Commission
Region IV
611 Ryan Plaza Drive, Suite 400
Arlington, TX 76011

NRC Senior Resident Inspector
P. O. Box 1050
St. Francisville, LA 70775

Mr. Michael K. Webb
U.S. Nuclear Regulatory Commission
M/S OWFN 7D1
Washington, DC 20555

Mr. Prosanta Chowdhury
Program Manager – Surveillance Division
Louisiana Department of Environmental Quality
Office of Radiological Emergency Plan and Response
P. O. Box 82215
Baton Rouge, LA 70884-2215

Attachment 1

RBG-45974

Non-Proprietary Topical Safety Analysis Report,
GE NEDC-33051

GE Nuclear Energy
175 Curtner Ave., San Jose, CA 95125

NEDO-33051
Revision 0
DRF 0000-0000-0017
Class I
May 2002

SAFETY ANALYSIS REPORT
FOR
RIVER BEND STATION
THERMAL POWER OPTIMIZATION

Prepared by: E. D. Schrull

Approved by: Michael Dick, Project Manager
General Electric Company

Approved by: Robert Lundholm, Project Manager
Entergy Operations, Inc.

IMPORTANT NOTICE REGARDING CONTENTS OF THIS REPORT

Please Read Carefully

The only undertakings of the General Electric Company (GE) respecting information in this document are contained in the contract between Entergy Operations, Inc. (EOI) and GE, Contract Order No. NHC00530, effective June 15, 2001, and nothing contained in this document shall be construed as changing the contract. The use of this information by anyone other than EOI, or for any purpose other than that for which it is intended, is not authorized; and with respect to any unauthorized use, GE makes no representation or warranty, express or implied, and assumes no liability as to the completeness, accuracy or usefulness of the information contained in this document, or that its use may not infringe privately owned rights.

TABLE OF CONTENTS

ACRONYMS AND ABBREVIATIONS v

EXECUTIVE SUMMARY viii

1. INTRODUCTION 1-1

1.1 OVERVIEW 1-1
1.2 PURPOSE AND APPROACH 1-1
1.3 TPO PLANT OPERATING CONDITIONS 1-2
1.4 SUMMARY AND CONCLUSIONS 1-2

2. REACTOR CORE AND FUEL PERFORMANCE 2-1

2.1 FUEL DESIGN AND OPERATION 2-1
2.2 THERMAL LIMITS ASSESSMENT 2-1
2.3 REACTIVITY CHARACTERISTICS 2-1
2.4 STABILITY 2-1
2.5 REACTIVITY CONTROL 2-2

3. REACTOR COOLANT SYSTEM AND CONNECTED SYSTEMS 3-1

3.1 NUCLEAR SYSTEM PRESSURE RELIEF / OVERPRESSURE PROTECTION 3-1
3.2 REACTOR VESSEL AND INTERNALS 3-1
3.3 REACTOR RECIRCULATION SYSTEM 3-2
3.4 REACTOR COOLANT PRESSURE BOUNDARY PIPING 3-2
3.5 MAIN STEAM LINE FLOW RESTRICTORS 3-3
3.6 MAIN STEAM ISOLATION VALVES 3-3
3.7 REACTOR CORE ISOLATION COOLING SYSTEM 3-3
3.8 RESIDUAL HEAT REMOVAL SYSTEM 3-3
3.9 REACTOR WATER CLEANUP SYSTEM 3-4
3.10 BALANCE-OF-PLANT PIPING 3-4

4. ENGINEERED SAFETY FEATURES 4-1

4.1 CONTAINMENT SYSTEM PERFORMANCE 4-1
4.2 EMERGENCY CORE COOLING SYSTEMS 4-1
4.3 MAIN CONTROL ROOM ATMOSPHERE CONTROL SYSTEM 4-2
4.4 STANDBY GAS TREATMENT SYSTEM 4-2
4.5 POST-LOCA COMBUSTIBLE GAS CONTROL 4-3

5. INSTRUMENTATION AND CONTROL 5-1

5.1 NUCLEAR STEAM SUPPLY SYSTEM 5-1
5.2 BALANCE-OF-PLANT 5-2

6. ELECTRICAL POWER AND AUXILIARY SYSTEMS 6-1

6.1 ALTERNATING CURRENT POWER 6-1
6.2 DIRECT CURRENT POWER 6-2
6.3 FUEL POOL 6-2
6.4 WATER SYSTEMS 6-2
6.5 STANDBY LIQUID CONTROL SYSTEM 6-4
6.6 POWER-DEPENDENT HEATING VENTILATION AND AIR CONDITIONING 6-4
6.7 FIRE PROTECTION 6-5
6.8 SYSTEMS NOT AFFECTED BY TPO 6-5

7. POWER CONVERSION SYSTEMS 7-1

7.1 TURBINE-GENERATOR 7-1
7.2 CONDENSER AND STEAM JET AIR EJECTORS 7-1
7.3 TURBINE STEAM BYPASS 7-2
7.4 FEEDWATER AND CONDENSATE SYSTEMS 7-2

8. RADWASTE SYSTEMS AND RADIATION SOURCES 8-1

8.1 LIQUID AND SOLID WASTE MANAGEMENT 8-1
8.2 GASEOUS WASTE MANAGEMENT 8-1
8.3 RADIATION SOURCES IN THE REACTOR CORE 8-1
8.4 RADIATION SOURCES IN THE REACTOR COOLANT 8-2
8.5 RADIATION LEVELS 8-2

9. REACTOR SAFETY PERFORMANCE EVALUATIONS 9-1

9.1 REACTOR TRANSIENTS 9-1
9.2 DESIGN BASIS ACCIDENTS 9-1
9.3 SPECIAL EVENTS 9-1

10. OTHER EVALUATIONS 10-1

10.1 HIGH ENERGY LINE BREAK 10-1
10.2 MODERATE ENERGY LINE CRACK 10-1
10.3 EQUIPMENT QUALIFICATION 10-1
10.4 TESTING 10-2
10.5 OPERATOR TRAINING AND HUMAN FACTORS 10-3
10.6 PLANT LIFE 10-3
10.7 EMERGENCY OPERATING PROCEDURES 10-3

LIST OF TABLES

Table No.	Title
1-1	Current and TPO Plant Operating Conditions
6-1	TPO Plant Electrical Characteristics

LIST OF FIGURES

Figure No.	Title
1-1	TPO Heat Balance - Nominal
2-1	Power-Flow Operating Map For TPO

ACRONYMS AND ABBREVIATIONS

Term	Definition
AC	Alternating Current
ADS	Automatic Depressurization System
AL	Analytical Limit
ALARA	As Low As Is Reasonably Achievable
ANS	American Nuclear Society
ANSI	American National Standards Institute
AOO	Anticipated Operational Occurrence
APRM	Average Power Range Monitor
ASME	American Society Of Mechanical Engineers
ATWS	Anticipated Transient Without Scram
BHP	Brake Horse Power
BOP	Balance Of Plant
BWR	Boiling Water Reactor
CD	Condensate Demineralizer
CFR	Code Of Federal Regulations
CLTP	Current Licensed Thermal Power
CRD	Control Rod Drive
DBA	Design Basis Accident
DC	Direct Current
E1A	Stability Enhanced Option 1A
ECCS	Emergency Core Cooling System
EHC	Electro-Hydraulic Control
EOP	Emergency Operating Procedure
EQ	Environmental Qualification
FAC	Flow Accelerated Corrosion
FFWTR	Final Feedwater Temperature Reduction
FPCCS	Fuel Pool Cooling And Cleanup System
FW	Feedwater
FWHOOS	Feedwater Heater(s) Out-Of-Service
GE	General Electric Company
GL	Generic Letter
HELB	High Energy Line Break
HPCS	High Pressure Core Spray
HPSP	High Power Setpoint
HVAC	Heating, Ventilation, and Air Conditioning
HWC	Hydrogen Water Chemistry
ICF	Increased Core Flow
IPE	Individual Plant Evaluation
IRM	Intermediate Range Monitor
LOCA	Loss-Of-Coolant-Accident
LPCI	Low Pressure Coolant Injection

Term	Definition
LPCS	Low Pressure Core Spray
LPDES	Louisiana Pollutant Discharge Elimination System
LPSP	Low Power Setpoint
MCC	Motor Control Center
MELC	Moderate Energy Line
MELLLA	Maximum Extended Load Line Limit Analysis
MEOD	Maximum Extended Operating Domain
Mlb	Millions Of Pounds
MOV	Motor Operated Valve
MS	Main Steam
MSIV	Main Steam Isolation Valve
MSLB	Main Steam Line Break
MVA	Million Volt Amps
MWe	Megawatt-Electric
MWt	Megawatt-Thermal
NPSH	Net Positive Suction Head
NRC	Nuclear Regulatory Commission
NUREG	Nuclear Regulations (NRC Document)
OOS	Out-Of-Service
PCS	Pressure Control System
PSA	Probabilistic Safety Assessment
psi	Pounds Per Square Inch
psia	Pounds Per Square Inch - Absolute
psid	Pounds Per Square Inch - Differential
psig	Pounds Per Square Inch - Gauge
RBS	River Bend Station
RCIC	Reactor Core Isolation Cooling
RCPB	Reactor Coolant Pressure Boundary
RHR	Residual Heat Removal
RIPD	Reactor Internal Pressure Difference
RPCCW	Reactor Plant Component Cooling Water
RPCS	Rod Pattern Control System
RPT	Recirculation Pump Trip
RPV	Reactor Pressure Vessel
RTP	Rated Thermal Power
RVM	Reload Validation Matrix
RWCU	Reactor Water Cleanup
RWL	Rod Withdrawal Limiter
SBO	Station Blackout
SGTS	Standby Gas Treatment System
SJAE	Steam Jet Air Ejector
SLCS	Standby Liquid Control System
SLO	Single-Loop Operation
SRM	Source Range Monitor

Term	Definition
SRP	Standard Review Plan
SRV	Safety Relief Valve
SSW	Standby Service Water
TPCCW	Turbine Plant Component Cooling Water
TCV	Turbine Control Valve
T/G	Turbine-Generator
TPO	Thermal Power Optimization
TRM	Technical Requirements Manual
UHS	Ultimate Heat Sink
USAR	Updated Safety Analysis Report
VWO	Valves Wide Open

EXECUTIVE SUMMARY

This report summarizes the results of all significant safety evaluations performed that justify increasing the licensed thermal power at River Bend Station (RBS) to 3091 MWt. The requested license power level is 1.7% above the Current Licensed Thermal Power (CLTP) level of 3039 MWt.

Increasing the RBS rated thermal power (RTP) level is achieved by reducing the plant's thermal power uncertainty through improvements in feedwater flow measurement. This thermal power optimization (TPO) uprate involves realizing higher steam flow by increasing the reactor power along the current rod and core flow control lines. A limited number of operating parameters are changed, some setpoints are adjusted and instruments are recalibrated. Plant procedures are revised, and tests and measurements are performed in association with the power increase to the TPO RTP level. Evaluations of the reactor, engineered safety features, power conversion, emergency power, support systems, environmental issues, design basis accident analyses, and previous licensing evaluations were performed.

This report supports the conclusion that this TPO can be accommodated without a significant increase in the probability or consequences of an accident previously evaluated, without creating the possibility of a new or different kind of accident from any accident previously evaluated, and without exceeding any existing regulatory limits applicable to the plant, which might cause a significant reduction in a margin of safety. Therefore, the TPO described herein involves no significant hazards consideration.

1. INTRODUCTION

1.1 Overview

This report summarizes the results of all significant safety evaluations performed that justify increasing the licensed thermal power at River Bend Station (RBS) to 3091 MWt. The requested license power level is 1.7% above the Current Licensed Thermal Power (CLTP) level of 3039 MWt.

Increasing the RBS rated thermal power (RTP) level is achieved by reducing the plant's thermal power uncertainty through improvements in feedwater flow rate and temperature measurements. This thermal power optimization (TPO) uprate involves realizing higher steam flow by increasing the reactor power along the current rod and core flow control lines. A limited number of operating parameters are changed, some setpoints are adjusted and instruments are recalibrated. Plant procedures are revised, and tests and measurements are performed in association with the power increase to the TPO RTP level. Evaluations of the reactor, engineered safety features, power conversion, emergency power, support systems, environmental issues, design basis accident analyses and previous licensing evaluations were performed.

1.2 Purpose and Approach

RBS was originally licensed at 2894 MWt and was uprated by 5% to the CLTP level of 3039 MWt. The current safety analysis basis assumes, where required, that the reactor had been operating continuously at a power level at least 1.02 times the licensed power level. The TPO uprate is based on the evaluation of the improved feedwater (FW) flow rate and temperature measurements. Figure 1-1 illustrates the TPO power/flow operating map for RBS.

The TPO analysis basis ensures that the power-dependent margin prescribed by the Code of Federal Regulations (CFR) is maintained by meeting the appropriate regulatory criteria. NRC-approved or industry-accepted computer codes and calculational techniques are used to demonstrate meeting the applicable regulatory acceptance criteria

The approach to achieve a higher thermal power level is to increase core flow along the established rod lines. This strategy allows the plant to maintain most of the existing available core flow operational flexibility while assuring that low power related issues do not change because of the TPO uprate. Plant-unique evaluations were based on a review of plant design and operating data, as applicable, to confirm excess design capabilities, and, if necessary, identify any items which may require modifications associated with the TPO. For some items, bounding

analyses and evaluations demonstrate plant operability and safety. The scope and depth of the evaluation results provided herein were established based on the generic Boiling Water Reactor (BWR) TPO guidelines and unique features of the plant. The results of the applicable evaluations presented in this report were found to be acceptable.

1.3 TPO Plant Operating Conditions

The thermal-hydraulic performance of a BWR reactor core is characterized by the operating power, the operating pressure, the total core flow, and the coolant thermodynamic state. The rated values of these parameters are used to establish the steady-state operating conditions and as initial and boundary conditions for the required safety analyses. They are determined by performing heat (energy) balance calculations for the Reactor system at the TPO conditions.

The small changes in thermal-hydraulic parameters for the TPO are illustrated in Table 1-1. These parameters are generated for TPO by performing coordinated reactor and turbine-generator heat balances to relate the reactor thermal-hydraulic parameters to the increased plant FW and steam flow conditions. Figure 1-2 shows the TPO heat balance at TPO RTP and 100% rated core flow. Input from RBS operation is considered (e.g., steam line pressure drop) to match expected TPO uprate conditions.

1.4 Summary and Conclusions

This evaluation has investigated a TPO uprate to 101.7% of CLTP. The strategy for achieving higher power is to extend the current power/flow map. The plant licensing challenges have been reviewed to demonstrate how the TPO uprate can be accommodated without a significant increase in the probability or consequences of an accident previously evaluated, without creating the possibility of a new or different kind of accident from any accident previously evaluated, and without exceeding any existing regulatory limits or design allowable limits applicable to the plant which might cause a reduction in a margin of safety. The TPO uprate described herein involves no significant hazards consideration.

Table 1-1

Current and TPO Plant Operating Conditions

Parameter	Current Licensed Thermal Power	TPO Uprate Power
Thermal Power (MWt) (Percent of Current Licensed Power)	3039 100	3091 101.7
Vessel Steam Flow (Mlb/hr) (Percent of Current Rated)	13.198 100	13.424 102
FW Flow (Mlb/hr) (Percent of Current Rated)	13.173 100	13.399 102
Nominal Dome Pressure (psia)	1070	1070
Nominal Dome Temperature (°F)	552.9	552.9
FW Temperature (°F)	425.6	425.6
Full Power Core Flow Range (Mlb/hr) (Percent Of Current Rated)	68.6 to 90.4 81 to 107	70.5 to 90.4 83.4 to 107

Performance improvement features and/or equipment out-of-service (OOS) included in the TPO evaluations are:

1. Increased Core Flow (ICF)
2. Maximum Extended Operating Domain (MEOD)
3. Seven Safety Relief Valves (SRVs) Out-of-Service
4. Single Loop Operation (SLO)
5. 100°F Final Feedwater Temperature Reduction (FFWTR)
6. 3% SRV Setpoint Tolerance
7. Feedwater Heater Out-of-Service (FWHOOS)

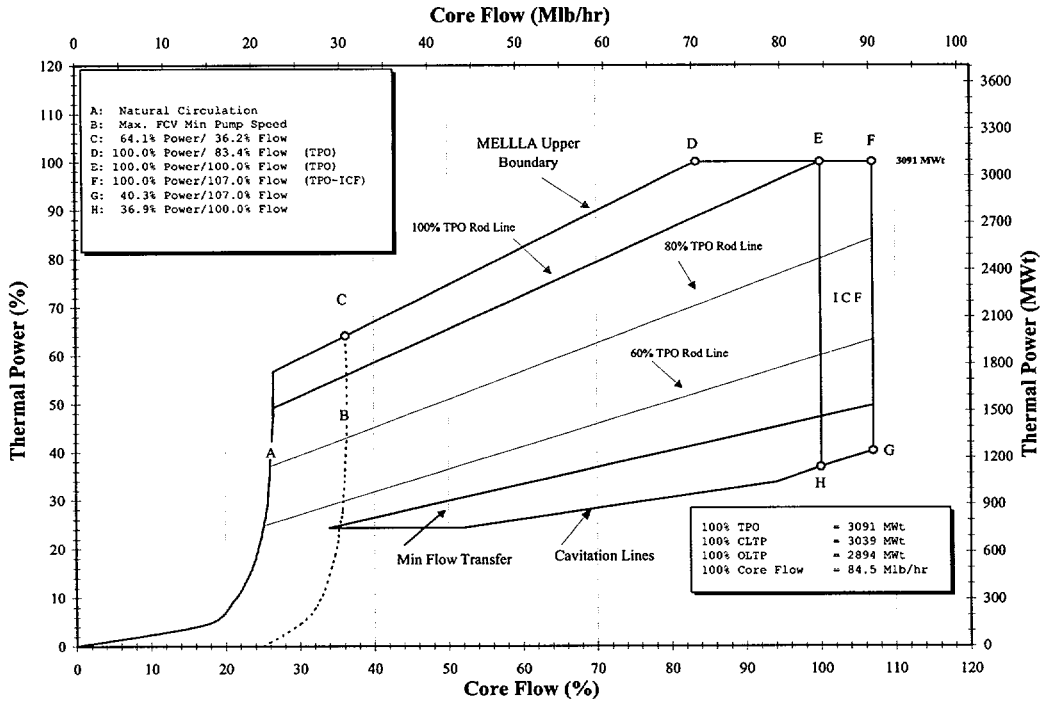

Figure 1-1 Power/Flow Map at TPO Uprate Power

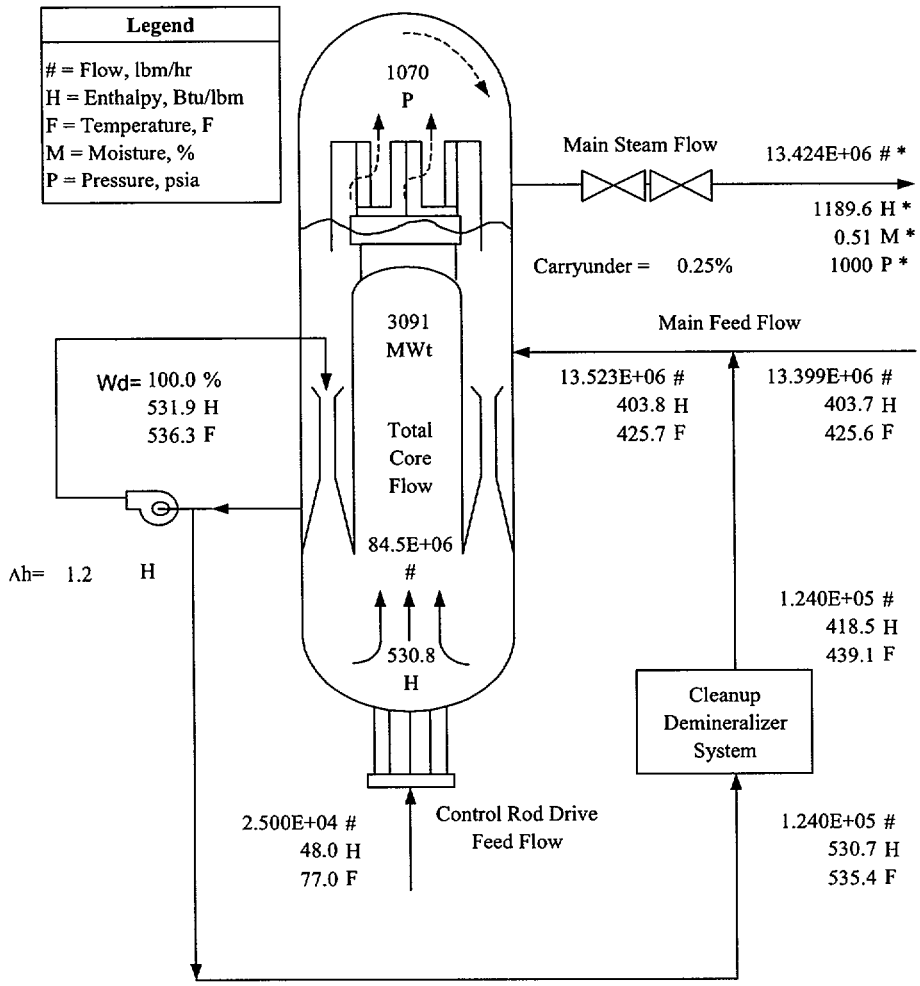

* Conditions at upstream side of TSV

Core Thermal Power	3091.0
Pump Heating	8.7
Cleanup Losses	-4.1
Other System Losses	-1.1
Turbine Cycle Use	3094.5 MWt

Figure 1-2 TPO Heat Balance – Nominal
(@ TPO Power and 100% Core Flow)

2. REACTOR CORE AND FUEL PERFORMANCE

2.1 Fuel Design and Operation

At the TPO RTP conditions, all fuel and core design limits continue to be met by planned deployment of fuel enrichment and burnable poison, and supplemented by core management control rod pattern and/or core flow adjustments. Revised loading patterns, larger batch sizes, and new fuel designs may be used to provide additional operating flexibility and maintain fuel cycle length.

2.2 Thermal Limits Assessment

Operating limits ensure that regulatory and/or safety limits are not exceeded for a range of postulated events [e.g., transients, loss-of-coolant accidents (LOCA)]. Cycle-specific core configurations, evaluated for each reload, confirm TPO RTP capability and establish or confirm cycle-specific limits, as is currently the practice. The evaluation of thermal limits for the TPO core shows that the current thermal margin design limits can be maintained.

The effect of maintaining the core thermal monitoring threshold at 23.8% RTP after the TPO uprate has been evaluated. This evaluation considered bundles operating in bounding high peaking conditions and concluded that these bundles would be operating with significant margin to the operating limit such that any transient initiated from below 23.8% RTP (post-uprate) would not violate the applicable criteria.

2.3 Reactivity Characteristics

All minimum shutdown margin requirements apply to cold shutdown ($\leq$ 212°F) conditions, and are maintained without change. The Technical Specifications cold shutdown margin requirements are not affected. Operation at higher power could reduce the hot excess reactivity during the cycle. This loss of reactivity does not affect safety, and is not expected to significantly affect the ability to manage the power distribution through the cycle to achieve the target power level.

2.4 Stability

RBS utilizes reactor stability Enhanced Option I-A (E1A). The E1A absolute high flow control line (which is used in the stability region boundary validation) does not change for the TPO uprate. Therefore, there is minimal effect on stability beyond the normal cycle-to-cycle core characteristic variations that are evaluated with the reload. TPO uprate does not significantly

affect stability. Reload stability evaluations continue to ensure acceptable stability performance and protection for future cores operating at TPO uprate conditions.

2.5 Reactivity Control

The Control Rod Drive (CRD) system introduces changes in core reactivity by positioning neutron absorbing control rods within the reactor. It is also required to scram the reactor by rapidly inserting withdrawn rods into the core. The CRD and CRD Hydraulic Systems and supporting equipment are not affected by the TPO uprate and no further evaluation of CRD performance is necessary.

3. REACTOR COOLANT SYSTEM AND CONNECTED SYSTEMS

3.1 Nuclear System Pressure Relief / Overpressure Protection

The pressure relief system prevents overpressurization of the nuclear system during abnormal operational transients. The plant SRVs along with other functions provide this protection. The current reload analysis has evaluated these overpressurization events at 102% of the TPO RTP level to demonstrate that the reactor vessel conformed to American Society Of Mechanical Engineers (ASME) Boiler and Pressure Vessel (B&PV) Code and plant Technical Specification requirements. No increase in nominal operating pressure is proposed for the RBS TPO uprate. Events involving the fast closure of the turbine stop/control valves with high neutron flux scram were also evaluated to confirm that they remain bounded by the main steam isolation valve (MSIV) closure event at the TPO uprate conditions.

The analysis for each fuel reload, which is current practice, confirms the capability of the system to meet the ASME design criteria.

3.2 Reactor Vessel and Internals

Evaluations of the reactor vessel and vessel internals concluded that the corresponding peak vessel loads and fluence conditions resulting from this TPO were within the existing design bases of these structures.

The estimated fluence for TPO conditions was conservatively increased above the Updated Safety Analysis Report (USAR) end-of-life value. Therefore, the higher fluence was used to evaluate the vessel against the requirements of 10 CFR 50 Appendix G. The vessel remains in compliance with the regulatory requirements during TPO conditions.

With regards to the structural integrity of the reactor vessel components, because there are no changes in the design conditions due to the TPO, the design stresses are unchanged and the ASME Code requirements applicable to RBS are still met. Further, because there is no pressure increase and only minor changes to some temperatures and flows, the analysis results for normal, upset, emergency, and faulted conditions show that all components meet their ASME Code requirements.

The Reactor Internal Pressure Differences (RIPDs) are more strongly affected by the maximum licensed core flow rate than by the power level. The maximum flow rate is not changed for the TPO uprate. The RIPDs for Normal and Upset conditions for the affected reactor internal components were determined to be acceptable for the TPO uprate. The Emergency and Faulted

evaluations of RIPD for TPO uprate are bounded by the current analyses performed at 102% of CLTP conditions.

The results of a vibration evaluation show that operation at 102% of CLTP and 107% of rated core flow is possible without any detrimental effects on the safety-related reactor internal components.

The expected performance of the steam separators and dryer was evaluated to ensure that the quality of the steam leaving the reactor pressure vessel continues to meet existing operational criteria at the TPO conditions. The results of the evaluation demonstrate that the steam separator-dryer performance remains acceptable at the TPO conditions.

3.3 Reactor Recirculation System

An evaluation of the Reactor Recirculation System (RRS) performance concluded that the existing design margin of the RRS is well within the slight changes in system temperature and pressure resulting from TPO.

3.4 Reactor Coolant Pressure Boundary Piping

The effects of TPO were evaluated for the reactor coolant piping systems which are part of the primary reactor coolant pressure boundary (RCPB) and which could be affected by a TPO-related increase in flow or operating temperature. These evaluations concluded that TPO does not have an adverse effect on the primary piping systems design. The slight increase in temperature associated with the TPO that affects piping and piping support loads does not result in load limits being exceeded.

The Main Steam (MS) and associated piping systems and Feedwater system piping are made of carbon steel, which can be affected by flow-accelerated corrosion (FAC). The integrity of high energy piping systems is assured by proper design in accordance with the applicable Codes and Standards. The plant has an established program for monitoring pipe wall thinning in single-phase and two-phase high-energy carbon steel piping. Other RCPB piping systems [reactor pressure vessel (RPV) bottom head drain, Residual Heat Removal (RHR), and portions of the Low Pressure Core Spray (LPCS), High Pressure Core Spray (HPCS), Reactor Water Cleanup (RWCU), and Standby Liquid Control (SLCS) systems] affected by FAC are also included in this program.

The carbon steel MS and FW piping can be affected by FAC. FAC is affected by changes in fluid velocity, temperature and moisture content. The RBS plant has an established program for monitoring pipe wall thinning in single and two-phase high energy carbon steel piping. The variation in velocity, temperature, and moisture content resulting from the TPO uprate are minor changes to parameters affecting FAC.

No changes to piping inspection scope and frequency are required to ensure adequate margin for the changing process conditions. The continuing inspection program takes into consideration adjustments to predicted material loss rates used to project the need for maintenance/replacement prior to reaching minimum wall thickness requirements. This program provides assurance that the TPO uprate has no adverse effect on high energy piping systems potentially susceptible to pipe wall thinning due to erosion/corrosion

3.5 Main Steam Line Flow Restrictors

An evaluation of the main steam line flow restrictors concluded that the existing design margin of the flow restrictors is well within the slight changes in conditions resulting from TPO.

3.6 Main Steam Isolation Valves

The MSIVs are part of the RCPB and must be able to close within specific limits at all design and operating conditions upon receipt of a closure signal. The MSIVs have been evaluated and are acceptable for TPO operation.

3.7 Reactor Core Isolation Cooling System

The Reactor Core Isolation Cooling (RCIC) system provides core cooling in the event of a transient where the RPV is isolated from the normal high pressure makeup system. The RCIC system has been evaluated and is acceptable for TPO operation.

3.8 Residual Heat Removal System

The RHR system is designed to restore and maintain the coolant inventory in the reactor vessel and to remove sensible and decay heat from the primary system and containment following reactor shutdown for both normal and post-accident conditions. Evaluations indicate that the implementation of TPO does not prevent any of the RHR modes from performing their intended functions.

3.9 Reactor Water Cleanup System

The RWCU system is designed to remove solid and dissolved impurities from recirculated reactor coolant, thereby reducing the concentration of radioactive and corrosive species in the reactor coolant. The performance requirements of the RWCU system are negligibly affected by TPO uprate. There is no significant effect on operating temperature and pressure conditions in the high-pressure portion of the system. Power transients are the primary source of challenge to the system, so safety and operational aspects of water chemistry performance are not affected by the TPO.

3.10 Balance-of-Plant Piping

Balance-of-plant (BOP) piping systems remain acceptable for TPO uprate conditions. These piping systems continue to satisfy design basis requirements in accordance with applicable design basis criteria, when considering the temperature, pressure, and flow rate effects resulting from TPO. RBS piping and related support systems remain within allowable stress limits. In addition, no piping or pipe support modifications are required due to the increased power level.

TPO operation results in some changes to parameters affecting flow-induced erosion/corrosion in those systems associated with the turbine cycle (e.g., Condensate, FW, MS). The evaluation of and inspection for flow-induced erosion/corrosion in BOP piping systems that is affected by FAC is addressed by compliance with NRC Generic Letter 89-08, "Erosion/Corrosion in Piping." TPO evaluations have confirmed that the TPO has no significant effect on flow-induced erosion/corrosion.

4. ENGINEERED SAFETY FEATURES

4.1 Containment System Performance

The previous containment evaluations are bounding for the TPO uprate because they were performed at 102% of CLTP. Although the nominal operating conditions increase slightly because of the TPO uprate, the required initial conditions for containment analysis inputs remain the same as in previous RBS licensing documentation.

All motor-operated valves (MOVs) included in the Generic Letter (GL) 89-10 Program were evaluated for the effects of the TPO. Because the previous analyses were based on 102% of CLTP, there are no increases in the pressure or temperature at which MOVs are required to operate. Therefore, the GL 89-10 MOVs remain capable of performing their design basis function.

The RBS response to GL 96-06 was also reviewed for the TPO uprate. The containment design temperatures and pressures in the current GL 96-06 evaluation are not exceeded under post-accident conditions for the TPO uprate. Therefore, the RBS response to GL 96-06 remains valid under TPO uprate conditions.

4.2 Emergency Core Cooling Systems

The Emergency Core Cooling Systems (ECCS) are designed to provide protection against hypothetical LOCAs caused by ruptures in the primary system piping. The functional capability of each system was determined to be acceptable for the TPO uprate.

The HPCS system is a motor driven high pressure injection system designed to pump water into the reactor vessel over a wide range of operating pressures. The primary purpose of the HPCS is to maintain reactor vessel coolant inventory in the event of a small break LOCA that does not immediately depressurize the reactor vessel. It also provides spray cooling for long-term core cooling in the event of a LOCA. For the TPO uprate with no change to the normal reactor operating pressure or the SRV setpoints, the HPCS system capability to provide the reactor coolant makeup function following a transient is not affected. The ability of the HPCS system to perform required safety functions is demonstrated with previous analyses based on 102% of CLTP. Therefore, all safety aspects of the HPCS system are within previous evaluations and the requirements are unchanged for TPO uprate conditions.

The LPCS system sprays water into the reactor vessel after it is depressurized. The primary purpose of the LPCS system is to provide reactor vessel coolant makeup during a large break

LOCA or any small break LOCA after the reactor vessel has depressurized. It also provides spray cooling for long-term core cooling in the event of a LOCA. The ability of the LPCS system to perform required safety functions is demonstrated with previous analyses based on 102% of CLTP. Therefore, all safety aspects of the LPCS system are within previous evaluations and the requirements are unchanged for TPO uprate conditions.

The Low Pressure Coolant Injection (LPCI) mode of the RHR system is automatically initiated in the event of a LOCA. The primary purpose of the LPCI mode is to provide reactor vessel coolant makeup during a large break LOCA or any small break LOCA after the reactor vessel has depressurized. The capability of the RHR system to perform the required safety functions in the LPCI mode is demonstrated with previous analyses based on 102% of CLTP. Therefore, all safety aspects of the RHR system LPCI mode are within previous evaluations and the requirements are unchanged for TPO uprate conditions.

The Automatic Depressurization System (ADS) uses safety/relief valves to reduce the reactor pressure following a small break LOCA when it is assumed that the high pressure systems have failed. This allows the LPCS and LPCI to inject coolant into the reactor vessel. The ADS initiation logic and valve control is not affected by the TPO uprate. The ability of the ADS system to perform required safety functions is demonstrated with previous analyses based on 102% of CLTP. Therefore, all safety aspects of the ADS are within previous evaluations and the requirements are unchanged for TPO uprate conditions.

Therefore, the ECCS performance under all LOCA conditions, and their analysis models, satisfy the requirements of 10 CFR 50.46 and 10 CFR 50 Appendix K.

4.3 Main Control Room Atmosphere Control System

The main control room atmosphere control system is not affected by the TPO and control room operator doses remain well below regulatory limits.

4.4 Standby Gas Treatment System

The Standby Gas Treatment System (SGTS) minimizes offsite and control room doses during venting and purging of the containment atmosphere under abnormal conditions. The current capacity of the SGTS was selected to maintain the secondary containment at a slight negative pressure during such conditions. This capability is not changed by TPO uprate conditions. The SGTS charcoal beds can accommodate design basis accident (DBA) conditions at 102% of

CLTP. Therefore, the system remains capable of performing its safety function for the TPO uprate.

4.5 Post-LOCA Combustible Gas Control

The Combustible Gas Control System (CGCS) maintains the post-LOCA concentration of oxygen or hydrogen in the containment atmosphere below the flammability limit. The metal available for reaction is unchanged by the TPO uprate and the hydrogen production due to radiolytic decomposition is unchanged because the system was previously evaluated for accident conditions at 102% of CLTP. Therefore, the current evaluation is valid for the TPO uprate.

5. INSTRUMENTATION AND CONTROL

5.1 Nuclear Steam Supply System

The TPO uprate involves no increase in reactor pressure, and the pressure-dependent setpoints do not require modification. However, increases in core thermal power and steam flow affect some instrument setpoints.

The average power range monitors (APRMs) are re-calibrated to the 3091 MWt power level, such that the indications read 100% at the new licensed power level.

TPO has little effect on the intermediate range monitor (IRM) overlap with the source range monitors (SRMs) and the APRMs. Using normal plant procedures, the IRMs may be adjusted, as required, so that overlap with the SRMs and APRMs remains adequate. No change is needed in the APRM downscale setting.

The Rod Pattern Control System (RPCS) supports the operator by enforcing rod patterns until reactor power has reached appropriate levels. The RPCS Rod Withdrawal Limiter (RWL) prevents excessive control rod withdrawal after reactor power has reached an appropriate level. The power-dependent setpoints for the RWL remain the same in terms of percent RTP.

The determination of instrument setpoints is based on plant operating experience, conservative licensing analyses, and/or (limiting) design/operating values. Each setpoint is selected with sufficient margin between the actual trip setting and the value used in the safety analysis [i.e., the analytical limit (AL)] to allow for instrument accuracy, calibration, and drift. Sufficient margin is provided wherever possible between the actual trip setting and the normal operating limit to ensure timely actuation of the necessary safety functions while avoiding spurious trips wherever possible during TPO operation.

The following instrument ALs remain unchanged due to implementation of the TPO:

- High-pressure scram
- The turbine stop valve closure scram, turbine control valve (TCV) fast closure scram, and RPT bypasses (in terms of percent RTP)
- Anticipated transient without scram (ATWS) RPT high pressure trip
- SRV setpoints
- Main steam high flow isolation (in differential pressure)
- The fixed and flow-referenced APRM trips

- The RPCS RWL Low Power Setpoint (LPSP) and High Power Setpoint (HPSP) (in terms of percent RTP)
- Low steam line pressure MSIV closure
- Reactor water level instruments
- Main steam line tunnel high temperature isolations
- Low condenser vacuum

5.2 Balance-Of-Plant

Operation of the plant at the TPO RTP level has minimal effect on the BOP system instrumentation and control devices. No safety-related BOP system setpoint changes are required as a result of the TPO uprate.

The Pressure Control System (PCS) provides a fast and stable response to steam flow changes to control reactor pressure within allowable values. The PCS consists of two subsystems, the turbine/generator (T/G) Electro-Hydraulic Control (EHC) system and the Steam Bypass Pressure Control System (SBPCS). The main T/G EHC system performs the speed/load control for the main T/G. The SBPCS performs the pressure control function.

Satisfactory reactor pressure control by the turbine pressure regulator and the TCVs requires an adequate flow margin between the TPO RTP operating condition and the steam flow capability of the TCVs at their maximum stroke (i.e., valves wide open (VWO)). The RBS plant has demonstrated acceptable pressure control performance at current rated conditions and has in excess of the ~2% steam flow margin needed for the TPO uprate. The existing T/G EHC and SBPCS electronic controls as designed for 100% CLTP conditions are adequate and require no electronic component changes for the TPO uprate conditions.

No modification is required to the steam bypass valves. No modifications are required to the operator interface indications, controls or alarm annunciators provided in the main control room. The required adjustments are limited to "tuning" of the control settings that may be required to operate optimally at the TPO uprate power level. Confirmation testing will be performed during power ascension.

An evaluation of the ability of the FW/level control system and FW control valves to maintain adequate water level control indicates that the ~2% increase in FW flow associated with TPO uprate is within the current control margin of these systems. The performance of the FW/level control systems will be confirmed during power ascension.

The instrument setpoints associated with system leak detection have been evaluated with respect to the slightly higher operating steam flow and feedwater temperature for the TPO. There is no significant effect on any leak detection system due to the TPO.

6. ELECTRICAL POWER AND AUXILIARY SYSTEMS

6.1 Alternating Current Power

The existing off-site electrical equipment was determined to be adequate for operation with the TPO-related electrical output, as shown in Table 6-1. The review concluded the following.

- The isolated phase bus duct is adequate for both rated voltage and low voltage current output.
- The main transformers and the associated switchyard components (rated for maximum transformer output) are adequate for the TPO uprate-related transformer output.

The existing grid stability analysis demonstrates conformance to General Design Criteria 17 (10 CFR 50, Appendix A). GDC 17 addresses on-site and off-site electrical supply and distribution systems for safety-related components. There is no significant effect on grid stability or reliability due to the TPO uprate. There are no modifications associated with the TPO uprate that would change the characteristics of the generator or revise the logic of the distribution systems.

The on-site power distribution system consists of transformers, buses, and switchgear. Alternating Current (AC) power to the distribution system is provided from the transmission system or from on-site diesel generators.

Station loads under normal operation/distribution conditions are computed based on equipment nameplate data with conservative demand factors applied. The only identifiable change in electrical demand is associated with condensate and FW pumps. These pumps experience increased flow due to the TPO uprate conditions. Because these changes are small, the motor demand for each of these loads remains bounded by the existing design. Accordingly, there are negligible changes in the on-site distribution system design basis loads or voltages due to the TPO conditions. The system environmental design bases are unchanged. Operation at the TPO RTP level is achieved by utilizing existing equipment operating at or below the nameplate rating; therefore, under normal conditions, the electrical supply and distribution components (e.g., switchgear, motor control centers (MCCs), cables) are adequate.

Station loads under emergency operation and distribution conditions (emergency diesel generators) are based on brake horsepower (BHP) or running kW. Emergency operation at the TPO RTP level is achieved by utilizing existing equipment operating at or below the nameplate rating and within the calculated BHP for the stated pumps; therefore, under emergency conditions the electrical supply and distribution components are adequate.

No increase in flow or pressure is required of any AC-powered ECCS equipment for the TPO uprate. Therefore, the amount of power required to perform safety-related functions (pump and valve loads) does not increase, and the current emergency power system remains adequate. The systems have sufficient capacity to support all required loads for safe shutdown, to maintain a safe shutdown condition, and to operate the engineered safety feature equipment following postulated accidents.

6.2 Direct Current Power

Operation at the TPO RTP level does not increase any loads beyond nameplate rating or design basis loading, nor revise any control logic; therefore the direct current (DC) power distribution system is adequate.

6.3 Fuel Pool

The Spent Fuel Pool (SFP) heat load increases slightly as a result of operation at the TPO RTP level. The TPO does not affect the heat removal capability of the Fuel Pool Cooling and Cleanup System (FPCCS). The TPO heat load is within the design basis heat load for the FPCCS, and does not result in a delay in removing the RHR system from service.

The TPO analysis assumes 18-month fuel cycle lengths as the basis. The results confirm the capability of the FPCCS to maintain adequate fuel pool cooling.

The normal radiation levels around the SFP may increase slightly during fuel handling operations. This increase is acceptable and does not significantly increase the operational doses to personnel or equipment. There is no effect on the design of the spent fuel racks, because the original SFP design temperature is not exceeded.

6.4 Water Systems

Evaluations of the service water systems were performed to determine the effect of the TPO on these systems. The results of these evaluations concluded that the safety-related and nonsafety-related service water system capabilities are adequate, and the environmental effects of TPO are controlled at the current level. This conclusion is based on the following considerations.

The safety-related Standby Service Water (SSW) system provides cooling water during and following a design basis accident. The safety-related performance of the SSW system during and following the most demanding design basis event (LOCA) does not change because the original LOCA analysis was based on 102% of CLTP. There is no change in the safety-related

heat loads for the SSW and the requirements are within the existing capacity of the RHR and associated SSW system.

Regarding the nonsafety-related heat loads, the major service water heat load increases from the TPO reflect an increase in main generator losses rejected to the stator water coolers and hydrogen coolers and the Turbine Plant Component Cooling Water (TPCCW) system. The thermal efficiency of the power generation cycle is not expected to change. Therefore, the increase in service water heat loads from these sources due to the TPO uprate operation is approximately proportional to the TPO (~1.7%). The design of these systems is adequate to handle the TPO uprate.

The main condenser, circulating water, and normal heat sink systems are designed to remove the heat rejected to the condenser and thereby maintain adequately low condenser pressure as recommended by the turbine vendor. TPO operation increases the heat rejected to the condenser and may reduce the difference between the operating pressure and the required minimum condenser vacuum. The performance of the main condenser was evaluated for operation at the TPO RTP. The evaluation confirms that the condenser, circulating water system, and heat sink are adequate for TPO operation.

The heat loads on the Reactor Plant Component Cooling Water (RPCCW) system do not increase significantly due to TPO because they depend on either reactor vessel water temperature or flow rates in the systems cooled by the RPCCW. The change in reactor vessel water temperature is minimal and there is no change in nominal reactor operating pressure. The RPCCW system experiences a slight heat load increase, primarily in the Fuel Pool Cooling heat exchangers. However, the system has adequate design margin to remove the additional heat. Therefore, the RPCCW system is acceptable for the TPO uprate.

The power-dependent heat loads on the TPCCW system increased by the TPO, are those related to the operation of the bus duct cooler and exciter coolers. The remaining TPCCW heat loads are not strongly dependent upon reactor power and do not increase significantly. The TPCCW system has sufficient capacity to assure that adequate heat removal capability is available for TPO operation.

The ultimate heat sink (UHS) is provided by the SSW cooling tower. As a result of operation at the TPO RTP level, the post-LOCA UHS water temperature increases slightly, primarily due to higher reactor decay heat. This results in a higher UHS evaporation rate. However, the ability of the UHS to perform required safety functions is demonstrated with previous analyses based on

102% of CLTP. Therefore, all safety aspects of the UHS are within previous evaluations and the requirements are unchanged for TPO uprate conditions. The current Technical Specifications for UHS limits are adequate, due to conservatism in the original design.

The RBS Louisiana Pollutant Discharge Elimination System (LPDES) Permit provides the effluent limitations and monitoring requirements for discharge wastewater at the site. Frequent monitoring of the discharge limits on free available chlorine and discharge water temperature ensures that permit limits are not exceeded. The TPO uprate has minimal effect on these parameters, and no changes to LPDES permit requirements are needed.

6.5 Standby Liquid Control System

The SLCS is designed to shut down the reactor from rated power conditions to cold shutdown in the postulated situation that all or some of the control rods cannot be inserted. It is a manually operated system that pumps a sodium pentaborate solution into the vessel to achieve a subcritical condition. The TPO uprate of 1.7% power does not affect shutdown or injection capability of the SLCS. Because the shutdown margin is reload dependent, the SLCS shutdown margin is confirmed for each reload core.

Implementation of the TPO has no adverse effect on the ability of the SLCS to mitigate an ATWS.

6.6 Power-Dependent Heating Ventilation and Air Conditioning

The Heating, Ventilation, and Air Conditioning (HVAC) systems that are potentially affected by the TPO uprate consist mainly of heating, cooling supply, exhaust and recirculation units in the turbine building, containment building and the drywell, auxiliary building, fuel handling building, control building, and the radwaste building. TPO results in a minor increase in the heat load caused by the slightly higher FW process temperature. The increased heat load is within the margin of the steam tunnel area coolers. In the drywell, the increase in heat load due to the FW process temperature is within the system capacity. In the turbine building, the maximum temperature increases in the FW heater bay and condenser areas are less than 2°F due to the increase in the FW process temperatures. In the fuel building, the increase in heat load due to a slight SFP cooling process temperature increase is within the margin of the area coolers. Other areas are unaffected by the TPO because the process temperatures and electrical heat loads remain constant.

Therefore, the power dependent HVAC systems are adequate to support the TPO uprate.

6.7 Fire Protection

Operation of the plant at the TPO RTP level does not affect the fire suppression or detection systems. There are no changes in physical plant configuration or combustible loading as a result of the TPO uprate. The safe shutdown systems and equipment used to achieve and maintain cold shutdown conditions do not change, and are adequate for the TPO uprate conditions. The operator actions required to mitigate the consequences of a fire are not affected. Therefore, the fire protection systems and analyses are not affected by the TPO uprate.

The RBS Appendix R fire event analysis assumes an operating power level of 102% of CLTP at the start of the postulated fire event, which bounds the TPO uprate conditions. The TPO uprate does not cause an increase in peak vessel bottom pressure, maximum containment pressure, or maximum containment temperature. In addition, peak cladding temperature remains well below 1500°F.

6.8 Systems Not Affected by TPO

Based on experience and previous NRC reviews, all systems that are significantly affected by TPO are addressed in this report. Other systems not addressed by this report are not significantly affected or are unaffected by TPO.

Table 6-1
TPO Plant Electrical Characteristics

Parameter	Value
Guaranteed Generator Output (MWe)	1043.1
Rated Voltage (kV)	22
Guaranteed Generator Output (MVA)	1151.1
Current Output (kA)	30.209
Isolated Phase Bus Duct Rating:	
Main Section (kA)	32
Branch Section (kA)	16
Main Transformers Rating (MVA)	1577

7. POWER CONVERSION SYSTEMS

The power conversion systems for the RBS plant were designed to accept the system and equipment flows resulting from continuous operation at 105% of CLTP rated steam flow.

7.1 Turbine-Generator

The RBS main T/G is designed with a maximum flow-passing and generator capability in excess of rated conditions to ensure that the design rated output is achieved. The excess capacity ensures that the T/G can meet rated conditions for continuous operating capability with allowances for variations in flow coefficients from expected values, manufacturing tolerances, and other variables that may affect the flow-passing capability of the unit.

The RBS turbine-generator has a flow margin of 6% at the rated throttle steam flow of 11.9 Mlb/hr at a throttle pressure of 987 psia and rated electrical power output of 1,043 MW at a power factor of 0.91. At TPO RTP, the rated throttle steam flow is increased to 12 Mlb/hr at a throttle pressure of 1000.5 psia. The increased throttle flow is approximately 105.8% of current rated. The uprated electrical output is 1,061 MW at a power factor of 0.922.

Steam specification calculations were performed to determine the TPO uprate turbine steam path conditions. These TPO uprate operating conditions are bounded by the previous analysis of the turbine and generator stationary and rotating components. Thus, operation is acceptable at the TPO uprate condition. In addition, valves, control systems, and other support systems were evaluated at the TPO operating conditions. The results of this evaluation shows that no modifications are needed to support operation at the TPO uprate condition.

The existing rotor missile analysis was performed at conditions that bound the TPO uprate conditions and is based on the NRC approved methodology in NUREG-1048, which applies to units with GE monoblock rotors.

7.2 Condenser and Steam Jet Air Ejectors

The condenser capability was evaluated for performance at the TPO uprate conditions based on current circulating water system flow. The design margin in the condenser heat removal capability can accommodate the additional heat rejected for operation at the TPO uprate conditions.

The design of the steam jet air ejectors (SJAEs) was based on the removal of non-condensable gases produced in the reactor and air leakage into the condenser for the VWO operating

conditions. Air leakage into the condenser does not increase as a result of the TPO uprate. The small increase in hydrogen and oxygen flows from the reactor does not affect the SJAE capacity because the design was based on operation at significantly greater than required flows. Therefore, the condenser air removal system is not affected by the TPO uprate and the mechanical vacuum pumps and SJAEs are adequate for operation at the TPO uprate conditions.

7.3 Turbine Steam Bypass

The Steam Bypass Pressure Control System (SBPCS) was originally designed for a steam flow capacity of 10% of the 100% rated flow. Because of the previous 5% power uprate at RBS (including a 30 psi reactor pressure increase), the steam bypass capacity was only slightly reduced in terms of rated flow. The steam bypass capacity at the TPO RTP remains $\geq$ 9.5% of the TPO RTP steam flow rate. The steam bypass system is non-safety-related. While the bypass capacity as a percent of rated steam flow is reduced, the actual steam bypass capacity is unchanged. The transient analyses that credit the turbine bypass system use a bypass capacity that is less than the actual capacity. Therefore, the turbine bypass capacity remains adequate for TPO operation.

7.4 Feedwater And Condensate Systems

The FW and condensate systems are designed to provide FW at the temperature, pressure, quality, and flow rate required by the reactor. These systems are not safety-related; however, their performance may have an effect on plant availability and the capability to operate reliably at the TPO uprate conditions.

A review of the RBS FW heaters, heater drains, condensate demineralizers, and pumps (FW and condensate) demonstrated that the components are capable of performing in the proper design range to provide the slightly higher TPO uprate FW flow rate at the desired temperature and pressure. The review also concluded that the FW turbine controls could maintain water level control at the uprated conditions.

During steady-state conditions, the condensate and FW systems have adequate net positive suction head (NPSH) for all of the pumps to operate without cavitation at the TPO uprate conditions.

The existing FW design pressure and temperature requirements are adequate. The FW heaters and associated regulating valves were originally designed for greater than warranted flow conditions.

The effect of the TPO uprate on the condensate demineralizers (CDs) was reviewed. The CDs experience slightly higher loadings at the TPO RTP level which result in slightly reduced run times. However, the reduced run times are acceptable.

8. RADWASTE SYSTEMS AND RADIATION SOURCES

8.1 Liquid and Solid Waste Management

Based on a review of plant operating effluent reports and the slight increase expected from TPO, it is concluded that the requirements of 10 CFR 20 and 10 CFR 50, Appendix I are met. Therefore, the TPO does not have an adverse effect on the processing of liquid and solid radwaste, and there are no significant environmental effects.

8.2 Gaseous Waste Management

The gaseous waste systems collect, control, process, store, and dispose of gaseous radioactive waste generated during normal operation and abnormal operational occurrences. The gaseous waste management systems include the Offgas system and various building ventilation systems. The systems are designed to meet the requirements of 10 CFR 20 and 10 CFR 50, Appendix I.

The waste gases originating in the reactor coolant consist mainly of hydrogen and nitrogen with trace amounts of radioactive gases. The function of the offgas system is to collect and isolate these radioactive noble gases, airborne halogens, and particulates, and to reduce their activity through decay.

The activity of airborne effluents released through building vents is not expected to increase significantly with the TPO. The release limit is an administratively controlled variable, and is not a function of core power. The gaseous effluents are well within limits at original power operation and remain well within limits following implementation of the TPO.

Radiolysis of water in the core region (i.e., formation of H_2 and O_2) increases linearly with core power, thus increasing the heat load on the recombiner and related components. Based on a heat balance for the offgas recombiner under current rated power conditions, the radiolytic hydrogen flow rate increases, but remains well within the design capacity of the system.

8.3 Radiation Sources in the Reactor Core

During power operation, the radiation sources in the core include radiation from the fission process, accumulated fission products, and neutron reactions as a secondary result of fission. Historically, these sources have been defined in terms of energy released per unit of reactor power. Therefore, the increase in the operating source term is no greater than the increase in power.

For post-operation evaluations, two sets of source data are applied. The first set is the gamma-ray source, which is used in shielding calculations for the core and for individual fuel bundles. This set of source terms increases in proportion to reactor power. The second set is used for post-accident evaluations, which are performed in compliance with regulatory guidance that applies different release and transport assumptions to different fission products. Plant-specific fission product inventories were developed and used in the evaluation of design basis accidents.

8.4 Radiation Sources in the Reactor Coolant

The radiation sources in the reactor coolant can be separated into three components: coolant activation products, activated corrosion products, and fission products. The coolant activation products for the TPO uprate are bounded by the existing design basis concentrations. Under the TPO uprate conditions, the production of activated corrosion products from metallic materials entering the water and being activated in the reactor region may increase. However, the TPO uprate corrosion product concentrations do not exceed the design basis concentrations. The design basis values for the fission product activity remain unchanged.

8.5 Radiation Levels

Normal operation radiation levels increase slightly for the TPO uprate. The RBS plant was designed with substantial conservatism for higher-than-expected radiation sources. Thus, the increase in radiation levels does not affect radiation zoning or shielding in the various areas of the plant because it is offset by conservatism in the design, source terms, and analytical techniques.

Post-operation radiation levels in most areas of the plant increase by no more than the percentage increase in power level. In a few areas near the SFP cooling system piping and the reactor water piping, where accumulation of corrosion product crud is expected, as well as near some liquid radwaste equipment, the increase could be slightly higher. Regardless, individual worker exposures will be maintained within acceptable limits by the site As Low As is Reasonably Achievable (ALARA) program, which controls access to radiation areas. Procedural controls compensate for increased radiation levels.

The change in core activity inventory resulting from the TPO uprate increases post-accident radiation levels by no more than approximately the percentage increase in power level. The slight increase in the post-accident radiation levels has no significant effect on the plant or the habitability of the Technical Support Center or Emergency Operations Facility. A review of

areas requiring post-accident occupancy (per NUREG-0737 Item II.B) concluded that access needed for accident mitigation is not significantly affected by the TPO uprate.

The normal operation gaseous activity levels remain essentially unchanged for the TPO uprate. The Technical Requirements Manual (TRM) limits implement the guidelines of 10 CFR 50 Appendix I. A review of the normal radiological effluent doses shows that at CLTP, the annual doses are less than 2% of the doses allowed by TRM limits. The TPO uprate does not involve significant increases in the offsite dose from noble gases, airborne particulates, iodine, tritium or liquid effluents. In addition, radiation from shine is not a significant exposure pathway. Therefore, the normal offsite doses are not significantly affected by operation at the TPO RTP level and remain below the limits of 10 CFR 20 and 10 CFR 50, Appendix I.

9. REACTOR SAFETY PERFORMANCE EVALUATIONS

9.1 Reactor Transients

The anticipated operational occurrence (AOO) events evaluated for TPO are organized into two major groups: fuel thermal margin events and transient overpressure events. The changes in fuel thermal limits due to the TPO uprate are expected to be within the normal cycle-to-cycle variation. Therefore, it is sufficient for RBS to perform the standard reload analyses at the first fuel cycle that implements the TPO uprate.

The limiting transient overpressure events were performed at 102% of CLTP. Therefore, they are applicable and bounding for the TPO uprate.

9.2 Design Basis Accidents

The radiological consequences of a DBA are basically proportional to the quantity of radioactivity released to the environment. This quantity is a function of the fission products released from the core as well as the transport mechanisms from the core to the release point. The radiological releases at the TPO RTP are generally expected to increase in proportion to the core inventory increase, which is in proportion to the power increase.

Radiological consequences due to postulated DBA events, as documented in the USAR, have previously been evaluated and analyzed to show that NRC regulations are met for 102% of the CLTP. Therefore, the radiological consequences associated with a postulated DBA from TPO uprate conditions are bounded by the previous analyses. The evaluation/analysis was based on the methodology, assumptions, and analytical techniques described in the RGs, the Standard Review Plan (SRP), where applicable, and in previous Safety Evaluations (SEs).

9.3 Special Events

The ATWS evaluation for the TPO uprate indicates that the plant response to an ATWS event is acceptable with regard to peak vessel bottom pressure and peak suppression pool temperature.

The RBS Station Blackout (SBO) evaluation has previously been performed assuming ≥ 102% of CLTP. Therefore, the postulated SBO scenarios for TPO operation are bounded by the current evaluations.

10. OTHER EVALUATIONS

10.1 High Energy Line Break

Because the TPO uprate system operating temperatures and pressures change only slightly, there is no significant change in High Energy Line Break (HELB) mass and energy releases. Therefore, the consequences of any postulated HELB would not significantly change. The postulated break locations remain the same because the piping configuration does not change due to the TPO uprate.

The HELB analysis evaluation was made for all systems evaluated in the USAR. At the TPO RTP level, HELBs outside the drywell would result in an insignificant change in the sub-compartment pressure and temperature profiles. The evaluation shows that the affected building and cubicles that support safety-related functions are designed to withstand the resulting pressure and thermal loading following an HELB at the TPO RTP.

Existing calculations for the development of pipe whip and jet impingement loads from the postulated HELBs have been determined to be bounding for the safe shutdown of the plant in the TPO condition. Therefore, existing pipe whip restraints and jet impingement shields, and their supporting structures are adequate for the TPO conditions.

There is no effect on the plant internal flooding analysis or safe shutdown analysis due to TPO.

10.2 Moderate Energy Line Crack

A review of the moderate energy line crack (MELC) evaluations to determine the effect of the TPO uprate concluded that there is no effect on the existing MELC evaluations.

10.3 Equipment Qualification

The safety-related electrical equipment was reviewed to assure that the existing qualification for the normal and accident conditions expected in the area where the devices are located remains adequate.

Environmental qualification (EQ) for safety-related electrical equipment located inside the containment is based on main steam line break accident (MSLBA) and/or DBA LOCA conditions and their resultant temperature, pressure, humidity, and radiation consequences, and includes the environment expected to exist during normal plant operation. The current accident conditions for temperature and pressure are based on analyses initiated from ≥ 102% of CLTP.

Normal temperatures may increase slightly near the FW and reactor recirculation lines and are be evaluated through the EQ temperature monitoring program. The current radiation levels under normal plant conditions also increase slightly. The current plant environmental envelope for radiation is not exceeded by the changes resulting from the TPO uprate.

Accident temperature, pressure, and humidity environments used for qualification of equipment outside containment result from a MSLB in the pipe tunnel, or other HELBs, whichever is limiting for each area. Some of the HELB pressure and temperature profiles increase by a small amount due to the TPO uprate conditions. However, there is adequate margin in the qualification envelopes to accommodate the small changes. Maximum accident radiation levels used for qualification of equipment outside containment are from existing analyses that bound the TPO conditions.

10.4 Testing

Pre-operational tests are not needed except as described below because no significant changes are required for any plant systems or components.

In preparation for operation at TPO uprated conditions, routine measurements of reactor and system pressures and flows are taken near 95% and 100% of CLTP, and at 100% of TPO RTP. The measurements will be taken along the same rod pattern line used for the increase to TPO RTP. Core power from the APRMs is rescaled to the TPO RTP before exceeding the CLTP and any necessary adjustments will be made to the APRM alarm and trip settings.

The turbine pressure controller setpoint will be readjusted at $\leq$ 95% of CLTP and held constant. The setpoint is reduced so the reactor dome pressure is the same at TPO RTP as for the CLTP. Adjustment of the pressure setpoint before taking the baseline power ascension data establishes a consistent basis for measuring the performance of the reactor and the turbine control valves.

Demonstration of acceptable fuel thermal margin will be performed prior to and during power ascension to the TPO RTP at each steady-state heat balance point defined above. Fuel thermal margin will be projected for the TPO RTP point after the measurements taken at 100% of CLTP to show the estimated margin. The thermal margin will be confirmed by the measurements taken at TPO RTP conditions. The demonstration of core and fuel conditions will be performed with the methods currently used at the plant.

Performance of the pressure and FW/level control systems will be recorded at each steady-state point defined above to demonstrate acceptable operational capability. Water level changes and

pressure setpoint changes will be used. If necessary, adjustments will be made to the controllers and actuator elements.

The increase in power for the TPO uprate is sufficiently small that large transient tests are not necessary. High power testing performed during initial startup demonstrated the adequacy of the safety and protection systems for such large transients. Operational occurrences have shown the unit response is clearly bounded by the safety analyses for these events. Analyses for previous BWR power uprates have shown that the incremental change in unit performance will be very small for TPO power uprates.

10.5 Operator Training and Human Factors

No additional training (apart from normal training) is required to operate the plant in the TPO uprate condition. For TPO uprate conditions, operator response to transient, accident and special events are not affected. Operator actions for maintaining safe shutdown, core cooling, containment cooling, etc., do not change for the TPO uprate. Minor changes to the power/flow map, Technical Specifications, and the like, will be communicated through normal operator training. Simulator changes and validation for the TPO uprate will be performed in accordance with ANSI/ANS 3.5-1985.

10.6 Plant Life

The longevity of most equipment is not affected by the TPO. There are various plant programs (EQ, FAC, Inservice Inspection) that deal with age-related components. These programs were reviewed, and do not significantly change for the TPO. In addition, the Maintenance Rule provides oversight for the other mechanical and electrical components, important to plant safety, to guard against age-related degradation.

10.7 Emergency Operating Procedures

The Emergency Operating Procedures (EOPs) action thresholds are plant unique and will be addressed using standard procedure updating processes. It is expected that a TPO uprate of 1.7% will have a negligible or no effect on the operator action thresholds and to the EOPs in general.