D.E. Carlson
#8

Large Test Facilities in HTR Development

Kurt Kugeler
Institut für Sicherheitsforschung und Reaktortechnik (ISR)
Forschungszentrum Jülich
Institute für Safety Research and Reactor Technology (ISR)
Research Centre Jülich

~~28~~ 4. July 2001

D-25

Important questions and work of the development program for HTR

- fuel elements for high helium temperatures, high burn-up and good fission product retention
- high temperature alloys
- main components of plants (compressors, turbines, recuperators, hot gas ducts)
- specific components in helium (bearing, penetrations, sealings, insulations)

Large test facilities

EVO - helium turbine power plant (50 MWel, 750 °C)

HHV - helium turbine test loop (corr. 300 MWel, 850 °C)

EVA-II - helium heated steam reformer (10 MW, 950 °C)

KVK - helium test loop for intermediate heat exchanger (10 MW, 950 °C)

EVO

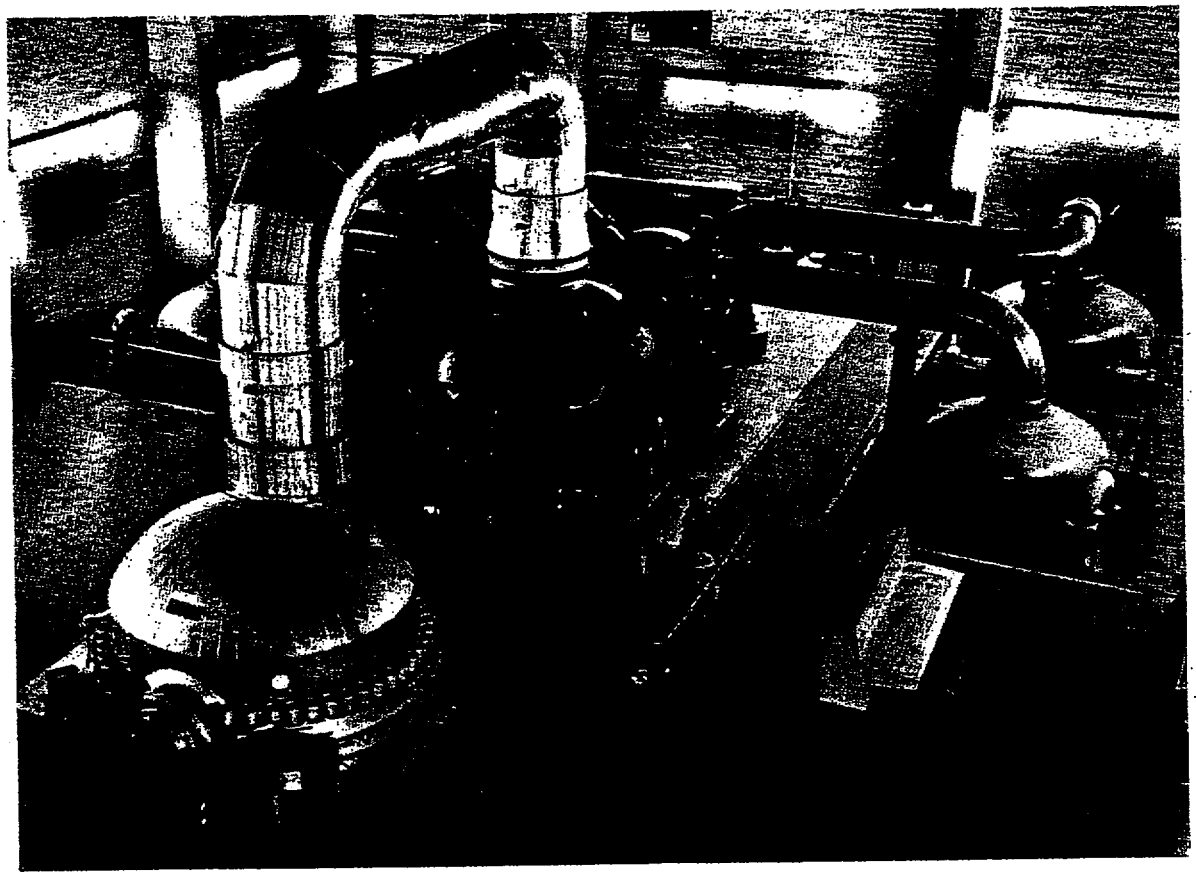

$P_{el} = 50\,MW$, $T_{He} = 750°C$

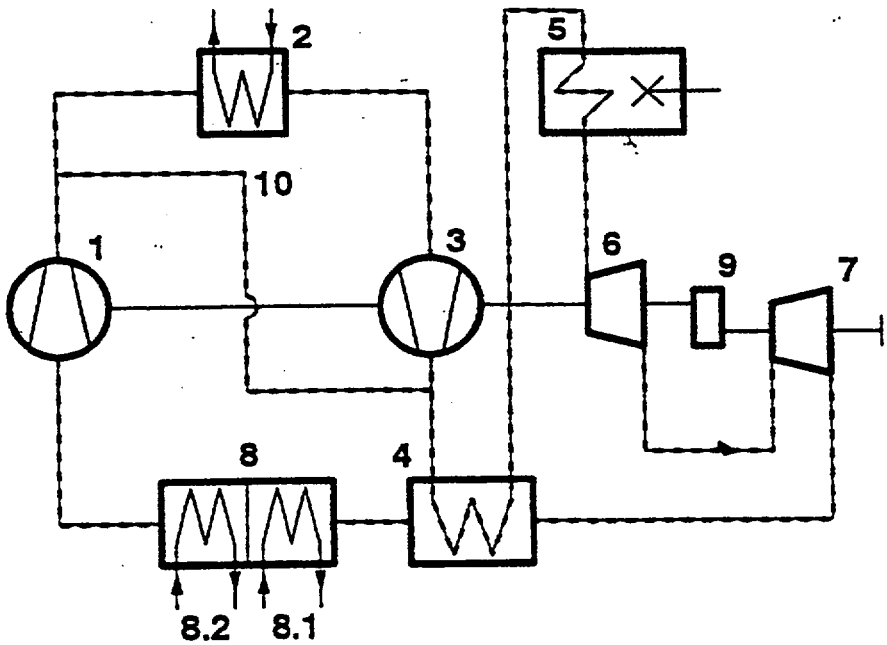

1 Low pressure compressor
2 Intercooler
3 High pressure compressor
4 Recouperator
5 Heater
6 High pressure turbine
7 Low pressure turbine
8 Precooler
8.1 District heat removal section
8.2 Precooler section
9 Gear
10 Regulation bypass

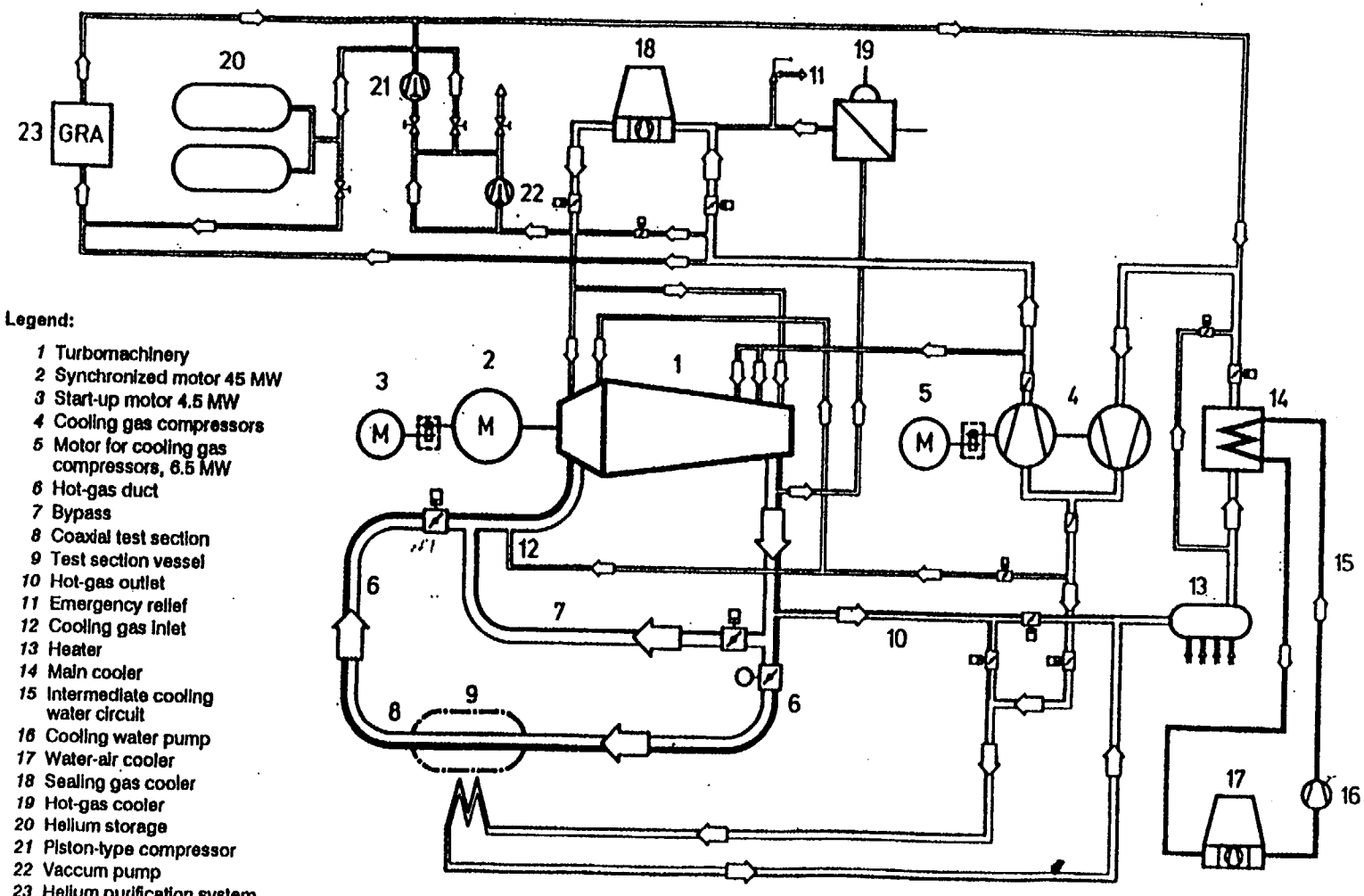

P_{turb} corr. to 300 MW_{el}, $T_{He} = 850°C$

EVA II

EVA II

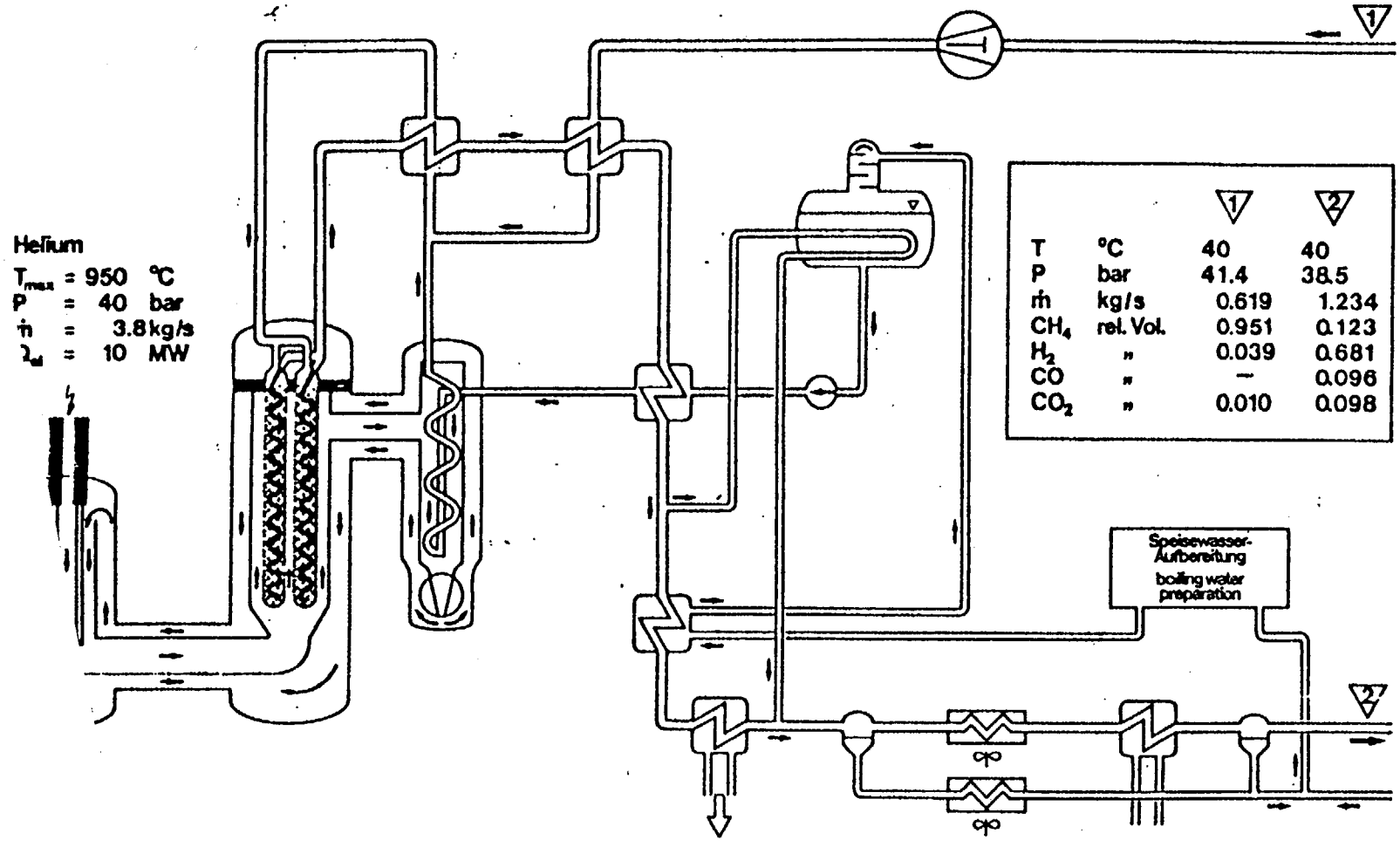

		1	2
T	°C	40	40
P	bar	41.4	38.5
ṁ	kg/s	0.619	1.234
CH_4	rel. Vol.	0.951	0.123
H_2	"	0.039	0.681
CO	"	—	0.096
CO_2	"	0.010	0.098

$P = 10\,MW$, $T_{He} = 950\,°C$

Coal Gasification with Heat from HTR

materials for the gasifier

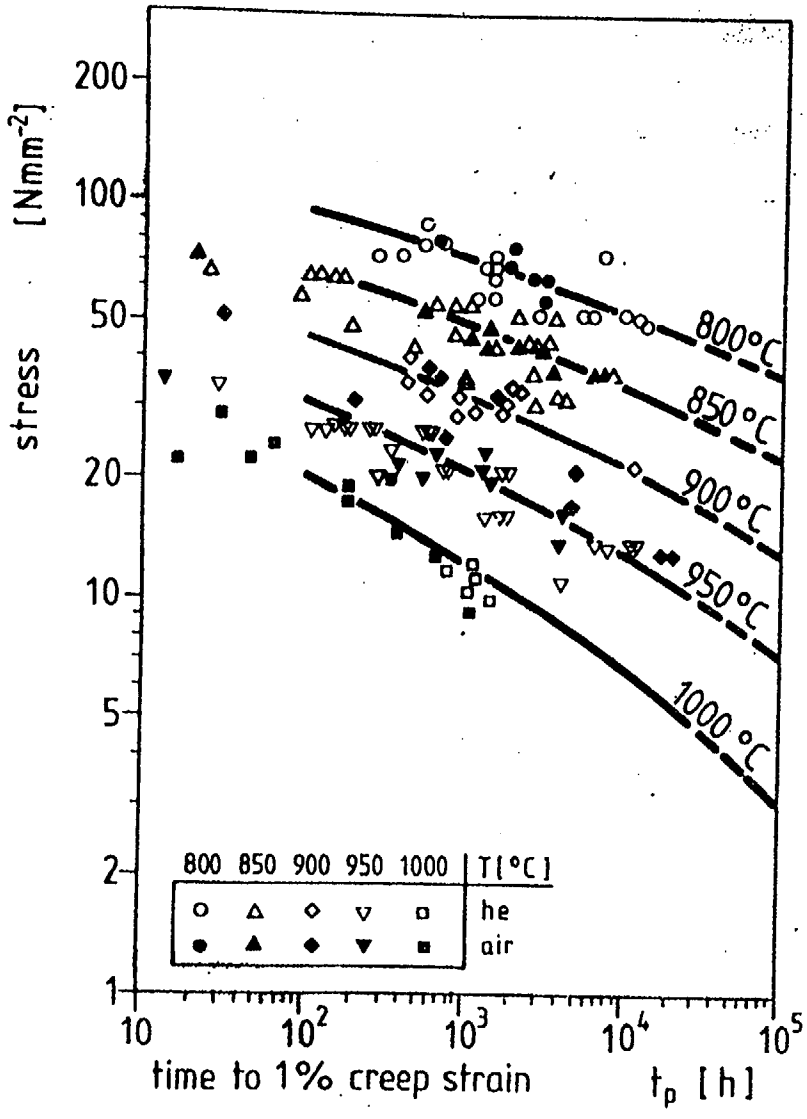

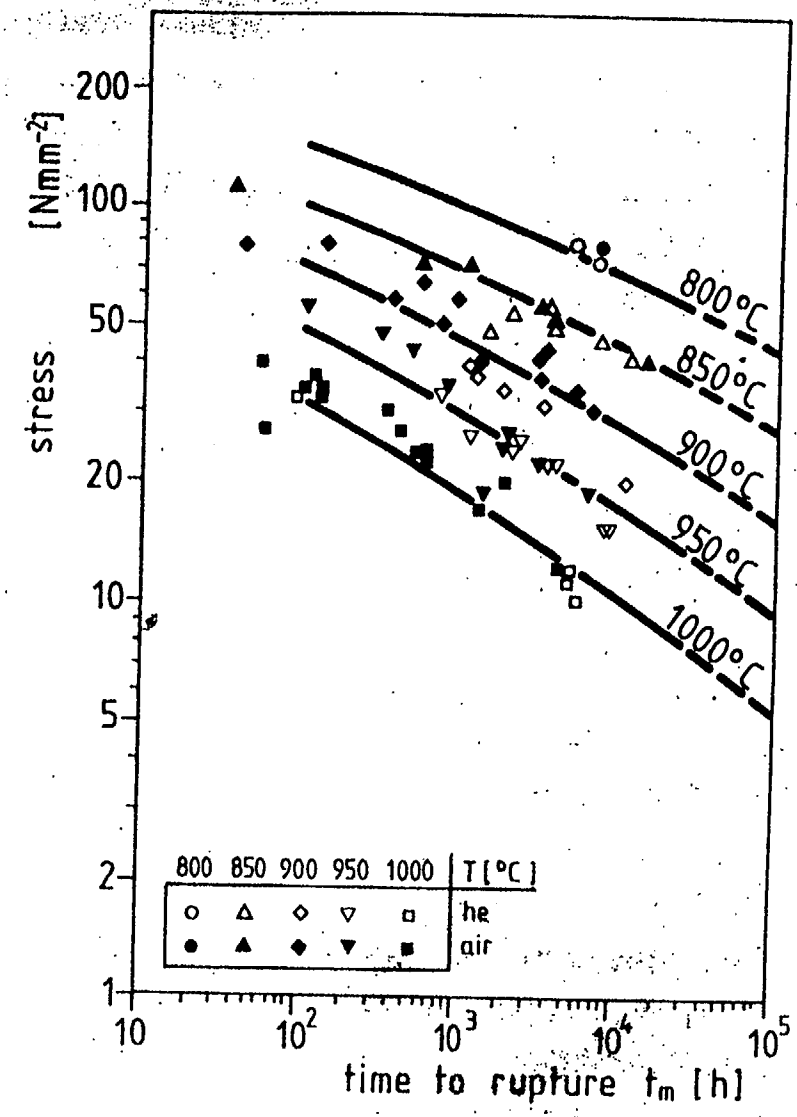

Creep properties of INCONEL 617.

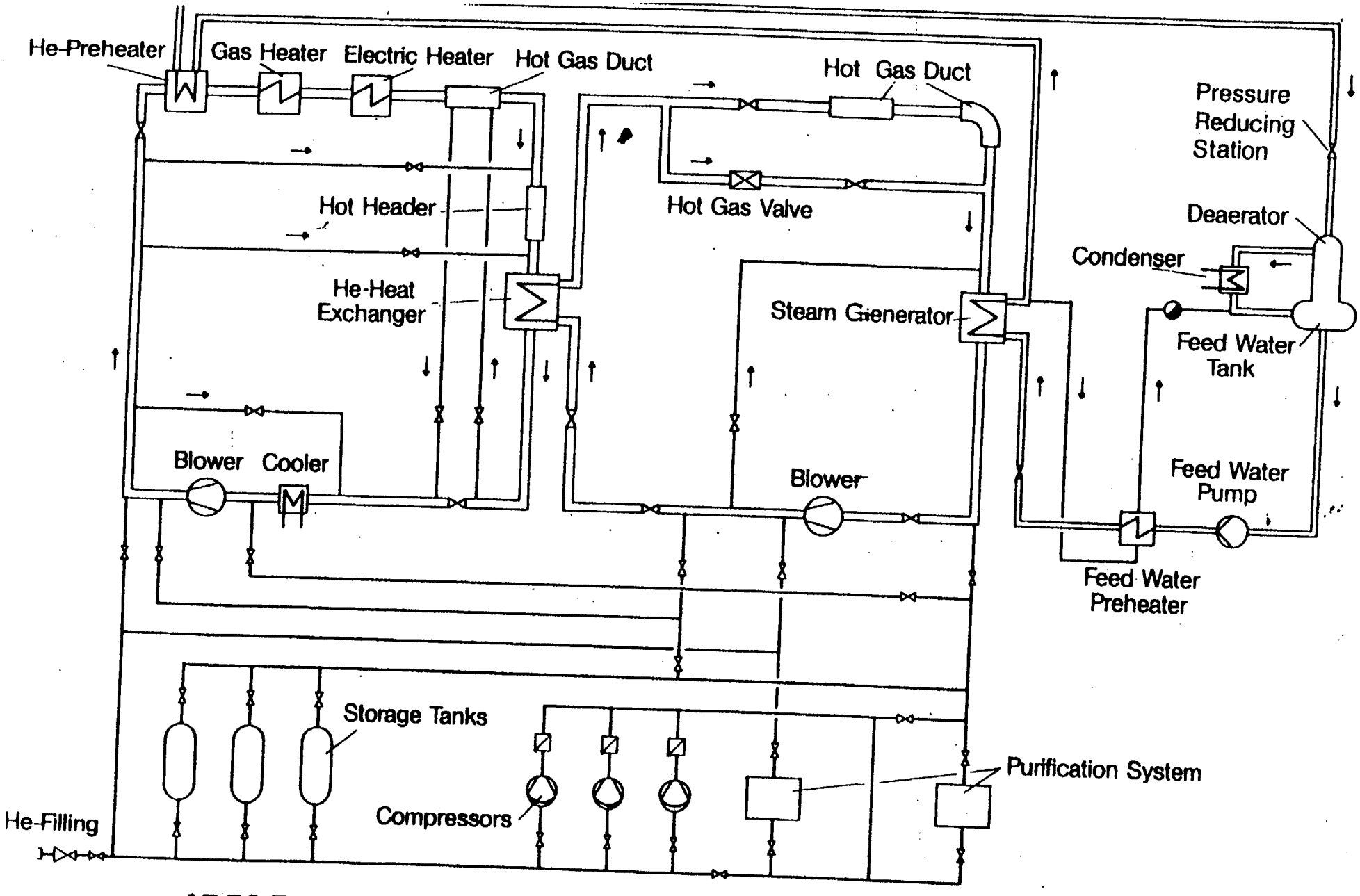

KVK Double Loop Operation With He-Heat Exchanger

$P \sim 10\,MW$, $T_{He} = 950°C$

Fig. 2

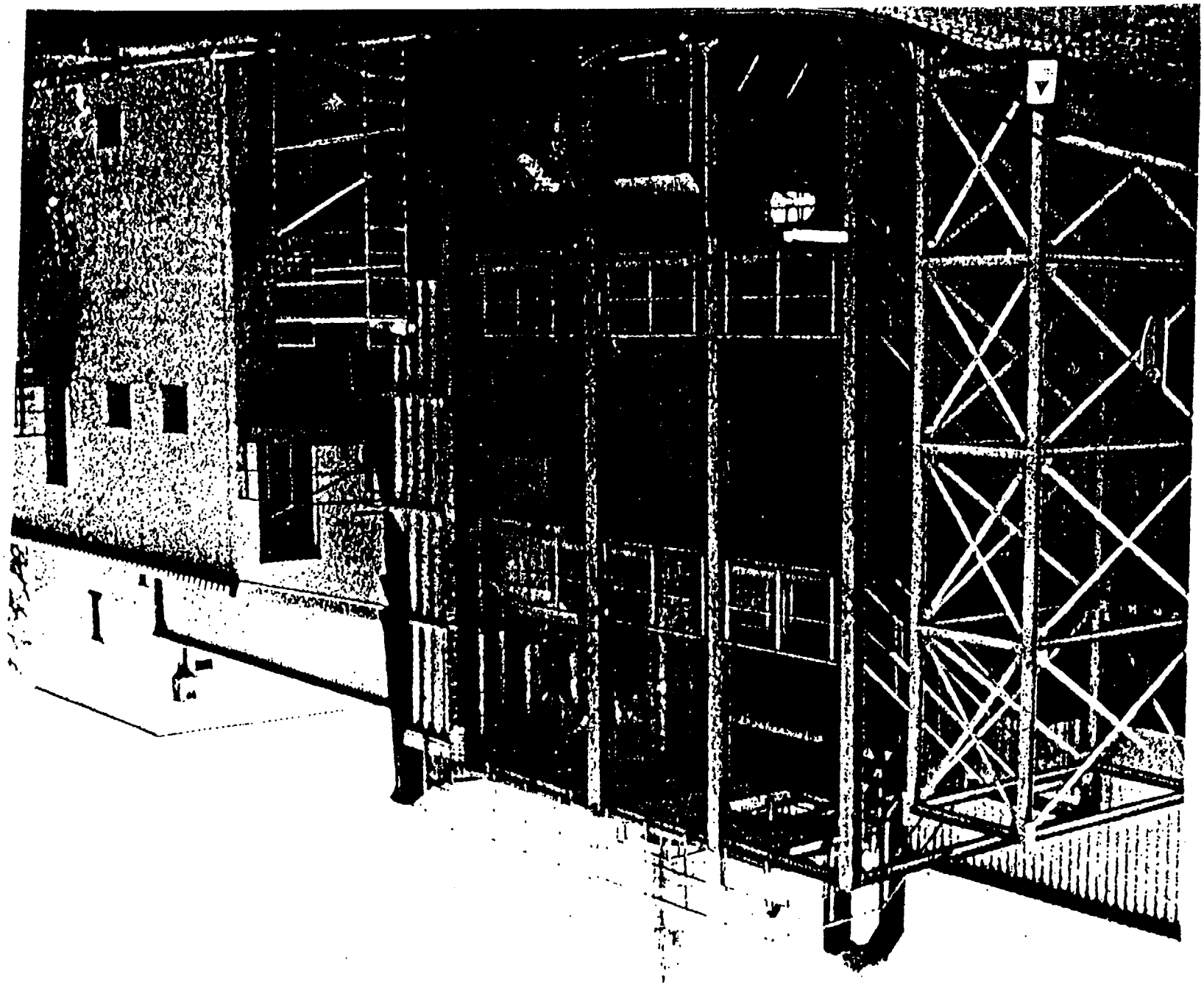

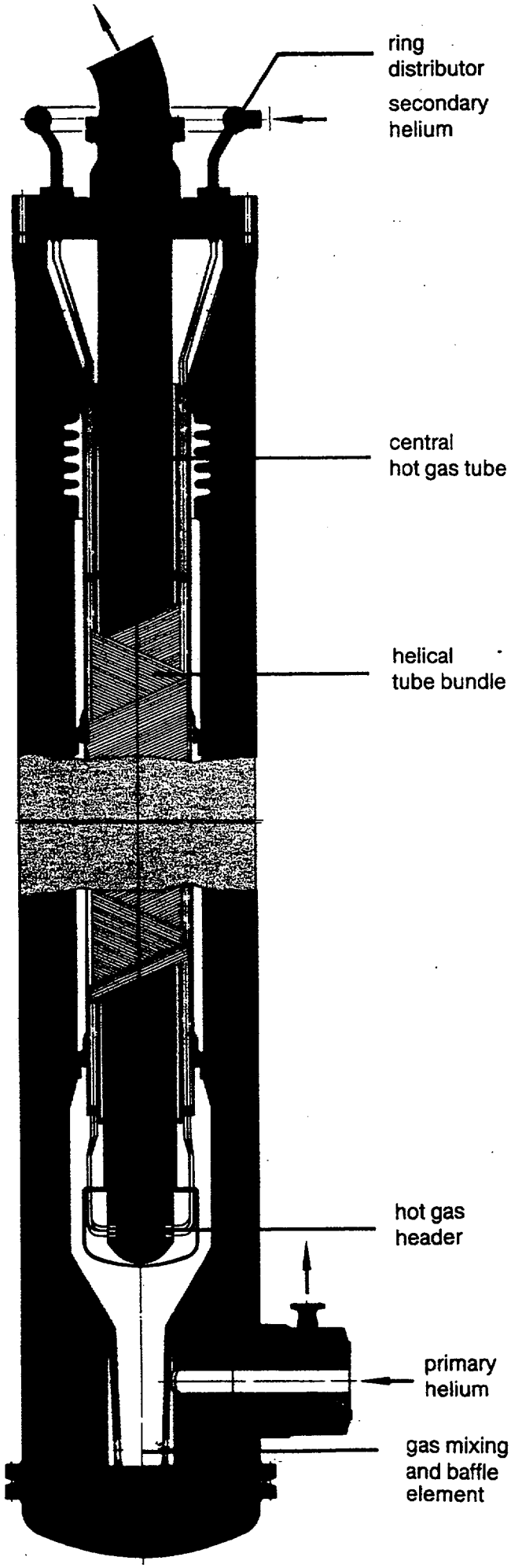
ring
distributor
secondary
helium
central
hot gas tube
helical
tube bundle
hot gas
header
primary
helium
gas mixing
and baffle
element

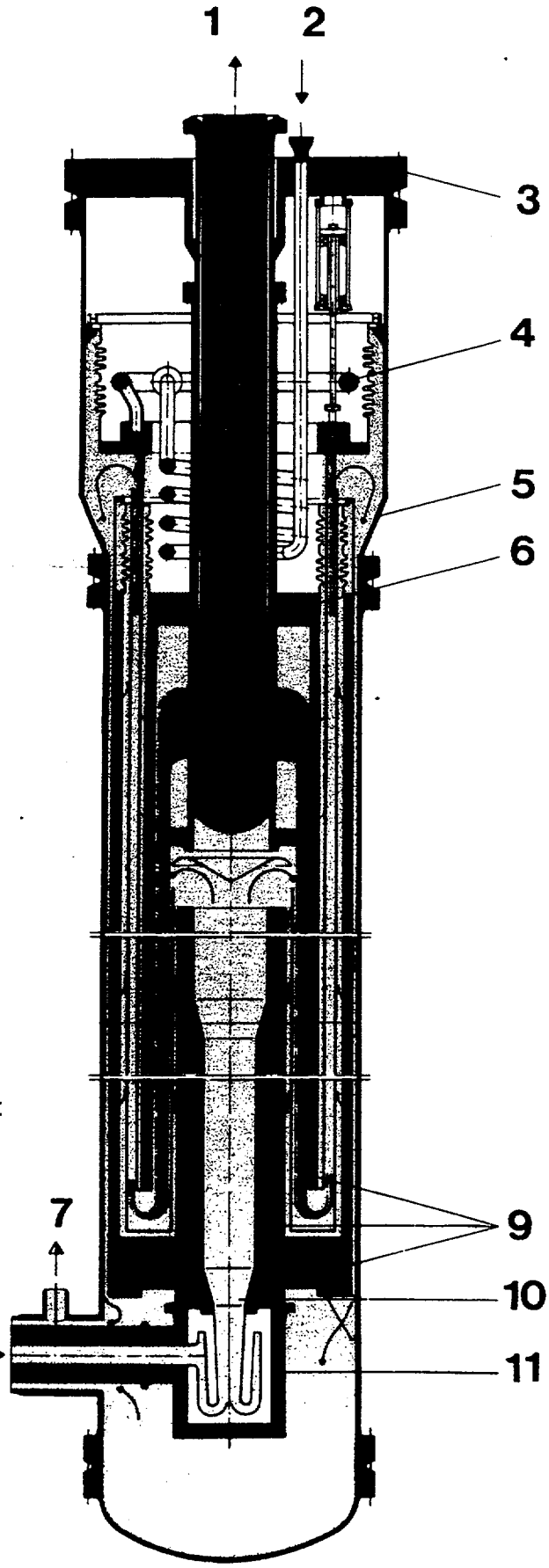

1. Outlet secondary helium
2. Inlet secondary helium
3. Mounting plate
4. Cold gas header
5. Pressure shell
6. Hot gas header
7. Outlet primary helium
8. Inlet primary helium
9. Insulation
10. Hot gas riser
11. Mixing equipment

Conclusions

- more than 3 x 10^9\$ have been spent in Germany in the last 40 years to develop the HTR technology
- the knowledge on HTR is (still) in the head of a lot of people
- in our mind it will be an advantage to use this know how as much as possible for the PBMR