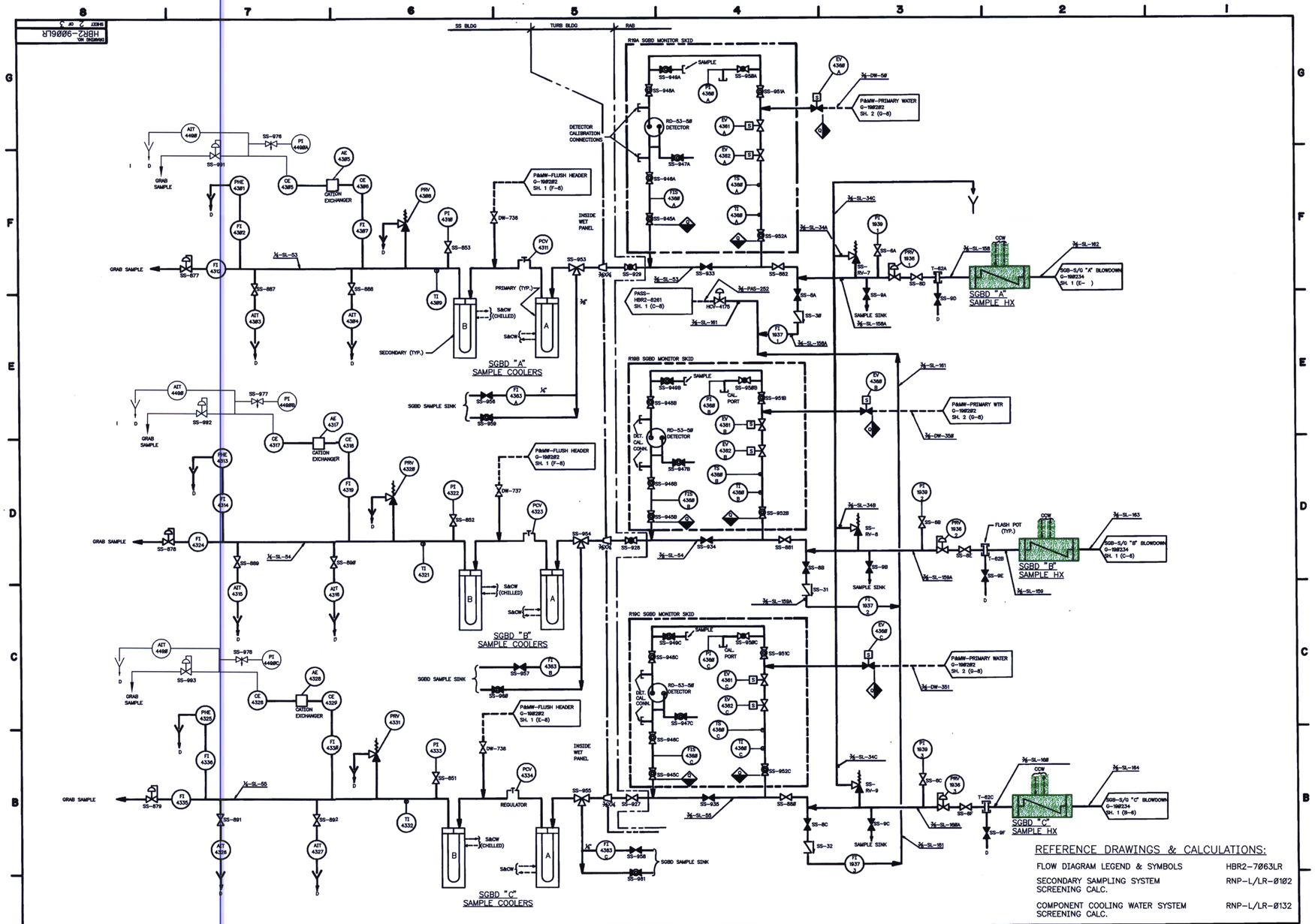

REFERENCE DRAWINGS & CALCULATIONS:

FLOW DIAGRAM LEGEND & SYMBOLS	HBR2-7063LR
SECONDARY SAMPLING SYSTEM SCREENING CALC.	RNP-L/LR-0102
COMPONENT COOLING WATER SYSTEM SCREENING CALC.	RNP-L/LR-0132

CALC. RNP-L/LR-0121
ATTACHMENT 28
REV. 1
PAGE 1 OF 1

INITIAL ISSUE AS REVISION 11.

CAROLINA POWER & LIGHT CO.
H. B. ROBINSON S.E. PLANT
UNIT - NO. 2 HARTSVILLE, S.C.

TITLE: SECONDARY SAMPLING SYSTEM FLOW DIAGRAM

VENDOR NO. | SIZE E | DRAWING NO. HBR2-9006LR

SCALE | SHEET 2 OF 3