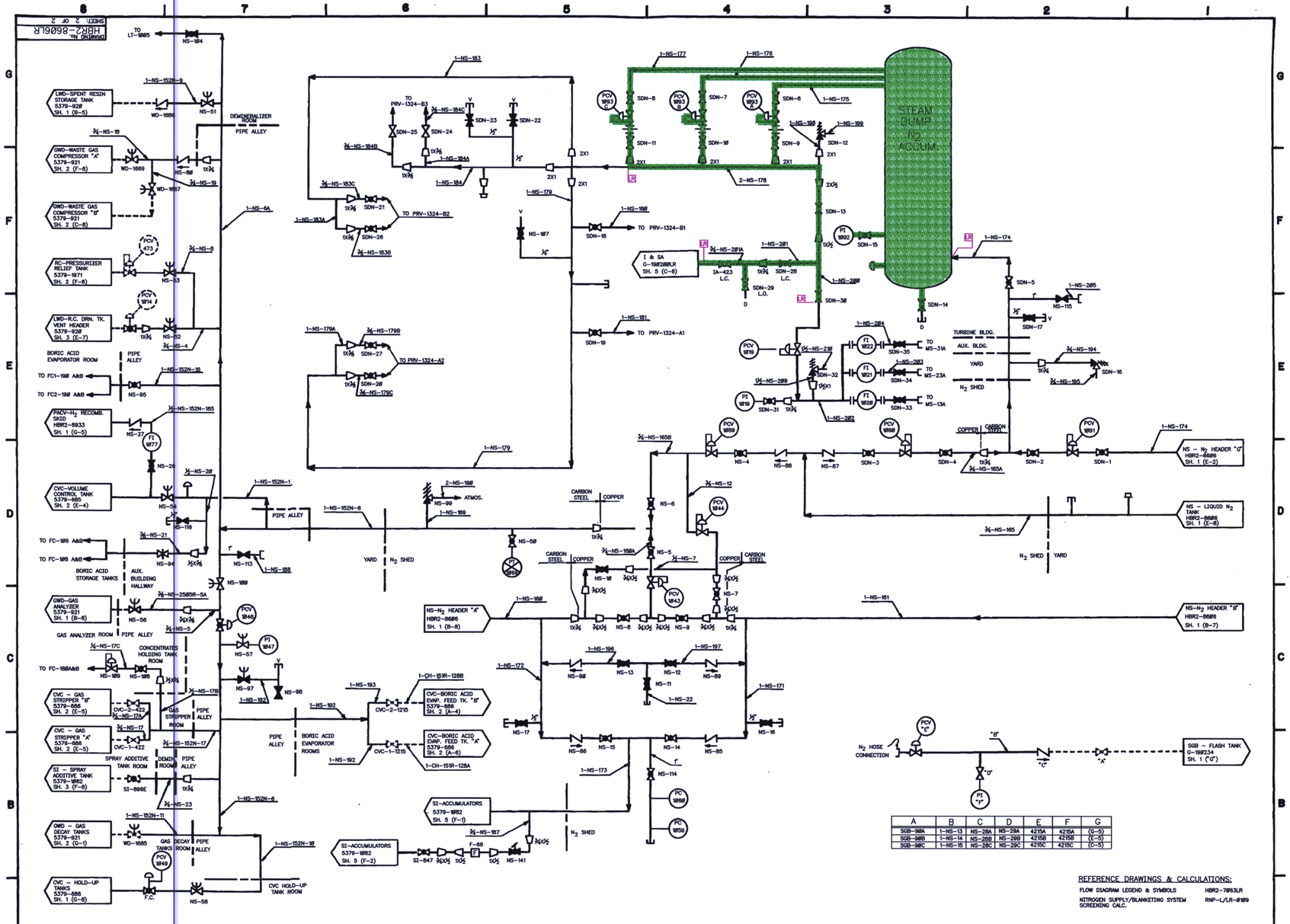

A	B	C	D	E	F	G
SGB-90A	1-NS-13	NS-28A	NS-29A	4215A	4215A	(G-5)
SGB-90B	1-NS-14	NS-28B	NS-29B	4215B	4215B	(E-5)
SGB-90C	1-NS-15	NS-28C	NS-29C	4215C	4215C	(C-5)

REFERENCE DRAWINGS & CALCULATIONS:

FLOW DIAGRAM LEGEND & SYMBOLS — HBR2-7063LR

NITROGEN SUPPLY/BLANKETING SYSTEM SCREENING CALC. — RNP-L/LR-0109

CALC. RNP-L/LR-0121
ATTACHMENT 26
REV. 1
PAGE 1 OF 1

INITIAL ISSUE AS REVISION 15.

CAROLINA POWER & LIGHT CO.
H.B. ROBINSON S.E. PLANT
UNIT - No.2 HARTSVILLE, S.C.

TITLE: NITROGEN SUPPLY SYSTEM FLOW DIAGRAM

VENDOR No. | SIZE E | DRAWING No. HBR2-8606LR

SCALE: NONE | SHEET: 2 OF 2

D-59