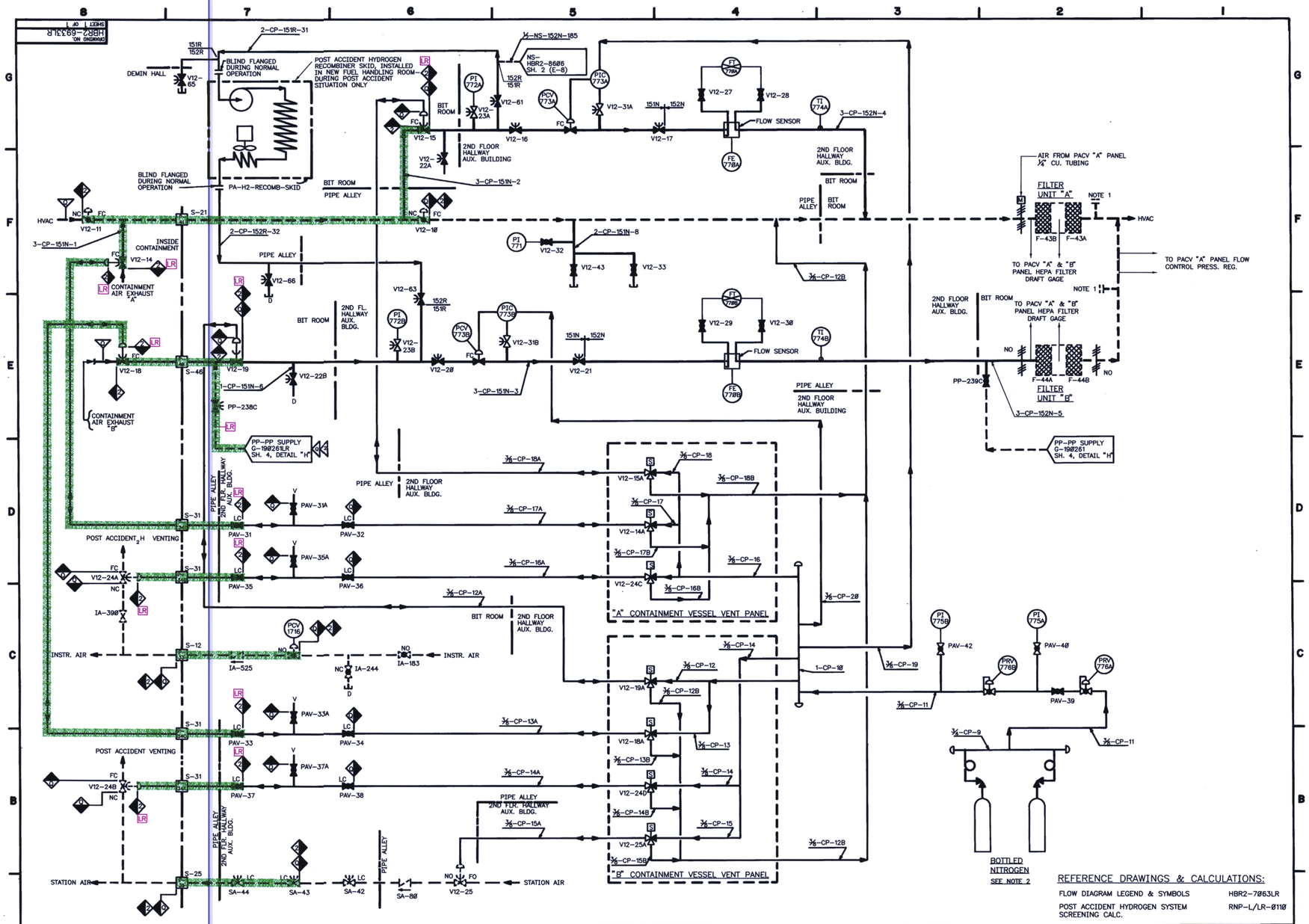

REFERENCE DRAWINGS & CALCULATIONS:

FLOW DIAGRAM LEGEND & SYMBOLS	HBR2-7063LR
POST ACCIDENT HYDROGEN SYSTEM SCREENING CALC.	RNP-L/LR-0110

CALC. RNP-L/LR-0121
ATTACHMENT 24
REV. 1
PAGE 1 OF 1

INITIAL ISSUE AS REVISION 19.

CAROLINA POWER & LIGHT CO.
H.B. ROBINSON S.E. PLANT
UNIT - NO. 2 HARTSVILLE, SC

POST ACCIDENT CONTAINMENT VENTING AND H_2 RECOMBINER SYSTEM FLOW DIAGRAM

VENDOR NO. | SIZE E | DRAWING NO. HBR2-6933LR
SCALE NONE | SHEET 1 OF 1

D-57