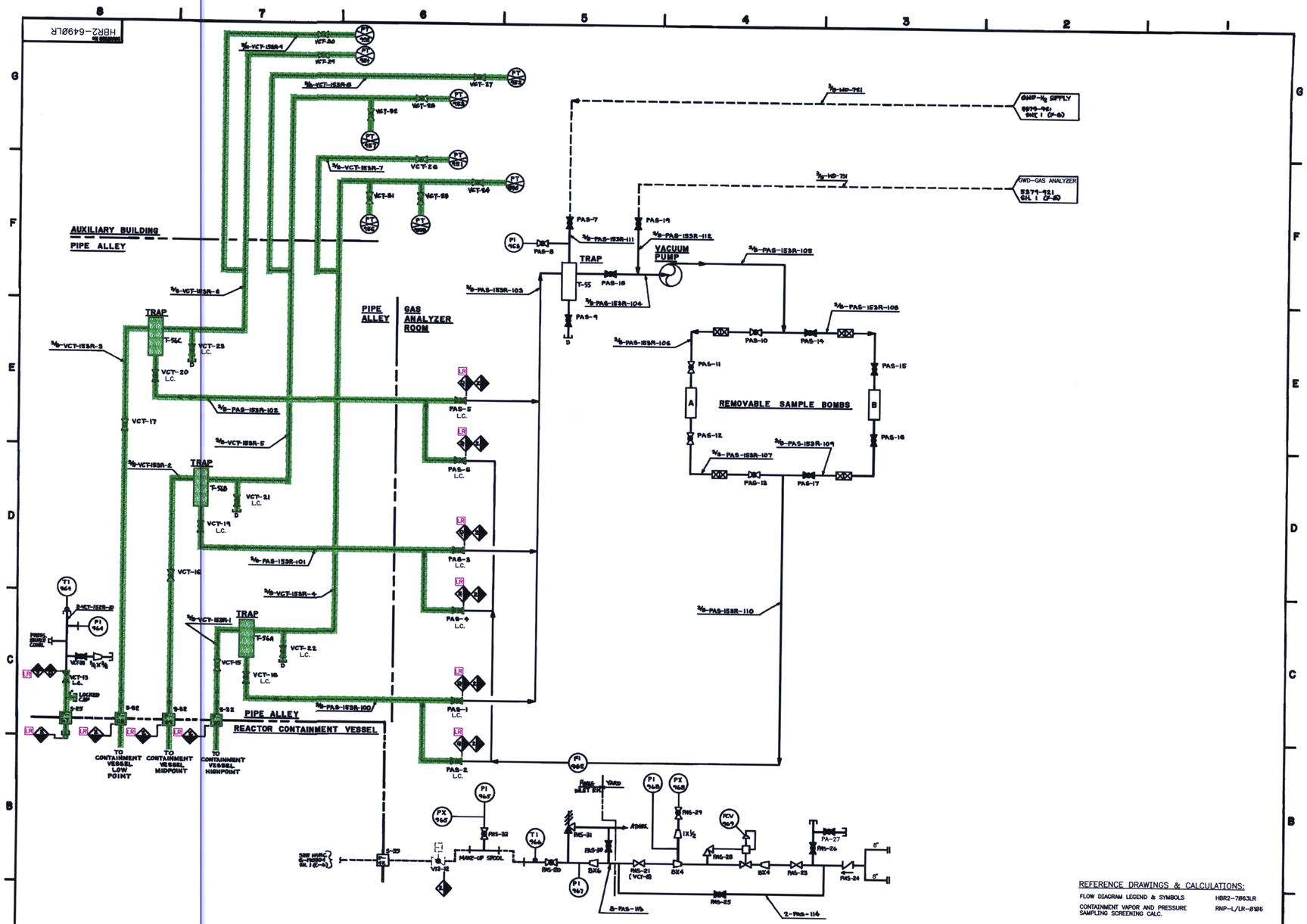

REFERENCE DRAWINGS & CALCULATIONS:

FLOW DIAGRAM LEGEND & SYMBOLS	HBR2-7863LR
CONTAINMENT VAPOR AND PRESSURE SAMPLING SCREENING CALC.	RNP-L/LR-0106

CALC. RNP-L/LR-0121
ATTACHMENT 23
REV. 2
PAGE 1 OF 1

INITIAL ISSUE AS REVISION 13.

CAROLINA POWER & LIGHT CO
H. B. ROBINSON S.E. PLANT
UNIT - NO. 2 HARTSVILLE, S.C.

CONTAINMENT VAPOR AND PRESSURE SAMPLING SYSTEM FLOW DIAGRAM

VENDOR No | SIZE E | DRAWING No HBR2-6490LR
SCALE NONE | SHEET 1 OF 1

...\DOCSOPEN\WENDY_PE\239_01_.DGN 06/07/02 02:12:01 PM

D-56