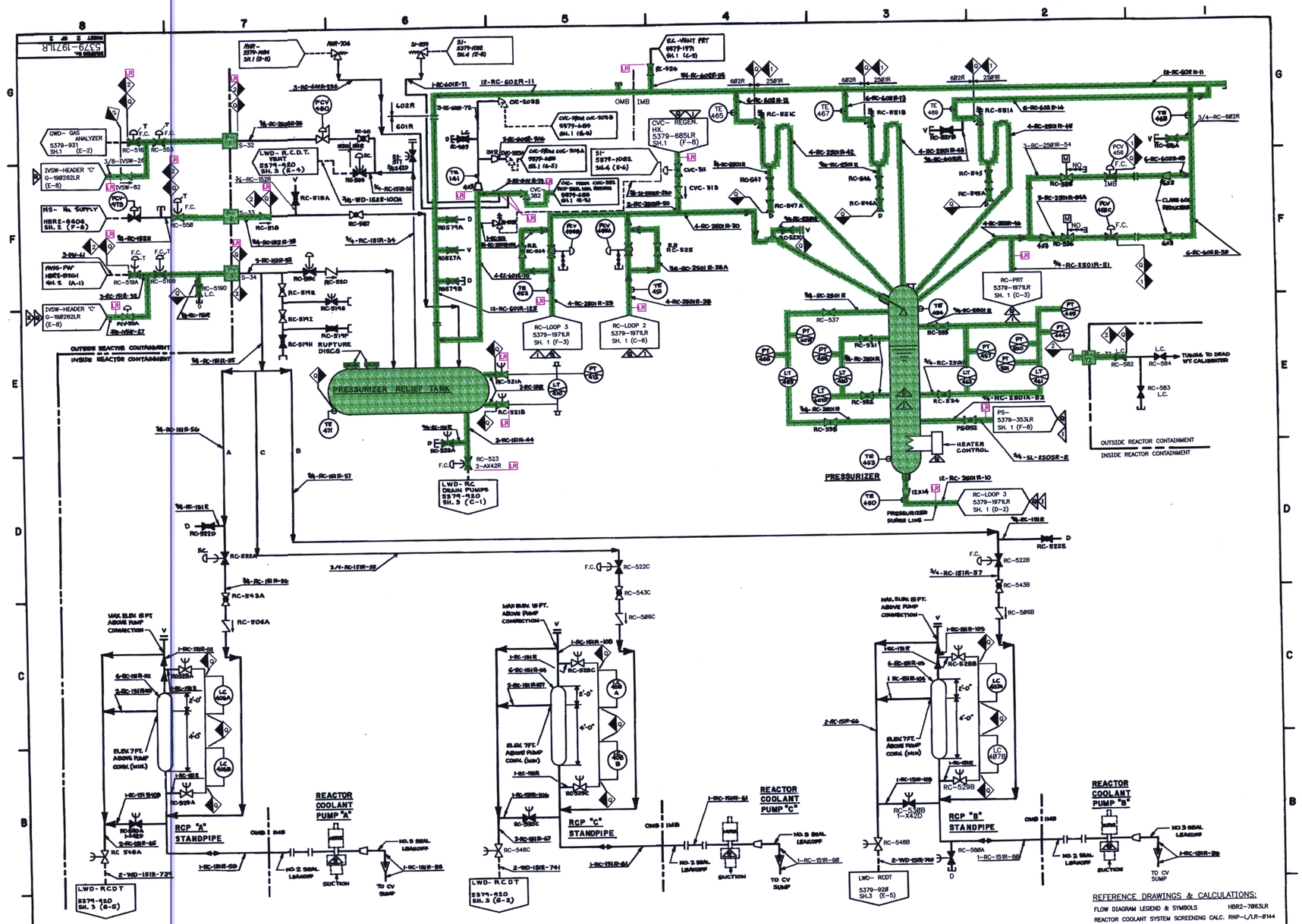
PRESSURIZER RELIEF TANK
PRESSURIZER
REACTOR COOLANT PUMP "A"
REACTOR COOLANT PUMP "C"
REACTOR COOLANT PUMP "B"
RCP "A" STANDPIPE
RCP "C" STANDPIPE
RCP "B" STANDPIPE
OUTSIDE REACTOR CONTAINMENT
INSIDE REACTOR CONTAINMENT
TUBING TO DEAD WT CALIBRATOR
HEATER CONTROL
PRESSURIZER SURGE LINE
RUPTURE DISCS
LWD-RC DRAIN PUMPS 5379-920 SH. 3 (C-1)
LWD-RCDT 5379-920 SH. 3 (G-5)
LWD-RCDT 5379-920 SH. 3 (G-2)
LWD-RCDT 5379-920 SH. 3 (E-5)
TO CV SUMP
SUCTION
NO. 2 SEAL LEAKOFF
NO. 3 SEAL LEAKOFF
MAX. ELEV. 15 FT. ABOVE PUMP CONNECTION
ELEV. 7 FT. ABOVE PUMP CONN. (MIN)
REFERENCE DRAWINGS & CALCULATIONS:
FLOW DIAGRAM LEGEND & SYMBOLS HBR2-7063LR
REACTOR COOLANT SYSTEM SCREENING CALC. RNP-L/LR-0144
INITIAL ISSUE AS REVISION 49.
CAROLINA POWER & LIGHT CO.
H. B. ROBINSON S.E. PLANT
UNIT - NO. 2 HARTSVILLE, S.C.
REACTOR COOLANT SYSTEM-FLOW DIAGRAM
E 5379-1971LR
CALC. RNP-L/LR-0121
ATTACHMENT 22
REV. 1
PAGE 2 OF 2

D-55