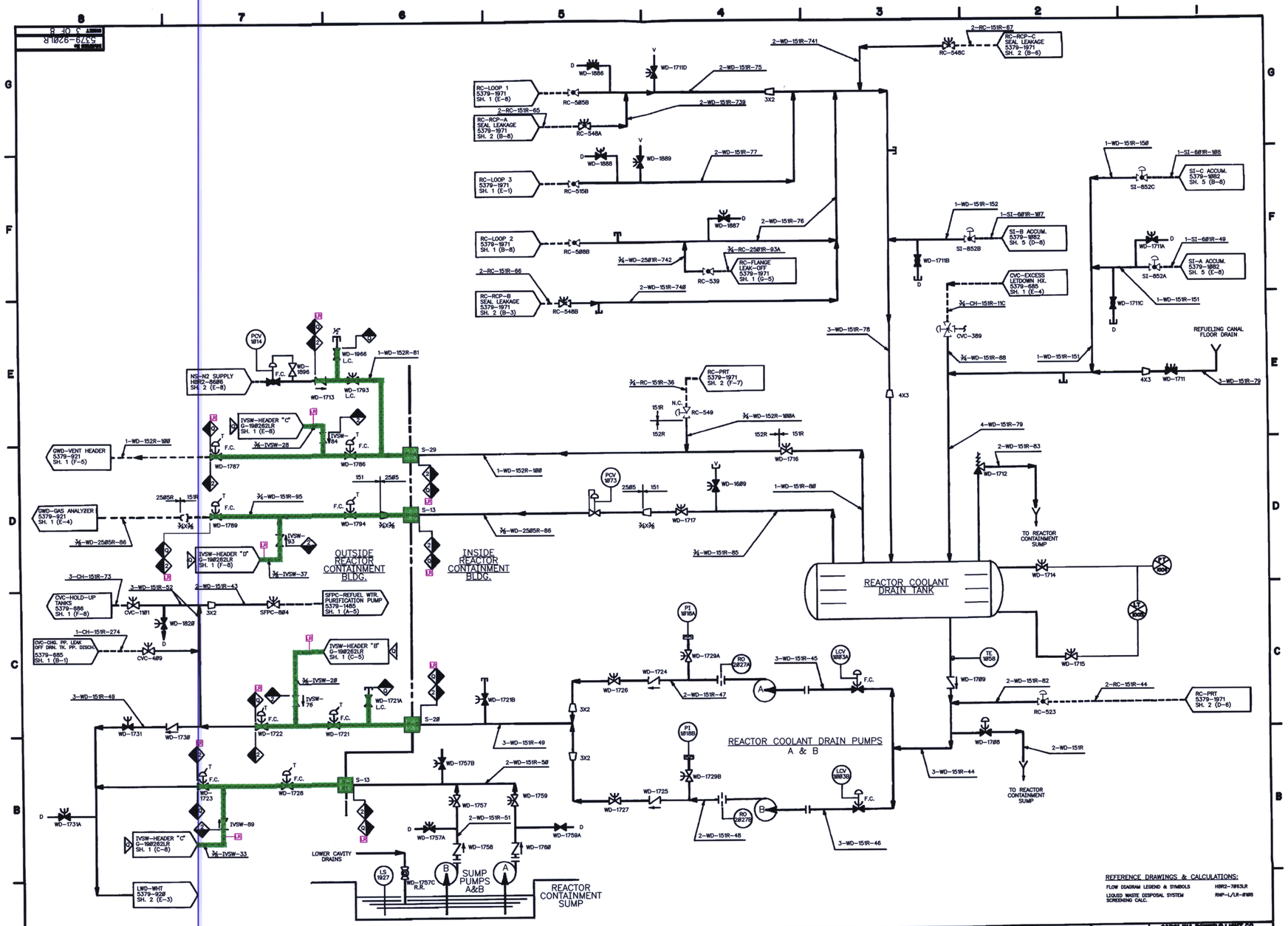
REACTOR COOLANT DRAIN TANK
REACTOR COOLANT DRAIN PUMPS A & B
OUTSIDE REACTOR CONTAINMENT BLDG.
INSIDE REACTOR CONTAINMENT BLDG.
REACTOR CONTAINMENT SUMP
SUMP PUMPS A&B
REFUELING CANAL FLOOR DRAIN
TO REACTOR CONTAINMENT SUMP
RC-LOOP 1 5379-1971 SH. 1 (E-8)
RC-RCP-A SEAL LEAKAGE 5379-1971 SH. 2 (B-8)
RC-LOOP 3 5379-1971 SH. 1 (E-1)
RC-LOOP 2 5379-1971 SH. 1 (B-8)
RC-RCP-B SEAL LEAKAGE 5379-1971 SH. 2 (B-3)
RC-RCP-C SEAL LEAKAGE 5379-1971 SH. 2 (B-6)
RC-FLANGE LEAK-OFF 5379-1971 SH. 1 (G-5)
SI-C ACCUM. 5379-1882 SH. 5 (B-8)
SI-B ACCUM. 5379-1882 SH. 5 (D-8)
SI-A ACCUM. 5379-1882 SH. 5 (E-8)
CVC-EXCESS LETDOWN HX. 5379-685 SH. 1 (E-4)
RC-PRT 5379-1971 SH. 2 (F-7)
RC-PRT 5379-1971 SH. 2 (D-6)
N2-N2 SUPPLY HBR2-8586 SH. 2 (E-8)
IVSW-HEADER "C" G-198262LR SH. 1 (E-8)
IVSW-HEADER "D" G-198262LR SH. 1 (F-8)
IVSW-HEADER "B" G-198262LR SH. 1 (C-5)
IVSW-HEADER "C" G-198262LR SH. 1 (C-8)
GWD-VENT HEADER 5379-921 SH. 1 (F-5)
GWD-GAS ANALYZER 5379-921 SH. 1 (E-4)
CVC-HOLD-UP TANKS 5379-686 SH. 1 (F-8)
CVC-CHG. PP. LEAK OFF DRN. TK. PP. DISCH. 5379-685 SH. 1 (B-1)
SFPC-REFUEL WTR. PURIFICATION PUMP 5379-1485 SH. 1 (A-5)
LWD-WHT 5379-920 SH. 2 (E-3)
LOWER CAVITY DRAINS
REFERENCE DRAWINGS & CALCULATIONS:
FLOW DIAGRAM LEGEND & SYMBOLS HBR2-7863LR
LIQUID WASTE DISPOSAL SYSTEM SCREENING CALC. RNP-L/LR-0188
CALC. RNP-L/LR-0121
ATTACHMENT 18
REV. 0
PAGE 1 OF 1
INITIAL ISSUE AS REVISION 43.
CAROLINA POWER & LIGHT CO
TITLE LIQUID WASTE DISPOSAL SYSTEM FLOW DIAGRAM
5379-920LR
SCALE NONE
SHEET 3 OF 8

D-46