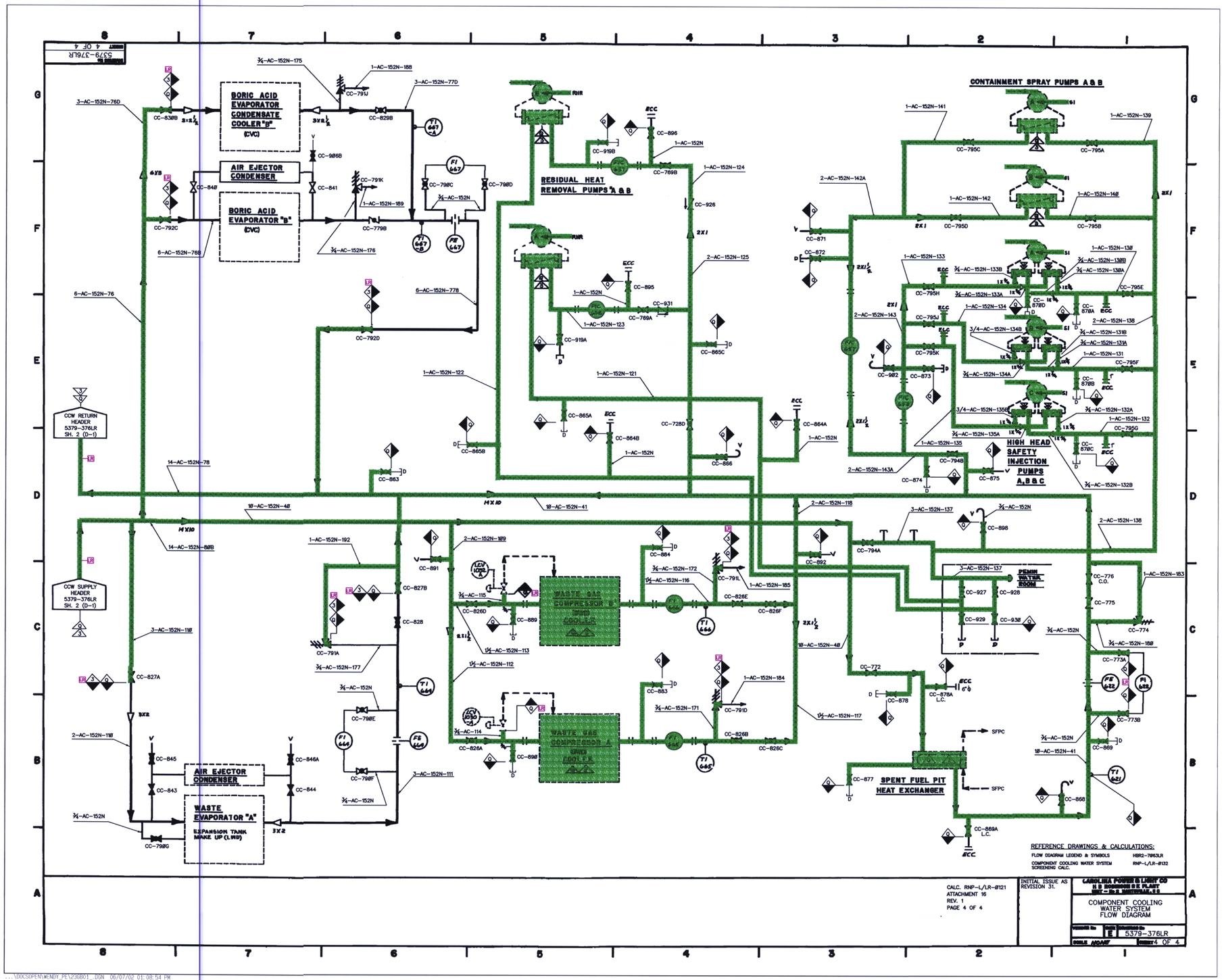
BORIC ACID EVAPORATOR CONDENSATE COOLER "B" (CVC)
AIR EJECTOR CONDENSER
BORIC ACID EVAPORATOR "B" (CVC)
RESIDUAL HEAT REMOVAL PUMPS "A" & B
CONTAINMENT SPRAY PUMPS A & B
HIGH HEAD SAFETY INJECTION PUMPS A,B & C
CCW RETURN HEADER 5379-376LR SH. 2 (D-1)
CCW SUPPLY HEADER 5379-376LR SH. 2 (D-1)
WASTE GAS COMPRESSOR B AND COOLER
WASTE GAS COMPRESSOR A AND COOLER
AIR EJECTOR CONDENSER
WASTE EVAPORATOR "A"
EXPANSION TANK MAKE UP (LWD)
PENIN WATER ROOM
SPENT FUEL PIT HEAT EXCHANGER
SFPC
REFERENCE DRAWINGS & CALCULATIONS:
FLOW DIAGRAM LEGEND & SYMBOLS HBR2-7063LR
COMPONENT COOLING WATER SYSTEM SCREENING CALC. RNP-L/LR-0132
CALC. RNP-L/LR-0121 ATTACHMENT 16 REV. 1 PAGE 4 OF 4
INITIAL ISSUE AS REVISION 31.
CAROLINA POWER & LIGHT CO
COMPONENT COOLING WATER SYSTEM FLOW DIAGRAM
E 5379-376LR
SHEET 4 OF 4

D-43