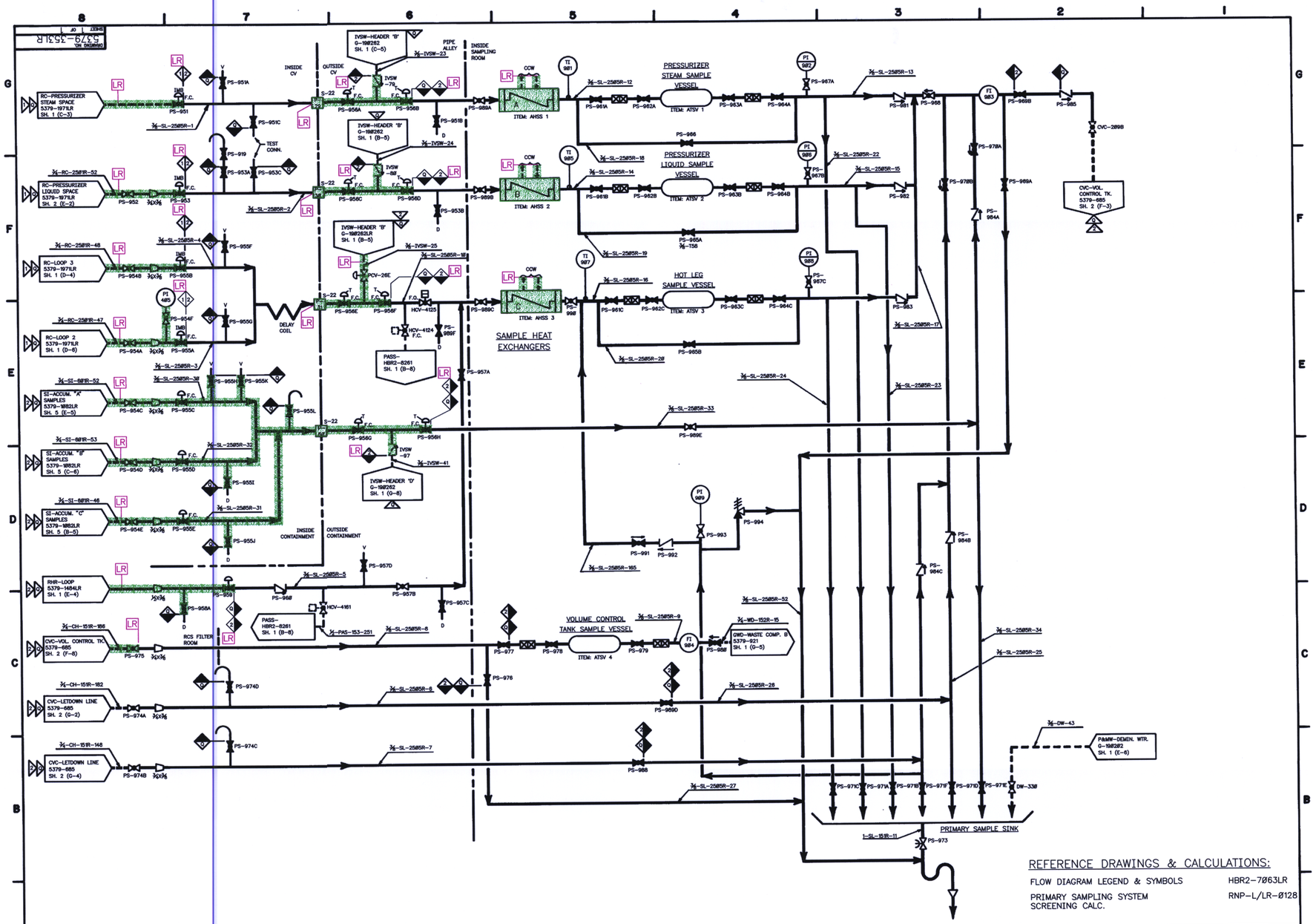

...\DOCSOPEN\WENDY_PE\IPB401_.DGN 06/07/02 12:51:03 PM

D-39