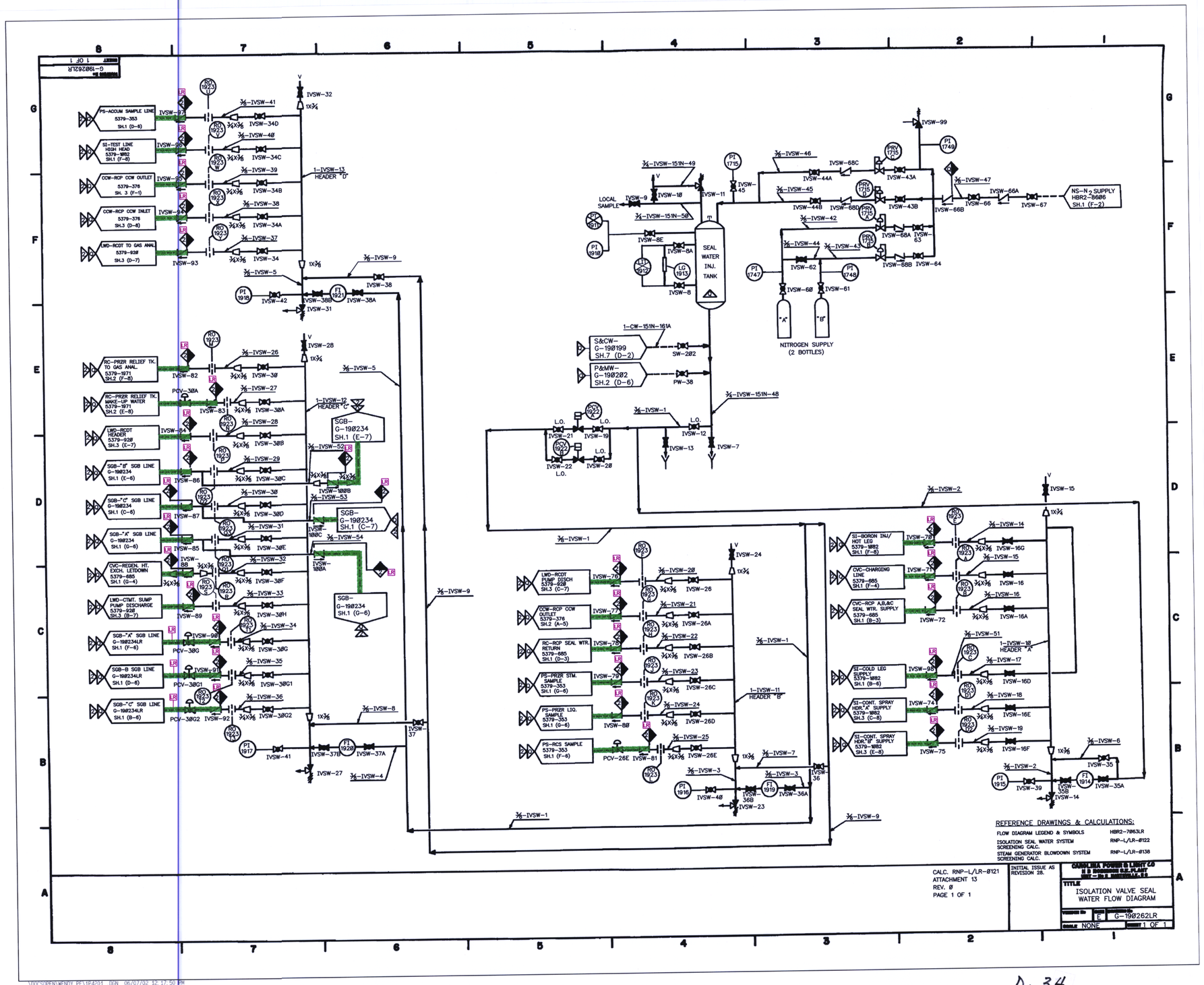
SEAL WATER INJ. TANK
NITROGEN SUPPLY (2 BOTTLES)
NS-N2 SUPPLY HBR2-8606 SH.1 (F-2)
S&CW-G-190199 SH.7 (D-2)
P&MW-G-190202 SH.2 (D-6)
1-IVSW-13 HEADER "D"
1-IVSW-12 HEADER "C"
1-IVSW-10 HEADER "A"
1-IVSW-11 HEADER "B"
SGB-G-190234 SH.1 (E-7)
SGB-G-190234 SH.1 (C-7)
SGB-G-190234 SH.1 (G-6)
PS-ACCUM SAMPLE LINE 5379-353 SH.1 (D-8)
SI-TEST LINE HIGH HEAD 5379-1882 SH.1 (F-8)
CCW-RCP CCW OUTLET 5379-376 SH. 3 (F-1)
CCW-RCP CCW INLET 5379-376 SH.3 (D-8)
LWD-RCDT TO GAS ANAL 5379-928 SH.3 (D-7)
RC-PRZR RELIEF TK. TO GAS ANAL. 5379-1971 SH.2 (F-8)
RC-PRZR RELIEF TK. MAKE-UP WATER 5379-1971 SH.2 (E-8)
LWD-RCDT HEADER 5379-928 SH.3 (E-7)
SGB-"B" SGB LINE G-190234 SH.1 (E-6)
SGB-"C" SGB LINE G-190234 SH.1 (C-6)
SGB-"A" SGB LINE G-190234 SH.1 (G-6)
CVC-REGEN. HT. EXCH. LETDOWN 5379-685 SH.1 (G-4)
LWD-CTMT. SUMP PUMP DISCHARGE 5379-928 SH.3 (B-7)
SGB-"A" SGB LINE G-190234LR SH.1 (F-6)
SGB-B SGB LINE G-190234LR SH.1 (D-6)
SGB-"C" SGB LINE G-190234LR SH.1 (B-6)
LWD-RCDT PUMP DISCH 5379-928 SH.3 (C-7)
CCW-RCP CCW OUTLET 5379-376 SH.2 (A-5)
RC-RCP SEAL WTR. RETURN 5379-685 SH.1 (D-3)
PS-PRZR STM. SAMPLE 5379-353 SH.1 (G-8)
PS-PRZR LIQ. SAMPLE 5379-353 SH.1 (G-6)
PS-RCS SAMPLE 5379-353 SH.1 (F-8)
SI-BORON INJ/ HOT LEG 5379-1882 SH.1 (F-8)
CVC-CHARGING LINE 5379-685 SH.1 (F-4)
CVC-RCP A,B,&C SEAL WTR. SUPPLY 5379-685 SH.1 (B-3)
SI-COLD LEG SUPPLY 5379-1882 SH.1 (B-6)
SI-CONT. SPRAY HDR."A" SUPPLY 5379-1882 SH.3 (C-8)
SI-CONT. SPRAY HDR."B" SUPPLY 5379-1882 SH.3 (E-8)
LOCAL SAMPLE
REFERENCE DRAWINGS & CALCULATIONS:
FLOW DIAGRAM LEGEND & SYMBOLS HBR2-7063LR
ISOLATION SEAL WATER SYSTEM SCREENING CALC. RNP-L/LR-0122
STEAM GENERATOR BLOWDOWN SYSTEM SCREENING CALC. RNP-L/LR-0138
CALC. RNP-L/LR-0121 ATTACHMENT 13 REV. 0 PAGE 1 OF 1
INITIAL ISSUE AS REVISION 28.
CAROLINA POWER & LIGHT CO
H.B. ROBINSON S.E. PLANT
TITLE
ISOLATION VALVE SEAL WATER FLOW DIAGRAM
E
G-190262LR
NONE
1 OF 1

D-34