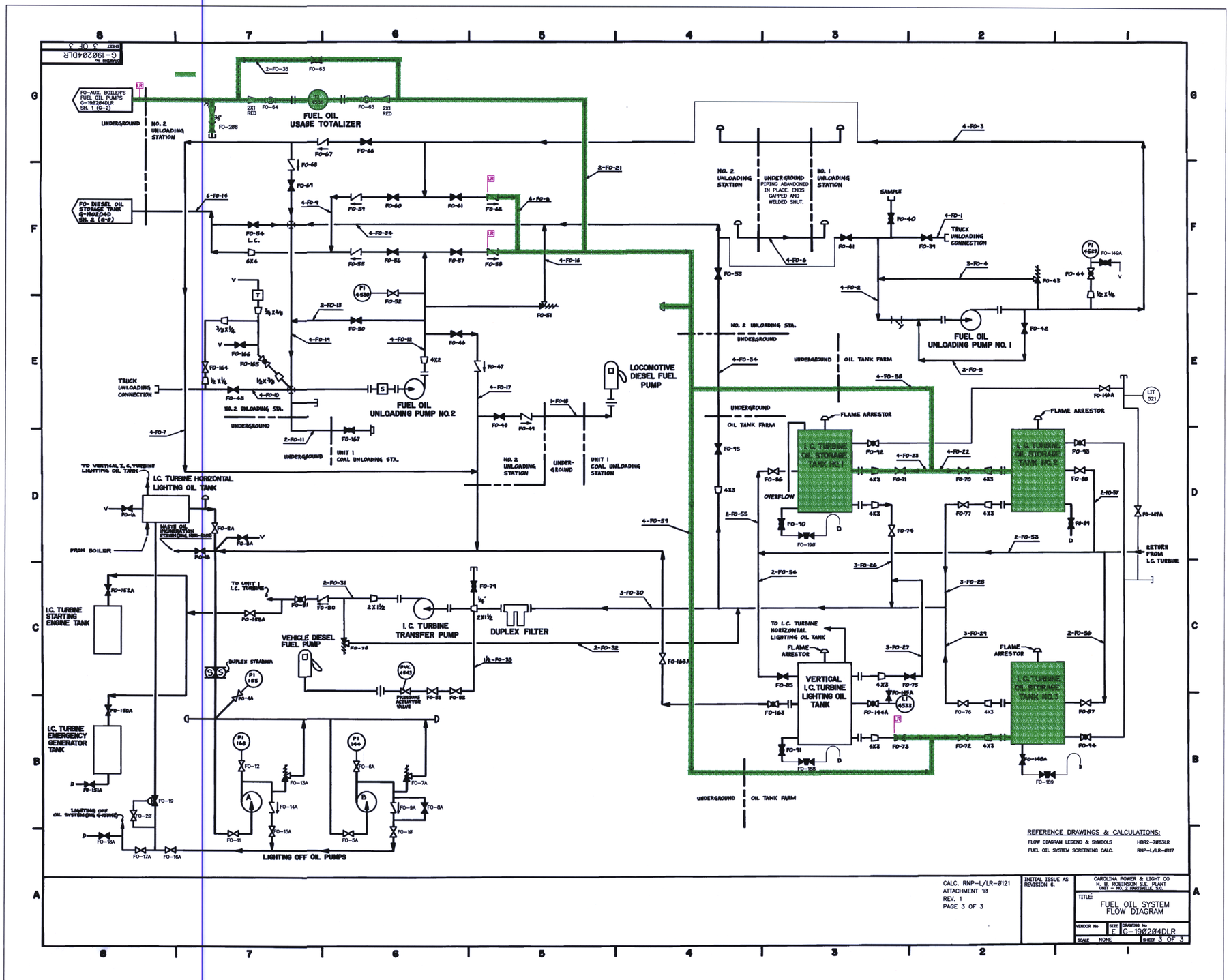

FUEL OIL USAGE TOTALIZER
FUEL OIL UNLOADING PUMP NO. 2
FUEL OIL UNLOADING PUMP NO. 1
LOCOMOTIVE DIESEL FUEL PUMP
I.C. TURBINE HORIZONTAL LIGHTING OIL TANK
I.C. TURBINE STARTING ENGINE TANK
I.C. TURBINE EMERGENCY GENERATOR TANK
I.C. TURBINE TRANSFER PUMP
DUPLEX FILTER
VEHICLE DIESEL FUEL PUMP
VERTICAL I.C. TURBINE LIGHTING OIL TANK
I.C. TURBINE OIL STORAGE TANK NO. 1
I.C. TURBINE OIL STORAGE TANK NO. 2
I.C. TURBINE OIL STORAGE TANK NO. 3
LIGHTING OFF OIL PUMPS
FLAME ARRESTOR
OVERFLOW
TRUCK UNLOADING CONNECTION
SAMPLE
UNDERGROUND
OIL TANK FARM
NO. 2 UNLOADING STATION
NO. 1 UNLOADING STATION
UNDERGROUND PIPING ABANDONED IN PLACE. ENDS CAPPED AND WELDED SHUT.
UNIT 1 COAL UNLOADING STA.
FROM BOILER
RETURN FROM I.C. TURBINE
REFERENCE DRAWINGS & CALCULATIONS:
FLOW DIAGRAM LEGEND & SYMBOLS HBR2-7063LR
FUEL OIL SYSTEM SCREENING CALC. RNP-L/LR-0117
CALC. RNP-L/LR-0121
ATTACHMENT 10
REV. 1
PAGE 3 OF 3
INITIAL ISSUE AS REVISION 6.
CAROLINA POWER & LIGHT CO
H. B. ROBINSON S.E. PLANT
UNIT - NO. 2 HARTSVILLE, S.C.
TITLE:
FUEL OIL SYSTEM FLOW DIAGRAM
VENDOR No
SIZE E
DRAWING No G-190204DLR
SCALE NONE
SHEET 3 OF 3

D-28