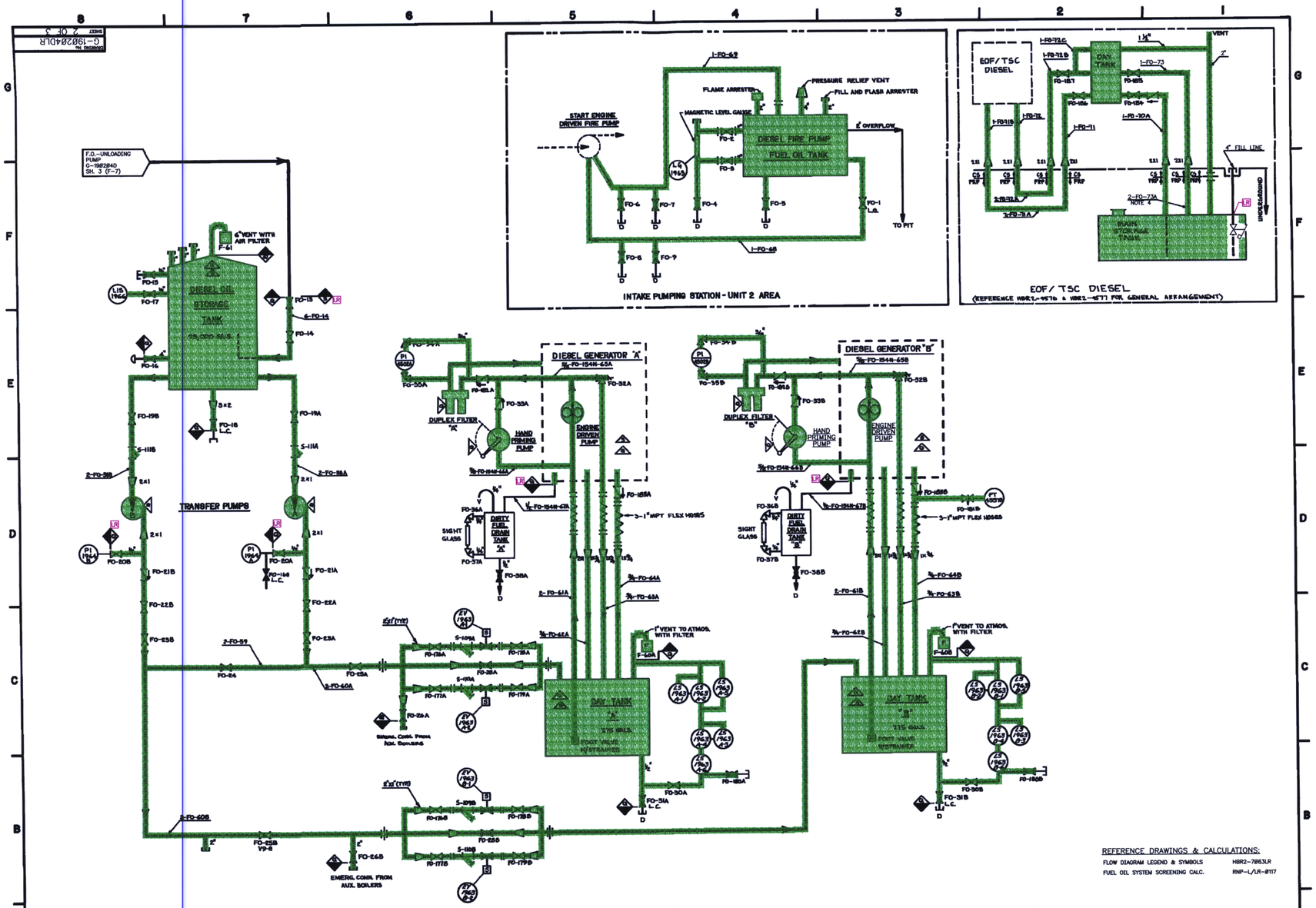
DIESEL OIL STORAGE TANK
TRANSFER PUMPS
DIESEL GENERATOR "A"
DIESEL GENERATOR "B"
DUPLEX FILTER "A"
DUPLEX FILTER "B"
HAND PRIMING PUMP
ENGINE DRIVEN PUMP
DIRTY FUEL DRAIN TANK "A"
DIRTY FUEL DRAIN TANK "B"
SIGHT GLASS
DAY TANK "A"
DAY TANK "B"
EMERG. CONN. FROM AUX. BOILERS
INTAKE PUMPING STATION - UNIT 2 AREA
START ENGINE DRIVEN FIRE PUMP
DIESEL FIRE PUMP FUEL OIL TANK
FLAME ARRESTER
PRESSURE RELIEF VENT
FILL AND FLASH ARRESTER
MAGNETIC LEVEL GAUGE
TO PIT
EOF/TSC DIESEL
EOF/TSC DIESEL
(REFERENCE HBR2-4576 & HBR2-4577 FOR GENERAL ARRANGEMENT)
REFERENCE DRAWINGS & CALCULATIONS:
FLOW DIAGRAM LEGEND & SYMBOLS HBR2-7863LR
FUEL OIL SYSTEM SCREENING CALC. RNP-L/LR-0117
CALC. RNP-L/LR-0121
ATTACHMENT 10
REV. 1
PAGE 2 OF 3
INITIAL ISSUE FOR REVISION 10.
CAROLINA POWER & LIGHT CO
H. B. ROBINSON S.E. PLANT
UNIT - NO. 2 HARTSVILLE, S.C.
TITLE:
FUEL OIL SYSTEM
FLOW DIAGRAM
VENDOR No
SIZE E
DRAWING No G-190204DLR
SCALE NONE
SHEET 2 OF 3

D-27