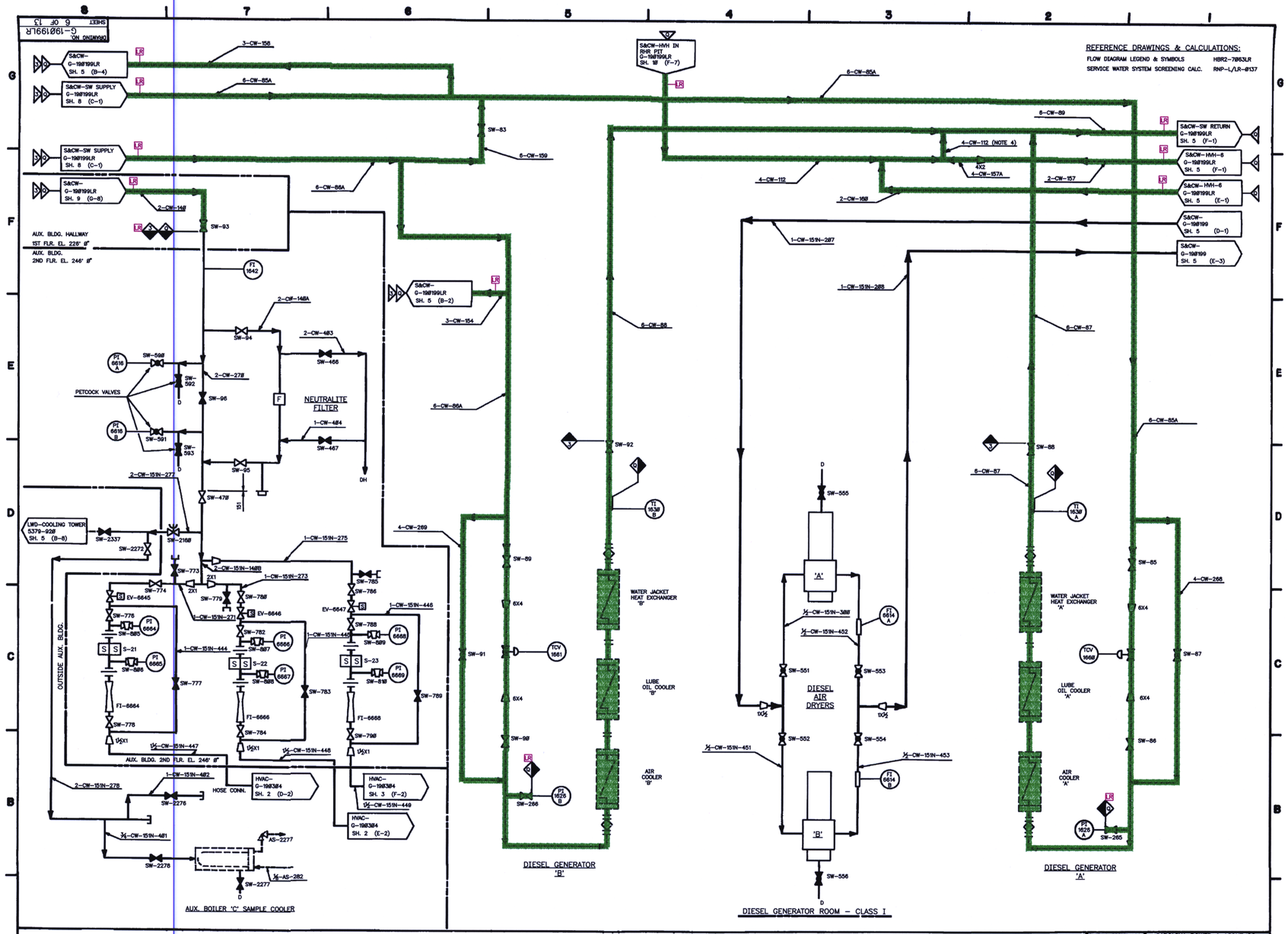
REFERENCE DRAWINGS & CALCULATIONS:
FLOW DIAGRAM LEGEND & SYMBOLS HBR2-7063LR
SERVICE WATER SYSTEM SCREENING CALC. RNP-L/LR-0137
NEUTRALITE FILTER
PETCOCK VALVES
OUTSIDE AUX. BLDG.
AUX. BLDG. HALLWAY
1ST FLR. EL. 226' 0"
AUX. BLDG.
2ND FLR. EL. 246' 0"
AUX. BLDG. 2ND FLR. EL. 246' 0"
HOSE CONN.
AUX. BOILER 'C' SAMPLE COOLER
DIESEL GENERATOR 'B'
DIESEL GENERATOR ROOM - CLASS I
DIESEL GENERATOR 'A'
WATER JACKET HEAT EXCHANGER 'B'
LUBE OIL COOLER 'B'
AIR COOLER 'B'
DIESEL AIR DRYERS
WATER JACKET HEAT EXCHANGER 'A'
LUBE OIL COOLER 'A'
AIR COOLER 'A'
S&CW-SW RETURN G-190199LR SH. 5 (F-1)
S&CW-HVH-6 G-190199LR SH. 5 (F-1)
S&CW-HVH-6 G-190199LR SH. 5 (E-1)
S&CW-G-190199 SH. 5 (D-1)
S&CW-G-190199 SH. 5 (E-3)
S&CW-G-190199LR SH. 5 (B-2)
S&CW-G-190199LR SH. 5 (B-4)
S&CW-SW SUPPLY G-190199LR SH. 8 (C-1)
S&CW-SW SUPPLY G-190199LR SH. 8 (C-1)
S&CW-G-190199LR SH. 9 (G-8)
S&CW-HVH IN RHR PIT G-190199LR SH. 10 (F-7)
LWD-COOLING TOWER 5379-920 SH. 5 (B-8)
HVAC-G-190304 SH. 2 (D-2)
HVAC-G-190304 SH. 3 (F-2)
HVAC-G-190304 SH. 2 (E-2)
CALC. RNP-L/LR-0121
ATTACHMENT 5
REV. 0
PAGE 6 OF 10
INITIAL ISSUE AS REVISION 39.
CAROLINA POWER & LIGHT CO.
H. B. ROBINSON S.E. PLANT
UNIT - NO. 2 HARTSVILLE, SC
TITLE
SERVICE & COOLING WATER SYSTEM FLOW DIAGRAM
VENDOR NO.
SIZE E
DRAWING NO. G-190199LR
SCALE NONE
SHEET 6 OF 13

D-12