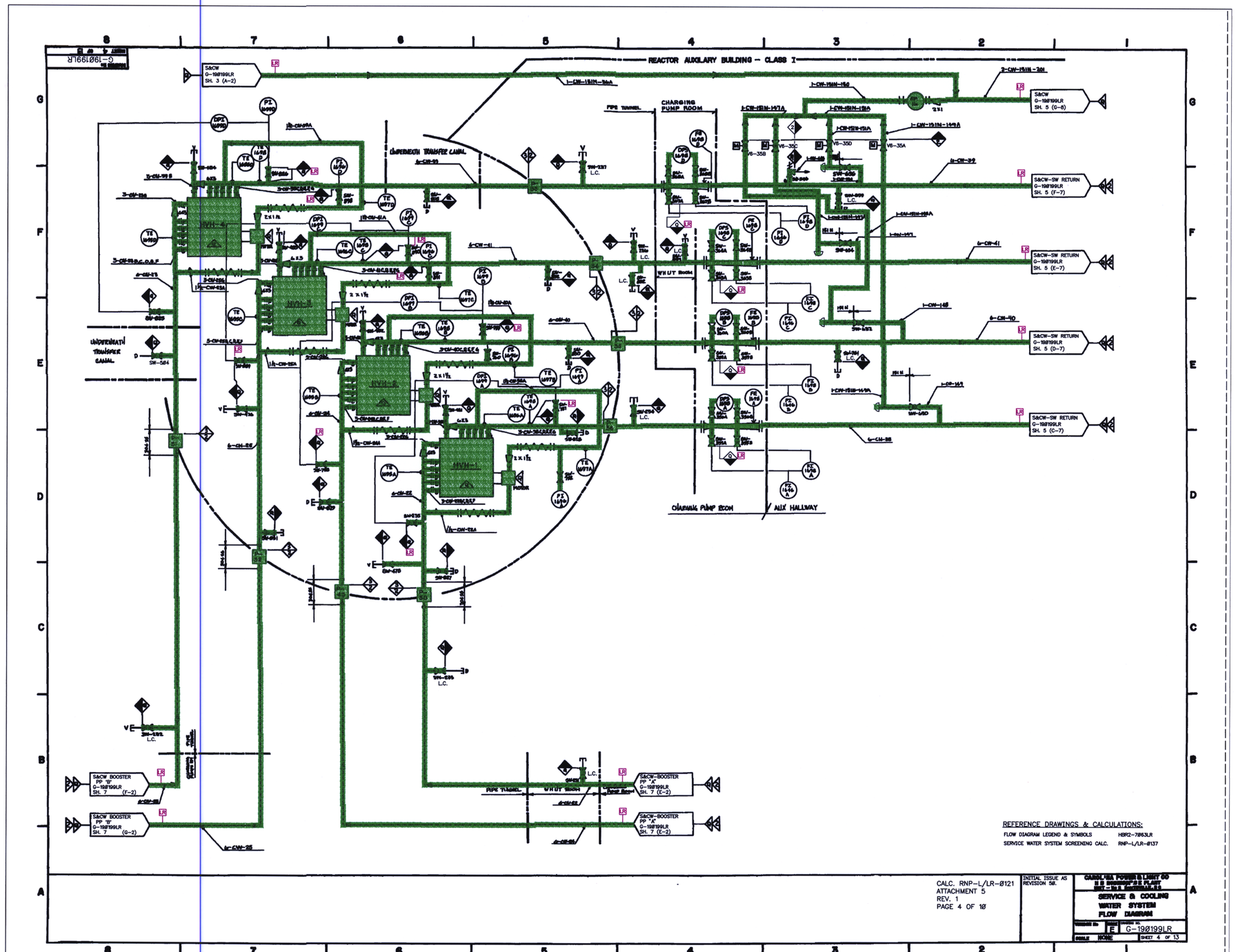
REACTOR AUXILARY BUILDING – CLASS I
UNDERNEATH TRANSFER CANAL
CHARGING PUMP ROOM
AUX HALLWAY
S&CW G-190199LR SH. 3 (A-2)
S&CW G-190199LR SH. 5 (G-8)
S&CW-SW RETURN G-190199LR SH. 5 (F-7)
S&CW-SW RETURN G-190199LR SH. 5 (E-7)
S&CW-SW RETURN G-190199LR SH. 5 (D-7)
S&CW-SW RETURN G-190199LR SH. 5 (C-7)
S&CW BOOSTER PP "B" G-190199LR SH. 7 (F-2)
S&CW BOOSTER PP "B" G-190199LR SH. 7 (G-2)
S&CW-BOOSTER PP "A" G-190199LR SH. 7 (E-2)
S&CW-BOOSTER PP "A" G-190199LR SH. 7 (E-2)
REFERENCE DRAWINGS & CALCULATIONS:
FLOW DIAGRAM LEGEND & SYMBOLS HBR2-70863LR
SERVICE WATER SYSTEM SCREENING CALC. RNP-L/LR-0137
CALC. RNP-L/LR-0121
ATTACHMENT 5
REV. 1
PAGE 4 OF 10
INITIAL ISSUE AS REVISION 50.
SERVICE & COOLING WATER SYSTEM FLOW DIAGRAM
E
G-190199LR
NONE
SHEET 4 OF 13

D-10