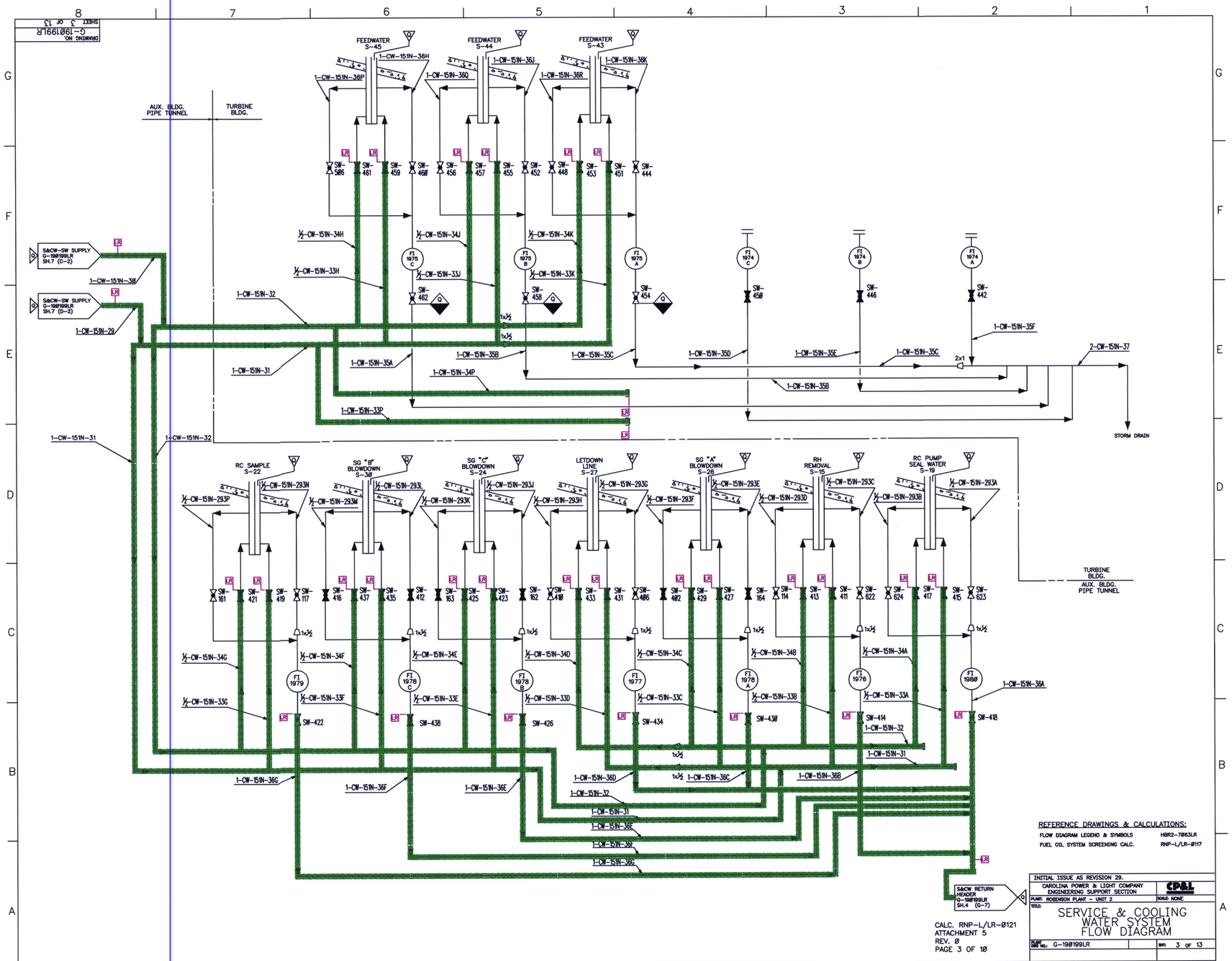

...\DOCSOPEN\WENDY_PE\23FP01_.DGN 06/07/02 10:15:01 AM

D-09