TITLE: Log on to refuel platform and set up for semi-automatic motion

TASK PERFORMED BY: _____ EVALUATOR: _____.

EVALUATOR SIGNATURE: _____ DATE: _____.

DIRECTIONS TO EVALUATOR:

Set up the bridge computer prior to the JPM by logging on as FHD, setting the encoders to "1" or "2", then logging off. This step must be repeated prior to examining additional trainees.

EVALUATION METHOD :

PERFORM

EVALUATION LOCATION:

PLANT

APPROXIMATE COMPLETION TIME:

15 MINUTES

IMPORTANCE RATING(S): 3.7 SYSTEM NUMBER(S): 234000A3.02

REFERENCES:

1. SO 18.1.A-2(3) Rev. 11(12); Operation of Refueling Platform

TASK STANDARD(S):

1. FHD is logged on to the refueling platform computer, with encoders set for "0" on all three axes.

TASK CONDITIONS:

1. There are NO irradiated components grappled to any refueling platform hoist.
2. SO 18.1.C-2(3) has been completed for alignment and checkout of the Refueling Platform.
3. The refueling gates are installed.

INITIATING CUES:

You are directed to log on to the refueling platform computer and set encoders to support **semi-automatic** motion with the gates installed.

Critical Element(s) indicated by "*" in Performance Checklist.

PERFORMANCE CHECKLIST:

STEP	STANDARD	SAT/UNSAT
Logging on to the Bridge Computer and Setting Gate Status		
1. * Touch "LOG ON" AND enter name.	"LOG ON" touch screen button actuated and name is entered.	
2. IF incorrect name was entered, THEN touch "CHANGE NAME" AND enter name.	Name is corrected if required.	
3. * Touch "ENTER PASSWORD" AND enter password.	"ENTER PASSWORD" touch screen button actuated and password is entered.	
NOTE Answering "YES" to the question "IS THE REFUELING GATE INSTALLED" modifies the Secure Travel Zone boundary to NOT allow entrance into the Transfer Canal.		
4. * At screen prompt "IS THE REFUELING GATE INSTALLED?", answer "YES" if either gate is installed OR "NO" if both gates are removed.	"YES" is entered in response to refueling gate prompt.	
5. Verify proper access level is displayed.	FUEL HANDLING DIRECTOR access is verified to be displayed.	
6. Touch "PRESS FOR OPERATION" to display "MAIN" screen.	"PRESS FOR OPERATION" touch screen button is actuated to display the "MAIN" screen.	
Selection of Encoders for Bridge, Trolley, and Hoist		
7. * Touch "SHOW MENU".	"SHOW MENU" touch screen button is actuated.	
8. * Touch "UTILITIES".	"UTILITIES" touch screen button is actuated.	

STEP	STANDARD	SAT/UNSAT
NOTE TO EVALUATOR JPM steps 9 through 17 apply to the Bridge, Trolley and Hoist encoders. The encoders can be selected in any sequence.		
CAUTION Operation in Semi-Automatic OR Full Automatic modes requires both Primary AND Redundant Encoders to be selected (i.e. "0") for each axis in order to prevent collision of the mast OR handled component in the event a single encoder fails.		
9. * Touch screen button displaying current encoder selection for the axis to be set.	Bridge encoder is selected.	
10. * On the number pad enter desired encoder selection(i.e. "0", "1" OR "2").	"0" is selected	
11. Verify desired encoder selection is displayed on button.	"0" is verified to be displayed on bridge encoder button.	
12. * Touch screen button displaying current encoder selection for the axis to be set.	Trolley encoder is selected.	
13. * On the number pad enter desired encoder selection(i.e. "0", "1" OR "2").	"0" is selected	
14. Verify desired encoder selection is displayed on button.	"0" is verified to be displayed on trolley encoder button.	
15. * Touch screen button displaying current encoder selection for the axis to be set.	Hoist encoder is selected.	
16. * On the number pad enter desired encoder selection(i.e. "0", "1" OR "2").	"0" is selected	
17. Verify desired encoder selection is displayed on button.	"0" is verified to be displayed on hoist encoder button.	
18. *Touch "RETURN TO OPERATION".	RETURN TO OPERATION pressed	
19. Perform Section 4.2 "Change Person Logged ON Computer" to ensure operation at REFUELING PLATFORM OPERATOR access level. CUE: You can stop here, you have met the termination criteria for this JPM	N/A	N/A

Comments:

Note: Any grade of UNSAT requires a comment.

JPM Overall Rating: _____
SAT/UNSAT

TASK CONDITIONS:

1. There are NO irradiated components grappled to any refueling platform hoist.
2. SO 18.1.C-2(3) has been completed for alignment and checkout of the Refueling Platform.
3. The refueling gates are installed.

INITIATING CUES:

You are directed to log on to the refueling platform computer and set encoders to support **semi-automatic** motion with the gates installed

CANDIDATE

PECO Energy Company
Peach Bottom Unit 2

SO 18.1.A-2 OPERATION OF REFUELING PLATFORM

1.0 PURPOSE

This provides the instruction necessary to operate the Refueling Platform Main Hoist for core component and DUMMY fuel bundle movements within the Fuel Pool and Reactor Core. This procedure shall be used in conjunction with Fuel Handling Procedure FH-6C, "Core Component Movement - Core Transfers", or FH-35, "Control of Material Movement in the Fuel Pool" as appropriate.

2.0 PREREQUISITES

2.1 IF performing transfers in the Reactor, THEN all prerequisites included in Procedure FH-6C, "Core Component Movement - Core Transfers" have been completed as appropriate.

2.2 IF performing transfers in the Fuel Pool only, THEN all prerequisites included in Procedure FH-35, "Control of Material Movement in the Fuel Pool" have been completed as appropriate.

2.3 DUMMY fuel bundle movement shall be governed by FH-35 OR FH-6C.

2.4 Refuel Platform started up AND checked out in accordance with SO 18.1.C-2, "Electrical, Mechanical and Pneumatic Alignment/Checkout of Refueling Platform." The main hoist section of the Refueling Platform Preoperational Checkoff List should be performed over the Reactor Cavity as soon as possible after core is accessible. Performing the preoperational checks in the cavity will ensure the mast will lower to the core height without binding.

2.5 IF operating in Full Automatic OR Semi-Automatic modes, THEN both Primary AND Redundant Encoders are selected for each axis on the UTILITIES screen(Ref. 6.5).

2.6 IF performing movement to OR from a Spent Fuel Storage Cask, THEN Cask Loading Normal Up limit shall be selected, OTHERWISE Refueling Normal Up limit shall be selected.

2.7 Attachment 9 of this procedure is posted on the Refueling Platform Mast.

3.0 PRECAUTIONS

3.1 WHEN operating equipment, IF it does NOT perform as expected, THEN place the equipment in a safe condition AND inform Shift Management or Fuel Handling Director(FHD).

3.2 Procedures SO 18.7.G-2, "Refueling Platform Overrides and Bypasses" and SO 18.7.F-2, "Handwheel Operation of Refueling Platform Bridge, Trolleys and Hoists" provide alternate methods for platform operation when the Refueling Platform is NOT performing as expected.

3.3 The monorail and frame mounted auxiliary hoist shall be full-up on hoist override with tools removed when not in use. Alternately, the tool and hoist cable may be stored in a safe location. Jam blocks shall be installed on aux hoist cables at all times.

3.4 Blade guides may be removed from the reactor core provided the associated control rod blade will be diagonally supported by fuel or other blade guide(s).

3.5 To prevent impact or mast/fuel assembly damage:

3.5.1 Trolley and Bridge shall always be accelerated AND decelerated slowly, avoiding sudden starts and stops.

3.5.2 Travel paths shall be clear before moving core components.

3.5.3 IF fuel OR a blade guide is grappled on the Main Hoist(grapple engaged), THEN "GRAPPLE NORMAL UP" light shall be lit before moving into Transfer Canal.

3.5.4 IF Main Hoist grapple is empty (grapple open), THEN Main Hoist position shall indicate less than 164 inches before moving into Transfer Canal.

3.5.5 Main Hoist grapple shall be in Normal Up position with "GRAPPLE NORMAL UP" light lit when not in use.

3.5.6 IF a core component is partially inserted into a location, THEN Bridge AND Trolley shall only be moved using the TRAVERSE SYSTEM joystick for minor adjustments.

3.5.7 IF possible, observe channel fastener as it enters the core, fuel rack or sipping canister. To ensure channel fastener does NOT catch, push or pull mast assembly as required as bundle approaches fully seated position.

3.5.8 Use extreme caution and a slow hoist speed when handling unchanneled fuel bundles. Unchanneled bundles have the potential to twist and damage the bundle. Finger springs on the lower tie plate and fuel rod spacers may catch during bundle removal OR insertion.

3.5.9 The following precautions apply when loading a fuel cask:

3.5.9.1 Top edge of cask fuel compartment could be damaged if impacted by a fuel bundle or weight of bundle is transferred to compartment. Use great care when aligning fuel bundle with cask opening.

3.5.9.1 Cask drain line protrudes into cask above the elevation of the fuel basket. Use great care when maneuvering bundles near the drain line as impacting drain line could cause fuel damage and/or drain line damage.

3.6 Mast camera may impact surrounding structures when manipulating core components in the Reactor Core periphery, Fuel Pool periphery, Fuel Preparation Machine or Spent Fuel Storage Cask. Exercise caution to avoid impact damage.

3.7 IF during hoist operation:

3.7.1 "HOIST JAM" light comes on, THEN immediately stop and lower until "HOIST JAM" light goes out, THEN inform Fuel Handling Director for instruction.

3.7.2 "HOIST LOADED" light goes out prematurely, OR the load starts to lean, THEN:

3.7.2.1 Immediately stop lowering hoist.

3.7.2.2 Verify grapple switch is in "ENGAGE" position.

3.7.2.3 Verify "GRAPPLE ENGAGED" light is lit.

3.7.2.4 Slowly raise hoist to regain the weight of the load.

3.7.2.5 Inform Fuel Handling Director.

3.7.3 "GRAPPLE ENGAGED" light goes out unexpectedly during operation, THEN immediately stop and inform Fuel Handling Director.

3.7.4 "HOIST LOADED" light comes on unexpectedly while raising grapple, THEN:

3.7.4.1 Immediately stop raising hoist.

3.7.4.2 Slowly lower hoist until "HOIST LOADED" light goes out.

3.7.4.3 Inform Fuel Handling Director.

3.7.5 "ROD BLK INTERLK #1" light does NOT light when refuel platform is over the core with the Main Hoist fuel loaded, THEN stop refuel platform operation AND inform Fuel Handling Director.

3.8 Fuel bundles may contact Control Rod Blades (CRB) at two elevations, approximately 385" and 400" hoist encoder position.

3.9 Prior to component handling concurrent with use of other unique equipment in the Reactor Cavity or Spent Fuel Pool, a determination should be made regarding the level of monitoring necessary to prevent contact between the equipment and the refuel platform mast, mast camera or core components suspended from the grapple.

Examples of unique equipment include in-vessel inspection or repair equipment, particularly those with umbilical cables. Depending on the risk of interference, consideration shall be given to positioning an individual on the refuel platform assigned the responsibility to monitor the position of the equipment (and umbilical if applicable) and alert Fuel Handling crew to STOP if interference is imminent.

3.10 If possible the fuel grapple shall be directly observed to be closed prior to lifting a load. Also check that the load's bail handle is inside the grapple head.

3.11 The RPO must NOT watch the hoist position indicator exclusively when a handled component is about to enter a designated location or when the empty grapple is approaching a seated component. The operator should observe component or grapple movement to avoid damage.

3.12 Peripheral fuel assemblies have a potential to miss their fuel support and seat low. Use extreme caution to maintain proper alignment while inserting assembly into the core.

3.13 Fuel bundles should be seated using a constant slow hoist speed while gently shaking the mast. Extreme slow speed and the absence of vibration increases the potential for bundles to require reseating.

3.14 Extra caution should be used when handling very old bundles. Careful monitoring of hoist load should be performed during lifting to ensure failure of bundle tie rods is promptly identified. In addition, channel fasteners AND bail handles have been found bent on old bundles which can lead to difficulty seating or releasing the bundle.(Reference 6.6)

3.15 Gentle rotation of the mast in both directions should be used prior to grapple engagement to ensure the fuel grapple is centered on the bail handle. Rapid OR rough rotation during this check can lead to bundle damage, particularly when moving dechanneled fuel bundles(Reference 6.6).

3.16 The Refueling Platform shall be operated at the REFUELING PLATFORM OPERATOR access level unless specified otherwise in this OR other controlling procedures.

3.17 Power is removed from the cabinet air conditioners when a FAULT LOCKOUT occurs OR the STOP push button is depressed. This may cause a "CONSOLE HIGH TEMPERATURE" alarm.

3.18 Bridge speed is limited when the Main Hoist grapple is closed(engaged) AND the Main Hoist NOT fuel loaded. In this condition the PLC logic assumes there is a single or double blade guide on the Main Hoist and limits speed to prevent excessive drag loading on the mast(Ref. 6.7).

3.19 Prior to leaving the refueling platform temporarily unattended, the platform shall be positioned as directed by the FHD and the "STOP" push button depressed. Procedure SO 18.2.A-2, "Shutdown Of Refueling Platform", shall be performed for longer periods of shutdown(e.g. lunch hour, overnight, etc.).

3.20 IF Refueling Platform power needs to be temporarily interrupted (e.g., electrical blocking for emergent repairs OR transfer to/from alternate power supply), THEN perform computer shutdown section of SO 18.2.A-2, "Shutdown of Refueling Platform" prior to interrupting power.

3.21 Deenergizing the refueling platform while over the Reactor Cavity(track switches actuated) will generate a Rod Withdrawal Block in the Main Control Room. Notify Unit Reactor Operator prior to deenergizing the refueling platform with the track switches actuated.

3.22 The touch screen on the Operator Interface Console is required to be functional in order to change configuration of certain parameters(e.g., selection of Normal Up limit, selection of encoders for each axis, modification of Secure Travel Zone to recognize Fuel Pool Gate as removed or installed) and to operate in Semi-Automatic or Full Automatic modes. If all parameters are configured as required, the touch screen is NOT required to be functional for safe refueling platform operation in manual mode. Although the screen annunciator messages will NOT be available, the corresponding conditions will be evident via other visual or functional indications.

3.23 IF power to the PLC is interrupted while operating without a functional touch screen, THEN the Fuel Pool Gate status will default to "installed" when power is restored, preventing entrance into the Transfer Canal. The PLC will also default to the Refueling Normal Up limit when power is restored.

3.24 IF the message "COMMUNICATION TO THE PLC HAS BEEN LOST" is displayed on the touch screen meaning no further screen updates are possible, THEN refueling platform operation may continue in manual mode.

3.25 The OPERATOR INTERFACE CONSOLE AND SRO Station screens may be used as an alternate to the Right Hand OR Left Hand Controllers for verification of "SLACK CABLE", "HOIST LOADED", "GRAPPLE NORMAL UP" and "GRAPPLE ENGAGED" light status.

3.26 The keyboard AND/OR mouse stored in the OPERATOR INTERFACE CONSOLE may be connected to the front of the OPERATOR INTERFACE CONSOLE and used as an alternative to the "touch" function of the touch screen.

3.27 The computer slave screen at the SRO Station is for convenience and NOT required to be operational for Refueling Platform operation.

3.28 The Mast Orientation Interlock logic is NOT required to be functional for safe Refueling Platform operation. This optional feature is only active in Full Automatic mode and is a backup to the Double Verification by the FHD and RPO OR FHD and Spotter, which is the primary means of component orientation verification. Procedure SO 18.7.G-2, "Refueling Platform Overrides and Bypasses" provides instructions necessary to bypass the Mast Orientation Interlock logic if it is NOT performing as expected.

3.29 Attachments 1 through 4 summarize Refuel Platform interlocks and annunciators, including initiating conditions and effects on the system. Some of the screen annunciators provide suggested actions based on the initiating conditions. IF any annunciators appear unexpectedly, including those with suggested actions, THEN stop platform operation AND inform FHD prior to taking any action.

3.30 Touch screen annunciators with a pink background will bring up a popup information screen when touched. Touching "ACKNOWLEDGE" will close the popup screen.

3.31 Attachments 6 through 8 provide information regarding the Secure Travel Zone, Grapple Release Zone and bridge, trolley and hoist speed zones.

3.32 A CCTAS is not required for movement of the DUMMY fuel bundle.

4.0 PERFORMANCE STEPS

NOTES

1. The performance steps section of this procedure is separated into the following subsections:

   - o 4.1, Logging ON Computer
   - o 4.2, Change Person Logged ON Computer
   - o 4.3, Selection of Encoders for Bridge, Trolley and Hoist
   - o 4.4, Selection of Normal Up Limit
   - o 4.5, Loading Fuel Move Sequence From Shuffleworks
   - o 4.6, Semi-Automatic Operation
   - o 4.7, Full Automatic Operation
   - o 4.8, Pickup Location - Fuel Pool Storage Rack
   - o 4.9, Pickup Location - Reactor Core
   - o 4.10, Pickup Location - Fuel Preparation Machine
   - o 4.11, Pickup Location - Bundle Sipping Canister
   - o 4.12, Pickup Location - Spent Fuel Storage Cask
   - o 4.13, Set Down Location - Fuel Pool Storage Rack
   - o 4.14, Set Down Location - Reactor Core
   - o 4.15, Set Down Location - Fuel Preparation Machine
   - o 4.16, Set Down Location - Bundle Sipping Canister
   - o 4.17, Set Down Location - Spent Fuel Storage Cask

2. Perform applicable subsections of Section 4.0 at the direction of the FHD.

3. Refueling Platform operating mode(i.e. Manual, Semi-Automatic or Full Automatic) is NOT prescribed in the pickup/set down subsections of this procedure. Operating mode is at the discretion of the fuel handling crew.

4.1 Logging ON Computer

4.1.1 Touch "LOG ON" AND enter name.

4.1.2 IF incorrect name was entered, THEN touch "CHANGE NAME" AND enter name.

4.1.3 Touch "ENTER PASSWORD" AND enter password.

NOTE

Answering "YES" to the question "IS THE REFUELING GATE INSTALLED" modifies the Secure Travel Zone boundary to NOT allow entrance into the Transfer Canal.

4.1.4 At screen prompt "IS THE REFUELING GATE INSTALLED?", answer "YES" if either gate is installed OR "NO" if both gates are removed.

4.1.5 Verify proper access level is displayed.

4.1.6 Touch "PRESS FOR OPERATION" to display "MAIN" screen.

4.2 Change Person Logged ON Computer

4.2.1 Touch "SHOW MENU".

4.2.2 Touch "LOG OFF"

4.2.3 Touch "YES/LOG OFF".

4.2.4 New operator perform Section 4.1 of this procedure.

4.3 Selection of Encoders for Bridge, Trolley and Hoist

NOTE

This section can only be performed by personnel with FUEL HANDLING DIRECTOR access level OR higher.

4.3.1 Touch "SHOW MENU".

4.3.2 Touch "UTILITIES".

NOTE

Steps 4.3.3 through 4.3.5 apply to the Bridge, Trolley and Hoist encoders.

```
*****************************************************************
*                          CAUTION                              *
*                                                               *
*     Operation in Semi-Automatic OR Full Automatic modes       *
*     requires both Primary AND Redundant Encoders to be        *
*     selected(i.e. "0") for each axis in order to prevent      *
*     collision of the mast OR handled component in the event   *
*     a single encoder fails(Ref. 6.5).                         *
*****************************************************************
```

4.3.3 Touch screen button displaying current encoder selection for the axis to be set.

4.3.4 On the number pad enter desired encoder selection(i.e. "0", "1" OR "2").

4.3.5 Verify desired encoder selection is displayed on button.

4.3.6 Touch "RETURN TO OPERATION".

4.3.7 Perform Section 4.2 "Change Person Logged ON Computer" of this procedure to ensure operation at REFUELING PLATFORM OPERATOR access level.

4.4 Selection of Normal Up Limit

> NOTE
>
> This section can only be performed by personnel with FUEL HANDLING DIRECTOR access level OR higher.

4.4.1 Touch "SHOW MENU".

4.4.2 Touch "UTILITIES".

4.4.3 Touch "Refueling/Cask Loading" button to select appropriate Normal Up limit for the planned evolution.

4.4.4 Verify desired Normal Up Limit is displayed.

4.4.5 Touch "RETURN TO OPERATION".

4.4.6 Perform Section 4.2 "Change Person Logged ON Computer" of this procedure to ensure operation at REFUELING PLATFORM OPERATOR access level.

4.5 Loading Fuel Move Sequence From Shuffleworks

> NOTE
>
> This section can only be performed by personnel with FUEL HANDLING DIRECTOR access level OR higher.

4.5.1 Touch "SHOW MENU".

4.5.2 Touch "UTILITIES".

4.5.3 Touch "GO TO DATABASE".

4.5.4 Verify floppy disk containing the fuel move sequence has the appropriate approvals required by RE-C-40, "Core Component Transfer Authorization Sheet Generation and Administration".

4.5.5 At the OPERATOR INTERFACE CONSOLE insert the floppy disk into the computer.

4.5.6 Touch "LOAD NEW SEQUENCE FILE".

4.5.7 Select type of move sequence, i.e., SHUFFLE, OFFLOAD OR RELOAD.

4.5.8 WHEN the prompt appears "Is The New Sequence Disk in Drive A:\", THEN touch "YES".

4.5.9 WHEN file has completed loading from disk, THEN remove floppy disk.

4.5.10 Touch "Open Sequence File".

NOTE

The Shuffleworks file designates orientation as follows:

0 - NE
1 - SE
2 - SW
3 - NW

4.5.11 Verify a sample of steps against the paper copy Core Component Transfer Authorization Sheet(CCTAS).

4.5.12 Touch "Return To Control".

4.5.13 Touch "RETURN TO OPERATION".

4.5.14 Perform Section 4.2 "Change Person Logged ON Computer" of this procedure to ensure operation at REFUELING PLATFORM OPERATOR access level.

4.6 Semi-Automatic Operation

NOTES

1. The Refuel Platform computer does NOT recognize Fuel Pool Storage Rack locations outside the Secure Travel Zone, the Fuel Preparation Machines, Bundle Sipping Canisters OR Spent Fuel Storage Cask locations as valid locations for automatic moves.

2. An automatic move can be terminated at any time by performing one of the following:
   - o touching "AUTO STOP" on the MAIN OR HOIST screen
   - o deflecting any of the master joysticks
   - o depressing "STOP" push button on START/STOP STATION
   - o depressing "TRAVEL OVERRIDE" on RIGHT HAND CONTROLLER

****
* CAUTION *
*
* Operation in Semi-Automatic mode requires both Primary *
* AND Redundant Encoders to be selected for each axis in *
* order to prevent collision of the mast OR handled *
* component in the event a single encoder fails(Ref. 6.5). *
****

4.6.1 IF desired to change mode of multiple axis automatic operation, THEN perform the following; OTHERWISE continue with step 4.6.2:

4.6.1.1 Touch "SHOW MENU".

4.6.1.2 Touch "XY/XY&Z MODE ACTIVE" as necessary to select the desired mode of multiple axis automatic operation.

4.6.1.3 Touch "PRESS FOR OPERATION".

4.6.2 IF operating in the XY mode, THEN perform the following, OTHERWISE continue with step 4.6.3 of this procedure:

4.6.2.1 IF in the Fuel Pool AND grapple is released, THEN verify hoist position indicates less than 164 inches.

4.6.2.2 IF in the Fuel Pool AND grapple is engaged, THEN verify hoist is at Normal Up position.

4.6.2.3 IF above the core AND grapple is released AND the requested location will be in the core, THEN verify hoist position indicates less than 530 inches.

4.6.2.4 IF above the core AND grapple is released AND the requested location will be in the Fuel Pool, THEN verify hoist position indicates less than 164 inches.

4.6.2.5 IF above the core AND grapple is engaged AND the requested location will be in the core, THEN verify hoist position indicates less than 355 inches.

4.6.2.6 IF above the core AND grapple is engaged AND the requested location will be in the Fuel Pool, THEN verify hoist is at Normal Up position.

4.6.3 IF operating in the XY&Z mode, THEN perform the following, OTHERWISE continue with step 4.6.4 of this procedure:

4.6.3.1 IF in the Fuel Pool AND grapple is released, THEN verify hoist position indicates less than 164 inches.

4.6.3.2 IF in the Fuel Pool AND grapple is engaged, THEN verify hoist is at Normal Up position.

4.6.3.3 IF above the core AND grapple is released, THEN verify hoist position indicates less than 530 inches.

4.6.3.4 IF above the core AND grapple is engaged, THEN verify hoist position indicates less than 355 inches.

4.6.4 Verify Bridge AND Trolley are within the Secure Travel Zone.

4.6.5 Verify Bridge AND Trolley are NOT in the Transfer Canal.

4.6.6 Touch "SELECT AUTO" on the Main OR Hoist screens.

4.6.7 IF during auto move selection it is desired to return to manual operation, THEN touch "SELECT MANUAL", OTHERWISE continue with this procedure subsection.

4.6.8 Touch "Manual Step Selection Active"/ "Auto Step Selection Active" as necessary to select "Manual Step Selection Active".

4.6.9 Touch "REQUEST" AND enter the desired location on the keypad screen.

4.6.10 IF requested location is correct, THEN touch "VERIFY"; OTHERWISE return to step 4.6.9.

4.6.11 Touch "AUTO RUN" to initiate Refueling Platform movement.

4.7 Full Automatic Operation

NOTES

1. The Refuel Platform computer does NOT recognize Fuel Pool Storage Rack locations outside the Secure Travel Zone, the Fuel Preparation Machines, Bundle Sipping Canisters OR Spent Fuel Storage Cask locations as valid locations for automatic moves.

2. An automatic move can be terminated at any time by performing one of the following:
   - o touching "AUTO STOP" on the MAIN OR HOIST screen
   - o deflecting any of the master joysticks
   - o depressing "STOP" push button on START/STOP STATION
   - o depressing "TRAVEL OVERRIDE" on RIGHT HAND CONTROLLER

```
*****************************************************************
*                          CAUTION                              *
*                                                               *
*     Operation in Full Automatic mode requires both Primary    *
*     AND Redundant encoders to be selected for each axis       *
*     in order to prevent collision of the mast OR handled      *
*     component in the event a single encoder fails(Ref. 6.5).  *
*****************************************************************
```

4.7.1 IF desired to change mode of multiple axis automatic operation, THEN perform the following; OTHERWISE continue with step 4.7.2:

4.7.1.1 Touch "SHOW MENU".

4.7.1.2 Touch "XY/XY&Z MODE ACTIVE" as necessary to select the desired mode of multiple axis automatic operation.

4.7.1.3 Touch "PRESS FOR OPERATION".

4.7.2 IF operating in the XY mode, THEN perform the following, OTHERWISE continue with step 4.7.3 of this procedure:

4.7.2.1 IF in the Fuel Pool AND grapple is released, THEN verify hoist position indicates less than 164 inches.

4.7.2.2 IF in the Fuel Pool AND grapple is engaged, THEN verify hoist is at Normal Up position.

4.7.2.3 IF above the core AND grapple is released AND the requested location will be in the core, THEN verify hoist position indicates less than 530 inches.

4.7.2.4 IF above the core AND grapple is released AND the requested location will be in the Fuel Pool, THEN verify hoist position indicates less than 164 inches.

4.7.2.5 IF above the core AND grapple is engaged AND the requested location will be in the core, THEN verify hoist position indicates less than 355 inches.

4.7.2.6 IF above the core AND grapple is engaged AND the requested location will be in the Fuel Pool, THEN verify hoist is at Normal Up position.

4.7.3 IF operating in the XY&Z mode, THEN perform the following, OTHERWISE continue with step 4.7.4 of this procedure:

4.7.3.1 IF in the Fuel Pool AND grapple is released, THEN verify hoist position indicates less than 164 inches.

4.7.3.2 IF in the Fuel Pool AND grapple is engaged, THEN verify hoist is at Normal Up position.

4.7.3.3 IF above the core AND grapple is released, THEN verify hoist position indicates less than 530 inches.

4.7.3.4 IF above the core AND grapple is engaged, THEN verify hoist position indicates less than 355 inches.

4.7.4 Verify Bridge AND Trolley are within the Secure Travel Zone.

4.7.5 Verify Bridge AND Trolley are NOT in the Transfer Canal.

4.7.6 Touch "SELECT AUTO" on the Main OR Hoist screens.

4.7.7 IF during auto move selection it is desired to return to manual operation, THEN touch "SELECT MANUAL", OTHERWISE continue with this procedure subsection.

4.7.8 Touch "Manual Step Selection Active"/ "Auto Step Selection Active" as necessary to select "Auto Step Selection Active".

> NOTE
>
> The selected portion(PICKUP/SETDOWN) of the auto move to be performed is highlighted in green on the MOVE INFORMATION section of the screen. The requested location along with its bridge and trolley coordinates are displayed in a box on the bottom of the screen.

4.7.9 IF it is desired to select a particular step in the move sequence, THEN touch "SELECT NEW STEP NUMBER" AND enter desired step on the keypad screen.

4.7.10 IF it is desired to increment to the SETDOWN portion of a step OR the PICKUP portion of the next step in the sequence, THEN touch "INCREMENT STEP".

4.7.11 IF requested location is correct, THEN touch "VERIFY"; OTHERWISE return to step 4.7.9.

4.7.12 Touch "AUTO RUN" to initiate Refueling Platform movement.

4.8 Pickup Location - Fuel Pool Storage Rack

4.8.1 Position Refuel Platform Mast over desired core component in accordance with Core Component Transfer Authorization Sheet (CCTAS).

4.8.2 Lower hoist until grapple is 6 to 12 inches above bail.

4.8.3 Verify grapple is open.

4.8.4 Rotate grapple as necessary to achieve grapple to bail alignment.

4.8.5 Slowly lower hoist until "SLACK CABLE" light is lit.

NOTE

Steps 4.8.6 through 4.8.9 shall be double verified by the Fuel Handling Director (FHD) and Refuel Platform Operator (RPO) OR Fuel Handling Director and Spotter.

4.8.6 Verify proper core component location and orientation.

4.8.7 Verify the following, THEN inform FHD of grapple position.

4.8.7.1 Grapple is centered over bail handle

4.8.7.2 Hoist position indication agrees with Attachment 9 for item seated in Fuel Pool Storage Rack.

4.8.8 WHEN directed by FHD, THEN engage grapple, AND verify "GRAPPLE ENGAGED" light is lit.

4.8.9 WHEN directed by FHD, THEN slowly raise load AND verify "HOIST LOADED" light is lit (fuel only).

NOTE

WHEN accessing storage locations outside the Secure Travel Zone, use of the TRAVEL OVERRIDE push button is required to raise the hoist. Hoist slow speed zone near Normal Up will NOT be active. IF the hoist is fuel loaded, THEN raise motion will stop automatically WHEN the selected Normal Up setpoint is reached. IF the hoist is NOT fuel loaded(empty or blade guide), THEN raise motion will NOT stop automatically WHEN the selected Normal Up setpoint is reached and must be stopped by releasing the hoist joystick. IF the joystick is NOT released, THEN the hoist will raise until the first Overhoist Backup switch stops upward motion.

4.8.10 Continue raising until grapple is fully raised, THEN verify "GRAPPLE NORMAL UP" light is lit.

4.8.11 Perform appropriate "Set Down Location" subsection of this procedure as directed by FHD.

4.9 Pickup Location - Reactor Core

4.9.1 Position Refuel Platform Mast over desired core component in accordance with Core Component Transfer Authorization Sheet (CCTAS).

4.9.2 Lower hoist until grapple is 6 to 12 inches above bail.

NOTES

1. While the bridge is over the core, the grapple will only open when it is within 1 foot of the top of a bail. If the grapple is opened in the Fuel Pool it will remain open while over the core until the GRAPPLE switch is placed in the "ENGAGE" position.

2. If the GRAPPLE switch is placed in the "RELEASE" position while the bridge is over the core but the grapple is NOT within 1 foot of the top of a bail, the grapple will remain closed and the "GRAPPLE RELEASED ALARM" will sound. If the grapple is moved to within 1 ft of the top of a bail the grapple will NOT open until the switch is first placed in the "ENGAGE" position and then placed in the "RELEASE" position.

4.9.3 Verify grapple is open.

4.9.4 Rotate grapple as necessary to achieve grapple to bail alignment.

4.9.5 Slowly lower hoist until "SLACK CABLE" light is lit.

NOTE

Steps 4.9.6 through 4.9.10 (except 4.9.9) shall be double verified by the FHD and RPO OR FHD and Spotter.

4.9.6 Verify proper core component location and orientation.

4.9.7 Verify the following, THEN inform FHD of grapple position.

4.9.7.1 Grapple is centered over bail handle.

4.9.7.2 Hoist position indication agrees with Attachment 9 for item seated in core.

4.9.8 WHEN directed by FHD, THEN engage grapple, AND verify "GRAPPLE ENGAGED" light is lit.

4.9.9 IF load is a Fuel Bundle, THEN FHD shall inform Unit Reactor Operator of pending fuel removal from the core.

4.9.10 WHEN directed by FHD, THEN slowly raise load AND verify "HOIST LOADED" light is lit (fuel only).

4.9.11 Continue raising until core component is clear of core.

4.9.11.1 Verify hoist position indicates less than 355.0 inches.

4.9.11.2 Verify item is clear of top guide.

4.9.12 IF load is a Fuel Bundle, THEN FHD shall inform Unit Reactor Operator fuel bundle has cleared core.

4.9.13 IF load is to be transferred through Transfer Canal, THEN continue raising until grapple is fully raised AND verify "GRAPPLE NORMAL UP" light is lit.

4.9.14 Perform appropriate "Set Down Location" subsection of this procedure as directed by FHD.

4.10 Pickup Location - Fuel Preparation Machine

4.10.1 Verify Fuel Prep Machine carriage is fully lowered.

4.10.2 Position Refuel Platform Mast over fuel prep machine in accordance with Core Component Transfer Authorization Sheet (CCTAS).

4.10.3 Lower hoist until grapple is 6 to 12 inches above bail.

4.10.4 Verify grapple is open.

4.10.5 Rotate grapple as necessary to achieve grapple to bail alignment.

4.10.6 Slowly lower hoist until "SLACK CABLE" light is lit.

NOTE

Steps 4.10.7 through 4.10.10 shall be double verified by the FHD and RPO OR FHD and Spotter.

4.10.7 Verify proper core component location and orientation.

4.10.8 Verify the following, THEN inform FHD of grapple position.

4.10.8.1 Grapple is centered over bail handle

4.10.8.2 Hoist position indication agrees with Attachment 9 for item seated in fuel prep machine.

4.10.9 WHEN directed by FHD, THEN engage grapple, AND verify "GRAPPLE ENGAGED" light is lit.

4.10.10 WHEN directed by FHD, THEN slowly raise load AND verify "HOIST LOADED" light is lit (fuel only).

4.10.11 Continue raising until grapple is fully raised, THEN verify "GRAPPLE NORMAL UP" light is lit.

****
* CAUTION *
*
* Automatic modes shall NOT be used to perform moves while *
* mast is in a fuel preparation machine. *
****

4.10.12 Perform appropriate "Set Down Location" subsection of this procedure as directed by FHD.

4.11 Pickup Location - Bundle Sipping Canister

4.11.1 Verify Bundle Sipping Canister lid is open.

4.11.2 Position Refuel Platform Mast over desired Bundle Sipping Canister in accordance with Core Component Transfer Authorization Sheet (CCTAS).

4.11.3 Lower hoist until grapple is 6 to 12 inches above bail.

4.11.4 Verify grapple is open.

4.11.5 Rotate grapple as necessary to achieve grapple to bail alignment.

4.11.6 Slowly lower hoist until "SLACK CABLE" light is lit.

NOTES

1. Steps 4.11.7 through 4.11.10 shall be double verified by the FHD and RPO OR FHD and Spotter.

2. Expected hoist position is determined AND recorded on Attachment 9 by use of dummy bundle per Section 4.16.

4.11.7 Verify proper core component location and orientation.

4.11.8 Verify the following, THEN inform FHD of grapple position.

4.11.8.1 Grapple is centered over bail handle

4.11.8.2 Hoist position indication agrees with value posted on Attachment 9 for sipping canister in use.

4.11.9 WHEN directed by FHD, THEN engage grapple AND verify "GRAPPLE ENGAGED" light is lit.

****
* CAUTION *
*
* Use extreme care to avoid collision of fuel bundle *
* with open Sipping Canister lid. *
****

4.11.10 WHEN directed by FHD, THEN slowly raise load AND verify "HOIST LOADED" light is lit (fuel only).

4.11.11 Continue raising until grapple is fully raised, THEN verify "GRAPPLE NORMAL UP" light is lit.

4.11.12 Perform appropriate "Set Down Location" subsection of this procedure as directed by FHD.

4.12 Pickup Location - Spent Fuel Storage Cask

4.12.1 Position Refuel Platform Mast over desired core component in accordance with Core Component Transfer Authorization Sheet (CCTAS).

4.12.2 Lower hoist until grapple is 6 to 12 inches above bail.

4.12.3 Verify grapple is open.

4.12.4 Rotate grapple as necessary to achieve grapple to bail alignment.

4.12.5 Slowly lower hoist until "SLACK CABLE" light is lit.

> NOTE
>
> Steps 4.12.6 through 4.12.9 shall be double verified by the FHD and RPO OR FHD and Spotter.

4.12.6 Verify proper core component location and orientation.

4.12.7 Verify the following, THEN inform FHD of grapple position.

4.12.7.1 Grapple is centered over bail handle.

4.12.7.2 Hoist position indication agrees with Attachment 9 for item seated in Cask.

4.12.8 WHEN directed by FHD, THEN engage grapple, AND verify "GRAPPLE ENGAGED" light is lit.

4.12.9 WHEN directed by FHD, THEN slowly raise load AND verify "HOIST LOADED" light is lit.

4.12.10 Continue raising until grapple is fully raised, THEN verify "GRAPPLE NORMAL UP" light is lit.

4.12.11 Perform appropriate "Set Down Location" subsection of this procedure as directed by FHD.

4.13 Set Down Location - Fuel Pool Storage Rack

4.13.1 Position core component over desired location in accordance with Core Component Transfer Authorization Sheet (CCTAS).

4.13.2 Rotate core component as necessary to achieve proper orientation.

4.13.3 Perform Double Verification to ensure proper core component location and orientation.

NOTES

1. Tooling may be utilized as necessary to guide a bent channel fastener into the spent fuel rack.

2. WHEN accessing storage locations outside the Secure Travel Zone, THEN use of the TRAVEL OVERRIDE push button is required to lower OR raise the hoist. Hoist slow speed zones near rack entrance, seating AND Normal Up will NOT be active.

4.13.4 WHEN directed by FHD, THEN lower load until "SLACK CABLE" light is lit.

NOTE

Steps 4.13.5 through 4.13.7 shall be double verified by the FHD and RPO OR FHD and Spotter.

4.13.5 Verify the following, THEN inform FHD of grapple position.

4.13.5.1 Component elevation appears equivalent to other stored components in the rack.

4.13.5.2 Hoist position indication agrees with Attachment 9 for item seated in Fuel Pool Storage Rack.

4.13.6 WHEN directed by FHD, THEN release grapple, AND verify grapple is open.

4.13.7 Slowly raise hoist while verifying "HOIST LOADED" light remains OFF.

4.13.8 Record completion of component transfer on CCTAS.

4.14 Set Down Location - Reactor Core

4.14.1 Position core component over desired location in accordance with Core Component Transfer Authorization Sheet (CCTAS).

4.14.2 Lower load until hoist position indicates approximately 355 inches, THEN stop lowering.

4.14.3 Rotate core component as necessary to achieve proper orientation.

4.14.4 Perform Double Verification to ensure proper core component location and orientation.

4.14.5 IF load is a fuel bundle, THEN FHD shall inform Unit Reactor Operator of pending fuel insertion in core.

> NOTE
>
> Fuel bundle may contact CRBs at two elevations approximately 385 inches and 400 inches hoist encoder position.

4.14.6 WHEN directed by FHD, THEN lower load until "SLACK CABLE" light is lit.

> NOTE
>
> Steps 4.14.7 through 4.14.9 shall be double verified by the FHD and RPO OR FHD and Spotter.

4.14.7 Verify the following, THEN inform FHD of grapple position.

4.14.7.1 Component elevation appears equivalent to other components in the Reactor Core.

4.14.7.2 Hoist position indication agrees with Attachment 9 for item seated in Reactor Core.

4.14.8 WHEN directed by FHD, THEN release grapple, AND verify grapple is open.

4.14.9 Slowly raise hoist while verifying "HOIST LOADED" light remains OFF.

4.14.10 Record completion of component transfer on CCTAS.

4.14.11 IF load was a fuel bundle, THEN FHD shall inform Unit Reactor Operator of completion of fuel insertion in core.

4.15 Set Down Location - Fuel Preparation Machine

4.15.1 Verify Fuel Prep Machine carriage is fully lowered.

4.15.2 Position component over desired fuel prep machine in accordance with Core Component Transfer Authorization Sheet (CCTAS).

4.15.3 Rotate core component as necessary to achieve proper orientation.

4.15.4 Perform Double Verification to ensure proper core component location and orientation.

4.15.5 WHEN directed by FHD, THEN lower load until "SLACK CABLE" light is lit.

> NOTE
>
> Steps 4.15.6 through 4.15.8 shall be double verified by the FHD and RPO OR FHD and Spotter.

4.15.6 Verify Hoist position indication agrees with Attachment 9 for item seated in fuel prep machine, THEN inform FHD of grapple position.

4.15.7 WHEN directed by FHD, THEN release grapple, AND verify grapple is open.

4.15.8 Slowly raise hoist while verifying "HOIST LOADED" light remains OFF.

4.15.9 Record completion of component transfer on CCTAS.

4.16 Set Down Location - Bundle Sipping Canister

```
*****************************************************************
*                          CAUTION                              *
*                                                               *
*     Use extreme care to avoid collision of fuel bundle        *
*     with open Sipping Canister lid.                           *
*****************************************************************
```

4.16.1 Verify Bundle Sipping Canister lid is open.

> NOTE
>
> The following step determines the expected hoist position for use of sipping canisters. It shall be performed one time for each sipping canister to be used. Reactor Engineering can provide information on dummy bundle location.

4.16.2 Obtain and record hoist position of bundle seated in sipping canister.

4.16.2.1 Fuel Handling Director and Refuel Platform Operator or Spotter, verify DUMMY fuel bundle location.

4.16.2.2 Grapple and raise DUMMY bundle in accordance with Section 4.8.

4.16.2.3 Position DUMMY bundle over sipping canister and rotate bundle to achieve alignment.

4.16.2.4 WHEN directed by FHD, THEN slowly lower load until "SLACK CABLE" light is lit.

4.16.2.5 Using underwater camera, verify bundle is fully seated in sipping canister.

> NOTE
>
> The range(target hoist position) for a fuel bundle seated in a Bundle Sipping Canister(refer to Attachment 9) is calculated by subtracting 1.5 inches from, AND adding 0.5 inches to, the hoist position indication obtained below.

4.16.2.6 Record hoist position AND calculate the range for each Bundle Sipping Canister below:

SIPPING CANISTER ID/ LOCATION	HOIST POSITION INDICATION	RANGE
1. _____	_____	_____-_____
2. _____	_____	_____-_____

4.16.2.7 Perform appropriate steps in Sections 4.11 and 4.13 to store DUMMY bundle in Fuel Pool Storage Rack location in AS-FOUND position.

4.16.2.8 Record the ID/Location AND Range for each Sipping Canister on the copy of Attachment 9 posted on the Refueling Platform mast.

4.16.3 Position fuel bundle over desired bundle sipping canister in accordance with Core Component Transfer Authorization Sheet (CCTAS).

4.16.4 Rotate fuel bundle as necessary to achieve proper insertion alignment.

4.16.5 Perform Double Verification to ensure proper core component location and orientation.

4.16.6 WHEN directed by FHD, THEN lower load until "SLACK CABLE" light is lit.

NOTE

Steps 4.16.7 through 4.16.9 shall be double verified by the FHD and RPO OR FHD and Spotter.

4.16.7 Verify the following, THEN inform FHD of grapple position.

4.16.7.1 Fuel Bundle is fully seated in the Bundle Sipping Canister

4.16.7.2 Hoist position indication agrees with value posted on Attachment 9 for sipping canister in use.

4.16.8 WHEN directed by FHD, THEN release grapple, AND verify grapple is open.

4.16.9 Slowly raise hoist while verifying "HOIST LOADED" light remains OFF.

4.16.10 Record completion of component transfer on CCTAS.

4.17 Set Down Location - Spent Fuel Storage Cask

4.17.1 Position core component over desired location in accordance with Core Component Transfer Authorization Sheet(CCTAS).

4.17.2 Lower load until hoist indicates approximately 10 inches, THEN stop lowering.

4.17.3 Rotate core component as necessary to achieve proper orientation.

4.17.4 Perform double verification to ensure proper core component location AND orientation.

4.17.5 WHEN directed by FHD, THEN lower load until "SLACK CABLE" light is lit.

NOTE
Steps 4.17.6 through 4.17.8 shall be double verified by the FHD and RPO OR FHD and Spotter.

4.17.6 Verify the following, THEN inform FHD of grapple position.

4.17.6.1 Component elevation appears equivalent to other stored components in the cask.

4.17.6.2 Hoist position indication agrees with Attachment 9 for an item seated in cask.

4.17.7 WHEN directed by FHD, THEN release grapple AND verify grapple is open.

4.17.8 Slowly raise hoist while verifying "HOIST LOADED" light remains OFF.

4.17.9 Record completion of component transfer on CCTAS.

5.0 CONTROL STATIONS

5.1 20C950A, "U/2 Refueling Platform Left Hand Controller"

5.2 20C950B, "U/2 Refueling Platform Right Hand Controller"

5.3 HS-2-18-20S006, "U/2 Refueling Platform Start/Stop Station"

5.4 XC-80832 "U/2 Refueling Platform Operator Interface Console"

6.0 REFERENCES

6.1 M-1-M-631, U/2 GE Refueling Platform Instruction Manual, Volume I

6.2 M-1-M-632, U/2 GE Refueling Platform Instruction Manual, Volume II

6.3 326-P-VC-38, 39, 45, PBAPS Refueling Platform Instruction Manual Units 2 and 3

6.4 PECO Fuel Handling (FH) Procedures

6.5 10CFR50.59 Safety Evaluation for MOD P00758 Refueling Platform Controls Upgrade(ECR 98-02407)

6.6 INPO OE 7535, Failed Fuel Bundle at Oyster Creek

6.7 SIL 594, "Refuel Platform Triangular Mast Drag Loading"

6.8 ECR PB 98-02612, MOD P00758 Refueling Platform Controls Upgrade

6.9 ECR PB 99-00352, Modify Refueling Interlocks to Eliminate Main Hoist Not Normal Up Interlock

6.10 AR A1238197e01, Mod P758 Procedure Strategy Notes for SO 18.1.A-2(3)

7.0 TECHNICAL SPECIFICATION

7.1 Section 3.9.1

8.0 INTERFACING PROCEDURES

8.1 FH-6C, "Core Component Movement - Core Transfers"

8.2 FH-35, "Control of Material Movement in the Fuel Pool"

8.3 RE-C-40, "Core Component Transfer Authorization Sheet Generation and Administration"

8.4 SO 18.1.C-2, "Electrical, Mechanical and Pneumatic Alignment/Checkout of Refueling Platform"

8.5 SO 18.2.A-2, "Shutdown of Refueling Platform"

8.6 SO 18.7.G-2, "Refueling Platform Overrides and Bypasses"

8.7 SO 18.7.F-2, "Handwheel Operation of Refueling Platform Bridge, Trolleys and Hoists"

9.0 ATTACHMENTS

1. Interlock Status Display Annunciators
2. Main Screen Annunciators
3. Hoist Screen Annunciators
4. Auto Screen Annunciators
5. Hoist Condition By Elevation
6. Secure Travel Zone Description
7. Bridge And Trolley Zone Enforcement
8. Main Hoist Speed Zones
9. Hoist Encoder Position Ranges

ATTACHMENT 1

INTERLOCK STATUS DISPLAY ANNUNCIATORS

ANNUNCIATOR	INITIATING CONDITIONS	EFFECT ON OPERATIONS
ROD BLK INTERLK #1 (ROD BLOCK INTERLOCK #1)	BRIDGE NEAR OR OVER CORE AND ANY HOIST FUEL LOADED (See Note)	CONTROL ROD WITHDRAWAL BLOCK (RMCS), ROD WITHDRAW BLOCK ANNUNCIATOR - MCR, WHITE WITHDRAW PERMIT LIGHT OFF - MCR
BRIDGE REVERSE STOP #1	BRIDGE NEAR OR OVER CORE AND ANY HOIST FUEL LOADED AND NOT ALL RODS FULL IN	NO BRIDGE REVERSE MOTION
ROD BLK INTERLK #2 (ROD BLOCK INTERLOCK #2)	BRIDGE NEAR OR OVER CORE AND RX MODE SW NOT IN REFUEL OR ROD NOT SELECTED	CONTROL ROD WITHDRAWAL BLOCK (RMCS), ROD WITHDRAW BLOCK ANNUNCIATOR - MCR, WHITE WITHDRAW PERMIT LIGHT OFF - MCR
BRIDGE REVERSE STOP #2		NO BRIDGE REVERSE MOTION
FUEL HOIST INTERLK (FUEL HOIST INTERLOCK)	BRIDGE NEAR OR OVER CORE AND NOT ALL RODS FULL IN	MAIN HOIST INOPERATIVE
MONO HOIST INTERLK (MONO HOIST INTERLOCK)	BRIDGE NEAR OR OVER CORE AND NOT ALL RODS FULL IN AND APPLICABLE HOIST FUEL LOADED	MONO AUX HOIST INOPERATIVE
FRAME HOIST INTERLK (FRAME HOIST INTERLOCK)		FRAME AUX HOIST INOPERATIVE
FAULT LOCKOUT	MOTOR THERMAL OL - HOIST, BRIDGE, TROLLEY OPER CHECK TIMER - HOIST, BRIDGE, TROLLEY MOTOR DRIVE FAULT - HOIST, BRIDGE, TROLLEY ENCODER COMPARE ERROR - HOIST, BRIDGE, TROLLEY MAIN HOIST OVERSPEED PHASE LOSS MAIN CONTROL POWER OFF CABINET DOOR OPEN ON TROLLEY DECK VARIABLE SPEED SWITCHES NOT IN NEUTRAL DURING STARTUP	BRIDGE WILL NOT OPERATE NO BRIDGE, TROLLEY, HOIST MOTION GRAPPLES FAIL CLOSED
TEST IN PROG (TEST IN PROGRESS)	TEST BOX CONNECTED OR TESTING SCREEN ACTIVE	VARIABLE - DEPENDS ON TEST BUTTON POSITION
BACKUP HOIST LIMIT	MAIN HOIST TRAVEL TO APPROX. 1" ABOVE CASK LOADING NORMAL UP(OVERHOIST BACKUP SWITCH #1) OR APPROX. 11" ABOVE CASK LOADING NORMAL UP(OVERHOIST BACKUP SWITCH #2)	FURTHER MAIN HOIST RAISING PROHIBITED

NOTE: Depressing "STOP" push button with bridge near or over the core will also initiate a Rod Block Interlock #1.

ATTACHMENT 2

MAIN SCREEN ANNUNCIATORS

ANNUNCIATOR	INITIATING CONDITIONS	EFFECT ON OPERATIONS
TRAVEL OVERRIDE ACTIVATED (flashing)	TRAVEL OVERRIDE button activated	Bridge/Trolley/Hoist motion permitted at slow speed
SAFETY TRAVEL INTERLOCK	Bridge/Trolley outside Secure Travel Zone	NO Bridge/Trolley/Hoist motion
PLC OVERRIDE ACTIVE	PLC/COMPUTER OVERRIDE key switch in OVERRIDE position	All PLC functions/interlocks bypassed. Bridge/Trolley/Hoist motion at slow speed.
3" MOTION INTERLOCK HAS BEEN EXCEEDED	Bridge AND/OR Trolley moved more than 3" with the hoist lowered during component insertion	NO further motion in offending direction [TRAVEL OVERRIDE can be used to realign the Bridge/Trolley]
PHASE LOSS DETECTED	Loss of one OR more phases of incoming 480V power	NO Bridge/Trolley/Hoist motion (Will also result in a FAULT LOCKOUT)
CONSOLE TEMPERATURE ALARM	High temperature in the Trolley Control Cabinet, Trolley PLC Cabinet, OR Operator Interface Console	None - alarm only
FAULT OVERRIDE KEYSWITCH ACTIVATED (flashing)	FAULT OVERRIDE key switch turned to OVERRIDE position	Fault Lockout circuit bypassed. Fault conditions will NOT be annunciated via a FAULT LOCKOUT. However, FAULT CONDITION OVERRIDDEN annunciator will appear when a fault condition occurs.
FAULT CONDITION OVERRIDDEN	FAULT OVERRIDE key switch turned to OVERRIDE position concurrent with a valid Fault condition	Fault Lockout circuit bypassed. New fault conditions will NOT be annunciated.
SECURE TRAVEL ZONE BYPASSED (flashing)	Secure Travel Zone bypassed on UTILITIES screen	NO Secure Travel Zone enforcement
A PLC I/O FAULT HAS BEEN DETECTED	A PLC I/O module is NOT responding to commands from the CPU, OR the PLC configuration file detects a module has been removed	Variable - depends on the affected module
COMMUNICATION TO THE PLC HAS BEEN LOST	Loss of communication between the PC AND the PLC	NO further screen updates [Refueling Platform operation may continue in manual mode]
HOIST IS LOADED AND NOT AT THE CASK LOADING UP LIMIT	Bridge AND/OR trolley attempting to enter the Cask Zone when fuel loaded AND NOT at the Cask Loading Normal Up limit with Cask Loading Up Limit selected	NO Bridge/Trolley/Hoist motion

ATTACHMENT 2(cont.)

MAIN SCREEN ANNUNCIATORS

ANNUNCIATOR	INITIATING CONDITIONS	EFFECT ON OPERATIONS
ROD BLOCK INTERLOCK #1	BRIDGE NEAR OR OVER CORE AND ANY HOIST FUEL LOADED	CONTROL ROD WITHDRAWAL BLOCK (RMCS), ROD WITHDRAW BLOCK ANNUNCIATOR - MCR, WHITE WITHDRAW PERMIT LIGHT OFF - MCR
BRIDGE REVERSE STOP #1	BRIDGE NEAR OR OVER CORE AND ANY HOIST FUEL LOADED AND NOT ALL RODS FULL IN	NO BRIDGE REVERSE MOTION
ROD BLOCK INTERLOCK #2	BRIDGE NEAR OR OVER CORE AND RX MODE SW NOT IN REFUEL OR ROD NOT SELECTED	CONTROL ROD WITHDRAWAL BLOCK (RMCS), ROD WITHDRAW BLOCK ANNUNCIATOR - MCR, WHITE WITHDRAW PERMIT LIGHT OFF - MCR
BRIDGE REVERSE STOP #2	BRIDGE NEAR OR OVER CORE AND RX MODE SW NOT IN REFUEL OR ROD NOT SELECTED	NO BRIDGE REVERSE MOTION
FUEL HOIST INTERLOCK	BRIDGE NEAR OR OVER CORE AND NOT ALL RODS FULL IN	MAIN HOIST INOPERATIVE
MONO HOIST INTERLOCK	BRIDGE NEAR OR OVER CORE AND NOT ALL RODS FULL IN AND MONO HOIST FUEL LOADED	MONO AUX HOIST INOPERATIVE
FRAME HOIST INTERLOCK	BRIDGE NEAR OR OVER CORE AND NOT ALL RODS FULL IN AND FRAME HOIST FUEL LOADED	FRAME AUX HOIST INOPERATIVE
FAULT DETECTED	MOTOR THERMAL OL - HOIST, BRIDGE, TROLLEY OPER CHECK TIMER - HOIST, BRIDGE, TROLLEY MOTOR DRIVE FAULT - HOIST, BRIDGE, TROLLEY ENCODER COMPARE ERROR - HOIST, BRIDGE, TROLLEY MAIN HOIST OVERSPEED PHASE LOSS MAIN CONTROL POWER OFF CABINET DOOR OPEN ON TROLLEY DECK VARIABLE SPEED SWITCHES NOT IN NEUTRAL DURING STARTUP	BRIDGE WILL NOT OPERATE NO BRIDGE, TROLLEY, HOIST MOTION GRAPPLES FAIL CLOSED

ATTACHMENT 3

HOIST SCREEN ANNUNCIATORS

Annunciator	Initiating Conditions	Effect on Operations
TRAVEL OVERRIDE ACTIVATED (flashing)	TRAVEL OVERRIDE button activated	Bridge/Trolley/Hoist motion permitted at slow speed
SAFETY TRAVEL INTERLOCK	Bridge/Trolley outside Secure Travel Zone	NO Bridge/Trolley/Hoist motion
PLC OVERRIDE ACTIVE	PLC/COMPUTER OVERRIDE key switch in OVERRIDE position	All PLC functions/interlocks bypassed. Bridge/Trolley/Hoist motion at slow speed.
3" MOTION INTERLOCK HAS BEEN EXCEEDED	Bridge AND/OR Trolley moved more than 3" with the hoist lowered during component insertion	NO further motion in offending direction (TRAVEL OVERRIDE can be used to realign Bridge/Trolley)
PHASE LOSS DETECTED	Loss of one OR more phases of incoming 480V power	NO Bridge/Trolley/Hoist motion (Will also result in a FAULT LOCKOUT)
CONSOLE TEMPERATURE ALARM	High temperature in the Trolley Control Cabinet, Trolley PLC Cabinet, OR Operator Interface Console	None - alarm only
FAULT OVERRIDE KEYSWITCH ACTIVATED (flashing)	FAULT OVERRIDE key switch turned to OVERRIDE position	Fault Lockout circuit bypassed. Fault conditions will NOT be annunciated via a FAULT LOCKOUT. However, FAULT CONDITION OVERRIDDEN annunciator will appear when a fault condition occurs.
FAULT CONDITION OVERRIDDEN	FAULT OVERRIDE key switch turned to OVERRIDE position concurrent with a valid Fault condition	Fault Lockout circuit bypassed. New fault conditions will not be annunciated.
HOIST NOT IN PERMISSIVE ZONE	Hoist outside Secure Travel Zone	NO Hoist motion. NO Bridge/Trolley motion in offending direction.
SECURE TRAVEL ZONE BYPASSED (flashing)	Secure Travel Zone bypassed on UTILITIES screen	NO Secure Travel Zone enforcement
A PLC I/O FAULT HAS BEEN DETECTED	A PLC I/O module is NOT responding to commands from the CPU, OR the PLC configuration file detects a module has been removed	Variable - depends on the affected module
ROD BLOCK INTERLOCK #1	BRIDGE NEAR OR OVER CORE AND ANY HOIST FUEL LOADED	CONTROL ROD WITHDRAWAL BLOCK (RMCS), ROD WITHDRAW BLOCK ANNUNCIATOR - MCR, WHITE WITHDRAW PERMIT LIGHT OFF - MCR
BRIDGE REVERSE STOP #1	BRIDGE NEAR OR OVER CORE AND ANY HOIST FUEL LOADED AND NOT ALL RODS FULL IN	NO BRIDGE REVERSE MOTION
ROD BLOCK INTERLOCK #2	BRIDGE NEAR OR OVER CORE AND RX MODE SW NOT IN REFUEL OR ROD NOT SELECTED	CONTROL ROD WITHDRAWAL BLOCK (RMCS), ROD WITHDRAW BLOCK ANNUNCIATOR - MCR, WHITE WITHDRAW PERMIT LIGHT OFF - MCR
COMMUNICATION TO THE PLC HAS BEEN LOST	Loss of communication between the PC AND the PLC	NO further screen updates (Refueling Platform operation may continue in manual mode)

ATTACHMENT 3(Cont.)

HOIST SCREEN ANNUNCIATORS

Annunciator	Initiating Conditions	Effect on Operations
HOIST IS LOADED AND NOT AT THE CASK LOADING UP LIMIT	Bridge AND/OR trolley attempting to enter the Cask Zone when fuel loaded AND NOT at the Cask Loading Normal Up limit with Cask Loading Up Limit selected	NO Bridge/Trolley/Hoist motion
THERE IS A CONFLICT BETWEEN THE PLC AND EXTERNAL FUEL HOIST LOADED CONDITIONS	Set point module SP-MHL indicates main hoist is fuel loaded and analog load input to PLC indicates NOT fuel loaded, OR vice-versa	None [Evaluate operability of refueling interlocks]
GRAPPLE RELEASE INTERLOCK	Grapple switch in release position AND 1) main hoist fuel loaded, OR 2) hoist NOT within 12" of fuel seated in the core	Main hoist grapple will NOT release; GRAPPLE RELEASED ALARM will sound on Right Hand Controller.
HOIST RAISE LOCKOUT	Main hoist fuel loaded AND grapple limit switches indicate grapple open	NO main hoist raise motion
MAST ORIENTATION CONFLICT	Mast NOT oriented correctly based on fuel move sequence file AND mast orientation during component pickup, with hoist below Mast Orientation Interlock active elevation	NO main hoist lower motion
MAST ORIENTATION INTERLOCK IS BYPASSED	MAST ORIENTATION INTERLOCK is bypassed on UTILITIES screen	Mast Orientation Interlock NOT functional
BRIDGE REVERSE STOP #2	BRIDGE NEAR OR OVER CORE AND RX MODE SW NOT IN REFUEL OR ROD NOT SELECTED	NO BRIDGE REVERSE MOTION
FUEL HOIST INTERLOCK	BRIDGE NEAR OR OVER CORE AND NOT ALL RODS FULL IN	MAIN HOIST INOPERATIVE
FAULT DETECTED	MOTOR THERMAL OL - HOIST, BRIDGE, TROLLEY OPER CHECK TIMER - HOIST, BRIDGE, TROLLEY MOTOR DRIVE FAULT - HOIST, BRIDGE, TROLLEY ENCODER COMPARE ERROR - HOIST, BRIDGE, TROLLEY MAIN HOIST OVERSPEED PHASE LOSS MAIN CONTROL POWER OFF CABINET DOOR OPEN ON TROLLEY DECK VARIABLE SPEED SWITCHES NOT IN NEUTRAL DURING STARTUP	BRIDGE WILL NOT OPERATE NO BRIDGE, TROLLEY, HOIST MOTION GRAPPLES FAIL CLOSED
OVERHOIST BACKUP LIMIT #1	MAIN HOIST TRAVEL TO APPROX. 1" ABOVE CASK LOADING NORMAL UP	FURTHER MAIN HOIST RAISING PROHIBITED
OVERHOIST BACKUP LIMIT #2	MAIN HOIST TRAVEL TO APPROX. 11" ABOVE CASK LOADING NORMAL UP	FURTHER MAIN HOIST RAISING PROHIBITED
MAIN HOIST MOTION ERROR	Hoist motion was commanded in one direction AND hoist moved more than 2" from its starting point in other direction	NO hoist motion until condition acknowledged

ATTACHMENT 4

AUTO SCREEN ANNUNCIATORS

Annunciator	Initiating Conditions	Effect on Operations
YOU HAVE REQUESTED AN INVALID LOCATION	A location was requested which does NOT exist in the location database	CANNOT auto move to requested location
SEMI-AUTOMATIC IS NOT PERMISSIVE OR AUTOMATIC IS NOT PERMISSIVE	Automatic move requested which requires movement through Transfer Canal AND: 1) hoist NOT at Normal Up with grapple closed, OR 2) hoist position NOT less than 164" with grapple open	Auto move will NOT be executed
REQUEST PROHIBITED GATE IS INSTALLED	Bridge in pool AND auto move requested to core AND Refueling gate indicated as installed during LOGON	Auto move will NOT be executed

ATTACHMENT 5

HOIST CONDITION BY ELEVATION

Hoist Condition:	HOIST ENCODER VALUE:
Refueling Normal Up Limit:	0.00
Cask Loading Normal Up Limit	-6.00
Full Down Limit in Core:	553.00
Full Down Limit in Pool:	190.00
Full Down Limit at Prep Machines:	170.00
Full Down Limit in Cask area (Refueling Normal Up selected):	360.00
Full Down Limit in Cask area (Cask Loading Normal Up selected):	190.00
Set down of First Mast Section:	175.00
Set down of Second Mast Section:	372.00
Core Clear Grapple Closed:	< 355.00
Core Clear Grapple Open:	< 530.00
Racks Clear Grapple Closed:	Normal Up
Racks Clear Grapple Open:	< 164.00
Canal Clear Grapple Closed:	Normal Up
Canal Clear Grapple Open:	< 164.00
Cask Clear Fuel Loaded (Note: Only effective if Cask Loading Normal Up limit is selected):	< -6.00
Cask Clear Grapple Open:	< 164.00
Fuel entry slow zone core:	365.00 to 400.00
Fuel entry slow zone pool racks:	12.00 to 26.00
Fuel entry slow zone cask area:	14.00 to 28.00
Fuel seating slow limit core:	> 536.00
Fuel seating slow limit pool racks:	> 177.00
Fuel seating slow limit cask area (Note: Only effective if Cask Loading Normal Up limit is selected):	> 177.00
Mast Orientation Interlock Active-Core:	> 365.00
Mast Orientation Interlock Active-Pool:	> 7.00
Grapple Release Zone in Core:	> 536.00

Note: Encoder values are approximate.

ATTACHMENT 6

SECURE TRAVEL ZONE DESCRIPTION

The PLC receives inputs from the bridge, trolley and hoist encoders, TRAVEL OVERRIDE push button, and grapple open/closed indication and compares that information with the defined areas or zone.

SECURE TRAVEL ZONE

The Secure Travel Zone for the bridge and trolley consists of two zones, one slightly smaller than the other. The smaller zone is the high speed zone which allows the bridge, trolley and main hoist to operate at their designed full speeds. The larger of the zones is the slow speed zone and slows the bridge and trolley speeds to 5 FPM until the Secure Travel Zone limit is reached activating the SAFETY TRAVEL INTERLOCK which stops the refueling platform.

The TRAVEL OVERRIDE push button is to allow further travel beyond the Secure Travel Zone or to travel back into the Secure Travel Zone at maximum speed of 5 FPM.

High speed zones and slow speed zones exist in the core, Transfer Canal and Fuel Pool(see attachment 7). If, during log on, the question "IS THE REFUELING GATE INSTALLED?" is answered yes, the refueling platform will be limited to the Pool Zone. The Canal Zone will no longer be accessible from the pool.

Main Hoist permissive zone for entrance into the Transfer Canal is dependent on whether the grapple is open OR closed. IF the grapple is open, THEN the hoist position must be less than 164 inches. IF the grapple is closed, THEN the hoist must be at Normal Up position.

Bridge and trolley speed are limited to 2 FPM whenever the hoist is not at a "clear" elevation, depending on grapple status - see Attachment 5.

A zone in front of the East fuel prep machine enables the refueling bridge and trolley to drive into the prep machine WITHOUT the use of the Travel Override button. The bridge and trolley are limited to 5 FPM but the hoist may operate at 40 FPM. Travel Override is required to access the West fuel prep machine, but once in the prep zone, Travel Override is not required and bridge, trolley and hoist motion are the same as for the East prep machine.

The cask zones include the Cask Buffer Zone and the Cask Zone. They are in effect only when the Cask Loading Normal Up limit has been selected. The Cask Buffer Zone is an "L" shaped area just outside the cask pit where the racks end. Bridge and trolley motion will stop in this zone if the hoist is fuel loaded and NOT at the Cask Loading Normal Up limit. The bridge and trolley are limited to 30 FPM but the hoist may operate at 40 FPM.

The Cask Zone is still within the Pool Zone limits, with the Secure Travel Zone being defined by the Pool Zone limits. The bridge and trolley are limited to 30 FPM but the hoist may operate at 40 FPM.

ATTACHMENT 6(cont.)

HOIST AND GRAPPLE ZONES

Hoist speed is dependent on bridge and trolley position and grapple elevation. Hoist speed zones while in the Secure Travel Zone are shown on attachment 8. The hoist, while outside of the Secure Travel Zone is limited to a maximum of 10 FPM. The Grapple Full Down light will illuminate while outside of the Secure Travel Zone because the down limit is zone-dependent. The JOG LOWER speed is 2 FPM. Grapple release is prohibited if the bridge and trolley are over the core with the grapple engaged and hoist is NOT within 12 inches from the top of fuel seated in the core. This is known as the Grapple Release Zone(GRZ).

ATTACHMENT 7

BRIDGE AND TROLLEY ZONE ENFORCEMENT

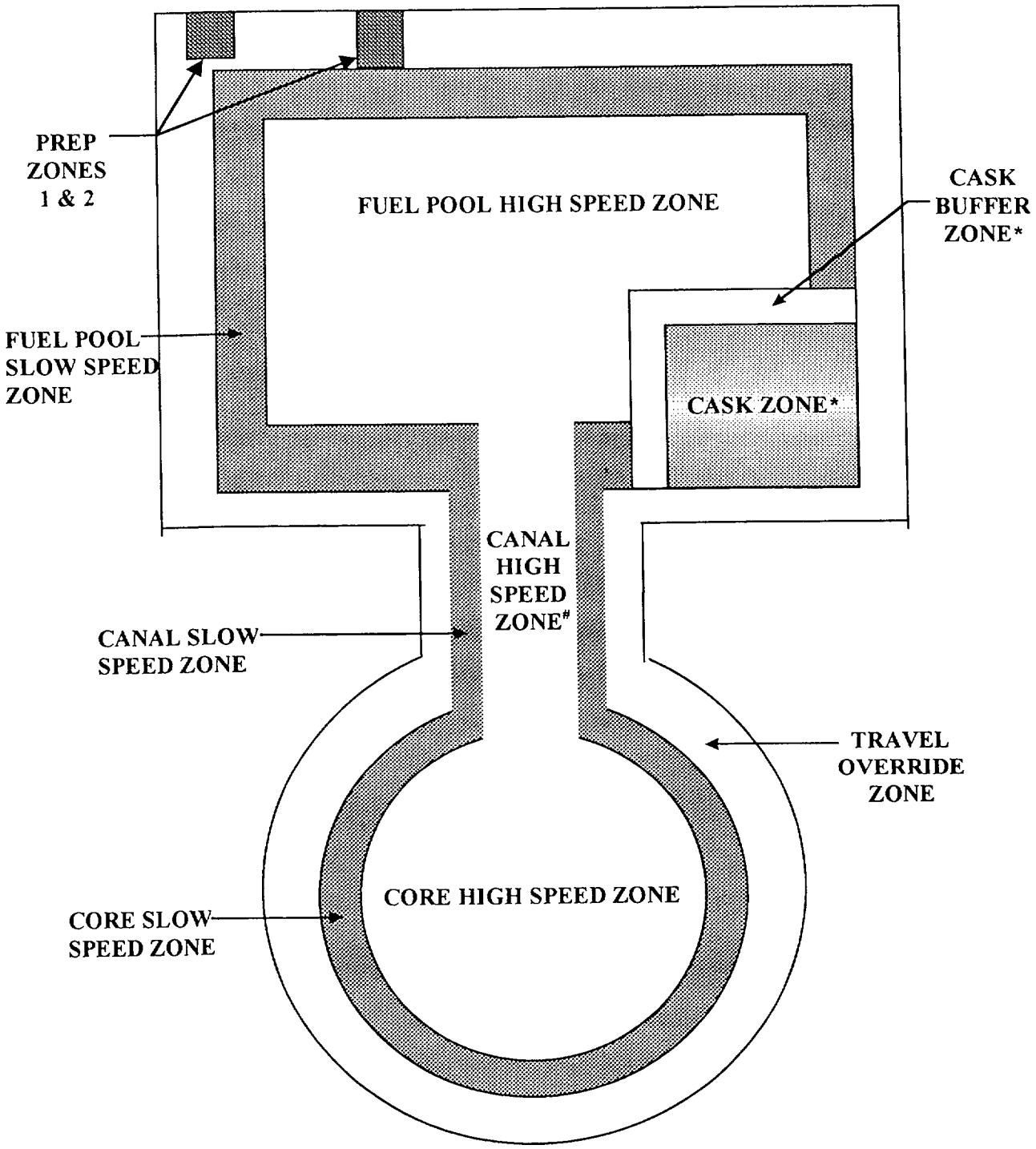

SECURE TRAVEL ZONE INCLUDES BOTH THE SLOW AND HIGH SPEED ZONES

*** IN EFFECT ONLY WHEN CASK LOADING NORMAL UP HAS BEEN SELECTED.**

 # APPLIES TO BRIDGE ONLY; TROLLEY OPERATES AT SLOW SPEED IN THIS ZONE

ATTACHMENT 8

MAIN HOIST SPEED ZONES

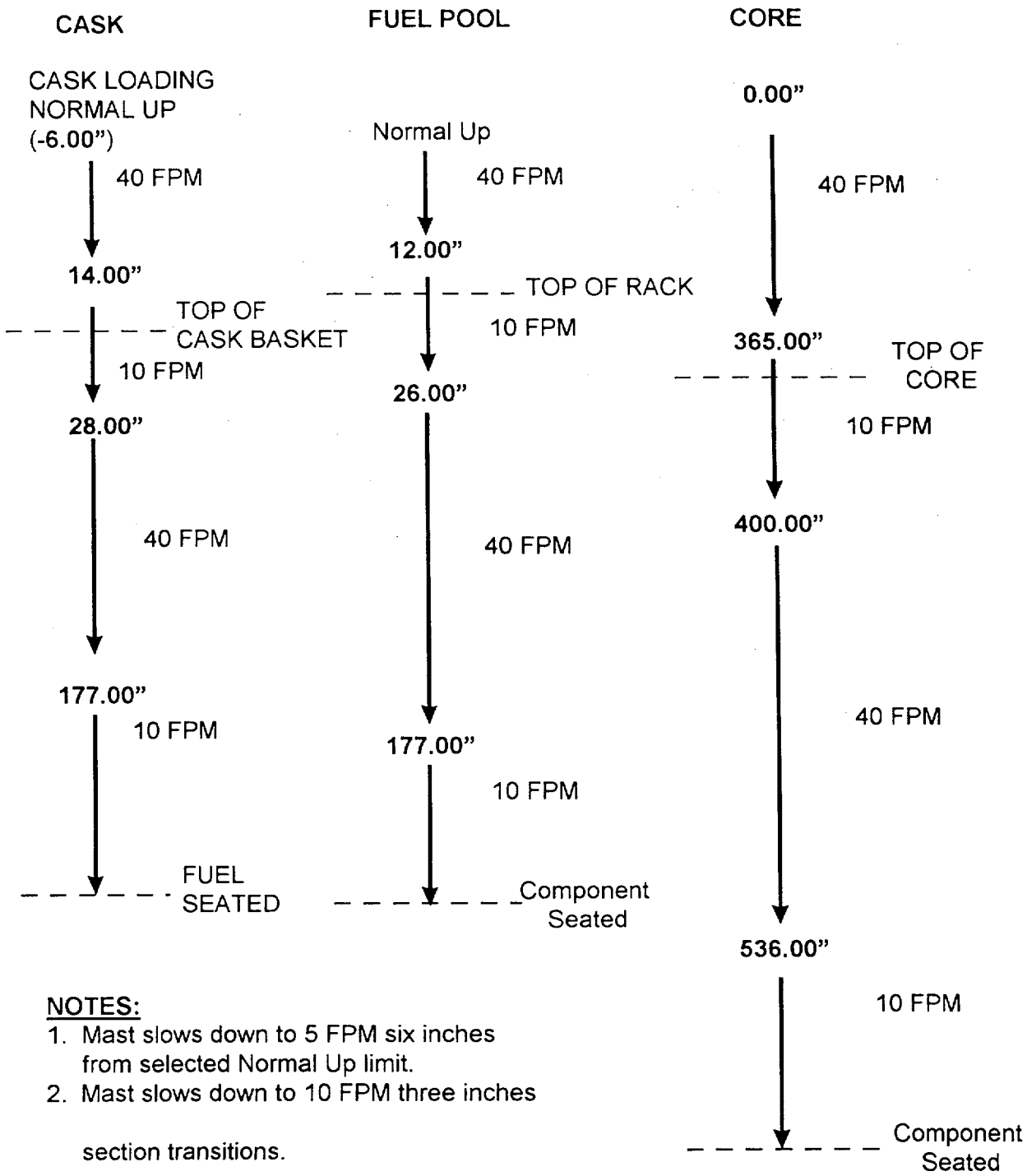

NOTES:
1. Mast slows down to 5 FPM six inches from selected Normal Up limit.
2. Mast slows down to 10 FPM three inches

section transitions.

All hoist speeds indicated are at maximum joystick deflection. Actual hoist speed for a given zone is variable up to the maximum, dependent on the amount of joystick deflection. All zones are approximate encoder readings

ATTACHMENT 9

HOIST ENCODER POSITION RANGES

	Range
Fuel or SBG* Entering Rack	17.0" - 19.0"
Fuel or SBG* Seated in Rack	186.5" - 188.5"
Fuel Entering Cask	17.5" - 19.5"
Fuel Seated in Cask	183.5" - 185.5"
Fuel or SBG* Entering Core	369.0" - 371.0"
Fuel or SBG* Seated in Core	548.0" - 550.0"
DBG** Entering Rack	11.5" - 13.5"
DBG** Seated in Rack	177.5" - 184.5"
DBG** Entering Core	367.0" - 369.0"
DBG** Seated in Core	543.7" - 548.7"
DBG** Stacked in Core	As determined acceptable by FHD
Bundle in FPM (Full Down)	166.5" - 168.5"
Bundle in FPM (Full Down with GE fuel inspection fixture installed)	159.2" - 161.2"
Bottom of Cask Pit	364.5" - 366.5"
Bundle Seated in Bundle Sipping Canister:_____ ID/Location	_____" - _____"
Bundle Seated in Bundle Sipping Canister:_____ ID/Location	_____" - _____"
Permissive for entrance into Transfer Canal with grapple open	< 164.00"
Permissive for entrance into Transfer Canal with grapple closed	Normal Up

* SBG = Single Blade Guide
** DBG = Double Blade Guide

FOR TRAINING PURPOSES ONLY

PECO Energy Company
Peach Bottom Unit 3

SO 18.1.A-3 OPERATION OF REFUELING PLATFORM

1.0 PURPOSE

This provides the instruction necessary to operate the Refueling Platform Main Hoist for core component and DUMMY fuel bundle movements within the Fuel Pool and Reactor Core. This procedure shall be used in conjunction with Fuel Handling Procedure FH-6C, "Core Component Movement - Core Transfers", or FH-35, "Control of Material Movement in the Fuel Pool" as appropriate.

2.0 PREREQUISITES

2.1 IF performing transfers in the Reactor, THEN all prerequisites included in Procedure FH-6C, "Core Component Movement - Core Transfers" have been completed as appropriate.

2.2 IF performing transfers in the Fuel Pool only, THEN all prerequisites included in Procedure FH-35, "Control of Material Movement in the Fuel Pool" have been completed as appropriate.

2.3 DUMMY fuel bundle movement shall be governed by FH-35 OR FH-6C.

2.4 Refuel Platform started up AND checked out in accordance with SO 18.1.C-3, "Electrical, Mechanical and Pneumatic Alignment/Checkout of Refueling Platform." The main hoist section of the Refueling Platform Preoperational Checkoff List should be performed over the Reactor Cavity as soon as possible after core is accessible. Performing the preoperational checks in the cavity will ensure the mast will lower to the core height without binding.

2.5 IF operating in Full Automatic OR Semi-Automatic modes, THEN both Primary AND Redundant Encoders are selected for each axis on the UTILITIES screen(Ref. 6.4).

2.6 IF performing movement to OR from a Spent Fuel Storage Cask, THEN Cask Loading Normal Up limit shall be selected, ~~OTHERWISE Refueling Normal Up limit shall be selected.~~

2.7 Attachment 9 of this procedure is posted on the Refueling Platform Mast.

3.0 PRECAUTIONS

3.1 WHEN operating equipment, IF it does NOT perform as expected, THEN place the equipment in a safe condition AND inform Shift Management or Fuel Handling Director(FHD).

3.2 Procedures SO 18.7.G-3, "Refueling Platform Overrides and Bypasses" and SO 18.7.F-3, "Handwheel Operation of Refueling Platform Bridge, Trolleys and Hoists" provide alternate methods for platform operation when the Refueling Platform is NOT performing as expected.

3.3 The monorail and frame mounted auxiliary hoist shall be full-up on hoist override with tools removed when not in use. Alternately, the tool and hoist cable may be stored in a safe location. Jam blocks shall be installed on aux hoist cables at all times.

3.4 Blade guides may be removed from the reactor core provided the associated control rod blade will be diagonally supported by fuel or other blade guide(s).

3.5 To prevent impact or mast/fuel assembly damage:

3.5.1 Trolley and Bridge shall always be accelerated AND decelerated slowly, avoiding sudden starts and stops.

3.5.2 Travel paths shall be clear before moving core components.

3.5.3 IF fuel OR a blade guide is grappled on the Main Hoist(grapple engaged), THEN "GRAPPLE NORMAL UP" light shall be lit before moving into Transfer Canal.

3.5.4 IF Main Hoist grapple is empty(grapple open), THEN Main Hoist position shall indicate less than 164 inches before moving into Transfer Canal.

3.5.5 Main Hoist grapple shall be in Normal Up position with "GRAPPLE NORMAL UP" light lit when not in use.

3.5.6 IF a core component is partially inserted into a location, THEN Bridge and Trolley shall only be moved using the TRAVERSE SYSTEM joystick for minor adjustments.

3.5.7 IF possible, observe channel fastener as it enters the core, fuel rack or sipping canister. To ensure channel fastener does NOT catch, push or pull mast assembly as required as bundle approaches fully seated position.

3.5.8 The following precautions apply when loading a fuel cask:

3.5.8.1 Top edge of cask fuel compartment could be damaged if impacted by a fuel bundle or weight of bundle is transferred to compartment. Use great care when aligning fuel bundle with cask opening.

3.5.8.1 Cask drain line protrudes into cask above the elevation of the fuel basket. Use great care when maneuvering bundles near the drain line as impacting drain line could cause fuel damage and/or drain line damage.

3.5.9 Use extreme caution and a slow hoist speed when handling unchanneled fuel bundles. Unchanneled bundles have the potential to twist and damage the bundle. Finger springs on the lower tie plate and fuel rod spacers may catch during bundle removal OR insertion.

3.6 Mast camera may impact surrounding structures when manipulating core components in the Reactor Core periphery, Fuel Pool periphery, Fuel Preparation Machine or Spent Fuel Storage Cask. Exercise caution to avoid impact damage.

3.7 IF during hoist operation:

3.7.1 "HOIST JAM" light comes on, THEN immediately stop and lower until "HOIST JAM" light goes out, THEN inform Fuel Handling Director for instruction.

3.7.2 "HOIST LOADED" light goes out prematurely, OR the load starts to lean, THEN:

3.7.2.1 Immediately stop lowering hoist.

3.7.2.2 Verify grapple switch is in "ENGAGE" position.

3.7.2.3 Verify "GRAPPLE ENGAGED" light is lit.

3.7.2.4 Slowly raise hoist to regain the weight of the load.

~~3.7.2.5 Inform Fuel Handling Director.~~

3.7.3 "GRAPPLE ENGAGED" light goes out unexpectedly during operation, THEN immediately stop and inform Fuel Handling Director

3.7.4 "HOIST LOADED" light comes on unexpectedly while raising grapple, THEN:

3.7.4.1 Immediately stop raising hoist.

3.7.4.2 Slowly lower hoist until "HOIST LOADED" light goes out.

3.7.4.3 Inform Fuel Handling Director.

3.7.5 "ROD BLK INTERLK #1" light does NOT light when refuel platform is over the core with the Main Hoist fuel loaded, THEN stop refuel platform operation AND inform Fuel Handling Director.

3.8 Fuel bundles may contact Control Rod Blades (CRB) at two elevations, approximately 385" and 400" hoist encoder position.

3.9 Prior to component handling concurrent with use of other unique equipment in the Reactor Cavity or Spent Fuel Pool, a determination should be made regarding the level of monitoring necessary to prevent contact between the equipment and the refuel platform mast, mast camera or core components suspended from the grapple.

Examples of unique equipment include in-vessel inspection or repair equipment, particularly those with umbilical cables. Depending on the risk of interference, consideration shall be given to positioning an individual on the refuel platform assigned the responsibility to monitor the position of the equipment (and umbilical if applicable) and alert Fuel Handling crew to STOP if interference is imminent.

3.10 If possible the fuel grapple shall be directly observed to be closed prior to lifting a load. Also check that the load's bail handle is inside the grapple head.

3.11 The RPO must NOT watch the hoist position indicator exclusively when a handled component is about to enter a designated location or when the empty grapple is approaching a seated component. The operator should observe component or grapple movement to avoid damage.

3.12 Peripheral fuel assemblies have a potential to miss their fuel support and seat low. Use extreme caution to maintain proper alignment while inserting assembly into the core.

3.13 Fuel bundles should be seated using a constant slow hoist speed while gently shaking the mast. Extreme slow speed and the absence of vibration increases the potential for bundles to require reseating.

3.14 Extra caution should be used when handling very old bundles. Careful monitoring of hoist load should be performed during lifting to ensure failure of bundle tie rods is promptly identified. In addition, channel fasteners AND bail handles have been found bent on old bundles which can lead to difficulty seating or releasing the bundle.(Reference 6.5)

3.15 Gentle rotation of the mast in both directions should be used prior to grapple engagement to ensure the fuel grapple is centered on the bail handle. Rapid or rough rotation during this check can lead to bundle damage, particularly when moving dechanneled fuel bundles(Reference 6.5).

3.16 The Refueling Platform shall be operated at the REFUELING PLATFORM OPERATOR access level unless specified otherwise in this OR other controlling procedures.

3.17 Power is removed from the cabinet air conditioners when a FAULT LOCKOUT occurs OR the STOP push button is depressed. This may cause a "CONSOLE HIGH TEMPERATURE" alarm.

3.18 Bridge speed is limited when the Main Hoist grapple is closed(engaged) AND the Main Hoist NOT fuel loaded. In this condition the PLC logic assumes there is a single or double blade guide on the Main Hoist and limits speed to prevent excessive drag loading on the mast(Ref. 6.6).

3.19 Prior to leaving the refueling platform temporarily unattended, the platform shall be positioned as directed by the FHD and the "STOP" push button depressed. Procedure SO 18.2.A-3, "Shutdown Of Refueling Platform", shall be performed for longer periods of shutdown(e.g. lunch hour, overnight, etc.).

3.20 IF Refueling Platform power needs to be temporarily interrupted (e.g., electrical blocking for emergent repairs OR transfer to/from alternate power supply), THEN perform computer shutdown section of SO 18.2.A-3, "Shutdown of Refueling Platform" prior to interrupting power.

3.21 Deenergizing the refueling platform while over the Reactor Cavity(track switches actuated) will generate a Rod Withdrawal Block in the Main Control Room. Notify Unit Reactor Operator prior to deenergizing the refueling platform with the track switches actuated.

3.22 The touch screen on the Operator Interface Console is required to be functional in order to change configuration of certain parameters(e.g., selection of Normal Up limit, selection of encoders for each axis, modification of Secure Travel Zone to recognize Fuel Pool Gate as removed or installed) and to operate in Semi-Automatic or Full Automatic modes. If all parameters are configured as required, the touch screen is NOT required to be functional for safe refueling platform operation in manual mode. Although the screen annunciator messages will NOT be available, the corresponding conditions will be evident via other visual or functional indications.

3.23 IF power to the PLC is interrupted while operating without a functional touch screen, THEN the Fuel Pool Gate status will default to "installed" when power is restored, preventing entrance into the Transfer Canal. The PLC will also default to the Refueling Normal Up limit when power is restored.

3.24 IF the message "COMMUNICATION TO THE PLC HAS BEEN LOST" is displayed on the touch screen meaning no further screen updates are possible, THEN refueling platform operation may continue in manual mode.

3.25 The OPERATOR INTERFACE CONSOLE AND SRO Station screens may be used as an alternate to the Right Hand OR Left Hand Controllers for verification of "SLACK CABLE", "HOIST LOADED", "GRAPPLE NORMAL UP" and "GRAPPLE ENGAGED" light status.

3.26 The keyboard AND/OR mouse stored in the OPERATOR INTERFACE CONSOLE may be connected to the front of the OPERATOR INTERFACE CONSOLE and used as an alternative to the "touch" function of the touch screen.

3.27 The computer slave screen at the SRO Station is for convenience and NOT required to be operational for Refueling Platform operation.

3.28 The Mast Orientation Interlock logic is NOT required to be functional for safe Refueling Platform operation. This optional feature is only active in Full Automatic mode and is a backup to the Double Verification by the FHD and RPO OR FHD and Spotter, which is the primary means of component orientation verification. Procedure SO 18.7.G-3, "Refueling Platform Overrides and Bypasses" provides instructions necessary to bypass the Mast Orientation Interlock logic if it is NOT performing as expected.

3.29 Attachments 1 through 4 summarize Refuel Platform interlocks and annunciators, including initiating conditions and effects on the system. Some of the screen annunciators provide suggested actions based on the initiating conditions. IF any annunciators appear unexpectedly, including those with suggested actions, THEN stop platform operation AND inform FHD prior to taking any action.

3.30 Touch screen annunciators with a pink background will bring up a popup information screen when touched. Touching "ACKNOWLEDGE" will close the popup screen.

3.31 Attachments 6 through 8 provide information regarding the Secure Travel Zone, Grapple Release Zone and bridge, trolley and hoist speed zones.

3.32 A CCTAS is not required for movement of the DUMMY fuel bundle.

4.0 PERFORMANCE STEPS

NOTES

1. The performance steps section of this procedure is separated into the following subsections:

   - o 4.1, Logging ON Computer
   - o 4.2, Change Person Logged ON Computer
   - o 4.3, Selection of Encoders for Bridge, Trolley and Hoist
   - o 4.4, Selection of Normal Up Limit
   - o 4.5, Loading Fuel Move Sequence From Shuffleworks
   - o 4.6, Semi-Automatic Operation
   - o 4.7, Full Automatic Operation
   - o 4.8, Pickup Location - Fuel Pool Storage Rack
   - o 4.9, Pickup Location - Reactor Core
   - o 4.10, Pickup Location - Fuel Preparation Machine
   - o 4.11, Pickup Location - Bundle Sipping Canister
   - o 4.12, Pickup Location - Spent Fuel Storage Cask
   - o 4.13, Set Down Location - Fuel Pool Storage Rack
   - o 4.14, Set Down Location - Reactor Core
   - o 4.15, Set Down Location - Fuel Preparation Machine
   - o 4.16, Set Down Location - Bundle Sipping Canister
   - o 4.17, Set Down Location - Spent Fuel Storage Cask

2. Perform applicable subsections of Section 4.0 at the direction of the FHD.

3. Refueling Platform operating mode(i.e. Manual, Semi-Automatic or Full Automatic) is NOT prescribed in the pickup/set down subsections of this procedure. Operating mode is at the discretion of the fuel handling crew.

4.1 Logging ON Computer

4.1.1 Touch "LOG ON" AND enter name.

4.1.2 IF incorrect name was entered, THEN touch "CHANGE NAME" AND enter name.

4.1.3 Touch "ENTER PASSWORD" AND enter password.

NOTE

Answering "YES" to the question "IS THE REFUELING GATE INSTALLED" modifies the Secure Travel Zone boundary to NOT allow entrance into the Transfer Canal.

4.1.4 At screen prompt "IS THE REFUELING GATE INSTALLED?", answer "YES" if either gate is installed OR "NO" if both gates are removed.

4.1.5 Verify proper access level is displayed.

4.1.6 Touch "PRESS FOR OPERATION" to display "MAIN" screen.

4.2 Change Person Logged ON Computer

4.2.1 Touch "SHOW MENU".

4.2.2 Touch "LOG OFF"

4.2.3 Touch "YES/LOG OFF".

4.2.4 New operator perform Section 4.1 of this procedure.

4.3 Selection of Encoders for Bridge, Trolley and Hoist

NOTE

This section can only be performed by personnel with FUEL HANDLING DIRECTOR access level OR higher.

4.3.1 Touch "SHOW MENU".

4.3.2 Touch "UTILITIES".

NOTE

Steps 4.3.3 through 4.3.5 apply to the Bridge, Trolley and Hoist encoders.

****
* CAUTION *
*
* Operation in Semi-Automatic OR Full Automatic modes *
* requires both Primary AND Redundant Encoders to be *
* selected(i.e. "0") for each axis in order to prevent *
* collision of the mast OR handled component in the event *
* a single encoder fails(Ref. 6.4). *
****

4.3.3 Touch screen button displaying current encoder selection for the axis to be set.

4.3.4 On the number pad enter desired encoder selection(i.e. "0", "1" OR "2").

4.3.5 Verify desired encoder selection is displayed on button.

4.3.6 Touch "RETURN TO OPERATION".

4.3.7 Perform Section 4.2 "Change Person Logged ON Computer" of this procedure to ensure operation at REFUELING PLATFORM OPERATOR access level.

4.4 Selection of Normal Up Limit

> NOTE
>
> This section can only be performed by personnel with FUEL HANDLING DIRECTOR access level OR higher.

4.4.1 Touch "SHOW MENU".

4.4.2 Touch "UTILITIES".

4.4.3 Touch "Refueling/Cask Loading" button to select appropriate Normal Up limit for the planned evolution.

4.4.4 Verify desired Normal Up Limit is displayed.

4.4.5 Touch "RETURN TO OPERATION".

4.4.6 Perform Section 4.2 "Change Person Logged ON Computer" of this procedure to ensure operation at REFUELING PLATFORM OPERATOR access level.

4.5 Loading Fuel Move Sequence From Shuffleworks

> NOTE
>
> This section can only be performed by personnel with FUEL HANDLING DIRECTOR access level OR higher.

4.5.1 Touch "SHOW MENU".

4.5.2 Touch "UTILITIES".

4.5.3 Touch "GO TO DATABASE".

4.5.4 Verify floppy disk containing the fuel move sequence has the appropriate approvals required by RE-C-40, "Core Component Transfer Authorization Sheet Generation and Administration".

4.5.5 At the OPERATOR INTERFACE CONSOLE insert the floppy disk into the computer.

4.5.6 Touch "LOAD NEW SEQUENCE FILE".

4.5.7 Select type of move sequence, i.e., SHUFFLE, OFFLOAD OR RELOAD.

4.5.8 WHEN the prompt appears "Is The New Sequence Disk in Drive A:\", THEN touch "YES".

4.5.9 WHEN file has completed loading from disk, THEN remove floppy disk.

4.5.10 Touch "Open Sequence File".

NOTE
The Shuffleworks file designates orientation as follows: 0 - NE 1 - SE 2 - SW 3 - NW

4.5.11 Verify a sample of steps against the paper copy Core Component Transfer Authorization Sheet(CCTAS).

4.5.12 Touch "Return To Control".

4.5.13 Touch "RETURN TO OPERATION".

4.5.14 Perform Section 4.2 "Change Person Logged ON Computer" of this procedure to ensure operation at REFUELING PLATFORM OPERATOR access level.

4.6 Semi-Automatic Operation

NOTES

1. The Refuel Platform computer does NOT recognize Fuel Pool Storage Rack locations outside the Secure Travel Zone, the Fuel Preparation Machines, Bundle Sipping Canisters OR Spent Fuel Storage Cask locations as valid locations for automatic moves.

2. An automatic move can be terminated at any time by performing one of the following:
   - o touching "AUTO STOP" on the MAIN OR HOIST screen
   - o deflecting any of the master joysticks
   - o depressing "STOP" push button on START/STOP STATION
   - o depressing "TRAVEL OVERRIDE" on RIGHT HAND CONTROLLER

****
* CAUTION *
*
* Operation in Semi-Automatic mode requires both Primary *
* AND Redundant Encoders to be selected for each axis in *
* order to prevent collision of the mast OR handled *
* component in the event a single encoder fails(Ref. 6.4). *
****

4.6.1 IF desired to change mode of multiple axis automatic operation, THEN perform the following; OTHERWISE continue with step 4.6.2:

4.6.1.1 Touch "SHOW MENU".

4.6.1.2 Touch "XY/XY&Z MODE ACTIVE" as necessary to select the desired mode of multiple axis automatic operation.

4.6.1.3 Touch "PRESS FOR OPERATION".

4.6.2 IF operating in the XY mode, THEN perform the following, OTHERWISE continue with step 4.6.3 of this procedure:

4.6.2.1 IF in the Fuel Pool AND grapple is released, THEN verify hoist position indicates less than 164 inches.

4.6.2.2 IF in the Fuel Pool AND grapple is engaged, THEN verify hoist is at Normal Up position.

4.6.2.3 IF above the core AND grapple is released AND the requested location will be in the core, THEN verify hoist position indicates less than 530 inches.

4.6.2.4 IF above the core AND grapple is released AND the requested location will be in the Fuel Pool, THEN verify hoist position indicates less than 164 inches.

4.6.2.5 IF above the core AND grapple is engaged AND the requested location will be in the core, THEN verify hoist position indicates less than 355 inches.

4.6.2.6 IF above the core AND grapple is engaged AND the requested location will be in the Fuel Pool, THEN verify hoist is at Normal Up position.

4.6.3 IF operating in the XY&Z mode, THEN perform the following, OTHERWISE continue with step 4.6.4 of this procedure:

4.6.3.1 IF in the Fuel Pool AND grapple is released, THEN verify hoist position indicates less than 164 inches.

4.6.3.2 IF in the Fuel Pool AND grapple is engaged, THEN verify hoist is at Normal Up position.

4.6.3.3 IF above the core AND grapple is released, THEN verify hoist position indicates less than 530 inches.

4.6.3.4 IF above the core AND grapple is engaged, THEN verify hoist position indicates less than 355 inches.

4.6.4 Verify Bridge AND Trolley are within the Secure Travel Zone.

4.6.5 Verify Bridge AND Trolley are NOT in the Transfer Canal.

4.6.6 Touch "SELECT AUTO" on the Main OR Hoist screens.

4.6.7 IF during auto move selection it is desired to return to manual operation, THEN touch "SELECT MANUAL", OTHERWISE continue with this procedure subsection.

4.6.8 Touch "Manual Step Selection Active"/ "Auto Step Selection Active" as necessary to select "Manual Step Selection Active".

4.6.9 Touch "REQUEST" AND enter the desired location on the keypad screen.

4.6.10 IF requested location is correct, THEN touch "VERIFY"; OTHERWISE return to step 4.6.9.

4.6.11 Touch "AUTO RUN" to initiate Refueling Platform movement.

4.7 Full Automatic Operation

NOTES

1. The Refuel Platform computer does NOT recognize Fuel Pool Storage Rack locations outside the Secure Travel Zone, the Fuel Preparation Machines, Bundle Sipping Canisters OR Spent Fuel Storage Cask locations as valid locations for automatic moves.

2. An automatic move can be terminated at any time by performing one of the following:
   - o touching "AUTO STOP" on the MAIN OR HOIST screen
   - o deflecting any of the master joysticks
   - o depressing "STOP" push button on START/STOP STATION
   - o depressing "TRAVEL OVERRIDE" on RIGHT HAND CONTROLLER

****
* CAUTION *
*
* Operation in Full Automatic mode requires both Primary *
* AND Redundant encoders to be selected for each axis *
* in order to prevent collision of the mast OR handled *
* component in the event a single encoder fails(Ref. 6.4). *
****

4.7.1 IF desired to change mode of multiple axis automatic operation, THEN perform the following; OTHERWISE continue with step 4.7.2:

4.7.1.1 Touch "SHOW MENU".

4.7.1.2 Touch "XY/XY&Z MODE ACTIVE" as necessary to select the desired mode of multiple axis automatic operation.

4.7.1.3 Touch "PRESS FOR OPERATION".

4.7.2 IF operating in the XY mode, THEN perform the following, OTHERWISE continue with step 4.7.3 of this procedure:

4.7.2.1 IF in the Fuel Pool AND grapple is released, THEN verify hoist position indicates less than 164 inches.

4.7.2.2 IF in the Fuel Pool AND grapple is engaged, THEN verify hoist is at Normal Up position.

4.7.2.3 IF above the core AND grapple is released AND the requested location will be in the core, THEN verify hoist position indicates less than 530 inches.

4.7.2.4 IF above the core AND grapple is released AND the requested location will be in the Fuel Pool, THEN verify hoist position indicates less than 164 inches.

4.7.2.5 IF above the core AND grapple is engaged AND the requested location will be in the core, THEN verify hoist position indicates less than 355 inches.

4.7.2.6 IF above the core AND grapple is engaged AND the requested location will be in the Fuel Pool, THEN verify hoist is at Normal Up position.

4.7.3 IF operating in the XY&Z mode, THEN perform the following, OTHERWISE continue with step 4.7.4 of this procedure:

4.7.3.1 IF in the Fuel Pool AND grapple is released, THEN verify hoist position indicates less than 164 inches.

4.7.3.2 IF in the Fuel Pool AND grapple is engaged, THEN verify hoist is at Normal Up position.

4.7.3.3 IF above the core AND grapple is released, THEN verify hoist position indicates less than 530 inches.

4.7.3.4 IF above the core AND grapple is engaged, THEN verify hoist position indicates less than 355 inches.

4.7.4 Verify Bridge AND Trolley are within the Secure Travel Zone.

4.7.5 Verify Bridge AND Trolley are NOT in the Transfer Canal.

4.7.6 Touch "SELECT AUTO" on the Main OR Hoist screens.

4.7.7 IF during auto move selection it is desired to return to manual operation, THEN touch "SELECT MANUAL", OTHERWISE continue with this procedure subsection.

4.7.8 Touch "Manual Step Selection Active"/ "Auto Step Selection Active" as necessary to select "Auto Step Selection Active".

> NOTE
>
> The selected portion(PICKUP/SETDOWN) of the auto move to be performed is highlighted in green on the MOVE INFORMATION section of the screen. The requested location along with its bridge and trolley coordinates are displayed in a box on the bottom of the screen.

4.7.9 IF it is desired to select a particular step in the move sequence, THEN touch "SELECT NEW STEP NUMBER" AND enter desired step on the keypad screen.

4.7.10 IF it is desired to increment to the SETDOWN portion of a step OR the PICKUP portion of the next step in the sequence, THEN touch "INCREMENT STEP".

4.7.11 IF requested location is correct, THEN touch "VERIFY"; OTHERWISE return to step 4.7.9.

4.7.12 Touch "AUTO RUN" to initiate Refueling Platform movement.

4.8 Pickup Location - Fuel Pool Storage Rack

4.8.1 Position Refuel Platform Mast over desired core component in accordance with Core Component Transfer Authorization Sheet (CCTAS).

4.8.2 Lower hoist until grapple is 6 to 12 inches above bail.

4.8.3 Verify grapple is open.

4.8.4 Rotate grapple as necessary to achieve grapple to bail alignment.

4.8.5 Slowly lower hoist until "SLACK CABLE" light is lit.

NOTE

Steps 4.8.6 through 4.8.9 shall be double verified by the Fuel Handling Director (FHD) and Refuel Platform Operator (RPO) OR Fuel Handling Director and Spotter.

4.8.6 Verify proper core component location and orientation.

4.8.7 Verify the following, THEN inform FHD of grapple position.

4.8.7.1 Grapple is centered over bail handle

4.8.7.2 Hoist position indication agrees with Attachment 9 for item seated in Fuel Pool Storage Rack.

4.8.8 WHEN directed by FHD, THEN engage grapple, AND verify "GRAPPLE ENGAGED" light is lit.

4.8.9 WHEN directed by FHD, THEN slowly raise load AND verify "HOIST LOADED" light is lit (fuel only).

NOTE

WHEN accessing storage locations outside the Secure Travel Zone, use of the TRAVEL OVERRIDE push button is required to raise the hoist. Hoist slow speed zone near Normal Up will NOT be active. IF the hoist is fuel loaded, THEN raise motion will stop automatically WHEN the selected Normal Up setpoint is reached. IF the hoist is NOT fuel loaded(empty or blade guide), THEN raise motion will NOT stop automatically WHEN the selected Normal Up setpoint is reached and must be stopped by releasing the hoist joystick. IF the joystick is NOT released, THEN the hoist will raise until the first Overhoist Backup switch stops upward motion.

4.8.10 Continue raising until grapple is fully raised, THEN verify "GRAPPLE NORMAL UP" light is lit.

4.8.11 Perform appropriate "Set Down Location" subsection of this procedure as directed by FHD.

4.9 Pickup Location - Reactor Core

4.9.1 Position Refuel Platform Mast over desired core component in accordance with Core Component Transfer Authorization Sheet (CCTAS).

4.9.2 Lower hoist until grapple is 6 to 12 inches above bail.

NOTES

1. While the bridge is over the core, the grapple will only open when it is within 1 foot of the top of a bail. If the grapple is opened in the Fuel Pool it will remain open while over the core until the GRAPPLE switch is placed in the "ENGAGE" position.

2. If the GRAPPLE switch is placed in the "RELEASE" position while the bridge is over the core but the grapple is NOT within 1 foot of the top of a bail, the grapple will remain closed and the "GRAPPLE RELEASED ALARM" will sound. If the grapple is moved to within 1 ft of the top of a bail the grapple will NOT open until the switch is first placed in the "ENGAGE" position and then placed in the "RELEASE" position.

4.9.3 Verify grapple is open.

4.9.4 Rotate grapple as necessary to achieve grapple to bail alignment.

4.9.5 Slowly lower hoist until "SLACK CABLE" light is lit.

NOTE

Steps 4.9.6 through 4.9.10 (except 4.9.9) shall be double verified by the FHD and RPO OR FHD and Spotter.

4.9.6 Verify proper core component location and orientation.

4.9.7 Verify the following, THEN inform FHD of grapple position.

4.9.7.1 Grapple is centered over bail handle.

4.9.7.2 Hoist position indication agrees with Attachment 9 for item seated in core.

4.9.8 WHEN directed by FHD, THEN engage grapple, AND verify "GRAPPLE ENGAGED" light is lit.

4.9.9 IF load is a Fuel Bundle, THEN FHD shall inform Unit Reactor Operator of pending fuel removal from the core.

4.9.10 WHEN directed by FHD, THEN slowly raise load AND verify "HOIST LOADED" light is lit (fuel only).

4.9.11 Continue raising until core component is clear of core.

4.9.11.1 Verify hoist position indicates less than 355.0 inches.

4.9.11.2 Verify item is clear of top guide.

4.9.12 IF load is a Fuel Bundle, THEN FHD shall inform Unit Reactor Operator fuel bundle has cleared core.

4.9.13 IF load is to be transferred through Transfer Canal, THEN continue raising until grapple is fully raised AND verify "GRAPPLE NORMAL UP" light is lit.

4.9.14 Perform appropriate "Set Down Location" subsection of this procedure as directed by FHD.

4.10 Pickup Location - Fuel Preparation Machine

4.10.1 Verify Fuel Prep Machine carriage is fully lowered.

4.10.2 Position Refuel Platform Mast over fuel prep machine in accordance with Core Component Transfer Authorization Sheet (CCTAS).

4.10.3 Lower hoist until grapple is 6 to 12 inches above bail.

4.10.4 Verify grapple is open.

4.10.5 Rotate grapple as necessary to achieve grapple to bail alignment.

4.10.6 Slowly lower hoist until "SLACK CABLE" light is lit.

NOTE

Steps 4.10.7 through 4.10.10 shall be double verified by the FHD and RPO OR FHD and Spotter.

4.10.7 Verify proper core component location and orientation.

4.10.8 Verify the following, THEN inform FHD of grapple position.

4.10.8.1 Grapple is centered over bail handle

4.10.8.2 Hoist position indication agrees with Attachment 9 for item seated in fuel prep machine.

4.10.9 WHEN directed by FHD, THEN engage grapple, AND verify "GRAPPLE ENGAGED" light is lit.

4.10.10 WHEN directed by FHD, THEN slowly raise load AND verify "HOIST LOADED" light is lit (fuel only).

4.10.11 Continue raising until grapple is fully raised, THEN verify "GRAPPLE NORMAL UP" light is lit.

****
* CAUTION *
*
* Automatic modes shall NOT be used to perform moves while *
* mast is in a fuel preparation machine. *
****

4.10.12 Perform appropriate "Set Down Location" subsection of this procedure as directed by FHD.

4.11 Pickup Location - Bundle Sipping Canister

4.11.1 Verify Bundle Sipping Canister lid is open.

4.11.2 Position Refuel Platform Mast over desired Bundle Sipping Canister in accordance with Core Component Transfer Authorization Sheet (CCTAS).

4.11.3 Lower hoist until grapple is 6 to 12 inches above bail.

4.11.4 Verify grapple is open.

4.11.5 Rotate grapple as necessary to achieve grapple to bail alignment.

4.11.6 Slowly lower hoist until "SLACK CABLE" light is lit.

NOTES

1. Steps 4.11.7 through 4.11.10 shall be double verified by the FHD and RPO OR FHD and Spotter.

2. Expected hoist position is determined AND recorded on Attachment 9 by use of dummy bundle per Section 4.16.

~~4.11.7 Verify proper core component location and~~ orientation.

4.11.8 Verify the following, THEN inform FHD of grapple position.

4.11.8.1 Grapple is centered over bail handle

4.11.8.2 Hoist position indication agrees with value posted on Attachment 9 for sipping canister in use.

4.11.9 WHEN directed by FHD, THEN engage grapple AND verify "GRAPPLE ENGAGED" light is lit.

```
*****************************************************************
*                          CAUTION                              *
*                                                               *
*     Use extreme care to avoid collision of fuel bundle        *
*     with open Sipping Canister lid.                           *
*****************************************************************
```

4.11.10 WHEN directed by FHD, THEN slowly raise load AND verify "HOIST LOADED" light is lit (fuel only).

4.11.11 Continue raising until grapple is fully raised, THEN verify "GRAPPLE NORMAL UP" light is lit.

4.11.12 Perform appropriate "Set Down Location" subsection of this procedure as directed by FHD.

4.12 Pickup Location - Spent Fuel Storage Cask

4.12.1 Position Refuel Platform Mast over desired core component in accordance with Core Component Transfer Authorization Sheet (CCTAS).

4.12.2 Lower hoist until grapple is 6 to 12 inches above bail.

4.12.3 Verify grapple is open.

4.12.4 Rotate grapple as necessary to achieve grapple to bail alignment.

4.12.5 Slowly lower hoist until "SLACK CABLE" light is lit.

NOTE

Steps 4.12.6 through 4.12.9 shall be double verified by the FHD and RPO OR FHD and Spotter.

4.12.6 Verify proper core component location and orientation.

4.12.7 Verify the following, THEN inform FHD of grapple position.

4.12.7.1 Grapple is centered over bail handle.

4.12.7.2 Hoist position indication agrees with Attachment 9 for item seated in Cask.

4.12.8 WHEN directed by FHD, THEN engage grapple, AND verify "GRAPPLE ENGAGED" light is lit.

4.12.9 WHEN directed by FHD, THEN slowly raise load AND verify "HOIST LOADED" light is lit.

4.12.10 Continue raising until grapple is fully raised, THEN verify "GRAPPLE NORMAL UP" light is lit.

4.12.11 Perform appropriate "Set Down Location" subsection of this procedure as directed by FHD.

4.13 Set Down Location - Fuel Pool Storage Rack

4.13.1 Position core component over desired location in accordance with Core Component Transfer Authorization Sheet (CCTAS).

4.13.2 Rotate core component as necessary to achieve proper orientation.

4.13.3 Perform Double Verification to ensure proper core component location and orientation.

NOTES

1. Tooling may be utilized as necessary to guide a bent channel fastener into the spent fuel rack.

2. WHEN accessing storage locations outside the Secure Travel Zone, THEN use of the TRAVEL OVERRIDE push button is required to lower OR raise the hoist. Hoist slow speed zones near rack entrance, seating AND Normal Up will NOT be active.

4.13.4 WHEN directed by FHD, THEN lower load until "SLACK CABLE" light is lit.

NOTE

Steps 4.13.5 through 4.13.7 shall be double verified by the FHD and RPO OR FHD and Spotter.

4.13.5 Verify the following, THEN inform FHD of grapple position.

4.13.5.1 Component elevation appears equivalent to other stored components in the rack.

4.13.5.2 Hoist position indication agrees with Attachment 9 for item seated in Fuel Pool Storage Rack.

4.13.6 WHEN directed by FHD, THEN release grapple, AND verify grapple is open.

4.13.7 Slowly raise hoist while verifying "HOIST LOADED" light remains OFF.

4.13.8 Record completion of component transfer on CCTAS.

4.14 Set Down Location - Reactor Core

4.14.1 Position core component over desired location in accordance with Core Component Transfer Authorization Sheet (CCTAS).

4.14.2 Lower load until hoist position indicates approximately 355 inches, THEN stop lowering.

4.14.3 Rotate core component as necessary to achieve proper orientation.

4.14.4 Perform Double Verification to ensure proper core component location and orientation.

4.14.5 IF load is a fuel bundle, THEN FHD shall inform Unit Reactor Operator of pending fuel insertion in core.

NOTE

Fuel bundle may contact CRBs at two elevations approximately 385 inches and 400 inches hoist encoder position.

4.14.6 WHEN directed by FHD, THEN lower load until "SLACK CABLE" light is lit.

NOTE

Steps 4.14.7 through 4.14.9 shall be double verified by the FHD and RPO OR FHD and Spotter.

4.14.7 Verify the following, THEN inform FHD of grapple position.

4.14.7.1 Component elevation appears equivalent to other components in the Reactor Core.

4.14.7.2 Hoist position indication agrees with Attachment 9 for item seated in Reactor Core.

4.14.8 WHEN directed by FHD, THEN release grapple, AND verify grapple is open.

4.14.9 Slowly raise hoist while verifying "HOIST LOADED" light remains OFF.

4.14.10 Record completion of component transfer on CCTAS.

4.14.11 IF load was a fuel bundle, THEN FHD shall inform Unit Reactor Operator of completion of fuel insertion in core.

4.15 Set Down Location - Fuel Preparation Machine

4.15.1 Verify Fuel Prep Machine carriage is fully lowered.

4.15.2 Position component over desired fuel prep machine in accordance with Core Component Transfer Authorization Sheet (CCTAS).

4.15.3 Rotate core component as necessary to achieve proper orientation.

4.15.4 Perform Double Verification to ensure proper core component location and orientation.

4.15.5 WHEN directed by FHD, THEN lower load until "SLACK CABLE" light is lit.

NOTE

Steps 4.15.6 through 4.15.8 shall be double verified by the FHD and RPO OR FHD and Spotter.

4.15.6 Verify Hoist position indication agrees with Attachment 9 for item seated in fuel prep machine, THEN inform FHD of grapple position.

4.15.7 WHEN directed by FHD, THEN release grapple, AND verify grapple is open.

4.15.8 Slowly raise hoist while verifying "HOIST LOADED" light remains OFF.

4.15.9 Record completion of component transfer on CCTAS.

4.16 Set Down Location - Bundle Sipping Canister

****
* CAUTION *
*
* Use extreme care to avoid collision of fuel bundle *
* with open Sipping Canister lid. *
****

4.16.1 Verify Bundle Sipping Canister lid is open.

NOTE

The following step determines the expected hoist position for use of sipping canisters. It shall be performed one time for each sipping canister to be used. Reactor Engineering can provide information on dummy bundle location.

4.16.2 Obtain and record hoist position of bundle seated in sipping canister.

4.16.2.1 Fuel Handling Director and Refuel Platform Operator or Spotter, verify DUMMY fuel bundle location.

4.16.2.2 Grapple and raise DUMMY bundle in accordance with Section 4.8.

4.16.2.3 Position DUMMY bundle over sipping canister and rotate bundle to achieve alignment.

4.16.2.4 WHEN directed by FHD, THEN slowly lower load until "SLACK CABLE" light is lit.

4.16.2.5 Using underwater camera, verify bundle is fully seated in sipping canister.

> NOTE
>
> The range(target hoist position) for a fuel bundle seated in a Bundle Sipping Canister(refer to Attachment 9) is calculated by subtracting 1.5 inches from, AND adding 0.5 inches to, the hoist position indication obtained below.

4.16.2.6 Record hoist position AND calculate the range for each Bundle Sipping Canister below:

SIPPING CANISTER ID/ LOCATION	HOIST POSITION INDICATION	RANGE
1. _____	_____	_____-_____
2. _____	_____	_____-_____

4.16.2.7 Perform appropriate steps in Sections 4.11 and 4.13 to store DUMMY bundle in Fuel Pool Storage Rack location in AS-FOUND position.

4.16.2.8 Record the ID/Location AND Range for each Sipping Canister on the copy of Attachment 9 posted on the Refueling Platform mast.

4.16.3 Position fuel bundle over desired bundle sipping canister in accordance with Core Component Transfer Authorization Sheet (CCTAS).

4.16.4 Rotate fuel bundle as necessary to achieve proper insertion alignment.

4.16.5 Perform Double Verification to ensure proper core component location and orientation.

4.16.6 WHEN directed by FHD, THEN lower load until "SLACK CABLE" light is lit.

NOTE

Steps 4.16.7 through 4.16.9 shall be double verified by the FHD and RPO OR FHD and Spotter.

4.16.7 Verify the following, THEN inform FHD of grapple position.

4.16.7.1 Fuel Bundle is fully seated in the Bundle Sipping Canister

4.16.7.2 Hoist position indication agrees with value posted on Attachment 9 for sipping canister in use.

4.16.8 WHEN directed by FHD, THEN release grapple, AND verify grapple is open.

4.16.9 Slowly raise hoist while verifying "HOIST LOADED" light remains OFF.

4.16.10 Record completion of component transfer on CCTAS.

4.17 Set Down Location - Spent Fuel Storage Cask

4.17.1 Position core component over desired location in accordance with Core Component Transfer Authorization Sheet(CCTAS).

4.17.2 Lower load until hoist indicates approximately 10 inches, THEN stop lowering.

4.17.3 Rotate core component as necessary to achieve proper orientation.

4.17.4 Perform double verification to ensure proper core component location AND orientation.

4.17.5 WHEN directed by FHD, THEN lower load until "SLACK CABLE" light is lit.

NOTE

Steps 4.17.6 through 4.17.8 shall be double verified by the FHD and RPO OR FHD and Spotter.

4.17.6 Verify the following, THEN inform FHD of grapple position.

4.17.6.1 Component elevation appears equivalent to other stored components in the cask.

4.17.6.2 Hoist position indication agrees with Attachment 9 for an item seated in cask.

4.17.7 WHEN directed by FHD, THEN release grapple AND verify grapple is open.

4.17.8 Slowly raise hoist while verifying "HOIST LOADED" light remains OFF.

4.17.9 Record completion of component transfer on CCTAS.

5.0 CONTROL STATIONS

5.1 30C950A, "U/3 Refueling Platform Left Hand Controller"

5.2 30C950B, "U/3 Refueling Platform Right Hand Controller"

5.3 HS-3-18-30S006, "U/3 Refueling Platform Start/Stop Station"

5.4 XC-90832 "U/3 Refueling Platform Operator Interface Console"

6.0 REFERENCES

6.1 M-1-M-765, U/3 GE Refueling Platform Instruction Manual Volume I

6.2 326-P-VC-38, 39, 45, PBAPS Refueling Platform Instruction Manual Units 2 and 3

6.3 PECO Fuel Handling (FH) Procedures

6.4 10CFR50.59 Safety Evaluation for MOD P00758 Refueling Platform Controls Upgrade(ECR 98-02407)

6.5 INPO OE 7535, Failed Fuel Bundle at Oyster Creek

6.6 SIL 594, "Refuel Platform Triangular Mast Drag Loading"

6.7 ECR PB 98-02621, MOD P00758 Refueling Platform Controls Upgrade

6.8 ECR PB 99-00352, Modify Refueling Interlocks to Eliminate Main Hoist Not Normal Up Interlock

6.9 AR A1238197e01, Mod P758 Procedure Strategy Notes for SO 18.1.A-2(3)

6.10 ECR PB 01-00600, Addition of Fuel-Loaded Input to Fuel Hoist Interlock Logic - Unit 3

7.0 TECHNICAL SPECIFICATION

7.1 Section 3.9.1

8.0 INTERFACING PROCEDURES

8.1 FH-6C, "Core Component Movement - Core Transfers"

8.2 FH-35, "Control of Material Movement in the Fuel Pool"

8.3 RE-C-40, "Core Component Transfer Authorization Sheet Generation and Administration"

8.4 SO 18.1.C-3, "Electrical, Mechanical and Pneumatic Alignment/Checkout of Refueling Platform"

8.5 SO 18.2.A-3, "Shutdown of Refueling Platform"

8.6 SO 18.7.G-3, "Refueling Platform Overrides and Bypasses"

8.7 SO 18.7.F-3, "Handwheel Operation of Refueling Platform Bridge, Trolleys and Hoists"

9.0 ATTACHMENTS

1. Interlock Status Display Annunciators
2. Main Screen Annunciators
3. Hoist Screen Annunciators
4. Auto Screen Annunciators
5. Hoist Condition By Elevation
6. Secure Travel Zone Description
7. Bridge And Trolley Zone Enforcement
8. Main Hoist Speed Zones
9. Hoist Encoder Position Ranges

ATTACHMENT 1

INTERLOCK STATUS DISPLAY ANNUNCIATORS

ANNUNCIATOR	INITIATING CONDITIONS	EFFECT ON OPERATIONS
ROD BLK INTERLK #1 (ROD BLOCK INTERLOCK #1)	BRIDGE NEAR OR OVER CORE AND ANY HOIST FUEL LOADED (See Note)	CONTROL ROD WITHDRAWAL BLOCK (RMCS), ROD WITHDRAW BLOCK ANNUNCIATOR - MCR, WHITE WITHDRAW PERMIT LIGHT OFF - MCR
BRIDGE REVERSE STOP #1	BRIDGE NEAR OR OVER CORE AND ANY HOIST FUEL LOADED AND NOT ALL RODS FULL IN	NO BRIDGE REVERSE MOTION
ROD BLK INTERLK #2 (ROD BLOCK INTERLOCK #2)	BRIDGE NEAR OR OVER CORE AND RX MODE SW NOT IN REFUEL OR ROD NOT SELECTED	CONTROL ROD WITHDRAWAL BLOCK (RMCS), ROD WITHDRAW BLOCK ANNUNCIATOR - MCR, WHITE WITHDRAW PERMIT LIGHT OFF - MCR
BRIDGE REVERSE STOP #2		NO BRIDGE REVERSE MOTION
FUEL HOIST INTERLK (FUEL HOIST INTERLOCK)	BRIDGE NEAR OR OVER CORE AND MAIN HOIST FUEL LOADED AND NOT ALL RODS FULL IN	MAIN HOIST INOPERATIVE
MONO HOIST INTERLK (MONO HOIST INTERLOCK)	BRIDGE NEAR OR OVER CORE AND NOT ALL RODS FULL IN AND APPLICABLE HOIST FUEL LOADED	MONO AUX HOIST INOPERATIVE
FRAME HOIST INTERLK (FRAME HOIST INTERLOCK)		FRAME AUX HOIST INOPERATIVE
FAULT LOCKOUT	MOTOR THERMAL OL - HOIST, BRIDGE, TROLLEY OPER CHECK TIMER - HOIST, BRIDGE, TROLLEY MOTOR DRIVE FAULT - HOIST, BRIDGE, TROLLEY ENCODER COMPARE ERROR - HOIST, BRIDGE, TROLLEY MAIN HOIST OVERSPEED PHASE LOSS MAIN CONTROL POWER OFF CABINET DOOR OPEN ON TROLLEY DECK VARIABLE SPEED SWITCHES NOT IN NEUTRAL DURING STARTUP	BRIDGE WILL NOT OPERATE NO BRIDGE, TROLLEY, HOIST MOTION GRAPPLES FAIL CLOSED
TEST IN PROG (TEST IN PROGRESS)	TEST BOX CONNECTED OR TESTING SCREEN ACTIVE	VARIABLE - DEPENDS ON TEST BUTTON POSITION
BACKUP HOIST LIMIT	MAIN HOIST TRAVEL TO APPROX. 1" ABOVE CASK LOADING NORMAL UP (OVERHOIST BACKUP SWITCH #1) OR APPROX. 11" ABOVE CASK LOADING NORMAL UP (OVERHOIST BACKUP SWITCH #2)	FURTHER MAIN HOIST RAISING PROHIBITED

NOTE: Depressing "STOP" push button with bridge near or over the core will also initiate a Rod Block Interlock #1.

ATTACHMENT 2

MAIN SCREEN ANNUNCIATORS

ANNUNCIATOR	INITIATING CONDITIONS	EFFECT ON OPERATIONS
TRAVEL OVERRIDE ACTIVATED (flashing)	TRAVEL OVERRIDE button activated	Bridge/Trolley/Hoist motion permitted at slow speed
SAFETY TRAVEL INTERLOCK	Bridge/Trolley outside Secure Travel Zone	NO Bridge/Trolley/Hoist motion
PLC OVERRIDE ACTIVE	PLC/COMPUTER OVERRIDE key switch in OVERRIDE position	All PLC functions/interlocks bypassed. Bridge/Trolley/Hoist motion at slow speed.
3" MOTION INTERLOCK HAS BEEN EXCEEDED	Bridge AND/OR Trolley moved more than 3" with the hoist lowered during component insertion	NO further motion in offending direction [TRAVEL OVERRIDE can be used to realign the Bridge/Trolley]
PHASE LOSS DETECTED	Loss of one OR more phases of incoming 480V power	NO Bridge/Trolley/Hoist motion (Will also result in a FAULT LOCKOUT)
CONSOLE TEMPERATURE ALARM	High temperature in the Trolley Control Cabinet, Trolley PLC Cabinet, OR Operator Interface Console	None - alarm only
FAULT OVERRIDE KEYSWITCH ACTIVATED (flashing)	FAULT OVERRIDE key switch turned to OVERRIDE position	Fault Lockout circuit bypassed. Fault conditions will NOT be annunciated via a FAULT LOCKOUT. However, FAULT CONDITION OVERRIDDEN annunciator will appear when a fault condition occurs.
FAULT CONDITION OVERRIDDEN	FAULT OVERRIDE key switch turned to OVERRIDE position concurrent with a valid Fault condition	Fault Lockout circuit bypassed. New fault conditions will NOT be annunciated.
SECURE TRAVEL ZONE BYPASSED (flashing)	Secure Travel Zone bypassed on UTILITIES screen	NO Secure Travel Zone enforcement
A PLC I/O FAULT HAS BEEN DETECTED	A PLC I/O module is NOT responding to commands from the CPU, OR the PLC configuration file detects a module has been removed	Variable - depends on the affected module
COMMUNICATION TO THE PLC HAS BEEN LOST	Loss of communication between the PC AND the PLC	NO further screen updates [Refueling Platform operation may continue in manual mode]
HOIST IS LOADED AND NOT AT THE CASK LOADING UP LIMIT	Bridge AND/OR trolley attempting to enter the Cask Zone when fuel loaded AND NOT at the Cask Loading Normal Up limit with Cask Loading Up Limit selected	NO Bridge/Trolley/Hoist motion

ATTACHMENT 2(cont.)

MAIN SCREEN ANNUNCIATORS

ANNUNCIATOR	INITIATING CONDITIONS	EFFECT ON OPERATIONS
ROD BLOCK INTERLOCK #1	BRIDGE NEAR OR OVER CORE AND ANY HOIST FUEL LOADED	CONTROL ROD WITHDRAWAL BLOCK (RMCS), ROD WITHDRAW BLOCK ANNUNCIATOR - MCR, WHITE WITHDRAW PERMIT LIGHT OFF - MCR
BRIDGE REVERSE STOP #1	BRIDGE NEAR OR OVER CORE AND ANY HOIST FUEL LOADED AND NOT ALL RODS FULL IN	NO BRIDGE REVERSE MOTION
ROD BLOCK INTERLOCK #2	BRIDGE NEAR OR OVER CORE AND RX MODE SW NOT IN REFUEL OR ROD NOT SELECTED	CONTROL ROD WITHDRAWAL BLOCK (RMCS), ROD WITHDRAW BLOCK ANNUNCIATOR - MCR, WHITE WITHDRAW PERMIT LIGHT OFF - MCR
BRIDGE REVERSE STOP #2	BRIDGE NEAR OR OVER CORE AND RX MODE SW NOT IN REFUEL OR ROD NOT SELECTED	NO BRIDGE REVERSE MOTION
FUEL HOIST INTERLOCK	BRIDGE NEAR OR OVER CORE AND MAIN HOIST FUEL LOADED AND NOT ALL RODS FULL IN	MAIN HOIST INOPERATIVE
MONO HOIST INTERLOCK	BRIDGE NEAR OR OVER CORE AND NOT ALL RODS FULL IN AND MONO HOIST FUEL LOADED	MONO AUX HOIST INOPERATIVE
FRAME HOIST INTERLOCK	BRIDGE NEAR OR OVER CORE AND NOT ALL RODS FULL IN AND FRAME HOIST FUEL LOADED	FRAME AUX HOIST INOPERATIVE
FAULT DETECTED	MOTOR THERMAL OL - HOIST, BRIDGE, TROLLEY OPER CHECK TIMER - HOIST, BRIDGE, TROLLEY MOTOR DRIVE FAULT - HOIST, BRIDGE, TROLLEY ENCODER COMPARE ERROR - HOIST, BRIDGE, TROLLEY MAIN HOIST OVERSPEED PHASE LOSS MAIN CONTROL POWER OFF CABINET DOOR OPEN ON TROLLEY DECK VARIABLE SPEED SWITCHES NOT IN NEUTRAL DURING STARTUP	BRIDGE WILL NOT OPERATE NO BRIDGE, TROLLEY, HOIST MOTION GRAPPLES FAIL CLOSED

ATTACHMENT 3

HOIST SCREEN ANNUNCIATORS

Annunciator	Initiating Conditions	Effect on Operations
TRAVEL OVERRIDE ACTIVATED (flashing)	TRAVEL OVERRIDE button activated	Bridge/Trolley/Hoist motion permitted at slow speed
SAFETY TRAVEL INTERLOCK	Bridge/Trolley outside Secure Travel Zone	NO Bridge/Trolley/Hoist motion
PLC OVERRIDE ACTIVE	PLC/COMPUTER OVERRIDE key switch in OVERRIDE position	All PLC functions/interlocks bypassed. Bridge/Trolley/Hoist motion at slow speed.
3" MOTION INTERLOCK HAS BEEN EXCEEDED	Bridge AND/OR Trolley moved more than 3" with the hoist lowered during component insertion	NO further motion in offending direction [TRAVEL OVERRIDE can be used to realign Bridge/Trolley]
PHASE LOSS DETECTED	Loss of one OR more phases of incoming 480V power	NO Bridge/Trolley/Hoist motion (Will also result in a FAULT LOCKOUT)
CONSOLE TEMPERATURE ALARM	High temperature in the Trolley Control Cabinet, Trolley PLC Cabinet, OR Operator Interface Console	None - alarm only
FAULT OVERRIDE KEYSWITCH ACTIVATED (flashing)	FAULT OVERRIDE key switch turned to OVERRIDE position	Fault Lockout circuit bypassed. Fault conditions will NOT be annunciated via a FAULT LOCKOUT. However, FAULT CONDITION OVERRIDDEN annunciator will appear when a fault condition occurs.
FAULT CONDITION OVERRIDDEN	FAULT OVERRIDE key switch turned to OVERRIDE position concurrent with a valid Fault condition	Fault Lockout circuit bypassed. New fault conditions will not be annunciated.
HOIST NOT IN PERMISSIVE ZONE	Hoist outside Secure Travel Zone	NO Hoist motion. NO Bridge/Trolley motion in offending direction.
SECURE TRAVEL ZONE BYPASSED (flashing)	Secure Travel Zone bypassed on UTILITIES screen	NO Secure Travel Zone enforcement
A PLC I/O FAULT HAS BEEN DETECTED	A PLC I/O module is NOT responding to commands from the CPU, OR the PLC configuration file detects a module has been removed	Variable - depends on the affected module
ROD BLOCK INTERLOCK #1	BRIDGE NEAR OR OVER CORE AND ANY HOIST FUEL LOADED	CONTROL ROD WITHDRAWAL BLOCK (RMCS), ROD WITHDRAW BLOCK ANNUNCIATOR - MCR, WHITE WITHDRAW PERMIT LIGHT OFF - MCR
BRIDGE REVERSE STOP #1	BRIDGE NEAR OR OVER CORE AND ANY HOIST FUEL LOADED AND NOT ALL RODS FULL IN	NO BRIDGE REVERSE MOTION
ROD BLOCK INTERLOCK #2	BRIDGE NEAR OR OVER CORE AND RX MODE SW NOT IN REFUEL OR ROD NOT SELECTED	CONTROL ROD WITHDRAWAL BLOCK (RMCS), ROD WITHDRAW BLOCK ANNUNCIATOR - MCR, WHITE WITHDRAW PERMIT LIGHT OFF - MCR
COMMUNICATION TO THE PLC HAS BEEN LOST	Loss of communication between the PC AND the PLC	NO further screen updates [Refueling Platform operation may continue in manual mode]

ATTACHMENT 3(Cont.)

HOIST SCREEN ANNUNCIATORS

Annunciator	Initiating Conditions	Effect on Operations
HOIST IS LOADED AND NOT AT THE CASK LOADING UP LIMIT	Bridge AND/OR trolley attempting to enter the Cask Zone when fuel loaded AND NOT at the Cask Loading Normal Up limit with Cask Loading Up Limit selected	NO Bridge/Trolley/Hoist motion
THERE IS A CONFLICT BETWEEN THE PLC AND EXTERNAL FUEL HOIST LOADED CONDITIONS	Set point module SP-MHL indicates main hoist is fuel loaded and analog load input to PLC indicates NOT fuel loaded, OR vice-versa	None [Evaluate operability of refueling interlocks]
GRAPPLE RELEASE INTERLOCK	Grapple switch in release position AND 1) main hoist fuel loaded, OR 2) hoist NOT within 12" of fuel seated in the core	Main hoist grapple will NOT release; GRAPPLE RELEASED ALARM will sound on Right Hand Controller.
HOIST RAISE LOCKOUT	Main hoist fuel loaded AND grapple limit switches indicate grapple open	NO main hoist raise motion
MAST ORIENTATION CONFLICT	Mast NOT oriented correctly based on fuel move sequence file AND mast orientation during component pickup, with hoist below Mast Orientation Interlock active elevation	NO main hoist lower motion
MAST ORIENTATION INTERLOCK IS BYPASSED	MAST ORIENTATION INTERLOCK is bypassed on UTILITIES screen	Mast Orientation Interlock NOT functional
BRIDGE REVERSE STOP #2	BRIDGE NEAR OR OVER CORE AND RX MODE SW NOT IN REFUEL OR ROD NOT SELECTED	NO BRIDGE REVERSE MOTION
FUEL HOIST INTERLOCK	BRIDGE NEAR OR OVER CORE AND MAIN HOIST FUEL LOADED AND NOT ALL RODS FULL IN	MAIN HOIST INOPERATIVE
FAULT DETECTED	MOTOR THERMAL OL - HOIST, BRIDGE, TROLLEY OPER CHECK TIMER - HOIST, BRIDGE, TROLLEY MOTOR DRIVE FAULT - HOIST, BRIDGE, TROLLEY ENCODER COMPARE ERROR - HOIST, BRIDGE, TROLLEY MAIN HOIST OVERSPEED PHASE LOSS MAIN CONTROL POWER OFF CABINET DOOR OPEN ON TROLLEY DECK VARIABLE SPEED SWITCHES NOT IN NEUTRAL DURING STARTUP	BRIDGE WILL NOT OPERATE NO BRIDGE, TROLLEY, HOIST MOTION GRAPPLES FAIL CLOSED
OVERHOIST BACKUP LIMIT #1	MAIN HOIST TRAVEL TO APPROX. 1" ABOVE CASK LOADING NORMAL UP	FURTHER MAIN HOIST RAISING PROHIBITED
OVERHOIST BACKUP LIMIT #2	MAIN HOIST TRAVEL TO APPROX. 11" ABOVE CASK LOADING NORMAL UP	FURTHER MAIN HOIST RAISING PROHIBITED
MAIN HOIST MOTION ERROR	Hoist motion was commanded in one direction AND hoist moved more than 2" from its starting point in other direction	NO hoist motion until condition acknowledged

ATTACHMENT 4

AUTO SCREEN ANNUNCIATORS

Annunciator	Initiating Conditions	Effect on Operations
YOU HAVE REQUESTED AN INVALID LOCATION	A location was requested which does NOT exist in the location database	CANNOT auto move to requested location
SEMI-AUTOMATIC IS NOT PERMISSIVE OR AUTOMATIC IS NOT PERMISSIVE	Automatic move requested which requires movement through Transfer Canal AND: 1) hoist NOT at Normal Up with grapple closed, OR 2) hoist position NOT less than 164" with grapple open	Auto move will NOT be executed
REQUEST PROHIBITED GATE IS INSTALLED	Bridge in pool AND auto move requested to core AND Refueling gate indicated as installed during LOGON	Auto move will NOT be executed

ATTACHMENT 5

HOIST CONDITION BY ELEVATION

Hoist Condition:	HOIST ENCODER VALUE:
Refueling Normal Up Limit:	0.00
Cask Loading Normal Up Limit	-6.00
Full Down Limit in Core:	553.00
Full Down Limit in Pool:	190.00
Full Down Limit at Prep Machines:	170.00
Full Down Limit in Cask area (Refueling Normal Up selected):	360.00
Full Down Limit in Cask area (Cask Loading Normal Up selected):	190.00
Set down of First Mast Section:	175.00
Set down of Second Mast Section:	372.00
Core Clear Grapple Closed:	< 355.00
Core Clear Grapple Open:	< 530.00
Racks Clear Grapple Closed:	Normal Up
Racks Clear Grapple Open:	< 164.00
Canal Clear Grapple Closed	Normal Up
Canal Clear Grapple Open	< 164.00
Cask Clear Fuel Loaded (Note: Only effective if Cask Loading Normal Up limit is selected.)	< -6.00
Cask Clear Grapple Open	< 164.00
Fuel entry slow zone core	365.00 to 400.00
Fuel entry slow zone pool racks	12.00 to 26.00
Fuel entry slow zone cask area	14.00 to 28.00
Fuel seating slow limit core	> 536.00
Fuel seating slow limit pool racks	> 177.00
Fuel seating slow limit cask area (Note: Only effective if Cask Loading Normal Up limit is selected.)	> 177.00
Mast Orientation Interlock Active-Core	> 365.00
Mast Orientation Interlock Active-Pool	> 7.00
Grapple Release Zone in Core	> 536.00

Note: Encoder values are approximate.

ATTACHMENT 6

SECURE TRAVEL ZONE DESCRIPTION

The PLC receives inputs from the bridge, trolley and hoist encoders, TRAVEL OVERRIDE push button, and grapple open/closed indication and compares that information with the defined areas or zone.

SECURE TRAVEL ZONE

The Secure Travel Zone for the bridge and trolley consists of two zones, one slightly smaller than the other. The smaller zone is the high speed zone which allows the bridge, trolley and main hoist to operate at their designed full speeds. The larger of the zones is the slow speed zone and slows the bridge and trolley speeds to 5 FPM until the Secure Travel Zone limit is reached activating the SAFETY TRAVEL INTERLOCK which stops the refueling platform.

The TRAVEL OVERRIDE push button is to allow further travel beyond the Secure Travel Zone or to travel back into the Secure Travel Zone at maximum speed of 5 FPM.

High speed zones and slow speed zones exist in the core, Transfer Canal and Fuel Pool(see attachment 7). If, during log on, the question "IS THE REFUELING GATE INSTALLED?" is answered yes, the refueling platform will be limited to the Pool Zone. The Canal Zone will no longer be accessible from the pool.

Main Hoist permissive zone for entrance into the Transfer Canal is dependent on whether the grapple is open or closed. If the grapple is open, then the hoist position must be less than 164 inches. If the grapple is closed, then the hoist must be at Normal Up position.

Bridge and trolley speed are limited to 2 FPM whenever the hoist is not at a "clear" elevation, depending on grapple status - see Attachment 5.

A zone in front of the East fuel prep machine enables the refueling bridge and trolley to drive into the prep machine <u>WITHOUT</u> the use of the Travel Override button. The bridge and trolley are limited to 5 FPM but the hoist may operate at 40 FPM. Travel Override is required to access the West fuel prep machine, but once in the prep zone, Travel Override is not required and bridge, trolley and hoist motion are the same as for the East prep machine.

The cask zones include the Cask Buffer Zone and the Cask Zone. They are in effect only when the Cask Loading Normal Up limit has been selected. The Cask Buffer Zone is an "L" shaped area just outside the cask pit where the racks end. Bridge and trolley motion will stop in this zone if the hoist is fuel loaded and <u>NOT</u> at the Cask Loading Normal Up limit. The bridge and trolley are limited to 30 FPM but the hoist may operate at 40 FPM.

The Cask Zone is still within the Pool Zone limits, with the Secure Travel Zone being defined by the Pool Zone limits. The bridge and trolley are limited to 30 FPM but the hoist may operate at 40 FPM.

ATTACHMENT 6(cont.)

HOIST AND GRAPPLE ZONES

Hoist speed is dependent on bridge and trolley position and grapple elevation. Hoist speed zones while in the Secure Travel Zone are shown on attachment 8. The hoist, while outside of the Secure Travel Zone is limited to a maximum of 10 FPM. The Grapple Full Down light will illuminate while outside of the Secure Travel Zone because the down limit is zone-dependent. The JOG LOWER speed is 2 FPM. Grapple release is prohibited if the bridge and trolley are over the core with the grapple engaged and hoist is NOT within 12 inches from the top of fuel seated in the core. This is known as the Grapple Release Zone(GRZ).

ATTACHMENT 7

BRIDGE AND TROLLEY ZONE ENFORCEMENT

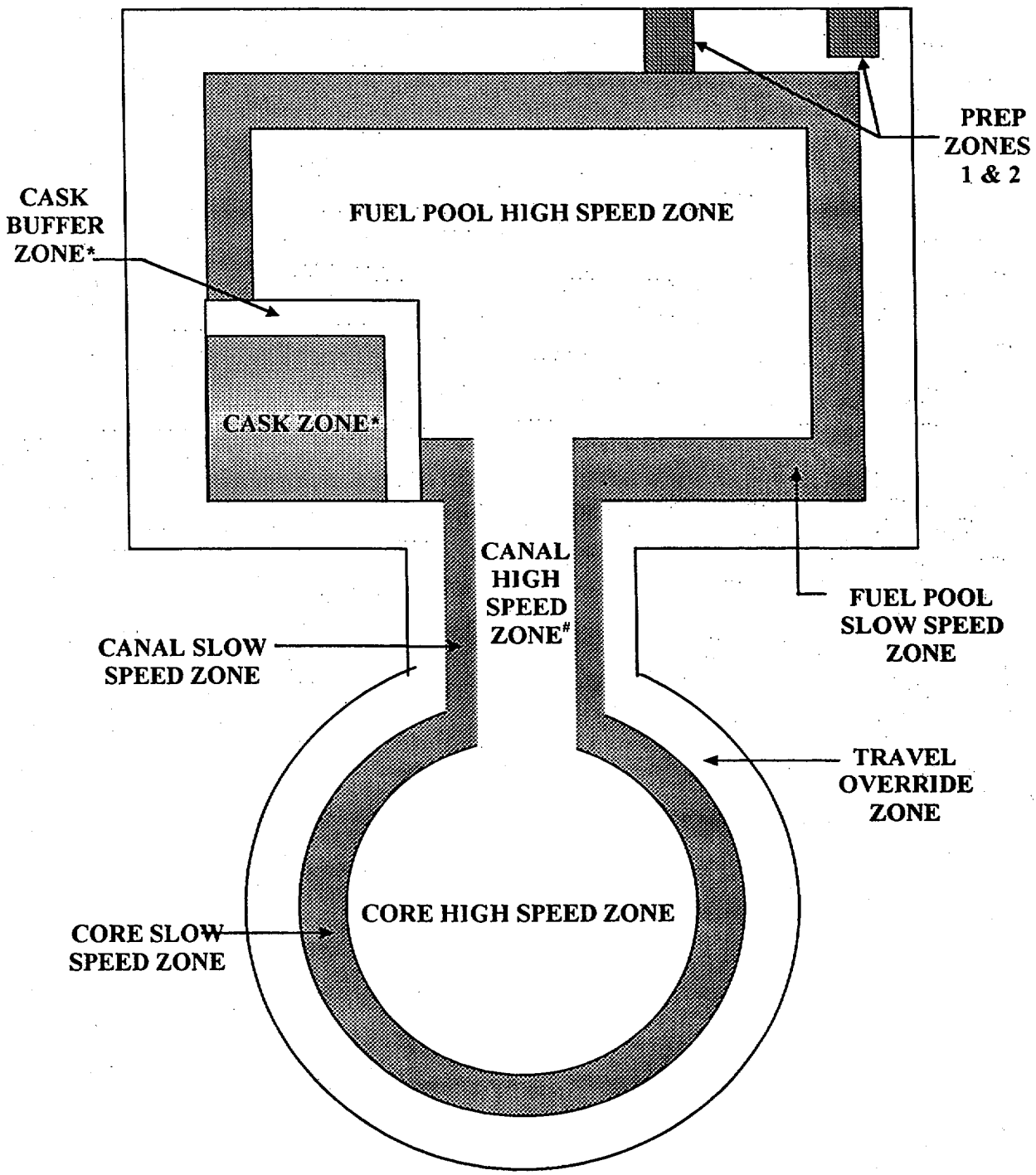

SECURE TRAVEL ZONE INCLUDES BOTH THE SLOW AND HIGH SPEED ZONES

*** IN EFFECT ONLY WHEN CASK LOADING NORMAL UP HAS BEEN SELECTED**

 # APPLIES TO BRIDGE ONLY; TROLLEY OPERATES AT SLOW SPEED IN THIS ZONE

ATTACHMENT 8

MAIN HOIST SPEED ZONES

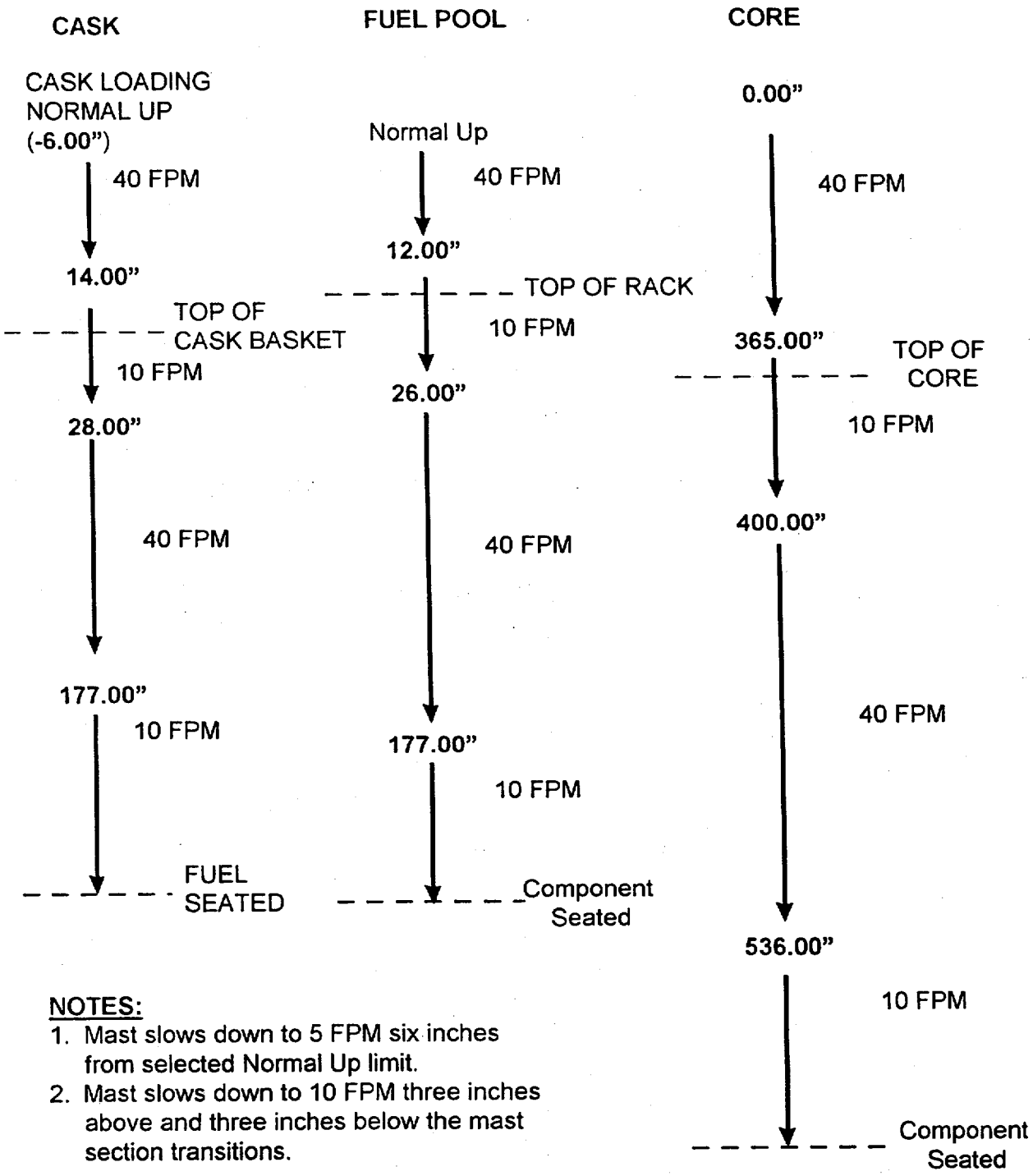

NOTES:

1. Mast slows down to 5 FPM six inches from selected Normal Up limit.
2. Mast slows down to 10 FPM three inches above and three inches below the mast section transitions.

All hoist speeds indicated are at maximum joystick deflection. Actual hoist speed for a given zone is variable up to the maximum, dependent on the amount of joystick deflection. All zones are approximate encoder readings

ATTACHMENT 9

HOIST ENCODER POSITION RANGES

	Range
Fuel or SBG* Entering Rack	17.0" - 19.0"
Fuel or SBG* Seated in Rack	186.2" - 188.2"
Fuel Entering Cask	17.5" - 19.5"
Fuel Seated in Cask	183.5" - 185.5"
Fuel or SBG* Entering Core	369.0" - 371.0"
Fuel or SBG* Seated in Core	549.2" - 551.2"
DBG** Entering Rack	11.5" - 13.5"
DBG** Seated in Rack	177.5" - 184.5"
DBG** Entering Core	367.0" - 369.0"
DBG** Seated in Core	543.7" - 548.7"
DBG** Stacked in Core	As determined acceptable by FHD
Bundle in FPM (Full Down)	166.5" - 168.5"
Bundle in FPM (Full Down with GE fuel inspection fixture installed)	159.2" - 161.2"
Bottom of Cask Pit	364.5" - 366.5"
Bundle Seated in Bundle Sipping Canister:_____ ID/Location	_____" - _____"
Bundle Seated in Bundle Sipping Canister:_____ ID/Location	_____" - _____"
Permissive for entrance into Transfer Canal with grapple open	< 164.00"
Permissive for entrance into Transfer Canal with grapple closed	Normal Up

* SBG = Single Blade Guide
** DBG = Double Blade Guide

TITLE: Full Automatic Fuel Transfer Within the Spent Fuel Pool (Peach Bottom)

TASK PERFORMED BY: _____ EVALUATOR: _____.

EVALUATOR SIGNATURE: _____ DATE: _____.

DIRECTIONS TO EVALUATOR:

NOTE: When used as an exam item for initial LSRO candidates, a qualified LSRO/DA and RPO are required on the bridge to ensure correct Double Verification. Initial LSRO candidates will be acting as platform operator; a position that normally utilizes a spotter for procedure reading, referencing, and performing the first check. This exam exercise will require the candidate to perform the first check as the RPO, with the qualified Fuel Handling Director performing the second check. The JPM does not use a dedicated spotter.

NRC examiners will generally limit themselves to observing and will not provide direction or cueing to the candidate because actual equipment will be manipulated. Pre-brief the qualified FHD that he or she is the accountable individual who is responsible for equipment safety, personal safety, and reactivity controls during operation by the candidate. The FHD is expected to maintain constant attention on bridge and mast operation such that intervention is possible prior to any misoperation or contact with obstructions. As a minimum, this includes (1) immediately stopping the bridge if a CCTAS error is committed or if unsafe bridge operation is taking place (2) restoring to starting conditions between each JPM, (3) collecting and returning the CCTAS signed final copies, and (4) shutting down the refueling platform after the exams. **The qualified FHD will interact with the candidate in as realistic a fashion as practicable in an exam setting. The FHD will not provide cues other than specified, and should concur with all verifications up to the point just prior to a misoperation.**

The qualified Operator should perform startup and checkout of the refueling platform and have on-hand the marked up copies of the procedures for review by the candidates. This individual will also load the CCTAS sequence into the computer. The actual CCTAS and bridge operating procedure in-use will be on the refuel platform.

Approx 2 weeks of lead-time is needed to coordinate bridge availability with the following:

1. NMD to schedule bridge availability and provide qualified operators and bridge startup
2. Operations for Refuel Floor Secondary Containment Integrity if required
3. Reactor Engineering for CCTAS generation
4. Health Physics for Refuel Floor and RWP support. The grappling and movement of components may require use of the refuel floor RWP in lieu of the work group standing RWP. Ensure a HP briefing is received prior to the exam.

EVALUATION METHOD :

PERFORM

EVALUATION LOCATION:

PLANT

APPROXIMATE COMPLETION TIME:

45 MINUTES

IMPORTANCE RATING(S): 3.7 SYSTEM NUMBER(S): 234000A3.02

REFERENCES:

1. SO 18.1.A-2(3) Rev. 11(12); Operation of Refueling Platform
2. FH-35 Rev 29; Control Of Material Movement In The Fuel Pool
3. RE-C-40 Rev 9; Core Component Transfer Authorization Sheet Generation And Administration

TASK STANDARD(S):

1. Dummy fuel assembly is transferred in full automatic mode of Refueling Platform operation between spent fuel rack locations in the Unit 2(3) Spent Fuel Pool per the CCTAS .

TASK CONDITIONS:

1. There are NO irradiated components grappled to any refueling platform hoist.
2. Auxiliary hoists are fully raised with attached tooling clear of obstructions.
3. SO 18.1.C-2(3) has been completed for alignment and checkout of the Refueling Platform. The Main Hoist encoder indicates less than 164 inches and the mast is positioned within the Spent Fuel Pool Secure Travel Zone.
4. Main Hoist Grapple is RELEASED.
5. Primary and Redundant encoders are selected for Bridge, Trolley and Hoist travel in accordance with SO 18.1.A-2(3).
6. REFUELING normal up limit has been selected for operation in accordance with SO 18.1.A-2(3).
7. Spent Fuel Pool Gate status is set at INSTALLED per SO 18.1.A-2(3).
8. REFUELING PLATFORM OPERATOR access level user is logged on to refuel platform computer.
9. An approved CCTAS for transfer of the dummy bundle has been obtained from Reactor Engineering. The Spent fuel rack locations specified on the CCTAS are within the Secure Travel Zone.
10. The approved electronic fuel move sequence file has been obtained from Reactor Engineering and loaded into the refuel platform computer in accordance with SO 18.1.A-2(3).
11. Prerequisites for dummy bundle transfer within the Spent Fuel Pool are completed per FH-35

INITIATING CUES:

The Control Room Supervisor has directed you to perform transfer of the dummy bundle within the Unit 2/3 spent fuel storage racks using **XY mode full automatic refueling platform operation**, in accordance with the attached CCTAS.

Critical Element(s) indicated by "*" in Performance Checklist.

PERFORMANCE CHECKLIST:

STEP	STANDARD	SAT/UNSAT
Section 4.8 – Pickup Location, Fuel Pool Storage Rack		
1. Position Refuel Platform Mast over desired core component in accordance with Core Component Transfer Authorization Sheet (CCTAS).	Operator branches to section 4.7 of procedure to execute full auto positioning of platform to pickup location.	
Section 4.7, Full Automatic Operation		
NOTES The following steps are performed on the Refueling Platform lower level, at XC-8(9)0832 "U/2(3) Refueling Platform Operator Interface Console" The Refuel Platform computer does NOT recognize Fuel Pool Storage Rack locations outside the Secure Travel Zone, the Fuel Preparation Machines, Bundle Sipping Canisters OR Spent Fuel Storage Cask locations as valid locations for automatic moves. An automatic move can be terminated at any time by performing one of the following: Touching "AUTO STOP" on the MAIN OR HOIST screen Deflecting any of the master joysticks Depressing "STOP" push button on START/STOP STATION Depressing "TRAVEL OVERRIDE" on RIGHT HAND CONTROLLER		
CAUTION Operation in Full Automatic mode requires both Primary AND Redundant Encoders to be selected for each axis in order to prevent collision of the mast OR handled component in the event a single encoder fails.		
2. * Touch "SHOW MENU".	"SHOW MENU" touch screen button actuated.	
3. * Touch "XY/XY&Z MODE ACTIVE" as necessary to select the desired mode of multiple axis automatic operation.	"XY/XY&Z MODE ACTIVE" touch screen button is actuated (toggled) to select **XY mode** of operation.	

STEP	STANDARD	SAT/UNSAT
4. * Touch "PRESS FOR OPERATION".	"PRESS FOR OPERATION" touch screen button actuated.	
5. IF in the Fuel Pool AND grapple is released, THEN verify hoist position indicates less than 164 inches.	Main Hoist position indication is verified to be less than 164 inches.	
6. IF operating in the XY&Z mode, THEN perform the following, OTHERWISE continue with step 4.7.4 of this procedure:	Operator branches to step 4.7.4 of procedure.	
7. Verify Bridge AND Trolley are within the Secure Travel Zone.	Bridge AND Trolley are verified to be within the Secure Travel Zone. (The bridge will already be in the secure travel zone)	
8. Verify Bridge AND Trolley are NOT in the Transfer Canal.	Bridge AND Trolley are verified NOT in the Transfer Canal.	
9. * Touch "SELECT AUTO" on the Main OR Hoist screens.	"SELECT AUTO" touch screen pushbutton is actuated.	
10. IF during auto move selection it is desired to return to manual operation, THEN touch "SELECT MANUAL", OTHERWISE continue with this procedure subsection.	N/A	N/A
11. * Touch "Manual Step Selection Active"/ "Auto Step Selection Active" as necessary to select "Auto Step Selection Active".	"Manual Step Selection Active" / "Auto Step Selection Active" touch screen pushbutton is actuated (toggled) to select "**Auto Step Selection Active**".	

STEP	STANDARD	SAT/UNSAT
NOTE The selected portion (PICKUP/SETDOWN) of the auto move to be performed is highlighted in green on the MOVE INFORMATION section of the screen. The requested location along with its bridge and trolley coordinates are displayed in a box on the bottom of the screen.		
12. IF it is desired to select a particular step in the move sequence, THEN touch "SELECT NEW STEP NUMBER" AND enter desired step on the keypad screen.	Operator ensures PICKUP portion of CCTAS step to be performed is highlighted on the screen, touching SELECT NEW STEP NUMBER" and entering desired step as required.	
13. IF it is desired to increment to the SETDOWN portion of a step OR the PICKUP portion of the next step in the sequence, THEN touch "INCREMENT STEP".	N/A	N/A
14. * If requested location is correct, then touch "VERIFY". Otherwise return to step 4.7.9 [JPM step 12]	"VERIFY" touch screen pushbutton is actuated.	
15. * Touch "AUTO RUN" to initiate Refueling Platform movement.	"AUTO RUN" touch screen pushbutton is actuated to initiate motion of the refueling platform. The refuel platform will move to the setdown location. The candidate will now continue procedure section 4.8	
Grappling the dummy bundle after moving the platform		
16. Lower hoist until grapple is 6 to 12 inches above bail.	The hoist is lowered using the variable speed control, located on the right hand console until the hoist position indication is between 175-183 for Unit 2 (174-182 for Unit 3).	
17. Verify grapple is open.	The GRAPPLE switch, located on the right hand console, is ensured to be in the RELEASE position and GRAPPLE ENGAGED light is off.	
18. Rotate grapple as necessary to achieve grapple to bail alignment.	The mast is rotated so that the dummy bundle bail handle is aligned with the fuel grapple.	

STEP	STANDARD	SAT/UNSAT
19. * Slowly lower hoist until "SLACK CABLE" light is lit.	The hoist is slowly lowered down over the bail of the dummy bundle. SLACK CABLE light verified lit.	
20. Verify proper core component location and orientation	DV performed. Location and orientation correct	
21. Verify the following, THEN inform FHD of grapple position:	N/A	
a. Grapple is centered over bail handle.	The grapple is verified to be centered on the bail handle.	
b. Hoist position indication agrees with Attachment 9 for item seated in Fuel Pool Storage Rack.	The hoist position indication is verified between 186.5 and 188.5 inches for Unit 2 (186.2 and 188.2 inches for Unit 3).	
22. *WHEN directed by FHD, THEN engage grapple, AND verify GRAPPLE ENGAGED light is lit. FHD CUE: "Engage the grapple"	The GRAPPLE switch is positioned to ENGAGE and the GRAPPLE ENGAGED light is verified lit.	
23. * WHEN directed by FHD, slowly raise load AND verify "HOIST LOADED" light is lit (fuel only). FHD CUE:"Raise the bundle"	The dummy bundle is slowly raised using the GRAPPLE joystick. The HOIST LOADED light is verified to be lit after the dummy bundle begins to rise.	
24. * Continue raising until grapple is fully raised, THEN verify "GRAPPLE NORMAL UP" light is lit.	Grapple is raised until NORMAL UP light becomes lit.	
25. Perform appropriate "Set Down Location" subsection of this procedure as directed by FHD.	Operator branches to section 4.13 of procedure.	
Moving Bridge to Target Fuel Pool Location		
26. * Position core component over desired location in accordance with Core Component Transfer Authorization Sheet (CCTAS).	Operator branches to section 4.7 of procedure to execute full automatic positioning of refueling platform to setdown location.	

STEP	STANDARD	SAT/UNSAT
27. IF in the Fuel Pool AND grapple is engaged, THEN verify hoist is at Normal Up position.	Main Hoist position indication is verified to be Normal Up.	
28. IF operating in the XY&Z mode, THEN perform the following, OTHERWISE continue with step 4.7.4 of this procedure:	N/A	
29. Verify Bridge AND Trolley are within the Secure Travel Zone.	Bridge AND Trolley are verified to be within the Secure Travel Zone.	
30. Verify Bridge AND Trolley are NOT in the Transfer Canal.	Bridge AND Trolley are verified NOT in the Transfer Canal.	
31. * Touch "SELECT AUTO" on the Main OR Hoist screens.	"SELECT AUTO" touch screen pushbutton is actuated.	
32. IF during auto move selection it is desired to return to manual operation, THEN touch "SELECT MANUAL", OTHERWISE continue with this procedure subsection.	N/A	N/A
33. * Touch "Manual Step Selection Active"/ "Auto Step Selection Active" as necessary to select "Auto Step Selection Active".	"Manual Step Selection Active" / "Auto Step Selection Active" touch screen pushbutton is actuated (toggled) as necessary to select "**Auto Step Selection Active**".	
NOTE The selected portion (PICKUP/SETDOWN) of the auto move to be performed is highlighted in green on the MOVE INFORMATION section of the screen. The requested location along with its bridge and trolley coordinates are displayed in a box on the bottom of the screen.		
34. IF it is desired to select a particular step in the move sequence, THEN touch "SELECT NEW STEP NUMBER" AND enter desired step on the keypad screen.	N/A Note to evaluator: Not necessary, but OK if operator directly enters step number here or increments to it in the next step	N/A

STEP	STANDARD	SAT/UNSAT
35. IF it is desired to increment to the SETDOWN portion of a step OR the PICKUP portion of the next step in the sequence, THEN touch "INCREMENT STEP".	Operator touches INCREMENT STEP button and ensures SETDOWN portion of CCTAS step is highlighted on the screen.	
36. * Touch "VERIFY".	"VERIFY" touch screen pushbutton is actuated.	
37. * Touch "AUTO RUN" to initiate Refueling Platform movement.	"AUTO RUN" touch screen pushbutton is actuated to initiate motion of the refueling platform. **Platform motion should occur here and will terminate over the target location** Operator returns to section 4.13 of procedure.	
Lowering of Bundle into Target Location following Auto Movement		
38. * Rotate core component as necessary to achieve proper orientation.	The mast is rotated so that the dummy bundle channel fastener is correctly oriented to the corner of the storage rack cell in accordance with CCTAS.	
39. Perform Double Verification to ensure proper core component location and orientation.	DV performed. Location and orientation correct	
40. * WHEN directed by FHD, THEN lower load until "SLACK CABLE" light is lit. FHD CUE: "Lower the bundle."	The dummy bundle is slowly lowered into the storage rack until the SLACK CABLE light is lit.	
41. Verify the following, THEN inform FHD of grapple position. a. Component elevation appears equivalent to other stored components in the rack.	The dummy bundle is observed to be not significantly above the top of the rack.	
b. * Hoist position indication agrees with Attachment 9 for item fully seated in Fuel Pool Storage Rack.	The hoist position indication is verified between 186.5 and 188.5 inches for Unit 2 (186.2 and 188.2 inches for Unit 3).	

STEP	STANDARD	SAT/UNSAT
42. * WHEN directed by FHD, THEN release grapple, AND verify grapple is open. FHD CUE: "Release the grapple."	Open the grapple by placing the GRAPPLE switch to the RELEASE position. Grapple is verified open.	
43. Slowly raise hoist while verifying "HOIST LOADED" light remains off.	The hoist is slowly raised using the GRAPPLE joystick while HOIST LOADED light is verified to remain off.	
44. Record completion of component transfer on CCTAS. NRC CUE: "You have reached the termination point for this JPM. You may stop here"	Initials of the operator are written in the RPO column of the CCTAS. The TIME and DATE columns are filled with the current date and time.	

Comments:

Note: Any grade of UNSAT requires a comment.

JPM Overall Rating: _____
SAT/UNSAT

TASK CONDITIONS:

1. There are NO irradiated components grappled to any refueling platform hoist.
2. Auxiliary hoists are fully raised with attached tooling clear of obstructions.
3. SO 18.1.C-2(3) has been completed for alignment and checkout of the Refueling Platform. The Main Hoist encoder indicates less than 164 inches and the mast is positioned within the Spent Fuel Pool Secure Travel Zone.
4. Main Hoist Grapple is RELEASED.
5. Primary and Redundant encoders are selected for Bridge, Trolley and Hoist travel in accordance with SO 18.1.A-2(3).
6. REFUELING normal up limit has been selected for operation in accordance with SO 18.1.A-2(3).
7. Spent Fuel Pool Gate status is set at INSTALLED per SO 18.1.A-2(3).
8. REFUELING PLATFORM OPERATOR access level user is logged on to refuel platform computer.
9. An approved CCTAS for transfer of the dummy bundle has been obtained from Reactor Engineering. The Spent fuel rack locations specified on the CCTAS are within the Secure Travel Zone.
10. The approved electronic fuel move sequence file has been obtained from Reactor Engineering and loaded into the refuel platform computer in accordance with SO 18.1.A-2(3).
11. Prerequisites for dummy bundle transfer within the Spent Fuel Pool are completed per FH-35.

INITIATING CUES:

The Control Room Supervisor has directed you to perform transfer of the dummy bundle within the U/2(3) spent fuel storage racks using **XY mode full automatic refueling platform operation**, in accordance with the attached CCTAS.

CANDIDATE

P2DUMMY - VERIFIED

Unit Peach Bottom - UNIT 2 DATE 03/22/2002

Title DUMMY BUNDLE MOVES FOR TRAINING (REV 0)

RE-C-40 CORE COMPONENT TRANSFER AUTHORIZATION SHEET SPECIAL INSTRUCTIONS

1. THIS CCTAS PROVIDES THE MOVES NECESSARY TO MOVE THE DUMMY BUNDLE IN THE PB 2 SPENT FUEL POOL FOR TRAINING PURPOSES.

2. CHANGES TO THIS CORE COMPONENT TRANSFER AUTHORIZATION SHEET (OTHER THAN THOSE DESCRIBED BELOW) MUST BE MADE IN ACCORDANCE WITH PROCEDURE RE-C-40. CONTACT THE REACTOR ENGINEERING MANAGER (OR DESIGNATE) IF A CCTAS CHANGE IS REQUIRED. DESIGNATES ARE JEFF HOLLEY (4553) OR MIKE HOLMES (4710).

3. ANY STEPS NOT DESIRED TO BE PERFORMED CAN BE MARKED "N/A", AND THE DESIRED "MOVE TO" LOCATION CAN BE CHANGED WITHOUT NOTIFIYING REACTOR ENGINEERING. HOWEVER, AT THE END OF TRAINING ENSURE THAT THE DUMMY BUNDLE IS RETURNED TO ITS ORIGINAL STORAGE LOCATION (YY-38 SW) BY PERFORMING STEP 2 OF THE CCTAS.

4. THIS CCTAS MUST BE USED IN CONJUNCTION WITH PROCEDURE FH-35 "CONTROL OF MATERIAL MOVEMENT IN THE FUEL POOL".

5. THIS CCTAS DOES NOT INVOLVE THE TRANSFER OF SPECIAL NUCLEAR MATERIAL (SNM).

6. RETURN COMPLETED CCTAS TO REACTOR ENGINEERING SO THATCCTAS RECORDS CAN BE UPDATED.

7. IF A SPOTTER (AS DEFINED IN FH-35) IS BEING USED TO PERFORM DOUBLE VERIFICATION OF THE CCTAS MOVES IN PLACE OF THE RPO, THEN THE SPOTTER SHALL DOCUMENT THIS DOUBLE VERIFICATION BY SIGNING THE RPO COLUMN ON THE CCTAS.

8. MULTIPLE COPIES OF THIS CCTAS CAN BE MADE TO SUPPORT TRAINING OF AS MANY TRAINEES AS THE INSTRUCTOR DEEMS NECESSARY.

WRITTEN BY: Jeffrey W Holley

REVIEWED BY: M L Holmes

AUTHORIZED BY: S M [illegible]

DISTRIBUTION LEGIBLE: Jeffrey W Holley

P2DUMMY - **VERIFIED**

Written By: Jeff Holley

Unit Peach Bottom - UNIT 2 Date 03/22/2002 Reviewed By: Mike Holmes

Title DUMMY BUNDLE MOVES FOR TRAINING (REV 0) Authorized By: Steve Hesse

STEP NO.	COMPONENT SERIAL NO.	MOVE FROM	ORIENT	MOVE TO	ORIENT	FHD	RPO	DATE	TIME
1	DUMMY	P2SPENT YY-38	SW	P2SPENT Z-56	NW				
2	DUMMY	P2SPENT Z-56	NW	P2SPENT YY-38	SW				

FOR TRAINING PURPOSES ONLY

PECO Energy Company
Peach Bottom Unit 2

SO 18.1.A-2 OPERATION OF REFUELING PLATFORM

1.0 PURPOSE

This provides the instruction necessary to operate the Refueling Platform Main Hoist for core component and DUMMY fuel bundle movements within the Fuel Pool and Reactor Core. This procedure shall be used in conjunction with Fuel Handling Procedure FH-6C, "Core Component Movement - Core Transfers", or FH-35, "Control of Material Movement in the Fuel Pool" as appropriate.

2.0 PREREQUISITES

2.1 IF performing transfers in the Reactor, THEN all prerequisites included in Procedure FH-6C, "Core Component Movement - Core Transfers" have been completed as appropriate.

2.2 IF performing transfers in the Fuel Pool only, THEN all prerequisites included in Procedure FH-35, "Control of Material Movement in the Fuel Pool" have been completed as appropriate.

2.3 DUMMY fuel bundle movement shall be governed by FH-35 OR FH-6C.

2.4 Refuel Platform started up AND checked out in accordance with SO 18.1.C-2, "Electrical, Mechanical and Pneumatic Alignment/Checkout of Refueling Platform." The main hoist section of the Refueling Platform Preoperational Checkoff List should be performed over the Reactor Cavity as soon as possible after core is accessible. Performing the preoperational checks in the cavity will ensure the mast will lower to the core height without binding.

2.5 IF operating in Full Automatic OR Semi-Automatic modes, THEN both Primary AND Redundant Encoders are selected for each axis on the UTILITIES screen(Ref. 6.5).

2.6 IF performing movement to OR from a Spent Fuel Storage Cask, THEN Cask Loading Normal Up limit shall be selected, OTHERWISE Refueling Normal Up limit shall be selected.

2.7 Attachment 9 of this procedure is posted on the Refueling Platform Mast.

3.0 PRECAUTIONS

3.1 WHEN operating equipment, IF it does NOT perform as expected, THEN place the equipment in a safe condition AND inform Shift Management or Fuel Handling Director(FHD).

3.2 Procedures SO 18.7.G-2, "Refueling Platform Overrides and Bypasses" and SO 18.7.F-2, "Handwheel Operation of Refueling Platform Bridge, Trolleys and Hoists" provide alternate methods for platform operation when the Refueling Platform is NOT performing as expected.

3.3 The monorail and frame mounted auxiliary hoist shall be full-up on hoist override with tools removed when not in use. Alternately, the tool and hoist cable may be stored in a safe location. Jam blocks shall be installed on aux hoist cables at all times.

3.4 Blade guides may be removed from the reactor core provided the associated control rod blade will be diagonally supported by fuel or other blade guide(s).

3.5 To prevent impact or mast/fuel assembly damage:

3.5.1 Trolley and Bridge shall always be accelerated AND decelerated slowly, avoiding sudden starts and stops.

3.5.2 Travel paths shall be clear before moving core components.

3.5.3 IF fuel OR a blade guide is grappled on the Main Hoist(grapple engaged), THEN "GRAPPLE NORMAL UP" light shall be lit before moving into Transfer Canal.

3.5.4 IF Main Hoist grapple is empty (grapple open), THEN Main Hoist position shall indicate less than 164 inches before moving into Transfer Canal.

3.5.5 Main Hoist grapple shall be in Normal Up position with "GRAPPLE NORMAL UP" light lit when not in use.

3.5.6 IF a core component is partially inserted into a location, THEN Bridge AND Trolley shall only be moved using the TRAVERSE SYSTEM joystick for minor adjustments.

3.5.7 IF possible, observe channel fastener as it enters the core, fuel rack or sipping canister. To ensure channel fastener does NOT catch, push or pull mast assembly as required as bundle approaches fully seated position.

3.5.8 Use extreme caution and a slow hoist speed when handling unchanneled fuel bundles. Unchanneled bundles have the potential to twist and damage the bundle. Finger springs on the lower tie plate and fuel rod spacers may catch during bundle removal OR insertion.

3.5.9 The following precautions apply when loading a fuel cask:

3.5.9.1 Top edge of cask fuel compartment could be damaged if impacted by a fuel bundle or weight of bundle is transferred to compartment. Use great care when aligning fuel bundle with cask opening.

3.5.9.1 Cask drain line protrudes into cask above the elevation of the fuel basket. Use great care when maneuvering bundles near the drain line as impacting drain line could cause fuel damage and/or drain line damage.

3.6 Mast camera may impact surrounding structures when manipulating core components in the Reactor Core periphery, Fuel Pool periphery, Fuel Preparation Machine or Spent Fuel Storage Cask. Exercise caution to avoid impact damage.

3.7 IF during hoist operation:

3.7.1 "HOIST JAM" light comes on, THEN immediately stop and lower until "HOIST JAM" light goes out, THEN inform Fuel Handling Director for instruction.

3.7.2 "HOIST LOADED" light goes out prematurely, OR the load starts to lean, THEN:

3.7.2.1 Immediately stop lowering hoist.

3.7.2.2 Verify grapple switch is in "ENGAGE" position.

3.7.2.3 Verify "GRAPPLE ENGAGED" light is lit.

3.7.2.4 Slowly raise hoist to regain the weight of the load.

3.7.2.5 Inform Fuel Handling Director.

3.7.3 "GRAPPLE ENGAGED" light goes out unexpectedly during operation, THEN immediately stop and inform Fuel Handling Director.

3.7.4 "HOIST LOADED" light comes on unexpectedly while raising grapple, THEN:

3.7.4.1 Immediately stop raising hoist.

3.7.4.2 Slowly lower hoist until "HOIST LOADED" light goes out.

3.7.4.3 Inform Fuel Handling Director.

3.7.5 "ROD BLK INTERLK #1" light does NOT light when refuel platform is over the core with the Main Hoist fuel loaded, THEN stop refuel platform operation AND inform Fuel Handling Director.

3.8 Fuel bundles may contact Control Rod Blades (CRB) at two elevations, approximately 385" and 400" hoist encoder position.

3.9 Prior to component handling concurrent with use of other unique equipment in the Reactor Cavity or Spent Fuel Pool, a determination should be made regarding the level of monitoring necessary to prevent contact between the equipment and the refuel platform mast, mast camera or core components suspended from the grapple.

Examples of unique equipment include in-vessel inspection or repair equipment, particularly those with umbilical cables. Depending on the risk of interference, consideration shall be given to positioning an individual on the refuel platform assigned the responsibility to monitor the position of the equipment (and umbilical if applicable) and alert Fuel Handling crew to STOP if interference is imminent.

3.10 If possible the fuel grapple shall be directly observed to be closed prior to lifting a load. Also check that the load's bail handle is inside the grapple head.

3.11 The RPO must NOT watch the hoist position indicator exclusively when a handled component is about to enter a designated location or when the empty grapple is approaching a seated component. The operator should observe component or grapple movement to avoid damage.

3.12 Peripheral fuel assemblies have a potential to miss their fuel support and seat low. Use extreme caution to maintain proper alignment while inserting assembly into the core.

3.13 Fuel bundles should be seated using a constant slow hoist speed while gently shaking the mast. Extreme slow speed and the absence of vibration increases the potential for bundles to require reseating.

3.14 Extra caution should be used when handling very old bundles. Careful monitoring of hoist load should be performed during lifting to ensure failure of bundle tie rods is promptly identified. In addition, channel fasteners AND bail handles have been found bent on old bundles which can lead to difficulty seating or releasing the bundle.(Reference 6.6)

3.15 Gentle rotation of the mast in both directions should be used prior to grapple engagement to ensure the fuel grapple is centered on the bail handle. Rapid OR rough rotation during this check can lead to bundle damage, particularly when moving dechanneled fuel bundles(Reference 6.6).

3.16 The Refueling Platform shall be operated at the REFUELING PLATFORM OPERATOR access level unless specified otherwise in this OR other controlling procedures.

3.17 Power is removed from the cabinet air conditioners when a FAULT LOCKOUT occurs OR the STOP push button is depressed. This may cause a "CONSOLE HIGH TEMPERATURE" alarm.

3.18 Bridge speed is limited when the Main Hoist grapple is closed(engaged) AND the Main Hoist NOT fuel loaded. In this condition the PLC logic assumes there is a single or double blade guide on the Main Hoist and limits speed to prevent excessive drag loading on the mast(Ref. 6.7).

3.19 Prior to leaving the refueling platform temporarily unattended, the platform shall be positioned as directed by the FHD and the "STOP" push button depressed. Procedure SO 18.2.A-2, "Shutdown Of Refueling Platform", shall be performed for longer periods of shutdown(e.g. lunch hour, overnight, etc.).

3.20 IF Refueling Platform power needs to be temporarily interrupted (e.g., electrical blocking for emergent repairs OR transfer to/from alternate power supply), THEN perform computer shutdown section of SO 18.2.A-2, "Shutdown of Refueling Platform" prior to interrupting power.

3.21 Deenergizing the refueling platform while over the Reactor Cavity(track switches actuated) will generate a Rod Withdrawal Block in the Main Control Room. Notify Unit Reactor Operator prior to deenergizing the refueling platform with the track switches actuated.

3.22 The touch screen on the Operator Interface Console is required to be functional in order to change configuration of certain parameters(e.g., selection of Normal Up limit, selection of encoders for each axis, modification of Secure Travel Zone to recognize Fuel Pool Gate as removed or installed) and to operate in Semi-Automatic or Full Automatic modes. If all parameters are configured as required, the touch screen is NOT required to be functional for safe refueling platform operation in manual mode. Although the screen annunciator messages will NOT be available, the corresponding conditions will be evident via other visual or functional indications.

3.23 IF power to the PLC is interrupted while operating without a functional touch screen, THEN the Fuel Pool Gate status will default to "installed" when power is restored, preventing entrance into the Transfer Canal. The PLC will also default to the Refueling Normal Up limit when power is restored.

3.24 IF the message "COMMUNICATION TO THE PLC HAS BEEN LOST" is displayed on the touch screen meaning no further screen updates are possible, THEN refueling platform operation may continue in manual mode.

3.25 The OPERATOR INTERFACE CONSOLE AND SRO Station screens may be used as an alternate to the Right Hand OR Left Hand Controllers for verification of "SLACK CABLE", "HOIST LOADED", "GRAPPLE NORMAL UP" and "GRAPPLE ENGAGED" light status.

3.26 The keyboard AND/OR mouse stored in the OPERATOR INTERFACE CONSOLE may be connected to the front of the OPERATOR INTERFACE CONSOLE and used as an alternative to the "touch" function of the touch screen.

3.27 The computer slave screen at the SRO Station is for convenience and NOT required to be operational for Refueling Platform operation.

3.28 The Mast Orientation Interlock logic is NOT required to be functional for safe Refueling Platform operation. This optional feature is only active in Full Automatic mode and is a backup to the Double Verification by the FHD and RPO OR FHD and Spotter, which is the primary means of component orientation verification. Procedure SO 18.7.G-2, "Refueling Platform Overrides and Bypasses" provides instructions necessary to bypass the Mast Orientation Interlock logic if it is NOT performing as expected.

3.29 Attachments 1 through 4 summarize Refuel Platform interlocks and annunciators, including initiating conditions and effects on the system. Some of the screen annunciators provide suggested actions based on the initiating conditions. IF any annunciators appear unexpectedly, including those with suggested actions, THEN stop platform operation AND inform FHD prior to taking any action.

3.30 Touch screen annunciators with a pink background will bring up a popup information screen when touched. Touching "ACKNOWLEDGE" will close the popup screen.

3.31 Attachments 6 through 8 provide information regarding the Secure Travel Zone, Grapple Release Zone and bridge, trolley and hoist speed zones.

3.32 A CCTAS is not required for movement of the DUMMY fuel bundle.

4.0 PERFORMANCE STEPS

NOTES

1. The performance steps section of this procedure is separated into the following subsections:

   - o 4.1, Logging ON Computer
   - o 4.2, Change Person Logged ON Computer
   - o 4.3, Selection of Encoders for Bridge, Trolley and Hoist
   - o 4.4, Selection of Normal Up Limit
   - o 4.5, Loading Fuel Move Sequence From Shuffleworks
   - o 4.6, Semi-Automatic Operation
   - o 4.7, Full Automatic Operation
   - o 4.8, Pickup Location - Fuel Pool Storage Rack
   - o 4.9, Pickup Location - Reactor Core
   - o 4.10, Pickup Location - Fuel Preparation Machine
   - o 4.11, Pickup Location - Bundle Sipping Canister
   - o 4.12, Pickup Location - Spent Fuel Storage Cask
   - o 4.13, Set Down Location - Fuel Pool Storage Rack
   - o 4.14, Set Down Location - Reactor Core
   - o 4.15, Set Down Location - Fuel Preparation Machine
   - o 4.16, Set Down Location - Bundle Sipping Canister
   - o 4.17, Set Down Location - Spent Fuel Storage Cask

2. Perform applicable subsections of Section 4.0 at the direction of the FHD.

3. Refueling Platform operating mode(i.e. Manual, Semi-Automatic or Full Automatic) is NOT prescribed in the pickup/set down subsections of this procedure. Operating mode is at the discretion of the fuel handling crew.

4.1 Logging ON Computer

4.1.1 Touch "LOG ON" AND enter name.

4.1.2 IF incorrect name was entered, THEN touch "CHANGE NAME" AND enter name.

4.1.3 Touch "ENTER PASSWORD" AND enter password.

NOTE

Answering "YES" to the question "IS THE REFUELING GATE INSTALLED" modifies the Secure Travel Zone boundary to NOT allow entrance into the Transfer Canal.

4.1.4 At screen prompt "IS THE REFUELING GATE INSTALLED?", answer "YES" if either gate is installed OR "NO" if both gates are removed.

4.1.5 Verify proper access level is displayed.

4.1.6 Touch "PRESS FOR OPERATION" to display "MAIN" screen.

4.2 Change Person Logged ON Computer

4.2.1 Touch "SHOW MENU".

4.2.2 Touch "LOG OFF"

4.2.3 Touch "YES/LOG OFF".

4.2.4 New operator perform Section 4.1 of this procedure.

4.3 Selection of Encoders for Bridge, Trolley and Hoist

NOTE

This section can only be performed by personnel with FUEL HANDLING DIRECTOR access level OR higher.

4.3.1 Touch "SHOW MENU".

4.3.2 Touch "UTILITIES".

NOTE

Steps 4.3.3 through 4.3.5 apply to the Bridge, Trolley and Hoist encoders.

```
*****************************************************************
*                          CAUTION                              *
*                                                               *
*     Operation in Semi-Automatic OR Full Automatic modes       *
*     requires both Primary AND Redundant Encoders to be        *
*     selected(i.e. "0") for each axis in order to prevent      *
*     collision of the mast OR handled component in the event   *
*     a single encoder fails(Ref. 6.5).                         *
*****************************************************************
```

4.3.3 Touch screen button displaying current encoder selection for the axis to be set.

4.3.4 On the number pad enter desired encoder selection(i.e. "0", "1" OR "2").

4.3.5 Verify desired encoder selection is displayed on button.

4.3.6 Touch "RETURN TO OPERATION".

4.3.7 Perform Section 4.2 "Change Person Logged ON Computer" of this procedure to ensure operation at REFUELING PLATFORM OPERATOR access level.

4.4 Selection of Normal Up Limit

> NOTE
>
> This section can only be performed by personnel with FUEL HANDLING DIRECTOR access level OR higher.

4.4.1 Touch "SHOW MENU".

4.4.2 Touch "UTILITIES".

4.4.3 Touch "Refueling/Cask Loading" button to select appropriate Normal Up limit for the planned evolution.

4.4.4 Verify desired Normal Up Limit is displayed.

4.4.5 Touch "RETURN TO OPERATION".

4.4.6 Perform Section 4.2 "Change Person Logged ON Computer" of this procedure to ensure operation at REFUELING PLATFORM OPERATOR access level.

4.5 Loading Fuel Move Sequence From Shuffleworks

> NOTE
>
> This section can only be performed by personnel with FUEL HANDLING DIRECTOR access level OR higher.

4.5.1 Touch "SHOW MENU".

4.5.2 Touch "UTILITIES".

4.5.3 Touch "GO TO DATABASE".

4.5.4 Verify floppy disk containing the fuel move sequence has the appropriate approvals required by RE-C-40, "Core Component Transfer Authorization Sheet Generation and Administration".

4.5.5 At the OPERATOR INTERFACE CONSOLE insert the floppy disk into the computer.

4.5.6 Touch "LOAD NEW SEQUENCE FILE".

4.5.7 Select type of move sequence, i.e., SHUFFLE, OFFLOAD OR RELOAD.

4.5.8 WHEN the prompt appears "Is The New Sequence Disk in Drive A:\", THEN touch "YES".

4.5.9 WHEN file has completed loading from disk, THEN remove floppy disk.

4.5.10 Touch "Open Sequence File".

NOTE

The Shuffleworks file designates orientation as follows:

0 - NE
1 - SE
2 - SW
3 - NW

4.5.11 Verify a sample of steps against the paper copy Core Component Transfer Authorization Sheet(CCTAS).

4.5.12 Touch "Return To Control".

4.5.13 Touch "RETURN TO OPERATION".

4.5.14 Perform Section 4.2 "Change Person Logged ON Computer" of this procedure to ensure operation at REFUELING PLATFORM OPERATOR access level.

4.6 Semi-Automatic Operation

NOTES

1. The Refuel Platform computer does NOT recognize Fuel Pool Storage Rack locations outside the Secure Travel Zone, the Fuel Preparation Machines, Bundle Sipping Canisters OR Spent Fuel Storage Cask locations as valid locations for automatic moves.

2. An automatic move can be terminated at any time by performing one of the following:
   - o touching "AUTO STOP" on the MAIN OR HOIST screen
   - o deflecting any of the master joysticks
   - o depressing "STOP" push button on START/STOP STATION
   - o depressing "TRAVEL OVERRIDE" on RIGHT HAND CONTROLLER

****
* CAUTION *
*
* Operation in Semi-Automatic mode requires both Primary *
* AND Redundant Encoders to be selected for each axis in *
* order to prevent collision of the mast OR handled *
* component in the event a single encoder fails(Ref. 6.5). *
****

4.6.1 IF desired to change mode of multiple axis automatic operation, THEN perform the following; OTHERWISE continue with step 4.6.2:

4.6.1.1 Touch "SHOW MENU".

4.6.1.2 Touch "XY/XY&Z MODE ACTIVE" as necessary to select the desired mode of multiple axis automatic operation.

4.6.1.3 Touch "PRESS FOR OPERATION".

4.6.2 IF operating in the XY mode, THEN perform the following, OTHERWISE continue with step 4.6.3 of this procedure:

4.6.2.1 IF in the Fuel Pool AND grapple is released, THEN verify hoist position indicates less than 164 inches.

4.6.2.2 IF in the Fuel Pool AND grapple is engaged, THEN verify hoist is at Normal Up position.

4.6.2.3 IF above the core AND grapple is released AND the requested location will be in the core, THEN verify hoist position indicates less than 530 inches.

4.6.2.4 IF above the core AND grapple is released AND the requested location will be in the Fuel Pool, THEN verify hoist position indicates less than 164 inches.

4.6.2.5 IF above the core AND grapple is engaged AND the requested location will be in the core, THEN verify hoist position indicates less than 355 inches.

4.6.2.6 IF above the core AND grapple is engaged AND the requested location will be in the Fuel Pool, THEN verify hoist is at Normal Up position.

4.6.3 IF operating in the XY&Z mode, THEN perform the following, OTHERWISE continue with step 4.6.4 of this procedure:

4.6.3.1 IF in the Fuel Pool AND grapple is released, THEN verify hoist position indicates less than 164 inches.

4.6.3.2 IF in the Fuel Pool AND grapple is engaged, THEN verify hoist is at Normal Up position.

4.6.3.3 IF above the core AND grapple is released, THEN verify hoist position indicates less than 530 inches.

4.6.3.4 IF above the core AND grapple is engaged, THEN verify hoist position indicates less than 355 inches.

4.6.4 Verify Bridge AND Trolley are within the Secure Travel Zone.

4.6.5 Verify Bridge AND Trolley are NOT in the Transfer Canal.

4.6.6 Touch "SELECT AUTO" on the Main OR Hoist screens.

4.6.7 IF during auto move selection it is desired to return to manual operation, THEN touch "SELECT MANUAL", OTHERWISE continue with this procedure subsection.

4.6.8 Touch "Manual Step Selection Active"/ "Auto Step Selection Active" as necessary to select "Manual Step Selection Active".

4.6.9 Touch "REQUEST" AND enter the desired location on the keypad screen.

4.6.10 IF requested location is correct, THEN touch "VERIFY"; OTHERWISE return to step 4.6.9.

4.6.11 Touch "AUTO RUN" to initiate Refueling Platform movement.

4.7 Full Automatic Operation

NOTES

1. The Refuel Platform computer does NOT recognize Fuel Pool Storage Rack locations outside the Secure Travel Zone, the Fuel Preparation Machines, Bundle Sipping Canisters OR Spent Fuel Storage Cask locations as valid locations for automatic moves.

2. An automatic move can be terminated at any time by performing one of the following:
   - touching "AUTO STOP" on the MAIN OR HOIST screen
   - deflecting any of the master joysticks
   - depressing "STOP" push button on START/STOP STATION
   - depressing "TRAVEL OVERRIDE" on RIGHT HAND CONTROLLER

****
* CAUTION *
*
* Operation in Full Automatic mode requires both Primary *
* AND Redundant encoders to be selected for each axis *
* in order to prevent collision of the mast OR handled *
* component in the event a single encoder fails(Ref. 6.5). *
****

4.7.1 IF desired to change mode of multiple axis automatic operation, THEN perform the following; OTHERWISE continue with step 4.7.2:

4.7.1.1 Touch "SHOW MENU".

4.7.1.2 Touch "XY/XY&Z MODE ACTIVE" as necessary to select the desired mode of multiple axis automatic operation.

4.7.1.3 Touch "PRESS FOR OPERATION".

4.7.2 IF operating in the XY mode, THEN perform the following, OTHERWISE continue with step 4.7.3 of this procedure:

4.7.2.1 IF in the Fuel Pool AND grapple is released, THEN verify hoist position indicates less than 164 inches.

4.7.2.2 IF in the Fuel Pool AND grapple is engaged, THEN verify hoist is at Normal Up position.

4.7.2.3 IF above the core AND grapple is released AND the requested location will be in the core, THEN verify hoist position indicates less than 530 inches.

4.7.2.4 IF above the core AND grapple is released AND the requested location will be in the Fuel Pool, THEN verify hoist position indicates less than 164 inches.

4.7.2.5 IF above the core AND grapple is engaged AND the requested location will be in the core, THEN verify hoist position indicates less than 355 inches.

4.7.2.6 IF above the core AND grapple is engaged AND the requested location will be in the Fuel Pool, THEN verify hoist is at Normal Up position.

4.7.3 IF operating in the XY&Z mode, THEN perform the following, OTHERWISE continue with step 4.7.4 of this procedure:

4.7.3.1 IF in the Fuel Pool AND grapple is released, THEN verify hoist position indicates less than 164 inches.

4.7.3.2 IF in the Fuel Pool AND grapple is engaged, THEN verify hoist is at Normal Up position.

4.7.3.3 IF above the core AND grapple is released, THEN verify hoist position indicates less than 530 inches.

4.7.3.4 IF above the core AND grapple is engaged, THEN verify hoist position indicates less than 355 inches.

4.7.4 Verify Bridge AND Trolley are within the Secure Travel Zone.

4.7.5 Verify Bridge AND Trolley are NOT in the Transfer Canal.

4.7.6 Touch "SELECT AUTO" on the Main OR Hoist screens.

4.7.7 IF during auto move selection it is desired to return to manual operation, THEN touch "SELECT MANUAL", OTHERWISE continue with this procedure subsection.

4.7.8 Touch "Manual Step Selection Active"/ "Auto Step Selection Active" as necessary to select "Auto Step Selection Active".

NOTE

The selected portion(PICKUP/SETDOWN) of the auto move to be performed is highlighted in green on the MOVE INFORMATION section of the screen. The requested location along with its bridge and trolley coordinates are displayed in a box on the bottom of the screen.

4.7.9 IF it is desired to select a particular step in the move sequence, THEN touch "SELECT NEW STEP NUMBER" AND enter desired step on the keypad screen.

4.7.10 IF it is desired to increment to the SETDOWN portion of a step OR the PICKUP portion of the next step in the sequence, THEN touch "INCREMENT STEP".

4.7.11 IF requested location is correct, THEN touch "VERIFY"; OTHERWISE return to step 4.7.9.

4.7.12 Touch "AUTO RUN" to initiate Refueling Platform movement.

4.8 Pickup Location - Fuel Pool Storage Rack

4.8.1 Position Refuel Platform Mast over desired core component in accordance with Core Component Transfer Authorization Sheet (CCTAS).

4.8.2 Lower hoist until grapple is 6 to 12 inches above bail.

4.8.3 Verify grapple is open.

4.8.4 Rotate grapple as necessary to achieve grapple to bail alignment.

4.8.5 Slowly lower hoist until "SLACK CABLE" light is lit.

NOTE

Steps 4.8.6 through 4.8.9 shall be double verified by the Fuel Handling Director (FHD) and Refuel Platform Operator (RPO) OR Fuel Handling Director and Spotter.

4.8.6 Verify proper core component location and orientation.

4.8.7 Verify the following, THEN inform FHD of grapple position.

4.8.7.1 Grapple is centered over bail handle

4.8.7.2 Hoist position indication agrees with Attachment 9 for item seated in Fuel Pool Storage Rack.

4.8.8 WHEN directed by FHD, THEN engage grapple, AND verify "GRAPPLE ENGAGED" light is lit.

4.8.9 WHEN directed by FHD, THEN slowly raise load AND verify "HOIST LOADED" light is lit (fuel only).

NOTE

WHEN accessing storage locations outside the Secure Travel Zone, use of the TRAVEL OVERRIDE push button is required to raise the hoist. Hoist slow speed zone near Normal Up will NOT be active. IF the hoist is fuel loaded, THEN raise motion will stop automatically WHEN the selected Normal Up setpoint is reached. IF the hoist is NOT fuel loaded(empty or blade guide), THEN raise motion will NOT stop automatically WHEN the selected Normal Up setpoint is reached and must be stopped by releasing the hoist joystick. IF the joystick is NOT released, THEN the hoist will raise until the first Overhoist Backup switch stops upward motion.

4.8.10 Continue raising until grapple is fully raised, THEN verify "GRAPPLE NORMAL UP" light is lit.

4.8.11 Perform appropriate "Set Down Location" subsection of this procedure as directed by FHD.

4.9 Pickup Location - Reactor Core

4.9.1 Position Refuel Platform Mast over desired core component in accordance with Core Component Transfer Authorization Sheet (CCTAS).

4.9.2 Lower hoist until grapple is 6 to 12 inches above bail.

NOTES

1. While the bridge is over the core, the grapple will only open when it is within 1 foot of the top of a bail. If the grapple is opened in the Fuel Pool it will remain open while over the core until the GRAPPLE switch is placed in the "ENGAGE" position.

2. If the GRAPPLE switch is placed in the "RELEASE" position while the bridge is over the core but the grapple is NOT within 1 foot of the top of a bail, the grapple will remain closed and the "GRAPPLE RELEASED ALARM" will sound. If the grapple is moved to within 1 ft of the top of a bail the grapple will NOT open until the switch is first placed in the "ENGAGE" position and then placed in the "RELEASE" position.

4.9.3 Verify grapple is open.

4.9.4 Rotate grapple as necessary to achieve grapple to bail alignment.

4.9.5 Slowly lower hoist until "SLACK CABLE" light is lit.

NOTE

Steps 4.9.6 through 4.9.10 (except 4.9.9) shall be double verified by the FHD and RPO OR FHD and Spotter.

4.9.6 Verify proper core component location and orientation.

4.9.7 Verify the following, THEN inform FHD of grapple position.

4.9.7.1 Grapple is centered over bail handle.

4.9.7.2 Hoist position indication agrees with Attachment 9 for item seated in core.

4.9.8 WHEN directed by FHD, THEN engage grapple, AND verify "GRAPPLE ENGAGED" light is lit.

4.9.9 IF load is a Fuel Bundle, THEN FHD shall inform Unit Reactor Operator of pending fuel removal from the core.

4.9.10 WHEN directed by FHD, THEN slowly raise load AND verify "HOIST LOADED" light is lit (fuel only).

4.9.11 Continue raising until core component is clear of core.

4.9.11.1 Verify hoist position indicates less than 355.0 inches.

4.9.11.2 Verify item is clear of top guide.

4.9.12 IF load is a Fuel Bundle, THEN FHD shall inform Unit Reactor Operator fuel bundle has cleared core.

4.9.13 IF load is to be transferred through Transfer Canal, THEN continue raising until grapple is fully raised AND verify "GRAPPLE NORMAL UP" light is lit.

4.9.14 Perform appropriate "Set Down Location" subsection of this procedure as directed by FHD.

4.10 Pickup Location - Fuel Preparation Machine

4.10.1 Verify Fuel Prep Machine carriage is fully lowered.

4.10.2 Position Refuel Platform Mast over fuel prep machine in accordance with Core Component Transfer Authorization Sheet (CCTAS).

4.10.3 Lower hoist until grapple is 6 to 12 inches above bail.

4.10.4 Verify grapple is open.

4.10.5 Rotate grapple as necessary to achieve grapple to bail alignment.

4.10.6 Slowly lower hoist until "SLACK CABLE" light is lit.

NOTE

Steps 4.10.7 through 4.10.10 shall be double verified by the FHD and RPO OR FHD and Spotter.

4.10.7 Verify proper core component location and orientation.

4.10.8 Verify the following, THEN inform FHD of grapple position.

4.10.8.1 Grapple is centered over bail handle

4.10.8.2 Hoist position indication agrees with Attachment 9 for item seated in fuel prep machine.

4.10.9 WHEN directed by FHD, THEN engage grapple, AND verify "GRAPPLE ENGAGED" light is lit.

4.10.10 WHEN directed by FHD, THEN slowly raise load AND verify "HOIST LOADED" light is lit (fuel only).

4.10.11 Continue raising until grapple is fully raised, THEN verify "GRAPPLE NORMAL UP" light is lit.

```
*****************************************************************
*                          CAUTION                              *
*                                                               *
*    Automatic modes shall NOT be used to perform moves while   *
*    mast is in a fuel preparation machine.                     *
*****************************************************************
```

4.10.12 Perform appropriate "Set Down Location" subsection of this procedure as directed by FHD.

4.11 Pickup Location - Bundle Sipping Canister

4.11.1 Verify Bundle Sipping Canister lid is open.

4.11.2 Position Refuel Platform Mast over desired Bundle Sipping Canister in accordance with Core Component Transfer Authorization Sheet (CCTAS).

4.11.3 Lower hoist until grapple is 6 to 12 inches above bail.

4.11.4 Verify grapple is open.

4.11.5 Rotate grapple as necessary to achieve grapple to bail alignment.

4.11.6 Slowly lower hoist until "SLACK CABLE" light is lit.

NOTES

1. Steps 4.11.7 through 4.11.10 shall be double verified by the FHD and RPO OR FHD and Spotter.

2. Expected hoist position is determined AND recorded on Attachment 9 by use of dummy bundle per Section 4.16.

4.11.7 Verify proper core component location and orientation.

4.11.8 Verify the following, THEN inform FHD of grapple position.

4.11.8.1 Grapple is centered over bail handle

4.11.8.2 Hoist position indication agrees with value posted on Attachment 9 for sipping canister in use.

4.11.9 WHEN directed by FHD, THEN engage grapple AND verify "GRAPPLE ENGAGED" light is lit.

****
* CAUTION *
*
* Use extreme care to avoid collision of fuel bundle *
* with open Sipping Canister lid. *
****

4.11.10 WHEN directed by FHD, THEN slowly raise load AND verify "HOIST LOADED" light is lit (fuel only).

4.11.11 Continue raising until grapple is fully raised, THEN verify "GRAPPLE NORMAL UP" light is lit.

4.11.12 Perform appropriate "Set Down Location" subsection of this procedure as directed by FHD.

4.12 Pickup Location - Spent Fuel Storage Cask

4.12.1 Position Refuel Platform Mast over desired core component in accordance with Core Component Transfer Authorization Sheet (CCTAS).

4.12.2 Lower hoist until grapple is 6 to 12 inches above bail.

4.12.3 Verify grapple is open.

4.12.4 Rotate grapple as necessary to achieve grapple to bail alignment.

4.12.5 Slowly lower hoist until "SLACK CABLE" light is lit.

> NOTE
>
> Steps 4.12.6 through 4.12.9 shall be double verified by the FHD and RPO OR FHD and Spotter.

4.12.6 Verify proper core component location and orientation.

4.12.7 Verify the following, THEN inform FHD of grapple position.

4.12.7.1 Grapple is centered over bail handle.

4.12.7.2 Hoist position indication agrees with Attachment 9 for item seated in Cask.

4.12.8 WHEN directed by FHD, THEN engage grapple, AND verify "GRAPPLE ENGAGED" light is lit.

4.12.9 WHEN directed by FHD, THEN slowly raise load AND verify "HOIST LOADED" light is lit.

4.12.10 Continue raising until grapple is fully raised, THEN verify "GRAPPLE NORMAL UP" light is lit.

4.12.11 Perform appropriate "Set Down Location" subsection of this procedure as directed by FHD.

4.13 Set Down Location - Fuel Pool Storage Rack

4.13.1 Position core component over desired location in accordance with Core Component Transfer Authorization Sheet (CCTAS).

4.13.2 Rotate core component as necessary to achieve proper orientation.

4.13.3 Perform Double Verification to ensure proper core component location and orientation.

NOTES

1. Tooling may be utilized as necessary to guide a bent channel fastener into the spent fuel rack.

2. WHEN accessing storage locations outside the Secure Travel Zone, THEN use of the TRAVEL OVERRIDE push button is required to lower OR raise the hoist. Hoist slow speed zones near rack entrance, seating AND Normal Up will NOT be active.

4.13.4 WHEN directed by FHD, THEN lower load until "SLACK CABLE" light is lit.

NOTE

Steps 4.13.5 through 4.13.7 shall be double verified by the FHD and RPO OR FHD and Spotter.

4.13.5 Verify the following, THEN inform FHD of grapple position.

4.13.5.1 Component elevation appears equivalent to other stored components in the rack.

4.13.5.2 Hoist position indication agrees with Attachment 9 for item seated in Fuel Pool Storage Rack.

4.13.6 WHEN directed by FHD, THEN release grapple, AND verify grapple is open.

4.13.7 Slowly raise hoist while verifying "HOIST LOADED" light remains OFF.

4.13.8 Record completion of component transfer on CCTAS.

4.14 Set Down Location - Reactor Core

4.14.1 Position core component over desired location in accordance with Core Component Transfer Authorization Sheet (CCTAS).

4.14.2 Lower load until hoist position indicates approximately 355 inches, THEN stop lowering.

4.14.3 Rotate core component as necessary to achieve proper orientation.

4.14.4 Perform Double Verification to ensure proper core component location and orientation.

4.14.5 IF load is a fuel bundle, THEN FHD shall inform Unit Reactor Operator of pending fuel insertion in core.

> NOTE
>
> Fuel bundle may contact CRBs at two elevations approximately 385 inches and 400 inches hoist encoder position.

4.14.6 WHEN directed by FHD, THEN lower load until "SLACK CABLE" light is lit.

> NOTE
>
> Steps 4.14.7 through 4.14.9 shall be double verified by the FHD and RPO OR FHD and Spotter.

4.14.7 Verify the following, THEN inform FHD of grapple position.

4.14.7.1 Component elevation appears equivalent to other components in the Reactor Core.

4.14.7.2 Hoist position indication agrees with Attachment 9 for item seated in Reactor Core.

4.14.8 WHEN directed by FHD, THEN release grapple, AND verify grapple is open.

4.14.9 Slowly raise hoist while verifying "HOIST LOADED" light remains OFF.

4.14.10 Record completion of component transfer on CCTAS.

4.14.11 IF load was a fuel bundle, THEN FHD shall inform Unit Reactor Operator of completion of fuel insertion in core.

4.15 Set Down Location - Fuel Preparation Machine

4.15.1 Verify Fuel Prep Machine carriage is fully lowered.

4.15.2 Position component over desired fuel prep machine in accordance with Core Component Transfer Authorization Sheet (CCTAS).

4.15.3 Rotate core component as necessary to achieve proper orientation.

4.15.4 Perform Double Verification to ensure proper core component location and orientation.

4.15.5 WHEN directed by FHD, THEN lower load until "SLACK CABLE" light is lit.

> NOTE
>
> Steps 4.15.6 through 4.15.8 shall be double verified by the FHD and RPO OR FHD and Spotter.

4.15.6 Verify Hoist position indication agrees with Attachment 9 for item seated in fuel prep machine, THEN inform FHD of grapple position.

4.15.7 WHEN directed by FHD, THEN release grapple, AND verify grapple is open.

4.15.8 Slowly raise hoist while verifying "HOIST LOADED" light remains OFF.

4.15.9 Record completion of component transfer on CCTAS.

4.16 Set Down Location - Bundle Sipping Canister

****
* CAUTION *
*
* Use extreme care to avoid collision of fuel bundle *
* with open Sipping Canister lid. *
****

4.16.1 Verify Bundle Sipping Canister lid is open.

> NOTE
>
> The following step determines the expected hoist position for use of sipping canisters. It shall be performed one time for each sipping canister to be used. Reactor Engineering can provide information on dummy bundle location.

4.16.2 Obtain and record hoist position of bundle seated in sipping canister.

4.16.2.1 Fuel Handling Director and Refuel Platform Operator or Spotter, verify DUMMY fuel bundle location.

4.16.2.2 Grapple and raise DUMMY bundle in accordance with Section 4.8.

4.16.2.3 Position DUMMY bundle over sipping canister and rotate bundle to achieve alignment.

4.16.2.4 WHEN directed by FHD, THEN slowly lower load until "SLACK CABLE" light is lit.

4.16.2.5 Using underwater camera, verify bundle is fully seated in sipping canister.

> NOTE
>
> The range(target hoist position) for a fuel bundle seated in a Bundle Sipping Canister(refer to Attachment 9) is calculated by subtracting 1.5 inches from, AND adding 0.5 inches to, the hoist position indication obtained below.

4.16.2.6 Record hoist position AND calculate the range for each Bundle Sipping Canister below:

SIPPING CANISTER ID/ LOCATION	HOIST POSITION INDICATION	RANGE
1. _____	_____	_____-_____
2. _____	_____	_____-_____

4.16.2.7 Perform appropriate steps in Sections 4.11 and 4.13 to store DUMMY bundle in Fuel Pool Storage Rack location in AS-FOUND position.

4.16.2.8 Record the ID/Location AND Range for each Sipping Canister on the copy of Attachment 9 posted on the Refueling Platform mast.

4.16.3 Position fuel bundle over desired bundle sipping canister in accordance with Core Component Transfer Authorization Sheet (CCTAS).

4.16.4 Rotate fuel bundle as necessary to achieve proper insertion alignment.

4.16.5 Perform Double Verification to ensure proper core component location and orientation.

4.16.6 WHEN directed by FHD, THEN lower load until "SLACK CABLE" light is lit.

NOTE

Steps 4.16.7 through 4.16.9 shall be double verified by the FHD and RPO OR FHD and Spotter.

4.16.7 Verify the following, THEN inform FHD of grapple position.

4.16.7.1 Fuel Bundle is fully seated in the Bundle Sipping Canister

4.16.7.2 Hoist position indication agrees with value posted on Attachment 9 for sipping canister in use.

4.16.8 WHEN directed by FHD, THEN release grapple, AND verify grapple is open.

4.16.9 Slowly raise hoist while verifying "HOIST LOADED" light remains OFF.

4.16.10 Record completion of component transfer on CCTAS.

4.17 Set Down Location - Spent Fuel Storage Cask

4.17.1 Position core component over desired location in accordance with Core Component Transfer Authorization Sheet(CCTAS).

4.17.2 Lower load until hoist indicates approximately 10 inches, THEN stop lowering.

4.17.3 Rotate core component as necessary to achieve proper orientation.

4.17.4 Perform double verification to ensure proper core component location AND orientation.

4.17.5 WHEN directed by FHD, THEN lower load until "SLACK CABLE" light is lit.

> NOTE
>
> Steps 4.17.6 through 4.17.8 shall be double verified by the FHD and RPO OR FHD and Spotter.

4.17.6 Verify the following, THEN inform FHD of grapple position.

4.17.6.1 Component elevation appears equivalent to other stored components in the cask.

4.17.6.2 Hoist position indication agrees with Attachment 9 for an item seated in cask.

4.17.7 WHEN directed by FHD, THEN release grapple AND verify grapple is open.

4.17.8 Slowly raise hoist while verifying "HOIST LOADED" light remains OFF.

4.17.9 Record completion of component transfer on CCTAS.

5.0 CONTROL STATIONS

5.1 20C950A, "U/2 Refueling Platform Left Hand Controller"

5.2 20C950B, "U/2 Refueling Platform Right Hand Controller"

5.3 HS-2-18-20S006, "U/2 Refueling Platform Start/Stop Station"

5.4 XC-80832 "U/2 Refueling Platform Operator Interface Console"

6.0 REFERENCES

6.1 M-1-M-631, U/2 GE Refueling Platform Instruction Manual, Volume I

6.2 M-1-M-632, U/2 GE Refueling Platform Instruction Manual, Volume II

6.3 326-P-VC-38, 39, 45, PBAPS Refueling Platform Instruction Manual Units 2 and 3

6.4 PECO Fuel Handling (FH) Procedures

6.5 10CFR50.59 Safety Evaluation for MOD P00758 Refueling Platform Controls Upgrade(ECR 98-02407)

6.6 INPO OE 7535, Failed Fuel Bundle at Oyster Creek

6.7 SIL 594, "Refuel Platform Triangular Mast Drag Loading"

6.8 ECR PB 98-02612, MOD P00758 Refueling Platform Controls Upgrade

6.9 ECR PB 99-00352, Modify Refueling Interlocks to Eliminate Main Hoist Not Normal Up Interlock

6.10 AR A1238197e01, Mod P758 Procedure Strategy Notes for SO 18.1.A-2(3)

7.0 TECHNICAL SPECIFICATION

7.1 Section 3.9.1

8.0 INTERFACING PROCEDURES

8.1 FH-6C, "Core Component Movement - Core Transfers"

8.2 FH-35, "Control of Material Movement in the Fuel Pool"

8.3 RE-C-40, "Core Component Transfer Authorization Sheet Generation and Administration"

8.4 SO 18.1.C-2, "Electrical, Mechanical and Pneumatic Alignment/Checkout of Refueling Platform"

8.5 SO 18.2.A-2, "Shutdown of Refueling Platform"

8.6 SO 18.7.G-2, "Refueling Platform Overrides and Bypasses"

8.7 SO 18.7.F-2, "Handwheel Operation of Refueling Platform Bridge, Trolleys and Hoists"

9.0 ATTACHMENTS

1. Interlock Status Display Annunciators
2. Main Screen Annunciators
3. Hoist Screen Annunciators
4. Auto Screen Annunciators
5. Hoist Condition By Elevation
6. Secure Travel Zone Description
7. Bridge And Trolley Zone Enforcement
8. Main Hoist Speed Zones
9. Hoist Encoder Position Ranges

ATTACHMENT 1

INTERLOCK STATUS DISPLAY ANNUNCIATORS

ANNUNCIATOR	INITIATING CONDITIONS	EFFECT ON OPERATIONS
ROD BLK INTERLK #1 (ROD BLOCK INTERLOCK #1)	BRIDGE NEAR OR OVER CORE AND ANY HOIST FUEL LOADED (See Note)	CONTROL ROD WITHDRAWAL BLOCK (RMCS), ROD WITHDRAW BLOCK ANNUNCIATOR - MCR, WHITE WITHDRAW PERMIT LIGHT OFF - MCR
BRIDGE REVERSE STOP #1	BRIDGE NEAR OR OVER CORE AND ANY HOIST FUEL LOADED AND NOT ALL RODS FULL IN	NO BRIDGE REVERSE MOTION
ROD BLK INTERLK #2 (ROD BLOCK INTERLOCK #2)	BRIDGE NEAR OR OVER CORE AND RX MODE SW NOT IN REFUEL OR ROD NOT SELECTED	CONTROL ROD WITHDRAWAL BLOCK (RMCS), ROD WITHDRAW BLOCK ANNUNCIATOR - MCR, WHITE WITHDRAW PERMIT LIGHT OFF - MCR
BRIDGE REVERSE STOP #2		NO BRIDGE REVERSE MOTION
FUEL HOIST INTERLK (FUEL HOIST INTERLOCK)	BRIDGE NEAR OR OVER CORE AND NOT ALL RODS FULL IN	MAIN HOIST INOPERATIVE
MONO HOIST INTERLK (MONO HOIST INTERLOCK)	BRIDGE NEAR OR OVER CORE AND NOT ALL RODS FULL IN AND APPLICABLE HOIST FUEL LOADED	MONO AUX HOIST INOPERATIVE
FRAME HOIST INTERLK (FRAME HOIST INTERLOCK)		FRAME AUX HOIST INOPERATIVE
FAULT LOCKOUT	MOTOR THERMAL OL - HOIST, BRIDGE, TROLLEY OPER CHECK TIMER - HOIST, BRIDGE, TROLLEY MOTOR DRIVE FAULT - HOIST, BRIDGE, TROLLEY ENCODER COMPARE ERROR - HOIST, BRIDGE, TROLLEY MAIN HOIST OVERSPEED PHASE LOSS MAIN CONTROL POWER OFF CABINET DOOR OPEN ON TROLLEY DECK VARIABLE SPEED SWITCHES NOT IN NEUTRAL DURING STARTUP	BRIDGE WILL NOT OPERATE NO BRIDGE, TROLLEY, HOIST MOTION GRAPPLES FAIL CLOSED
TEST IN PROG (TEST IN PROGRESS)	TEST BOX CONNECTED OR TESTING SCREEN ACTIVE	VARIABLE - DEPENDS ON TEST BUTTON POSITION
BACKUP HOIST LIMIT	MAIN HOIST TRAVEL TO APPROX. 1" ABOVE CASK LOADING NORMAL UP(OVERHOIST BACKUP SWITCH #1) OR APPROX. 11" ABOVE CASK LOADING NORMAL UP(OVERHOIST BACKUP SWITCH #2)	FURTHER MAIN HOIST RAISING PROHIBITED

NOTE: Depressing "STOP" push button with bridge near or over the core will also initiate a Rod Block Interlock #1.

ATTACHMENT 2

MAIN SCREEN ANNUNCIATORS

ANNUNCIATOR	INITIATING CONDITIONS	EFFECT ON OPERATIONS
TRAVEL OVERRIDE ACTIVATED (flashing)	TRAVEL OVERRIDE button activated	Bridge/Trolley/Hoist motion permitted at slow speed
SAFETY TRAVEL INTERLOCK	Bridge/Trolley outside Secure Travel Zone	NO Bridge/Trolley/Hoist motion
PLC OVERRIDE ACTIVE	PLC/COMPUTER OVERRIDE key switch in OVERRIDE position	All PLC functions/interlocks bypassed. Bridge/Trolley/Hoist motion at slow speed.
3" MOTION INTERLOCK HAS BEEN EXCEEDED	Bridge AND/OR Trolley moved more than 3" with the hoist lowered during component insertion	NO further motion in offending direction [TRAVEL OVERRIDE can be used to realign the Bridge/Trolley]
PHASE LOSS DETECTED	Loss of one OR more phases of incoming 480V power	NO Bridge/Trolley/Hoist motion (Will also result in a FAULT LOCKOUT)
CONSOLE TEMPERATURE ALARM	High temperature in the Trolley Control Cabinet, Trolley PLC Cabinet, OR Operator Interface Console	None - alarm only
FAULT OVERRIDE KEYSWITCH ACTIVATED (flashing)	FAULT OVERRIDE key switch turned to OVERRIDE position	Fault Lockout circuit bypassed. Fault conditions will NOT be annunciated via a FAULT LOCKOUT. However, FAULT CONDITION OVERRIDDEN annunciator will appear when a fault condition occurs.
FAULT CONDITION OVERRIDDEN	FAULT OVERRIDE key switch turned to OVERRIDE position concurrent with a valid Fault condition	Fault Lockout circuit bypassed. New fault conditions will NOT be annunciated.
SECURE TRAVEL ZONE BYPASSED (flashing)	Secure Travel Zone bypassed on UTILITIES screen	NO Secure Travel Zone enforcement
A PLC I/O FAULT HAS BEEN DETECTED	A PLC I/O module is NOT responding to commands from the CPU, OR the PLC configuration file detects a module has been removed	Variable - depends on the affected module
COMMUNICATION TO THE PLC HAS BEEN LOST	Loss of communication between the PC AND the PLC	NO further screen updates [Refueling Platform operation may continue in manual mode]
HOIST IS LOADED AND NOT AT THE CASK LOADING UP LIMIT	Bridge AND/OR trolley attempting to enter the Cask Zone when fuel loaded AND NOT at the Cask Loading Normal Up limit with Cask Loading Up Limit selected	NO Bridge/Trolley/Hoist motion

ATTACHMENT 2(cont.)

MAIN SCREEN ANNUNCIATORS

ANNUNCIATOR	INITIATING CONDITIONS	EFFECT ON OPERATIONS
ROD BLOCK INTERLOCK #1	BRIDGE NEAR OR OVER CORE AND ANY HOIST FUEL LOADED	CONTROL ROD WITHDRAWAL BLOCK (RMCS), ROD WITHDRAW BLOCK ANNUNCIATOR - MCR, WHITE WITHDRAW PERMIT LIGHT OFF - MCR
BRIDGE REVERSE STOP #1	BRIDGE NEAR OR OVER CORE AND ANY HOIST FUEL LOADED AND NOT ALL RODS FULL IN	NO BRIDGE REVERSE MOTION
ROD BLOCK INTERLOCK #2	BRIDGE NEAR OR OVER CORE AND RX MODE SW NOT IN REFUEL OR ROD NOT SELECTED	CONTROL ROD WITHDRAWAL BLOCK (RMCS), ROD WITHDRAW BLOCK ANNUNCIATOR - MCR, WHITE WITHDRAW PERMIT LIGHT OFF - MCR
BRIDGE REVERSE STOP #2	BRIDGE NEAR OR OVER CORE AND RX MODE SW NOT IN REFUEL OR ROD NOT SELECTED	NO BRIDGE REVERSE MOTION
FUEL HOIST INTERLOCK	BRIDGE NEAR OR OVER CORE AND NOT ALL RODS FULL IN	MAIN HOIST INOPERATIVE
MONO HOIST INTERLOCK	BRIDGE NEAR OR OVER CORE AND NOT ALL RODS FULL IN AND MONO HOIST FUEL LOADED	MONO AUX HOIST INOPERATIVE
FRAME HOIST INTERLOCK	BRIDGE NEAR OR OVER CORE AND NOT ALL RODS FULL IN AND FRAME HOIST FUEL LOADED	FRAME AUX HOIST INOPERATIVE
FAULT DETECTED	MOTOR THERMAL OL - HOIST, BRIDGE, TROLLEY OPER CHECK TIMER - HOIST, BRIDGE, TROLLEY MOTOR DRIVE FAULT - HOIST, BRIDGE, TROLLEY ENCODER COMPARE ERROR - HOIST, BRIDGE, TROLLEY MAIN HOIST OVERSPEED PHASE LOSS MAIN CONTROL POWER OFF CABINET DOOR OPEN ON TROLLEY DECK VARIABLE SPEED SWITCHES NOT IN NEUTRAL DURING STARTUP	BRIDGE WILL NOT OPERATE NO BRIDGE, TROLLEY, HOIST MOTION GRAPPLES FAIL CLOSED

ATTACHMENT 3

HOIST SCREEN ANNUNCIATORS

Annunciator	Initiating Conditions	Effect on Operations
TRAVEL OVERRIDE ACTIVATED (flashing)	TRAVEL OVERRIDE button activated	Bridge/Trolley/Hoist motion permitted at slow speed
SAFETY TRAVEL INTERLOCK	Bridge/Trolley outside Secure Travel Zone	NO Bridge/Trolley/Hoist motion
PLC OVERRIDE ACTIVE	PLC/COMPUTER OVERRIDE key switch in OVERRIDE position	All PLC functions/interlocks bypassed. Bridge/Trolley/Hoist motion at slow speed.
3" MOTION INTERLOCK HAS BEEN EXCEEDED	Bridge AND/OR Trolley moved more than 3" with the hoist lowered during component insertion	NO further motion in offending direction [TRAVEL OVERRIDE can be used to realign Bridge/Trolley]
PHASE LOSS DETECTED	Loss of one OR more phases of incoming 480V power	NO Bridge/Trolley/Hoist motion (Will also result in a FAULT LOCKOUT)
CONSOLE TEMPERATURE ALARM	High temperature in the Trolley Control Cabinet, Trolley PLC Cabinet, OR Operator Interface Console	None - alarm only
FAULT OVERRIDE KEYSWITCH ACTIVATED (flashing)	FAULT OVERRIDE key switch turned to OVERRIDE position	Fault Lockout circuit bypassed. Fault conditions will NOT be annunciated via a FAULT LOCKOUT. However, FAULT CONDITION OVERRIDDEN annunciator will appear when a fault condition occurs.
FAULT CONDITION OVERRIDDEN	FAULT OVERRIDE key switch turned to OVERRIDE position concurrent with a valid Fault condition	Fault Lockout circuit bypassed. New fault conditions will not be annunciated.
HOIST NOT IN PERMISSIVE ZONE	Hoist outside Secure Travel Zone	NO Hoist motion. NO Bridge/Trolley motion in offending direction.
SECURE TRAVEL ZONE BYPASSED (flashing)	Secure Travel Zone bypassed on UTILITIES screen	NO Secure Travel Zone enforcement
A PLC I/O FAULT HAS BEEN DETECTED	A PLC I/O module is NOT responding to commands from the CPU, OR the PLC configuration file detects a module has been removed	Variable - depends on the affected module
ROD BLOCK INTERLOCK #1	BRIDGE NEAR OR OVER CORE AND ANY HOIST FUEL LOADED	CONTROL ROD WITHDRAWAL BLOCK (RMCS), ROD WITHDRAW BLOCK ANNUNCIATOR - MCR, WHITE WITHDRAW PERMIT LIGHT OFF - MCR
BRIDGE REVERSE STOP #1	BRIDGE NEAR OR OVER CORE AND ANY HOIST FUEL LOADED AND NOT ALL RODS FULL IN	NO BRIDGE REVERSE MOTION
ROD BLOCK INTERLOCK #2	BRIDGE NEAR OR OVER CORE AND RX MODE SW NOT IN REFUEL OR ROD NOT SELECTED	CONTROL ROD WITHDRAWAL BLOCK (RMCS), ROD WITHDRAW BLOCK ANNUNCIATOR - MCR, WHITE WITHDRAW PERMIT LIGHT OFF - MCR
COMMUNICATION TO THE PLC HAS BEEN LOST	Loss of communication between the PC AND the PLC	NO further screen updates [Refueling Platform operation may continue in manual mode]

ATTACHMENT 3(Cont.)

HOIST SCREEN ANNUNCIATORS

Annunciator	Initiating Conditions	Effect on Operations
HOIST IS LOADED AND NOT AT THE CASK LOADING UP LIMIT	Bridge AND/OR trolley attempting to enter the Cask Zone when fuel loaded AND NOT at the Cask Loading Normal Up limit with Cask Loading Up Limit selected	NO Bridge/Trolley/Hoist motion
THERE IS A CONFLICT BETWEEN THE PLC AND EXTERNAL FUEL HOIST LOADED CONDITIONS	Set point module SP-MHL indicates main hoist is fuel loaded and analog load input to PLC indicates NOT fuel loaded, OR vice-versa	None [Evaluate operability of refueling interlocks]
GRAPPLE RELEASE INTERLOCK	Grapple switch in release position AND 1) main hoist fuel loaded, OR 2) hoist NOT within 12" of fuel seated in the core	Main hoist grapple will NOT release; GRAPPLE RELEASED ALARM will sound on Right Hand Controller.
HOIST RAISE LOCKOUT	Main hoist fuel loaded AND grapple limit switches indicate grapple open	NO main hoist raise motion
MAST ORIENTATION CONFLICT	Mast NOT oriented correctly based on fuel move sequence file AND mast orientation during component pickup, with hoist below Mast Orientation Interlock active elevation	NO main hoist lower motion
MAST ORIENTATION INTERLOCK IS BYPASSED	MAST ORIENTATION INTERLOCK is bypassed on UTILITIES screen	Mast Orientation Interlock NOT functional
BRIDGE REVERSE STOP #2	BRIDGE NEAR OR OVER CORE AND RX MODE SW NOT IN REFUEL OR ROD NOT SELECTED	NO BRIDGE REVERSE MOTION
FUEL HOIST INTERLOCK	BRIDGE NEAR OR OVER CORE AND NOT ALL RODS FULL IN	MAIN HOIST INOPERATIVE
FAULT DETECTED	MOTOR THERMAL OL - HOIST, BRIDGE, TROLLEY OPER CHECK TIMER - HOIST, BRIDGE, TROLLEY MOTOR DRIVE FAULT - HOIST, BRIDGE, TROLLEY ENCODER COMPARE ERROR - HOIST, BRIDGE, TROLLEY MAIN HOIST OVERSPEED PHASE LOSS MAIN CONTROL POWER OFF CABINET DOOR OPEN ON TROLLEY DECK VARIABLE SPEED SWITCHES NOT IN NEUTRAL DURING STARTUP	BRIDGE WILL NOT OPERATE NO BRIDGE, TROLLEY, HOIST MOTION GRAPPLES FAIL CLOSED
OVERHOIST BACKUP LIMIT #1	MAIN HOIST TRAVEL TO APPROX. 1" ABOVE CASK LOADING NORMAL UP	FURTHER MAIN HOIST RAISING PROHIBITED
OVERHOIST BACKUP LIMIT #2	MAIN HOIST TRAVEL TO APPROX. 11" ABOVE CASK LOADING NORMAL UP	FURTHER MAIN HOIST RAISING PROHIBITED
MAIN HOIST MOTION ERROR	Hoist motion was commanded in one direction AND hoist moved more than 2" from its starting point in other direction	NO hoist motion until condition acknowledged

ATTACHMENT 4

AUTO SCREEN ANNUNCIATORS

Annunciator	Initiating Conditions	Effect on Operations
YOU HAVE REQUESTED AN INVALID LOCATION	A location was requested which does NOT exist in the location database	CANNOT auto move to requested location
SEMI-AUTOMATIC IS NOT PERMISSIVE OR AUTOMATIC IS NOT PERMISSIVE	Automatic move requested which requires movement through Transfer Canal AND: 1) hoist NOT at Normal Up with grapple closed, OR 2) hoist position NOT less than 164" with grapple open	Auto move will NOT be executed
REQUEST PROHIBITED GATE IS INSTALLED	Bridge in pool AND auto move requested to core AND Refueling gate indicated as installed during LOGON	Auto move will NOT be executed

ATTACHMENT 5

HOIST CONDITION BY ELEVATION

Hoist Condition:	HOIST ENCODER VALUE:
Refueling Normal Up Limit:	0.00
Cask Loading Normal Up Limit	-6.00
Full Down Limit in Core:	553.00
Full Down Limit in Pool:	190.00
Full Down Limit at Prep Machines:	170.00
Full Down Limit in Cask area (Refueling Normal Up selected):	360.00
Full Down Limit in Cask area (Cask Loading Normal Up selected):	190.00
Set down of First Mast Section:	175.00
Set down of Second Mast Section:	372.00
Core Clear Grapple Closed:	< 355.00
Core Clear Grapple Open:	< 530.00
Racks Clear Grapple Closed:	Normal Up
Racks Clear Grapple Open:	< 164.00
Canal Clear Grapple Closed:	Normal Up
Canal Clear Grapple Open:	< 164.00
Cask Clear Fuel Loaded (Note: Only effective if Cask Loading Normal Up limit is selected):	< -6.00
Cask Clear Grapple Open:	< 164.00
Fuel entry slow zone core:	365.00 to 400.00
Fuel entry slow zone pool racks:	12.00 to 26.00
Fuel entry slow zone cask area:	14.00 to 28.00
Fuel seating slow limit core:	> 536.00
Fuel seating slow limit pool racks:	> 177.00
Fuel seating slow limit cask area (Note: Only effective if Cask Loading Normal Up limit is selected):	> 177.00
Mast Orientation Interlock Active-Core:	> 365.00
Mast Orientation Interlock Active-Pool:	> 7.00
Grapple Release Zone in Core:	> 536.00

Note: Encoder values are approximate.

ATTACHMENT 6

SECURE TRAVEL ZONE DESCRIPTION

The PLC receives inputs from the bridge, trolley and hoist encoders, TRAVEL OVERRIDE push button, and grapple open/closed indication and compares that information with the defined areas or zone.

SECURE TRAVEL ZONE

The Secure Travel Zone for the bridge and trolley consists of two zones, one slightly smaller than the other. The smaller zone is the high speed zone which allows the bridge, trolley and main hoist to operate at their designed full speeds. The larger of the zones is the slow speed zone and slows the bridge and trolley speeds to 5 FPM until the Secure Travel Zone limit is reached activating the SAFETY TRAVEL INTERLOCK which stops the refueling platform.

The TRAVEL OVERRIDE push button is to allow further travel beyond the Secure Travel Zone or to travel back into the Secure Travel Zone at maximum speed of 5 FPM.

High speed zones and slow speed zones exist in the core, Transfer Canal and Fuel Pool(see attachment 7). If, during log on, the question "IS THE REFUELING GATE INSTALLED?" is answered yes, the refueling platform will be limited to the Pool Zone. The Canal Zone will no longer be accessible from the pool.

Main Hoist permissive zone for entrance into the Transfer Canal is dependent on whether the grapple is open OR closed. IF the grapple is open, THEN the hoist position must be less than 164 inches. IF the grapple is closed, THEN the hoist must be at Normal Up position.

Bridge and trolley speed are limited to 2 FPM whenever the hoist is not at a "clear" elevation, depending on grapple status - see Attachment 5.

A zone in front of the East fuel prep machine enables the refueling bridge and trolley to drive into the prep machine WITHOUT the use of the Travel Override button. The bridge and trolley are limited to 5 FPM but the hoist may operate at 40 FPM. Travel Override is required to access the West fuel prep machine, but once in the prep zone, Travel Override is not required and bridge, trolley and hoist motion are the same as for the East prep machine.

The cask zones include the Cask Buffer Zone and the Cask Zone. They are in effect only when the Cask Loading Normal Up limit has been selected. The Cask Buffer Zone is an "L" shaped area just outside the cask pit where the racks end. Bridge and trolley motion will stop in this zone if the hoist is fuel loaded and NOT at the Cask Loading Normal Up limit. The bridge and trolley are limited to 30 FPM but the hoist may operate at 40 FPM.

The Cask Zone is still within the Pool Zone limits, with the Secure Travel Zone being defined by the Pool Zone limits. The bridge and trolley are limited to 30 FPM but the hoist may operate at 40 FPM.

ATTACHMENT 6(cont.)

HOIST AND GRAPPLE ZONES

Hoist speed is dependent on bridge and trolley position and grapple elevation. Hoist speed zones while in the Secure Travel Zone are shown on attachment 8. The hoist, while outside of the Secure Travel Zone is limited to a maximum of 10 FPM. The Grapple Full Down light will illuminate while outside of the Secure Travel Zone because the down limit is zone-dependent. The JOG LOWER speed is 2 FPM. Grapple release is prohibited if the bridge and trolley are over the core with the grapple engaged and hoist is NOT within 12 inches from the top of fuel seated in the core. This is known as the Grapple Release Zone(GRZ).

ATTACHMENT 7

BRIDGE AND TROLLEY ZONE ENFORCEMENT

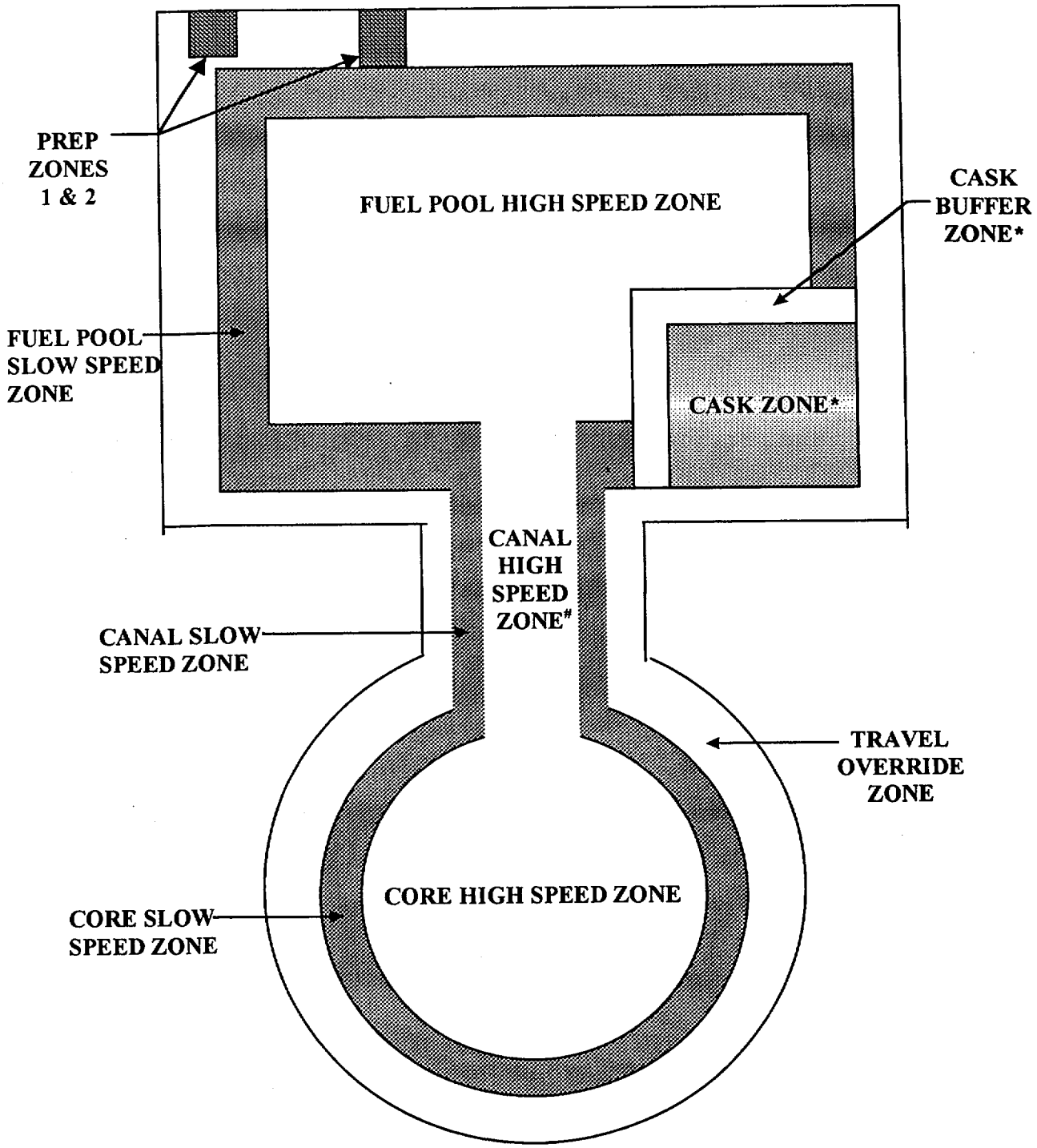

SECURE TRAVEL ZONE INCLUDES BOTH THE SLOW AND HIGH SPEED ZONES

*** IN EFFECT ONLY WHEN CASK LOADING NORMAL UP HAS BEEN SELECTED.**

 # APPLIES TO BRIDGE ONLY; TROLLEY OPERATES AT SLOW SPEED IN THIS ZONE

ATTACHMENT 8

MAIN HOIST SPEED ZONES

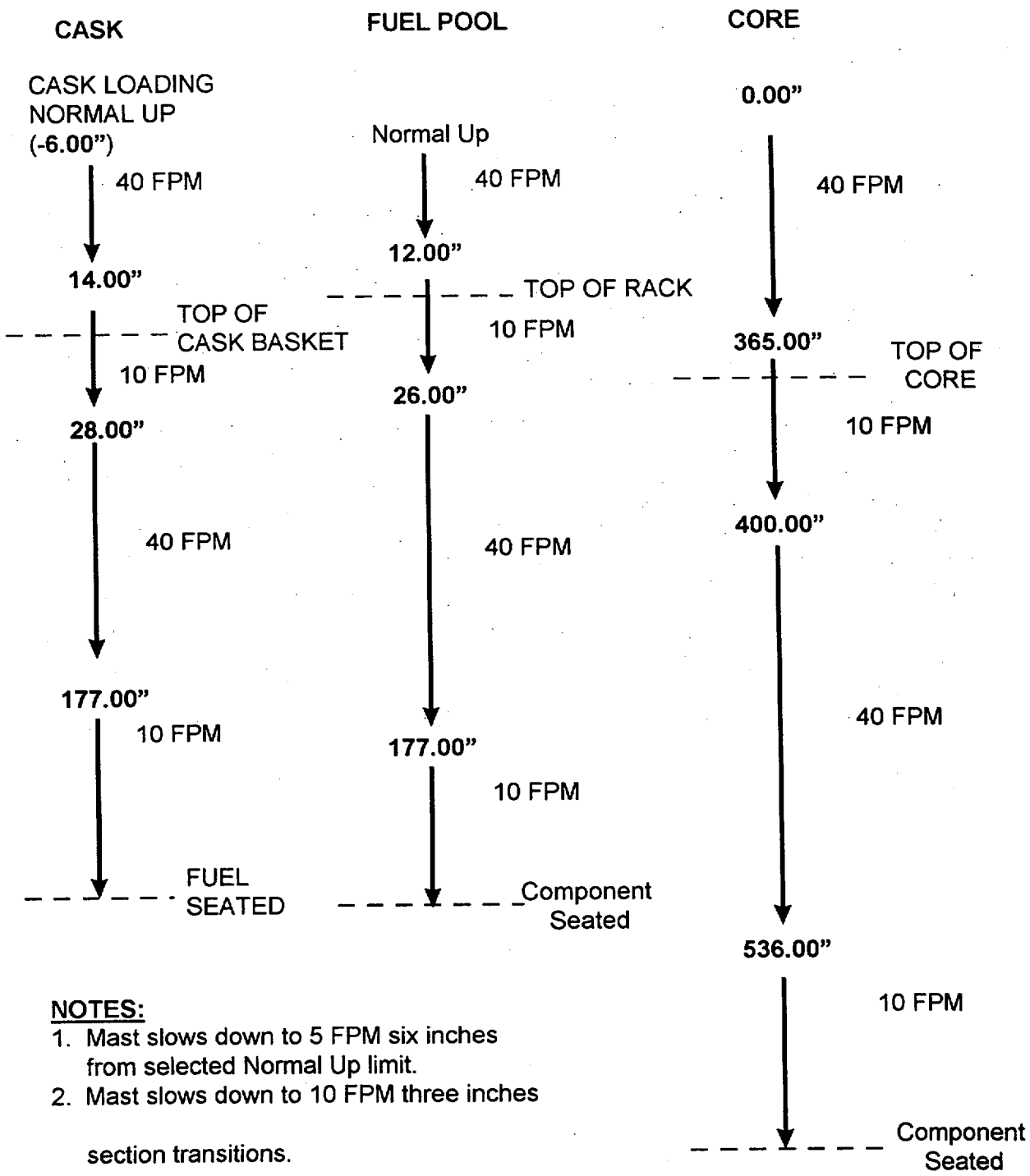

NOTES:

1. Mast slows down to 5 FPM six inches from selected Normal Up limit.
2. Mast slows down to 10 FPM three inches section transitions.

All hoist speeds indicated are at maximum joystick deflection. Actual hoist speed for a given zone is variable up to the maximum, dependent on the amount of joystick deflection. All zones are approximate encoder readings

ATTACHMENT 9

HOIST ENCODER POSITION RANGES

	Range
Fuel or SBG* Entering Rack	17.0" - 19.0"
Fuel or SBG* Seated in Rack	186.5" - 188.5"
Fuel Entering Cask	17.5" - 19.5"
Fuel Seated in Cask	183.5" - 185.5"
Fuel or SBG* Entering Core	369.0" - 371.0"
Fuel or SBG* Seated in Core	548.0" - 550.0"
DBG** Entering Rack	11.5" - 13.5"
DBG** Seated in Rack	177.5" - 184.5"
DBG** Entering Core	367.0" - 369.0"
DBG** Seated in Core	543.7" - 548.7"
DBG** Stacked in Core	As determined acceptable by FHD
Bundle in FPM (Full Down)	166.5" - 168.5"
Bundle in FPM (Full Down with GE fuel inspection fixture installed)	159.2" - 161.2"
Bottom of Cask Pit	364.5" - 366.5"
Bundle Seated in Bundle Sipping Canister:_____ ID/Location	_____" - _____"
Bundle Seated in Bundle Sipping Canister:_____ ID/Location	_____" - _____"
Permissive for entrance into Transfer Canal with grapple open	< 164.00"
Permissive for entrance into Transfer Canal with grapple closed	Normal Up

* SBG = Single Blade Guide
** DBG = Double Blade Guide

FOR TRAINING PURPOSES ONLY

PECO Energy Company
Peach Bottom Unit 3

SO 18.1.A-3 OPERATION OF REFUELING PLATFORM

1.0 PURPOSE

This provides the instruction necessary to operate the Refueling Platform Main Hoist for core component and DUMMY fuel bundle movements within the Fuel Pool and Reactor Core. This procedure shall be used in conjunction with Fuel Handling Procedure FH-6C, "Core Component Movement - Core Transfers", or FH-35, "Control of Material Movement in the Fuel Pool" as appropriate.

2.0 PREREQUISITES

2.1 IF performing transfers in the Reactor, THEN all prerequisites included in Procedure FH-6C, "Core Component Movement - Core Transfers" have been completed as appropriate.

2.2 IF performing transfers in the Fuel Pool only, THEN all prerequisites included in Procedure FH-35, "Control of Material Movement in the Fuel Pool" have been completed as appropriate.

2.3 DUMMY fuel bundle movement shall be governed by FH-35 OR FH-6C.

2.4 Refuel Platform started up AND checked out in accordance with SO 18.1.C-3, "Electrical, Mechanical and Pneumatic Alignment/Checkout of Refueling Platform." The main hoist section of the Refueling Platform Preoperational Checkoff List should be performed over the Reactor Cavity as soon as possible after core is accessible. Performing the preoperational checks in the cavity will ensure the mast will lower to the core height without binding.

2.5 IF operating in Full Automatic OR Semi-Automatic modes, THEN both Primary AND Redundant Encoders are selected for each axis on the UTILITIES screen(Ref. 6.4).

2.6 IF performing movement to OR from a Spent Fuel Storage Cask, THEN Cask Loading Normal Up limit shall be selected, OTHERWISE Refueling Normal Up limit shall be selected.

2.7 Attachment 9 of this procedure is posted on the Refueling Platform Mast.

3.0 PRECAUTIONS

3.1 WHEN operating equipment, IF it does NOT perform as expected, THEN place the equipment in a safe condition AND inform Shift Management or Fuel Handling Director(FHD).

3.2 Procedures SO 18.7.G-3, "Refueling Platform Overrides and Bypasses" and SO 18.7.F-3, "Handwheel Operation of Refueling Platform Bridge, Trolleys and Hoists" provide alternate methods for platform operation when the Refueling Platform is NOT performing as expected.

3.3 The monorail and frame mounted auxiliary hoist shall be full-up on hoist override with tools removed when not in use. Alternately, the tool and hoist cable may be stored in a safe location. Jam blocks shall be installed on aux hoist cables at all times.

3.4 Blade guides may be removed from the reactor core provided the associated control rod blade will be diagonally supported by fuel or other blade guide(s).

3.5 To prevent impact or mast/fuel assembly damage:

3.5.1 Trolley and Bridge shall always be accelerated AND decelerated slowly, avoiding sudden starts and stops.

3.5.2 Travel paths shall be clear before moving core components.

3.5.3 IF fuel OR a blade guide is grappled on the Main Hoist(grapple engaged), THEN "GRAPPLE NORMAL UP" light shall be lit before moving into Transfer Canal.

3.5.4 IF Main Hoist grapple is empty(grapple open), THEN Main Hoist position shall indicate less than 164 inches before moving into Transfer Canal.

3.5.5 Main Hoist grapple shall be in Normal Up position with "GRAPPLE NORMAL UP" light lit when not in use.

3.5.6 IF a core component is partially inserted into a location, THEN Bridge and Trolley shall only be moved using the TRAVERSE SYSTEM joystick for minor adjustments.

3.5.7 IF possible, observe channel fastener as it enters the core, fuel rack or sipping canister. To ensure channel fastener does NOT catch, push or pull mast assembly as required as bundle approaches fully seated position.

3.5.8 The following precautions apply when loading a fuel cask:

3.5.8.1 Top edge of cask fuel compartment could be damaged if impacted by a fuel bundle or weight of bundle is transferred to compartment. Use great care when aligning fuel bundle with cask opening.

3.5.8.1 Cask drain line protrudes into cask above the elevation of the fuel basket. Use great care when maneuvering bundles near the drain line as impacting drain line could cause fuel damage and/or drain line damage.

3.5.9 Use extreme caution and a slow hoist speed when handling unchanneled fuel bundles. Unchanneled bundles have the potential to twist and damage the bundle. Finger springs on the lower tie plate and fuel rod spacers may catch during bundle removal OR insertion.

3.6 Mast camera may impact surrounding structures when manipulating core components in the Reactor Core periphery, Fuel Pool periphery, Fuel Preparation Machine or Spent Fuel Storage Cask. Exercise caution to avoid impact damage.

3.7 IF during hoist operation:

3.7.1 "HOIST JAM" light comes on, THEN immediately stop and lower until "HOIST JAM" light goes out, THEN inform Fuel Handling Director for instruction.

3.7.2 "HOIST LOADED" light goes out prematurely, OR the load starts to lean, THEN:

3.7.2.1 Immediately stop lowering hoist.

3.7.2.2 Verify grapple switch is in "ENGAGE" position.

3.7.2.3 Verify "GRAPPLE ENGAGED" light is lit.

3.7.2.4 Slowly raise hoist to regain the weight of the load.

3.7.2.5 Inform Fuel Handling Director.

3.7.3 "GRAPPLE ENGAGED" light goes out unexpectedly during operation, THEN immediately stop and inform Fuel Handling Director

3.7.4 "HOIST LOADED" light comes on unexpectedly while raising grapple, THEN:

3.7.4.1 Immediately stop raising hoist.

3.7.4.2 Slowly lower hoist until "HOIST LOADED" light goes out.

3.7.4.3 Inform Fuel Handling Director.

3.7.5 "ROD BLK INTERLK #1" light does NOT light when refuel platform is over the core with the Main Hoist fuel loaded, THEN stop refuel platform operation AND inform Fuel Handling Director.

3.8 Fuel bundles may contact Control Rod Blades (CRB) at two elevations, approximately 385" and 400" hoist encoder position.

3.9 Prior to component handling concurrent with use of other unique equipment in the Reactor Cavity or Spent Fuel Pool, a determination should be made regarding the level of monitoring necessary to prevent contact between the equipment and the refuel platform mast, mast camera or core components suspended from the grapple.

Examples of unique equipment include in-vessel inspection or repair equipment, particularly those with umbilical cables. Depending on the risk of interference, consideration shall be given to positioning an individual on the refuel platform assigned the responsibility to monitor the position of the equipment (and umbilical if applicable) and alert Fuel Handling crew to STOP if interference is imminent.

3.10 If possible the fuel grapple shall be directly observed to be closed prior to lifting a load. Also check that the load's bail handle is inside the grapple head.

3.11 The RPO must NOT watch the hoist position indicator exclusively when a handled component is about to enter a designated location or when the empty grapple is approaching a seated component. The operator should observe component or grapple movement to avoid damage.

3.12 Peripheral fuel assemblies have a potential to miss their fuel support and seat low. Use extreme caution to maintain proper alignment while inserting assembly into the core.

3.13 Fuel bundles should be seated using a constant slow hoist speed while gently shaking the mast. Extreme slow speed and the absence of vibration increases the potential for bundles to require reseating.

3.14 Extra caution should be used when handling very old bundles. Careful monitoring of hoist load should be performed during lifting to ensure failure of bundle tie rods is promptly identified. In addition, channel fasteners AND bail handles have been found bent on old bundles which can lead to difficulty seating or releasing the bundle.(Reference 6.5)

3.15 Gentle rotation of the mast in both directions should be used prior to grapple engagement to ensure the fuel grapple is centered on the bail handle. Rapid or rough rotation during this check can lead to bundle damage, particularly when moving dechanneled fuel bundles(Reference 6.5).

3.16 The Refueling Platform shall be operated at the REFUELING PLATFORM OPERATOR access level unless specified otherwise in this OR other controlling procedures.

3.17 Power is removed from the cabinet air conditioners when a FAULT LOCKOUT occurs OR the STOP push button is depressed. This may cause a "CONSOLE HIGH TEMPERATURE" alarm.

3.18 Bridge speed is limited when the Main Hoist grapple is closed(engaged) AND the Main Hoist NOT fuel loaded. In this condition the PLC logic assumes there is a single or double blade guide on the Main Hoist and limits speed to prevent excessive drag loading on the mast(Ref. 6.6).

3.19 Prior to leaving the refueling platform temporarily unattended, the platform shall be positioned as directed by the FHD and the "STOP" push button depressed. Procedure SO 18.2.A-3, "Shutdown Of Refueling Platform", shall be performed for longer periods of shutdown(e.g. lunch hour, overnight, etc.).

3.20 IF Refueling Platform power needs to be temporarily interrupted (e.g., electrical blocking for emergent repairs OR transfer to/from alternate power supply), THEN perform computer shutdown section of SO 18.2.A-3, "Shutdown of Refueling Platform" prior to interrupting power.

3.21 Deenergizing the refueling platform while over the Reactor Cavity(track switches actuated) will generate a Rod Withdrawal Block in the Main Control Room. Notify Unit Reactor Operator prior to deenergizing the refueling platform with the track switches actuated.

3.22 The touch screen on the Operator Interface Console is required to be functional in order to change configuration of certain parameters(e.g., selection of Normal Up limit, selection of encoders for each axis, modification of Secure Travel Zone to recognize Fuel Pool Gate as removed or installed) and to operate in Semi-Automatic or Full Automatic modes. If all parameters are configured as required, the touch screen is NOT required to be functional for safe refueling platform operation in manual mode. Although the screen annunciator messages will NOT be available, the corresponding conditions will be evident via other visual or functional indications.

3.23 IF power to the PLC is interrupted while operating without a functional touch screen, THEN the Fuel Pool Gate status will default to "installed" when power is restored, preventing entrance into the Transfer Canal. The PLC will also default to the Refueling Normal Up limit when power is restored.

3.24 IF the message "COMMUNICATION TO THE PLC HAS BEEN LOST" is displayed on the touch screen meaning no further screen updates are possible, THEN refueling platform operation may continue in manual mode.

3.25 The OPERATOR INTERFACE CONSOLE AND SRO Station screens may be used as an alternate to the Right Hand OR Left Hand Controllers for verification of "SLACK CABLE", "HOIST LOADED", "GRAPPLE NORMAL UP" and "GRAPPLE ENGAGED" light status.

3.26 The keyboard AND/OR mouse stored in the OPERATOR INTERFACE CONSOLE may be connected to the front of the OPERATOR INTERFACE CONSOLE and used as an alternative to the "touch" function of the touch screen.

3.27 The computer slave screen at the SRO Station is for convenience and NOT required to be operational for Refueling Platform operation.

3.28 The Mast Orientation Interlock logic is NOT required to be functional for safe Refueling Platform operation. This optional feature is only active in Full Automatic mode and is a backup to the Double Verification by the FHD and RPO OR FHD and Spotter, which is the primary means of component orientation verification. Procedure SO 18.7.G-3, "Refueling Platform Overrides and Bypasses" provides instructions necessary to bypass the Mast Orientation Interlock logic if it is NOT performing as expected.

3.29 Attachments 1 through 4 summarize Refuel Platform interlocks and annunciators, including initiating conditions and effects on the system. Some of the screen annunciators provide suggested actions based on the initiating conditions. IF any annunciators appear unexpectedly, including those with suggested actions, THEN stop platform operation AND inform FHD prior to taking any action.

3.30 Touch screen annunciators with a pink background will bring up a popup information screen when touched. Touching "ACKNOWLEDGE" will close the popup screen.

3.31 Attachments 6 through 8 provide information regarding the Secure Travel Zone, Grapple Release Zone and bridge, trolley and hoist speed zones.

3.32 A CCTAS is not required for movement of the DUMMY fuel bundle.

4.0 PERFORMANCE STEPS

NOTES

1. The performance steps section of this procedure is separated into the following subsections:

   - o 4.1, Logging ON Computer
   - o 4.2, Change Person Logged ON Computer
   - o 4.3, Selection of Encoders for Bridge, Trolley and Hoist
   - o 4.4, Selection of Normal Up Limit
   - o 4.5, Loading Fuel Move Sequence From Shuffleworks
   - o 4.6, Semi-Automatic Operation
   - o 4.7, Full Automatic Operation
   - o 4.8, Pickup Location - Fuel Pool Storage Rack
   - o 4.9, Pickup Location - Reactor Core
   - o 4.10, Pickup Location - Fuel Preparation Machine
   - o 4.11, Pickup Location - Bundle Sipping Canister
   - o 4.12, Pickup Location - Spent Fuel Storage Cask
   - o 4.13, Set Down Location - Fuel Pool Storage Rack
   - o 4.14, Set Down Location - Reactor Core
   - o 4.15, Set Down Location - Fuel Preparation Machine
   - o 4.16, Set Down Location - Bundle Sipping Canister
   - o 4.17, Set Down Location - Spent Fuel Storage Cask

2. Perform applicable subsections of Section 4.0 at the direction of the FHD.

3. Refueling Platform operating mode(i.e. Manual, Semi-Automatic or Full Automatic) is NOT prescribed in the pickup/set down subsections of this procedure. Operating mode is at the discretion of the fuel handling crew.

4.1 Logging ON Computer

4.1.1 Touch "LOG ON" AND enter name.

4.1.2 IF incorrect name was entered, THEN touch "CHANGE NAME" AND enter name.

4.1.3 Touch "ENTER PASSWORD" AND enter password.

NOTE

Answering "YES" to the question "IS THE REFUELING GATE INSTALLED" modifies the Secure Travel Zone boundary to NOT allow entrance into the Transfer Canal.

4.1.4 At screen prompt "IS THE REFUELING GATE INSTALLED?", answer "YES" if either gate is installed OR "NO" if both gates are removed.

4.1.5 Verify proper access level is displayed.

4.1.6 Touch "PRESS FOR OPERATION" to display "MAIN" screen.

4.2 Change Person Logged ON Computer

4.2.1 Touch "SHOW MENU".

4.2.2 Touch "LOG OFF"

4.2.3 Touch "YES/LOG OFF".

4.2.4 New operator perform Section 4.1 of this procedure.

4.3 Selection of Encoders for Bridge, Trolley and Hoist

NOTE

This section can only be performed by personnel with FUEL HANDLING DIRECTOR access level OR higher.

4.3.1 Touch "SHOW MENU".

4.3.2 Touch "UTILITIES".

NOTE

Steps 4.3.3 through 4.3.5 apply to the Bridge, Trolley and Hoist encoders.

```
*****************************************************************
*                          CAUTION                              *
*                                                               *
*     Operation in Semi-Automatic OR Full Automatic modes       *
*     requires both Primary AND Redundant Encoders to be        *
*     selected(i.e. "0") for each axis in order to prevent      *
*     collision of the mast OR handled component in the event   *
*     a single encoder fails(Ref. 6.4).                         *
*****************************************************************
```

4.3.3 Touch screen button displaying current encoder selection for the axis to be set.

4.3.4 On the number pad enter desired encoder selection(i.e. "0", "1" OR "2").

4.3.5 Verify desired encoder selection is displayed on button.

4.3.6 Touch "RETURN TO OPERATION".

4.3.7 Perform Section 4.2 "Change Person Logged ON Computer" of this procedure to ensure operation at REFUELING PLATFORM OPERATOR access level.

4.4 Selection of Normal Up Limit

> NOTE
>
> This section can only be performed by personnel with FUEL HANDLING DIRECTOR access level OR higher.

4.4.1 Touch "SHOW MENU".

4.4.2 Touch "UTILITIES".

4.4.3 Touch "Refueling/Cask Loading" button to select appropriate Normal Up limit for the planned evolution.

4.4.4 Verify desired Normal Up Limit is displayed.

4.4.5 Touch "RETURN TO OPERATION".

4.4.6 Perform Section 4.2 "Change Person Logged ON Computer" of this procedure to ensure operation at REFUELING PLATFORM OPERATOR access level.

4.5 Loading Fuel Move Sequence From Shuffleworks

> NOTE
>
> This section can only be performed by personnel with FUEL HANDLING DIRECTOR access level OR higher.

4.5.1 Touch "SHOW MENU".

4.5.2 Touch "UTILITIES".

4.5.3 Touch "GO TO DATABASE".

4.5.4 Verify floppy disk containing the fuel move sequence has the appropriate approvals required by RE-C-40, "Core Component Transfer Authorization Sheet Generation and Administration".

4.5.5 At the OPERATOR INTERFACE CONSOLE insert the floppy disk into the computer.

4.5.6 Touch "LOAD NEW SEQUENCE FILE".

4.5.7 Select type of move sequence, i.e., SHUFFLE, OFFLOAD OR RELOAD.

4.5.8 WHEN the prompt appears "Is The New Sequence Disk in Drive A:\", THEN touch "YES".

4.5.9 WHEN file has completed loading from disk, THEN remove floppy disk.

4.5.10 Touch "Open Sequence File".

NOTE
The Shuffleworks file designates orientation as follows: 0 - NE 1 - SE 2 - SW 3 - NW

4.5.11 Verify a sample of steps against the paper copy Core Component Transfer Authorization Sheet(CCTAS).

4.5.12 Touch "Return To Control".

4.5.13 Touch "RETURN TO OPERATION".

4.5.14 Perform Section 4.2 "Change Person Logged ON Computer" of this procedure to ensure operation at REFUELING PLATFORM OPERATOR access level.

4.6 Semi-Automatic Operation

NOTES

1. The Refuel Platform computer does NOT recognize Fuel Pool Storage Rack locations outside the Secure Travel Zone, the Fuel Preparation Machines, Bundle Sipping Canisters OR Spent Fuel Storage Cask locations as valid locations for automatic moves.

2. An automatic move can be terminated at any time by performing one of the following:
   - o touching "AUTO STOP" on the MAIN OR HOIST screen
   - o deflecting any of the master joysticks
   - o depressing "STOP" push button on START/STOP STATION
   - o depressing "TRAVEL OVERRIDE" on RIGHT HAND CONTROLLER

****
* CAUTION *
*
* Operation in Semi-Automatic mode requires both Primary *
* AND Redundant Encoders to be selected for each axis in *
* order to prevent collision of the mast OR handled *
* component in the event a single encoder fails(Ref. 6.4). *
****

4.6.1 IF desired to change mode of multiple axis automatic operation, THEN perform the following; OTHERWISE continue with step 4.6.2:

4.6.1.1 Touch "SHOW MENU".

4.6.1.2 Touch "XY/XY&Z MODE ACTIVE" as necessary to select the desired mode of multiple axis automatic operation.

4.6.1.3 Touch "PRESS FOR OPERATION".

4.6.2 IF operating in the XY mode, THEN perform the following, OTHERWISE continue with step 4.6.3 of this procedure:

4.6.2.1 IF in the Fuel Pool AND grapple is released, THEN verify hoist position indicates less than 164 inches.

4.6.2.2 IF in the Fuel Pool AND grapple is engaged, THEN verify hoist is at Normal Up position.

4.6.2.3 IF above the core AND grapple is released AND the requested location will be in the core, THEN verify hoist position indicates less than 530 inches.

4.6.2.4 IF above the core AND grapple is released AND the requested location will be in the Fuel Pool, THEN verify hoist position indicates less than 164 inches.

4.6.2.5 IF above the core AND grapple is engaged AND the requested location will be in the core, THEN verify hoist position indicates less than 355 inches.

4.6.2.6 IF above the core AND grapple is engaged AND the requested location will be in the Fuel Pool, THEN verify hoist is at Normal Up position.

4.6.3 IF operating in the XY&Z mode, THEN perform the following, OTHERWISE continue with step 4.6.4 of this procedure:

4.6.3.1 IF in the Fuel Pool AND grapple is released, THEN verify hoist position indicates less than 164 inches.

4.6.3.2 IF in the Fuel Pool AND grapple is engaged, THEN verify hoist is at Normal Up position.

4.6.3.3 IF above the core AND grapple is released, THEN verify hoist position indicates less than 530 inches.

4.6.3.4 IF above the core AND grapple is engaged, THEN verify hoist position indicates less than 355 inches.

4.6.4 Verify Bridge AND Trolley are within the Secure Travel Zone.

4.6.5 Verify Bridge AND Trolley are NOT in the Transfer Canal.

4.6.6 Touch "SELECT AUTO" on the Main OR Hoist screens.

4.6.7 IF during auto move selection it is desired to return to manual operation, THEN touch "SELECT MANUAL", OTHERWISE continue with this procedure subsection.

4.6.8 Touch "Manual Step Selection Active"/ "Auto Step Selection Active" as necessary to select "Manual Step Selection Active".

4.6.9 Touch "REQUEST" AND enter the desired location on the keypad screen.

4.6.10 IF requested location is correct, THEN touch "VERIFY"; OTHERWISE return to step 4.6.9.

4.6.11 Touch "AUTO RUN" to initiate Refueling Platform movement.

4.7 Full Automatic Operation

NOTES

1. The Refuel Platform computer does NOT recognize Fuel Pool Storage Rack locations outside the Secure Travel Zone, the Fuel Preparation Machines, Bundle Sipping Canisters OR Spent Fuel Storage Cask locations as valid locations for automatic moves.

2. An automatic move can be terminated at any time by performing one of the following:
   - touching "AUTO STOP" on the MAIN OR HOIST screen
   - deflecting any of the master joysticks
   - depressing "STOP" push button on START/STOP STATION
   - depressing "TRAVEL OVERRIDE" on RIGHT HAND CONTROLLER

****
* CAUTION *
*
* Operation in Full Automatic mode requires both Primary *
* AND Redundant encoders to be selected for each axis *
* in order to prevent collision of the mast OR handled *
* component in the event a single encoder fails(Ref. 6.4). *
****

4.7.1 IF desired to change mode of multiple axis automatic operation, THEN perform the following; OTHERWISE continue with step 4.7.2:

4.7.1.1 Touch "SHOW MENU".

4.7.1.2 Touch "XY/XY&Z MODE ACTIVE" as necessary to select the desired mode of multiple axis automatic operation.

4.7.1.3 Touch "PRESS FOR OPERATION".

4.7.2 IF operating in the XY mode, THEN perform the following, OTHERWISE continue with step 4.7.3 of this procedure:

4.7.2.1 IF in the Fuel Pool AND grapple is released, THEN verify hoist position indicates less than 164 inches.

4.7.2.2 IF in the Fuel Pool AND grapple is engaged, THEN verify hoist is at Normal Up position.

4.7.2.3 IF above the core AND grapple is released AND the requested location will be in the core, THEN verify hoist position indicates less than 530 inches.

4.7.2.4 IF above the core AND grapple is released AND the requested location will be in the Fuel Pool, THEN verify hoist position indicates less than 164 inches.

4.7.2.5 IF above the core AND grapple is engaged AND the requested location will be in the core, THEN verify hoist position indicates less than 355 inches.

4.7.2.6 IF above the core AND grapple is engaged AND the requested location will be in the Fuel Pool, THEN verify hoist is at Normal Up position.

4.7.3 IF operating in the XY&Z mode, THEN perform the following, OTHERWISE continue with step 4.7.4 of this procedure:

4.7.3.1 IF in the Fuel Pool AND grapple is released, THEN verify hoist position indicates less than 164 inches.

4.7.3.2 IF in the Fuel Pool AND grapple is engaged, THEN verify hoist is at Normal Up position.

4.7.3.3 IF above the core AND grapple is released, THEN verify hoist position indicates less than 530 inches.

4.7.3.4 IF above the core AND grapple is engaged, THEN verify hoist position indicates less than 355 inches.

4.7.4 Verify Bridge AND Trolley are within the Secure Travel Zone.

4.7.5 Verify Bridge AND Trolley are NOT in the Transfer Canal.

4.7.6 Touch "SELECT AUTO" on the Main OR Hoist screens.

4.7.7 IF during auto move selection it is desired to return to manual operation, THEN touch "SELECT MANUAL", OTHERWISE continue with this procedure subsection.

4.7.8 Touch "Manual Step Selection Active"/ "Auto Step Selection Active" as necessary to select "Auto Step Selection Active".

> NOTE
>
> The selected portion(PICKUP/SETDOWN) of the auto move to be performed is highlighted in green on the MOVE INFORMATION section of the screen. The requested location along with its bridge and trolley coordinates are displayed in a box on the bottom of the screen.

4.7.9 IF it is desired to select a particular step in the move sequence, THEN touch "SELECT NEW STEP NUMBER" AND enter desired step on the keypad screen.

4.7.10 IF it is desired to increment to the SETDOWN portion of a step OR the PICKUP portion of the next step in the sequence, THEN touch "INCREMENT STEP".

4.7.11 IF requested location is correct, THEN touch "VERIFY"; OTHERWISE return to step 4.7.9.

4.7.12 Touch "AUTO RUN" to initiate Refueling Platform movement.

4.8 Pickup Location - Fuel Pool Storage Rack

4.8.1 Position Refuel Platform Mast over desired core component in accordance with Core Component Transfer Authorization Sheet (CCTAS).

4.8.2 Lower hoist until grapple is 6 to 12 inches above bail.

4.8.3 Verify grapple is open.

4.8.4 Rotate grapple as necessary to achieve grapple to bail alignment.

4.8.5 Slowly lower hoist until "SLACK CABLE" light is lit.

NOTE

Steps 4.8.6 through 4.8.9 shall be double verified by the Fuel Handling Director (FHD) and Refuel Platform Operator (RPO) OR Fuel Handling Director and Spotter.

4.8.6 Verify proper core component location and orientation.

4.8.7 Verify the following, THEN inform FHD of grapple position.

4.8.7.1 Grapple is centered over bail handle

4.8.7.2 Hoist position indication agrees with Attachment 9 for item seated in Fuel Pool Storage Rack.

4.8.8 WHEN directed by FHD, THEN engage grapple, AND verify "GRAPPLE ENGAGED" light is lit.

4.8.9 WHEN directed by FHD, THEN slowly raise load AND verify "HOIST LOADED" light is lit (fuel only).

NOTE

WHEN accessing storage locations outside the Secure Travel Zone, use of the TRAVEL OVERRIDE push button is required to raise the hoist. Hoist slow speed zone near Normal Up will NOT be active. IF the hoist is fuel loaded, THEN raise motion will stop automatically WHEN the selected Normal Up setpoint is reached. IF the hoist is NOT fuel loaded(empty or blade guide), THEN raise motion will NOT stop automatically WHEN the selected Normal Up setpoint is reached and must be stopped by releasing the hoist joystick. IF the joystick is NOT released, THEN the hoist will raise until the first Overhoist Backup switch stops upward motion.

4.8.10 Continue raising until grapple is fully raised, THEN verify "GRAPPLE NORMAL UP" light is lit.

4.8.11 Perform appropriate "Set Down Location" subsection of this procedure as directed by FHD.

4.9 Pickup Location - Reactor Core

4.9.1 Position Refuel Platform Mast over desired core component in accordance with Core Component Transfer Authorization Sheet (CCTAS).

4.9.2 Lower hoist until grapple is 6 to 12 inches above bail.

NOTES

1. While the bridge is over the core, the grapple will only open when it is within 1 foot of the top of a bail. If the grapple is opened in the Fuel Pool it will remain open while over the core until the GRAPPLE switch is placed in the "ENGAGE" position.

2. If the GRAPPLE switch is placed in the "RELEASE" position while the bridge is over the core but the grapple is NOT within 1 foot of the top of a bail, the grapple will remain closed and the "GRAPPLE RELEASED ALARM" will sound. If the grapple is moved to within 1 ft of the top of a bail the grapple will NOT open until the switch is first placed in the "ENGAGE" position and then placed in the "RELEASE" position.

4.9.3 Verify grapple is open.

4.9.4 Rotate grapple as necessary to achieve grapple to bail alignment.

4.9.5 Slowly lower hoist until "SLACK CABLE" light is lit.

NOTE

Steps 4.9.6 through 4.9.10 (except 4.9.9) shall be double verified by the FHD and RPO OR FHD and Spotter.

4.9.6 Verify proper core component location and orientation.

4.9.7 Verify the following, THEN inform FHD of grapple position.

4.9.7.1 Grapple is centered over bail handle.

4.9.7.2 Hoist position indication agrees with Attachment 9 for item seated in core.

4.9.8 WHEN directed by FHD, THEN engage grapple, AND verify "GRAPPLE ENGAGED" light is lit.

4.9.9 IF load is a Fuel Bundle, THEN FHD shall inform Unit Reactor Operator of pending fuel removal from the core.

4.9.10 WHEN directed by FHD, THEN slowly raise load AND verify "HOIST LOADED" light is lit (fuel only).

4.9.11 Continue raising until core component is clear of core.

4.9.11.1 Verify hoist position indicates less than 355.0 inches.

4.9.11.2 Verify item is clear of top guide.

4.9.12 IF load is a Fuel Bundle, THEN FHD shall inform Unit Reactor Operator fuel bundle has cleared core.

4.9.13 IF load is to be transferred through Transfer Canal, THEN continue raising until grapple is fully raised AND verify "GRAPPLE NORMAL UP" light is lit.

4.9.14 Perform appropriate "Set Down Location" subsection of this procedure as directed by FHD.

4.10 Pickup Location - Fuel Preparation Machine

4.10.1 Verify Fuel Prep Machine carriage is fully lowered.

4.10.2 Position Refuel Platform Mast over fuel prep machine in accordance with Core Component Transfer Authorization Sheet (CCTAS).

4.10.3 Lower hoist until grapple is 6 to 12 inches above bail.

4.10.4 Verify grapple is open.

4.10.5 Rotate grapple as necessary to achieve grapple to bail alignment.

4.10.6 Slowly lower hoist until "SLACK CABLE" light is lit.

NOTE

Steps 4.10.7 through 4.10.10 shall be double verified by the FHD and RPO OR FHD and Spotter.

4.10.7 Verify proper core component location and orientation.

4.10.8 Verify the following, THEN inform FHD of grapple position.

4.10.8.1 Grapple is centered over bail handle

4.10.8.2 Hoist position indication agrees with Attachment 9 for item seated in fuel prep machine.

4.10.9 WHEN directed by FHD, THEN engage grapple, AND verify "GRAPPLE ENGAGED" light is lit.

4.10.10 WHEN directed by FHD, THEN slowly raise load AND verify "HOIST LOADED" light is lit (fuel only).

4.10.11 Continue raising until grapple is fully raised, THEN verify "GRAPPLE NORMAL UP" light is lit.

****
* CAUTION *
*
* Automatic modes shall NOT be used to perform moves while *
* mast is in a fuel preparation machine. *
****

4.10.12 Perform appropriate "Set Down Location" subsection of this procedure as directed by FHD.

4.11 Pickup Location - Bundle Sipping Canister

4.11.1 Verify Bundle Sipping Canister lid is open.

4.11.2 Position Refuel Platform Mast over desired Bundle Sipping Canister in accordance with Core Component Transfer Authorization Sheet (CCTAS).

4.11.3 Lower hoist until grapple is 6 to 12 inches above bail.

4.11.4 Verify grapple is open.

4.11.5 Rotate grapple as necessary to achieve grapple to bail alignment.

4.11.6 Slowly lower hoist until "SLACK CABLE" light is lit.

NOTES

1. Steps 4.11.7 through 4.11.10 shall be double verified by the FHD and RPO OR FHD and Spotter.

2. Expected hoist position is determined AND recorded on Attachment 9 by use of dummy bundle per Section 4.16.

4.11.7 Verify proper core component location and orientation.

4.11.8 Verify the following, THEN inform FHD of grapple position.

4.11.8.1 Grapple is centered over bail handle

4.11.8.2 Hoist position indication agrees with value posted on Attachment 9 for sipping canister in use.

4.11.9 WHEN directed by FHD, THEN engage grapple AND verify "GRAPPLE ENGAGED" light is lit.

```
*****************************************************************
*                          CAUTION                              *
*                                                               *
*     Use extreme care to avoid collision of fuel bundle        *
*     with open Sipping Canister lid.                           *
*****************************************************************
```

4.11.10 WHEN directed by FHD, THEN slowly raise load AND verify "HOIST LOADED" light is lit (fuel only).

4.11.11 Continue raising until grapple is fully raised, THEN verify "GRAPPLE NORMAL UP" light is lit.

4.11.12 Perform appropriate "Set Down Location" subsection of this procedure as directed by FHD.

4.12 Pickup Location - Spent Fuel Storage Cask

4.12.1 Position Refuel Platform Mast over desired core component in accordance with Core Component Transfer Authorization Sheet (CCTAS).

4.12.2 Lower hoist until grapple is 6 to 12 inches above bail.

4.12.3 Verify grapple is open.

4.12.4 Rotate grapple as necessary to achieve grapple to bail alignment.

4.12.5 Slowly lower hoist until "SLACK CABLE" light is lit.

NOTE

Steps 4.12.6 through 4.12.9 shall be double verified by the FHD and RPO OR FHD and Spotter.

4.12.6 Verify proper core component location and orientation.

4.12.7 Verify the following, THEN inform FHD of grapple position.

4.12.7.1 Grapple is centered over bail handle.

4.12.7.2 Hoist position indication agrees with Attachment 9 for item seated in Cask.

4.12.8 WHEN directed by FHD, THEN engage grapple, AND verify "GRAPPLE ENGAGED" light is lit.

4.12.9 WHEN directed by FHD, THEN slowly raise load AND verify "HOIST LOADED" light is lit.

4.12.10 Continue raising until grapple is fully raised, THEN verify "GRAPPLE NORMAL UP" light is lit.

4.12.11 Perform appropriate "Set Down Location" subsection of this procedure as directed by FHD.

4.13 Set Down Location - Fuel Pool Storage Rack

4.13.1 Position core component over desired location in accordance with Core Component Transfer Authorization Sheet (CCTAS).

4.13.2 Rotate core component as necessary to achieve proper orientation.

4.13.3 Perform Double Verification to ensure proper core component location and orientation.

NOTES

1. Tooling may be utilized as necessary to guide a bent channel fastener into the spent fuel rack.

2. WHEN accessing storage locations outside the Secure Travel Zone, THEN use of the TRAVEL OVERRIDE push button is required to lower OR raise the hoist. Hoist slow speed zones near rack entrance, seating AND Normal Up will NOT be active.

4.13.4 WHEN directed by FHD, THEN lower load until "SLACK CABLE" light is lit.

NOTE

Steps 4.13.5 through 4.13.7 shall be double verified by the FHD and RPO OR FHD and Spotter.

4.13.5 Verify the following, THEN inform FHD of grapple position.

4.13.5.1 Component elevation appears equivalent to other stored components in the rack.

4.13.5.2 Hoist position indication agrees with Attachment 9 for item seated in Fuel Pool Storage Rack.

4.13.6 WHEN directed by FHD, THEN release grapple, AND verify grapple is open.

4.13.7 Slowly raise hoist while verifying "HOIST LOADED" light remains OFF.

4.13.8 Record completion of component transfer on CCTAS.

4.14 Set Down Location - Reactor Core

4.14.1 Position core component over desired location in accordance with Core Component Transfer Authorization Sheet (CCTAS).

4.14.2 Lower load until hoist position indicates approximately 355 inches, THEN stop lowering.

4.14.3 Rotate core component as necessary to achieve proper orientation.

4.14.4 Perform Double Verification to ensure proper core component location and orientation.

4.14.5 IF load is a fuel bundle, THEN FHD shall inform Unit Reactor Operator of pending fuel insertion in core.

NOTE

Fuel bundle may contact CRBs at two elevations approximately 385 inches and 400 inches hoist encoder position.

4.14.6 WHEN directed by FHD, THEN lower load until "SLACK CABLE" light is lit.

NOTE

Steps 4.14.7 through 4.14.9 shall be double verified by the FHD and RPO OR FHD and Spotter.

4.14.7 Verify the following, THEN inform FHD of grapple position.

4.14.7.1 Component elevation appears equivalent to other components in the Reactor Core.

4.14.7.2 Hoist position indication agrees with Attachment 9 for item seated in Reactor Core.

4.14.8 WHEN directed by FHD, THEN release grapple, AND verify grapple is open.

4.14.9 Slowly raise hoist while verifying "HOIST LOADED" light remains OFF.

4.14.10 Record completion of component transfer on CCTAS.

4.14.11 IF load was a fuel bundle, THEN FHD shall inform Unit Reactor Operator of completion of fuel insertion in core.

4.15 Set Down Location - Fuel Preparation Machine

4.15.1 Verify Fuel Prep Machine carriage is fully lowered.

4.15.2 Position component over desired fuel prep machine in accordance with Core Component Transfer Authorization Sheet (CCTAS).

4.15.3 Rotate core component as necessary to achieve proper orientation.

4.15.4 Perform Double Verification to ensure proper core component location and orientation.

4.15.5 WHEN directed by FHD, THEN lower load until "SLACK CABLE" light is lit.

NOTE

Steps 4.15.6 through 4.15.8 shall be double verified by the FHD and RPO OR FHD and Spotter.

4.15.6 Verify Hoist position indication agrees with Attachment 9 for item seated in fuel prep machine, THEN inform FHD of grapple position.

4.15.7 WHEN directed by FHD, THEN release grapple, AND verify grapple is open.

4.15.8 Slowly raise hoist while verifying "HOIST LOADED" light remains OFF.

4.15.9 Record completion of component transfer on CCTAS.

4.16 Set Down Location - Bundle Sipping Canister

****
* CAUTION *
*
* Use extreme care to avoid collision of fuel bundle *
* with open Sipping Canister lid. *
****

4.16.1 Verify Bundle Sipping Canister lid is open.

NOTE

The following step determines the expected hoist position for use of sipping canisters. It shall be performed one time for each sipping canister to be used. Reactor Engineering can provide information on dummy bundle location.

4.16.2 Obtain and record hoist position of bundle seated in sipping canister.

4.16.2.1 Fuel Handling Director and Refuel Platform Operator or Spotter, verify DUMMY fuel bundle location.

4.16.2.2 Grapple and raise DUMMY bundle in accordance with Section 4.8.

4.16.2.3 Position DUMMY bundle over sipping canister and rotate bundle to achieve alignment.

4.16.2.4 WHEN directed by FHD, THEN slowly lower load until "SLACK CABLE" light is lit.

4.16.2.5 Using underwater camera, verify bundle is fully seated in sipping canister.

> NOTE
>
> The range(target hoist position) for a fuel bundle seated in a Bundle Sipping Canister(refer to Attachment 9) is calculated by subtracting 1.5 inches from, AND adding 0.5 inches to, the hoist position indication obtained below.

4.16.2.6 Record hoist position AND calculate the range for each Bundle Sipping Canister below:

SIPPING CANISTER ID/ LOCATION	HOIST POSITION INDICATION	RANGE
1. _____	_____	_____-_____
2. _____	_____	_____-_____

4.16.2.7 Perform appropriate steps in Sections 4.11 and 4.13 to store DUMMY bundle in Fuel Pool Storage Rack location in AS-FOUND position.

4.16.2.8 Record the ID/Location AND Range for each Sipping Canister on the copy of Attachment 9 posted on the Refueling Platform mast.

4.16.3 Position fuel bundle over desired bundle sipping canister in accordance with Core Component Transfer Authorization Sheet (CCTAS).

4.16.4 Rotate fuel bundle as necessary to achieve proper insertion alignment.

4.16.5 Perform Double Verification to ensure proper core component location and orientation.

4.16.6 WHEN directed by FHD, THEN lower load until "SLACK CABLE" light is lit.

NOTE

Steps 4.16.7 through 4.16.9 shall be double verified by the FHD and RPO OR FHD and Spotter.

4.16.7 Verify the following, THEN inform FHD of grapple position.

4.16.7.1 Fuel Bundle is fully seated in the Bundle Sipping Canister

4.16.7.2 Hoist position indication agrees with value posted on Attachment 9 for sipping canister in use.

4.16.8 WHEN directed by FHD, THEN release grapple, AND verify grapple is open.

4.16.9 Slowly raise hoist while verifying "HOIST LOADED" light remains OFF.

4.16.10 Record completion of component transfer on CCTAS.

4.17 Set Down Location - Spent Fuel Storage Cask

4.17.1 Position core component over desired location in accordance with Core Component Transfer Authorization Sheet(CCTAS).

4.17.2 Lower load until hoist indicates approximately 10 inches, THEN stop lowering.

4.17.3 Rotate core component as necessary to achieve proper orientation.

4.17.4 Perform double verification to ensure proper core component location AND orientation.

4.17.5 WHEN directed by FHD, THEN lower load until "SLACK CABLE" light is lit.

NOTE

Steps 4.17.6 through 4.17.8 shall be double verified by the FHD and RPO OR FHD and Spotter.

4.17.6 Verify the following, THEN inform FHD of grapple position.

4.17.6.1 Component elevation appears equivalent to other stored components in the cask.

4.17.6.2 Hoist position indication agrees with Attachment 9 for an item seated in cask.

4.17.7 WHEN directed by FHD, THEN release grapple AND verify grapple is open.

4.17.8 Slowly raise hoist while verifying "HOIST LOADED" light remains OFF.

4.17.9 Record completion of component transfer on CCTAS.

5.0 CONTROL STATIONS

5.1 30C950A, "U/3 Refueling Platform Left Hand Controller"

5.2 30C950B, "U/3 Refueling Platform Right Hand Controller"

5.3 HS-3-18-30S006, "U/3 Refueling Platform Start/Stop Station"

5.4 XC-90832 "U/3 Refueling Platform Operator Interface Console"

6.0 REFERENCES

6.1 M-1-M-765, U/3 GE Refueling Platform Instruction Manual Volume I

6.2 326-P-VC-38, 39, 45, PBAPS Refueling Platform Instruction Manual Units 2 and 3

6.3 PECO Fuel Handling (FH) Procedures

6.4 10CFR50.59 Safety Evaluation for MOD P00758 Refueling Platform Controls Upgrade(ECR 98-02407)

6.5 INPO OE 7535, Failed Fuel Bundle at Oyster Creek

6.6 SIL 594, "Refuel Platform Triangular Mast Drag Loading"

6.7 ECR PB 98-02621, MOD P00758 Refueling Platform Controls Upgrade

6.8 ECR PB 99-00352, Modify Refueling Interlocks to Eliminate Main Hoist Not Normal Up Interlock

6.9 AR A1238197e01, Mod P758 Procedure Strategy Notes for SO 18.1.A-2(3)

6.10 ECR PB 01-00600, Addition of Fuel-Loaded Input to Fuel Hoist Interlock Logic - Unit 3

7.0 TECHNICAL SPECIFICATION

7.1 Section 3.9.1

8.0 INTERFACING PROCEDURES

8.1 FH-6C, "Core Component Movement - Core Transfers"

8.2 FH-35, "Control of Material Movement in the Fuel Pool"

8.3 RE-C-40, "Core Component Transfer Authorization Sheet Generation and Administration"

8.4 SO 18.1.C-3, "Electrical, Mechanical and Pneumatic Alignment/Checkout of Refueling Platform"

8.5 SO 18.2.A-3, "Shutdown of Refueling Platform"

8.6 SO 18.7.G-3, "Refueling Platform Overrides and Bypasses"

8.7 SO 18.7.F-3, "Handwheel Operation of Refueling Platform Bridge, Trolleys and Hoists"

9.0 ATTACHMENTS

1. Interlock Status Display Annunciators
2. Main Screen Annunciators
3. Hoist Screen Annunciators
4. Auto Screen Annunciators
5. Hoist Condition By Elevation
6. Secure Travel Zone Description
7. Bridge And Trolley Zone Enforcement
8. Main Hoist Speed Zones
9. Hoist Encoder Position Ranges

ATTACHMENT 1

INTERLOCK STATUS DISPLAY ANNUNCIATORS

ANNUNCIATOR	INITIATING CONDITIONS	EFFECT ON OPERATIONS
ROD BLK INTERLK #1 (ROD BLOCK INTERLOCK #1)	BRIDGE NEAR OR OVER CORE AND ANY HOIST FUEL LOADED (See Note)	CONTROL ROD WITHDRAWAL BLOCK (RMCS), ROD WITHDRAW BLOCK ANNUNCIATOR - MCR, WHITE WITHDRAW PERMIT LIGHT OFF - MCR
BRIDGE REVERSE STOP #1	BRIDGE NEAR OR OVER CORE AND ANY HOIST FUEL LOADED AND NOT ALL RODS FULL IN	NO BRIDGE REVERSE MOTION
ROD BLK INTERLK #2 (ROD BLOCK INTERLOCK #2)	BRIDGE NEAR OR OVER CORE AND RX MODE SW NOT IN REFUEL OR ROD NOT SELECTED	CONTROL ROD WITHDRAWAL BLOCK (RMCS), ROD WITHDRAW BLOCK ANNUNCIATOR - MCR, WHITE WITHDRAW PERMIT LIGHT OFF - MCR
BRIDGE REVERSE STOP #2		NO BRIDGE REVERSE MOTION
FUEL HOIST INTERLK (FUEL HOIST INTERLOCK)	BRIDGE NEAR OR OVER CORE AND MAIN HOIST FUEL LOADED AND NOT ALL RODS FULL IN	MAIN HOIST INOPERATIVE
MONO HOIST INTERLK (MONO HOIST INTERLOCK)	BRIDGE NEAR OR OVER CORE AND NOT ALL RODS FULL IN AND APPLICABLE HOIST FUEL LOADED	MONO AUX HOIST INOPERATIVE
FRAME HOIST INTERLK (FRAME HOIST INTERLOCK)		FRAME AUX HOIST INOPERATIVE
FAULT LOCKOUT	MOTOR THERMAL OL - HOIST, BRIDGE, TROLLEY OPER CHECK TIMER - HOIST, BRIDGE, TROLLEY MOTOR DRIVE FAULT - HOIST, BRIDGE, TROLLEY ENCODER COMPARE ERROR - HOIST, BRIDGE, TROLLEY MAIN HOIST OVERSPEED PHASE LOSS MAIN CONTROL POWER OFF CABINET DOOR OPEN ON TROLLEY DECK VARIABLE SPEED SWITCHES NOT IN NEUTRAL DURING STARTUP	BRIDGE WILL NOT OPERATE NO BRIDGE, TROLLEY, HOIST MOTION GRAPPLES FAIL CLOSED
TEST IN PROG (TEST IN PROGRESS)	TEST BOX CONNECTED OR TESTING SCREEN ACTIVE	VARIABLE - DEPENDS ON TEST BUTTON POSITION
BACKUP HOIST LIMIT	MAIN HOIST TRAVEL TO APPROX. 1" ABOVE CASK LOADING NORMAL UP(OVERHOIST BACKUP SWITCH #1) OR APPROX. 11" ABOVE CASK LOADING NORMAL UP(OVERHOIST BACKUP SWITCH #2)	FURTHER MAIN HOIST RAISING PROHIBITED

NOTE: Depressing "STOP" push button with bridge near or over the core will also initiate a Rod Block Interlock #1.

ATTACHMENT 2

MAIN SCREEN ANNUNCIATORS

ANNUNCIATOR	INITIATING CONDITIONS	EFFECT ON OPERATIONS
TRAVEL OVERRIDE ACTIVATED (flashing)	TRAVEL OVERRIDE button activated	Bridge/Trolley/Hoist motion permitted at slow speed
SAFETY TRAVEL INTERLOCK	Bridge/Trolley outside Secure Travel Zone	NO Bridge/Trolley/Hoist motion
PLC OVERRIDE ACTIVE	PLC/COMPUTER OVERRIDE key switch in OVERRIDE position	All PLC functions/interlocks bypassed. Bridge/Trolley/Hoist motion at slow speed.
3" MOTION INTERLOCK HAS BEEN EXCEEDED	Bridge AND/OR Trolley moved more than 3" with the hoist lowered during component insertion	NO further motion in offending direction [TRAVEL OVERRIDE can be used to realign the Bridge/Trolley]
PHASE LOSS DETECTED	Loss of one OR more phases of incoming 480V power	NO Bridge/Trolley/Hoist motion (Will also result in a FAULT LOCKOUT)
CONSOLE TEMPERATURE ALARM	High temperature in the Trolley Control Cabinet, Trolley PLC Cabinet, OR Operator Interface Console	None - alarm only
FAULT OVERRIDE KEYSWITCH ACTIVATED (flashing)	FAULT OVERRIDE key switch turned to OVERRIDE position	Fault Lockout circuit bypassed. Fault conditions will NOT be annunciated via a FAULT LOCKOUT. However, FAULT CONDITION OVERRIDDEN annunciator will appear when a fault condition occurs.
FAULT CONDITION OVERRIDDEN	FAULT OVERRIDE key switch turned to OVERRIDE position concurrent with a valid Fault condition	Fault Lockout circuit bypassed. New fault conditions will NOT be annunciated.
SECURE TRAVEL ZONE BYPASSED (flashing)	Secure Travel Zone bypassed on UTILITIES screen	NO Secure Travel Zone enforcement
A PLC I/O FAULT HAS BEEN DETECTED	A PLC I/O module is NOT responding to commands from the CPU, OR the PLC configuration file detects a module has been removed	Variable - depends on the affected module
COMMUNICATION TO THE PLC HAS BEEN LOST	Loss of communication between the PC AND the PLC	NO further screen updates [Refueling Platform operation may continue in manual mode]
HOIST IS LOADED AND NOT AT THE CASK LOADING UP LIMIT	Bridge AND/OR trolley attempting to enter the Cask Zone when fuel loaded AND NOT at the Cask Loading Normal Up limit with Cask Loading Up Limit selected	NO Bridge/Trolley/Hoist motion

ATTACHMENT 2(cont.)

MAIN SCREEN ANNUNCIATORS

ANNUNCIATOR	INITIATING CONDITIONS	EFFECT ON OPERATIONS
ROD BLOCK INTERLOCK #1	BRIDGE NEAR OR OVER CORE AND ANY HOIST FUEL LOADED	CONTROL ROD WITHDRAWAL BLOCK (RMCS), ROD WITHDRAW BLOCK ANNUNCIATOR - MCR, WHITE WITHDRAW PERMIT LIGHT OFF - MCR
BRIDGE REVERSE STOP #1	BRIDGE NEAR OR OVER CORE AND ANY HOIST FUEL LOADED AND NOT ALL RODS FULL IN	NO BRIDGE REVERSE MOTION
ROD BLOCK INTERLOCK #2	BRIDGE NEAR OR OVER CORE AND RX MODE SW NOT IN REFUEL OR ROD NOT SELECTED	CONTROL ROD WITHDRAWAL BLOCK (RMCS), ROD WITHDRAW BLOCK ANNUNCIATOR - MCR, WHITE WITHDRAW PERMIT LIGHT OFF - MCR
BRIDGE REVERSE STOP #2	BRIDGE NEAR OR OVER CORE AND RX MODE SW NOT IN REFUEL OR ROD NOT SELECTED	NO BRIDGE REVERSE MOTION
FUEL HOIST INTERLOCK	BRIDGE NEAR OR OVER CORE AND MAIN HOIST FUEL LOADED AND NOT ALL RODS FULL IN	MAIN HOIST INOPERATIVE
MONO HOIST INTERLOCK	BRIDGE NEAR OR OVER CORE AND NOT ALL RODS FULL IN AND MONO HOIST FUEL LOADED	MONO AUX HOIST INOPERATIVE
FRAME HOIST INTERLOCK	BRIDGE NEAR OR OVER CORE AND NOT ALL RODS FULL IN AND FRAME HOIST FUEL LOADED	FRAME AUX HOIST INOPERATIVE
FAULT DETECTED	MOTOR THERMAL OL - HOIST, BRIDGE, TROLLEY OPER CHECK TIMER - HOIST, BRIDGE, TROLLEY MOTOR DRIVE FAULT - HOIST, BRIDGE, TROLLEY ENCODER COMPARE ERROR - HOIST, BRIDGE, TROLLEY MAIN HOIST OVERSPEED PHASE LOSS MAIN CONTROL POWER OFF CABINET DOOR OPEN ON TROLLEY DECK VARIABLE SPEED SWITCHES NOT IN NEUTRAL DURING STARTUP	BRIDGE WILL NOT OPERATE NO BRIDGE, TROLLEY, HOIST MOTION GRAPPLES FAIL CLOSED

ATTACHMENT 3

HOIST SCREEN ANNUNCIATORS

Annunciator	Initiating Conditions	Effect on Operations
TRAVEL OVERRIDE ACTIVATED (flashing)	TRAVEL OVERRIDE button activated	Bridge/Trolley/Hoist motion permitted at slow speed
SAFETY TRAVEL INTERLOCK	Bridge/Trolley outside Secure Travel Zone	NO Bridge/Trolley/Hoist motion
PLC OVERRIDE ACTIVE	PLC/COMPUTER OVERRIDE key switch in OVERRIDE position	All PLC functions/interlocks bypassed. Bridge/Trolley/Hoist motion at slow speed.
3" MOTION INTERLOCK HAS BEEN EXCEEDED	Bridge AND/OR Trolley moved more than 3" with the hoist lowered during component insertion	NO further motion in offending direction [TRAVEL OVERRIDE can be used to realign Bridge/Trolley]
PHASE LOSS DETECTED	Loss of one OR more phases of incoming 480V power	NO Bridge/Trolley/Hoist motion (Will also result in a FAULT LOCKOUT)
CONSOLE TEMPERATURE ALARM	High temperature in the Trolley Control Cabinet, Trolley PLC Cabinet, OR Operator Interface Console	None - alarm only
FAULT OVERRIDE KEYSWITCH ACTIVATED (flashing)	FAULT OVERRIDE key switch turned to OVERRIDE position	Fault Lockout circuit bypassed. Fault conditions will NOT be annunciated via a FAULT LOCKOUT. However, FAULT CONDITION OVERRIDDEN annunciator will appear when a fault condition occurs.
FAULT CONDITION OVERRIDDEN	FAULT OVERRIDE key switch turned to OVERRIDE position concurrent with a valid Fault condition	Fault Lockout circuit bypassed. New fault conditions will not be annunciated.
HOIST NOT IN PERMISSIVE ZONE	Hoist outside Secure Travel Zone	NO Hoist motion. NO Bridge/Trolley motion in offending direction.
SECURE TRAVEL ZONE BYPASSED (flashing)	Secure Travel Zone bypassed on UTILITIES screen	NO Secure Travel Zone enforcement
A PLC I/O FAULT HAS BEEN DETECTED	A PLC I/O module is NOT responding to commands from the CPU, OR the PLC configuration file detects a module has been removed	Variable - depends on the affected module
ROD BLOCK INTERLOCK #1	BRIDGE NEAR OR OVER CORE AND ANY HOIST FUEL LOADED	CONTROL ROD WITHDRAWAL BLOCK (RMCS), ROD WITHDRAW BLOCK ANNUNCIATOR - MCR, WHITE WITHDRAW PERMIT LIGHT OFF - MCR
BRIDGE REVERSE STOP #1	BRIDGE NEAR OR OVER CORE AND ANY HOIST FUEL LOADED AND NOT ALL RODS FULL IN	NO BRIDGE REVERSE MOTION
ROD BLOCK INTERLOCK #2	BRIDGE NEAR OR OVER CORE AND RX MODE SW NOT IN REFUEL OR ROD NOT SELECTED	CONTROL ROD WITHDRAWAL BLOCK (RMCS), ROD WITHDRAW BLOCK ANNUNCIATOR - MCR, WHITE WITHDRAW PERMIT LIGHT OFF - MCR
COMMUNICATION TO THE PLC HAS BEEN LOST	Loss of communication between the PC AND the PLC	NO further screen updates [Refueling Platform operation may continue in manual mode]

ATTACHMENT 3 (Cont.)

HOIST SCREEN ANNUNCIATORS

Annunciator	Initiating Conditions	Effect on Operations
HOIST IS LOADED AND NOT AT THE CASK LOADING UP LIMIT	Bridge AND/OR trolley attempting to enter the Cask Zone when fuel loaded AND NOT at the Cask Loading Normal Up limit with Cask Loading Up Limit selected	NO Bridge/Trolley/Hoist motion
THERE IS A CONFLICT BETWEEN THE PLC AND EXTERNAL FUEL HOIST LOADED CONDITIONS	Set point module SP-MHL indicates main hoist is fuel loaded and analog load input to PLC indicates NOT fuel loaded, OR vice-versa	None [Evaluate operability of refueling interlocks]
GRAPPLE RELEASE INTERLOCK	Grapple switch in release position AND 1) main hoist fuel loaded, OR 2) hoist NOT within 12" of fuel seated in the core	Main hoist grapple will NOT release; GRAPPLE RELEASED ALARM will sound on Right Hand Controller.
HOIST RAISE LOCKOUT	Main hoist fuel loaded AND grapple limit switches indicate grapple open	NO main hoist raise motion
MAST ORIENTATION CONFLICT	Mast NOT oriented correctly based on fuel move sequence file AND mast orientation during component pickup, with hoist below Mast Orientation Interlock active elevation	NO main hoist lower motion
MAST ORIENTATION INTERLOCK IS BYPASSED	MAST ORIENTATION INTERLOCK is bypassed on UTILITIES screen	Mast Orientation Interlock NOT functional
BRIDGE REVERSE STOP #2	BRIDGE NEAR OR OVER CORE AND RX MODE SW NOT IN REFUEL OR ROD NOT SELECTED	NO BRIDGE REVERSE MOTION
FUEL HOIST INTERLOCK	BRIDGE NEAR OR OVER CORE AND MAIN HOIST FUEL LOADED AND NOT ALL RODS FULL IN	MAIN HOIST INOPERATIVE
FAULT DETECTED	MOTOR THERMAL OL - HOIST, BRIDGE, TROLLEY OPER CHECK TIMER - HOIST, BRIDGE, TROLLEY MOTOR DRIVE FAULT - HOIST, BRIDGE, TROLLEY ENCODER COMPARE ERROR - HOIST, BRIDGE, TROLLEY MAIN HOIST OVERSPEED PHASE LOSS MAIN CONTROL POWER OFF CABINET DOOR OPEN ON TROLLEY DECK VARIABLE SPEED SWITCHES NOT IN NEUTRAL DURING STARTUP	BRIDGE WILL NOT OPERATE NO BRIDGE, TROLLEY, HOIST MOTION GRAPPLES FAIL CLOSED
OVERHOIST BACKUP LIMIT #1	MAIN HOIST TRAVEL TO APPROX. 1" ABOVE CASK LOADING NORMAL UP	FURTHER MAIN HOIST RAISING PROHIBITED
OVERHOIST BACKUP LIMIT #2	MAIN HOIST TRAVEL TO APPROX. 11" ABOVE CASK LOADING NORMAL UP	FURTHER MAIN HOIST RAISING PROHIBITED
MAIN HOIST MOTION ERROR	Hoist motion was commanded in one direction AND hoist moved more than 2" from its starting point in other direction	NO hoist motion until condition acknowledged

ATTACHMENT 4

AUTO SCREEN ANNUNCIATORS

Annunciator	Initiating Conditions	Effect on Operations
YOU HAVE REQUESTED AN INVALID LOCATION	A location was requested which does NOT exist in the location database	CANNOT auto move to requested location
SEMI-AUTOMATIC IS NOT PERMISSIVE OR AUTOMATIC IS NOT PERMISSIVE	Automatic move requested which requires movement through Transfer Canal AND: 1) hoist NOT at Normal Up with grapple closed, OR 2) hoist position NOT less than 164" with grapple open	Auto move will NOT be executed
REQUEST PROHIBITED GATE IS INSTALLED	Bridge in pool AND auto move requested to core AND Refueling gate indicated as installed during LOGON	Auto move will NOT be executed

ATTACHMENT 5

HOIST CONDITION BY ELEVATION

Hoist Condition:	HOIST ENCODER VALUE:
Refueling Normal Up Limit:	0.00
Cask Loading Normal Up Limit	-6.00
Full Down Limit in Core:	553.00
Full Down Limit in Pool:	190.00
Full Down Limit at Prep Machines:	170.00
Full Down Limit in Cask area (Refueling Normal Up selected):	360.00
Full Down Limit in Cask area (Cask Loading Normal Up selected):	190.00
Set down of First Mast Section:	175.00
Set down of Second Mast Section:	372.00
Core Clear Grapple Closed:	< 355.00
Core Clear Grapple Open:	< 530.00
Racks Clear Grapple Closed:	Normal Up
Racks Clear Grapple Open:	< 164.00
Canal Clear Grapple Closed	Normal Up
Canal Clear Grapple Open	< 164.00
Cask Clear Fuel Loaded (Note: Only effective if Cask Loading Normal Up limit is selected.)	< -6.00
Cask Clear Grapple Open	< 164.00
Fuel entry slow zone core	365.00 to 400.00
Fuel entry slow zone pool racks	12.00 to 26.00
Fuel entry slow zone cask area	14.00 to 28.00
Fuel seating slow limit core	> 536.00
Fuel seating slow limit pool racks	> 177.00
Fuel seating slow limit cask area (Note: Only effective if Cask Loading Normal Up limit is selected.)	> 177.00
Mast Orientation Interlock Active-Core	> 365.00
Mast Orientation Interlock Active-Pool	> 7.00
Grapple Release Zone in Core	> 536.00

Note: Encoder values are approximate.

ATTACHMENT 6

SECURE TRAVEL ZONE DESCRIPTION

The PLC receives inputs from the bridge, trolley and hoist encoders, TRAVEL OVERRIDE push button, and grapple open/closed indication and compares that information with the defined areas or zone.

SECURE TRAVEL ZONE

The Secure Travel Zone for the bridge and trolley consists of two zones, one slightly smaller than the other. The smaller zone is the high speed zone which allows the bridge, trolley and main hoist to operate at their designed full speeds. The larger of the zones is the slow speed zone and slows the bridge and trolley speeds to 5 FPM until the Secure Travel Zone limit is reached activating the SAFETY TRAVEL INTERLOCK which stops the refueling platform.

The TRAVEL OVERRIDE push button is to allow further travel beyond the Secure Travel Zone or to travel back into the Secure Travel Zone at maximum speed of 5 FPM.

High speed zones and slow speed zones exist in the core, Transfer Canal and Fuel Pool(see attachment 7). If, during log on, the question "IS THE REFUELING GATE INSTALLED?" is answered yes, the refueling platform will be limited to the Pool Zone. The Canal Zone will no longer be accessible from the pool.

Main Hoist permissive zone for entrance into the Transfer Canal is dependent on whether the grapple is open or closed. If the grapple is open, then the hoist position must be less than 164 inches. If the grapple is closed, then the hoist must be at Normal Up position.

Bridge and trolley speed are limited to 2 FPM whenever the hoist is not at a "clear" elevation, depending on grapple status - see Attachment 5.

A zone in front of the East fuel prep machine enables the refueling bridge and trolley to drive into the prep machine WITHOUT the use of the Travel Override button. The bridge and trolley are limited to 5 FPM but the hoist may operate at 40 FPM. Travel Override is required to access the West fuel prep machine, but once in the prep zone, Travel Override is not required and bridge, trolley and hoist motion are the same as for the East prep machine.

The cask zones include the Cask Buffer Zone and the Cask Zone. They are in effect only when the Cask Loading Normal Up limit has been selected. The Cask Buffer Zone is an "L" shaped area just outside the cask pit where the racks end. Bridge and trolley motion will stop in this zone if the hoist is fuel loaded and NOT at the Cask Loading Normal Up limit. The bridge and trolley are limited to 30 FPM but the hoist may operate at 40 FPM.

The Cask Zone is still within the Pool Zone limits, with the Secure Travel Zone being defined by the Pool Zone limits. The bridge and trolley are limited to 30 FPM but the hoist may operate at 40 FPM.

ATTACHMENT 6 (cont.)

HOIST AND GRAPPLE ZONES

Hoist speed is dependent on bridge and trolley position and grapple elevation. Hoist speed zones while in the Secure Travel Zone are shown on attachment 8. The hoist, while outside of the Secure Travel Zone is limited to a maximum of 10 FPM. The Grapple Full Down light will illuminate while outside of the Secure Travel Zone because the down limit is zone-dependent. The JOG LOWER speed is 2 FPM. Grapple release is prohibited if the bridge and trolley are over the core with the grapple engaged and hoist is NOT within 12 inches from the top of fuel seated in the core. This is known as the Grapple Release Zone (GRZ).

ATTACHMENT 7

BRIDGE AND TROLLEY ZONE ENFORCEMENT

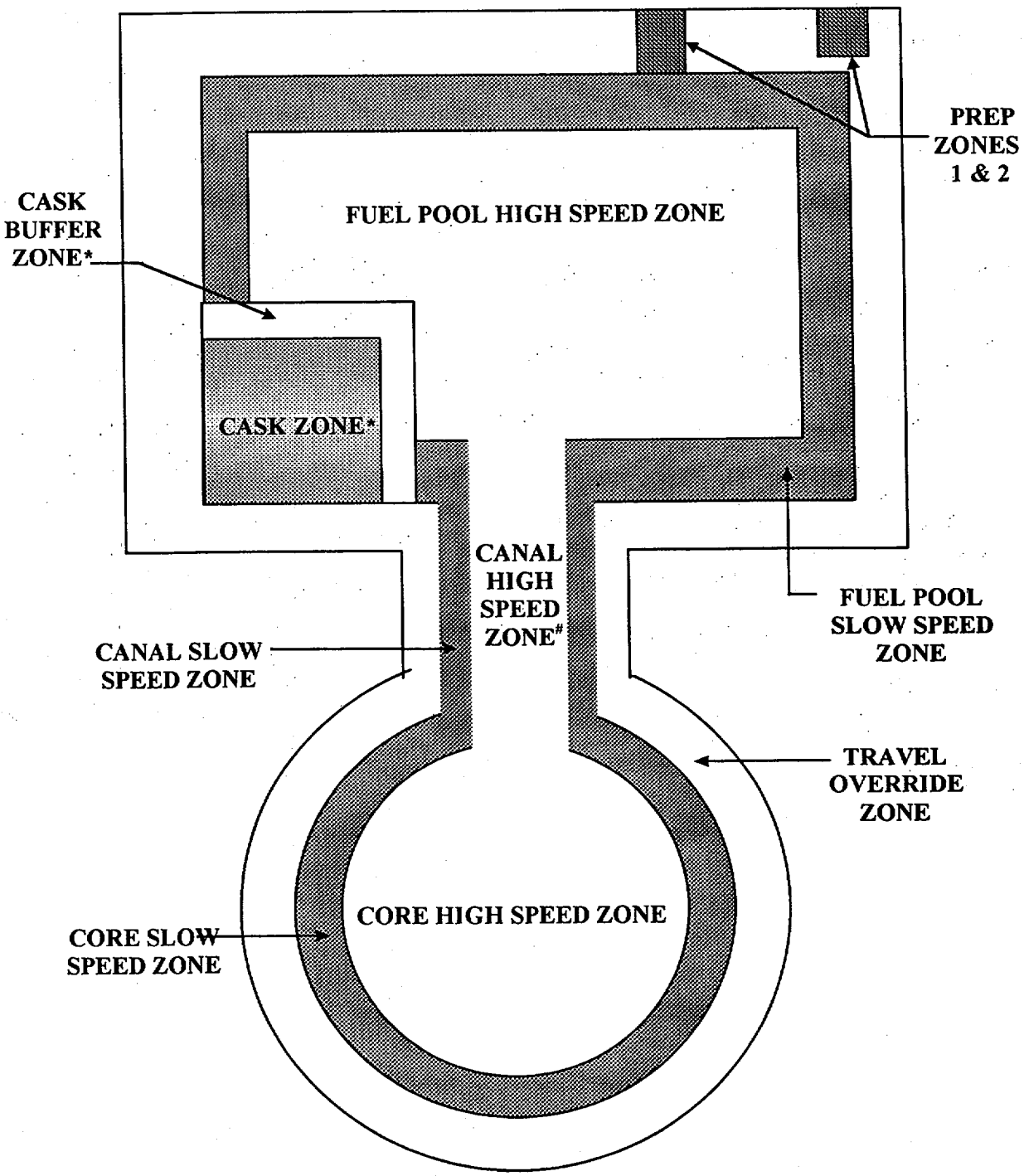

SECURE TRAVEL ZONE INCLUDES BOTH THE SLOW AND HIGH SPEED ZONES

*** IN EFFECT ONLY WHEN CASK LOADING NORMAL UP HAS BEEN SELECTED**

 # APPLIES TO BRIDGE ONLY; TROLLEY OPERATES AT SLOW SPEED IN THIS ZONE

ATTACHMENT 8

MAIN HOIST SPEED ZONES

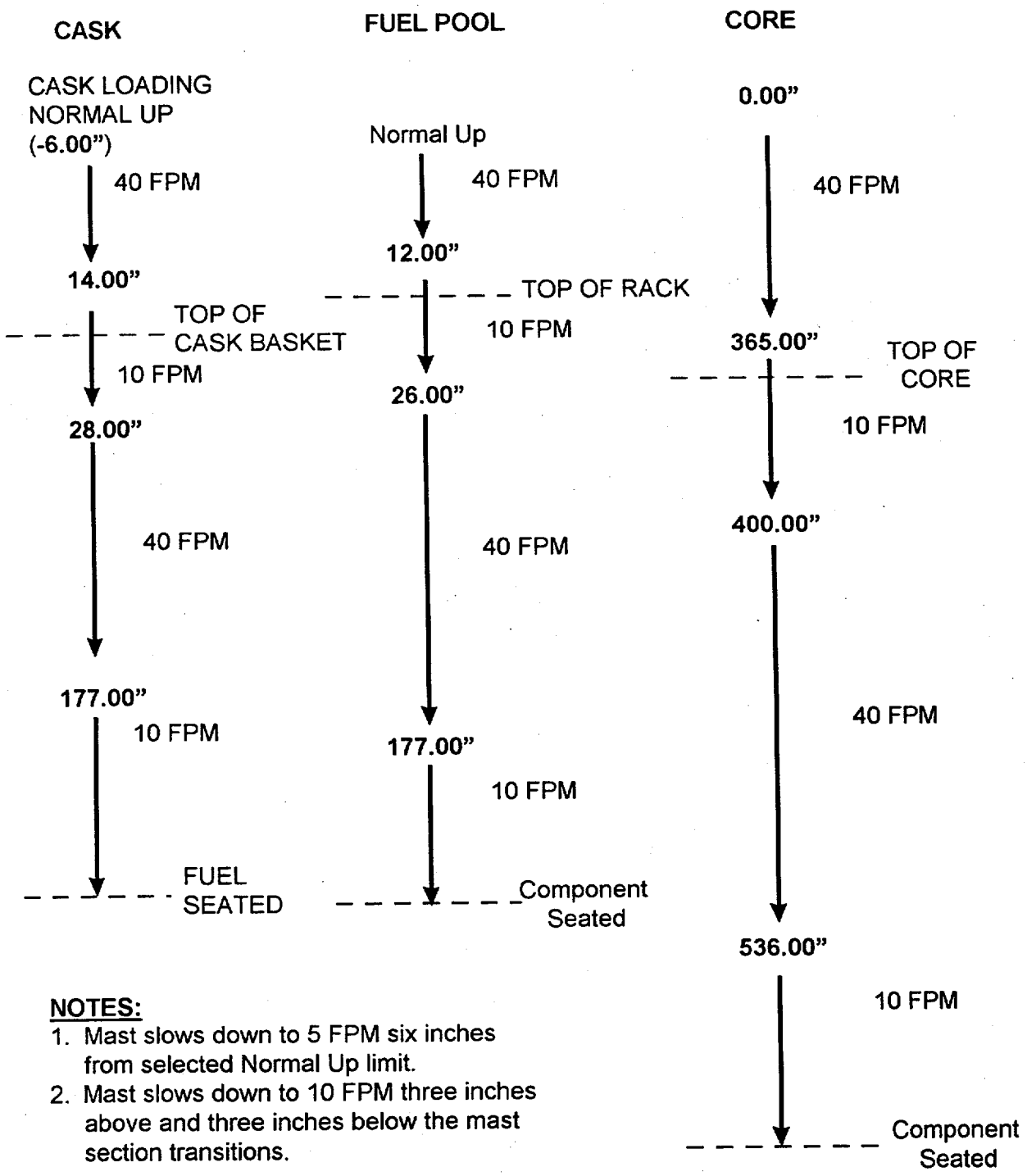

NOTES:

1. Mast slows down to 5 FPM six inches from selected Normal Up limit.
2. Mast slows down to 10 FPM three inches above and three inches below the mast section transitions.

All hoist speeds indicated are at maximum joystick deflection. Actual hoist speed for a given zone is variable up to the maximum, dependent on the amount of joystick deflection. All zones are approximate encoder readings

ATTACHMENT 9

HOIST ENCODER POSITION RANGES

	Range
Fuel or SBG* Entering Rack	17.0" - 19.0"
Fuel or SBG* Seated in Rack	186.2" - 188.2"
Fuel Entering Cask	17.5" - 19.5"
Fuel Seated in Cask	183.5" - 185.5"
Fuel or SBG* Entering Core	369.0" - 371.0"
Fuel or SBG* Seated in Core	549.2" - 551.2"
DBG** Entering Rack	11.5" - 13.5"
DBG** Seated in Rack	177.5" - 184.5"
DBG** Entering Core	367.0" - 369.0"
DBG** Seated in Core	543.7" - 548.7"
DBG** Stacked in Core	As determined acceptable by FHD
Bundle in FPM (Full Down)	166.5" - 168.5"
Bundle in FPM (Full Down with GE fuel inspection fixture installed)	159.2" - 161.2"
Bottom of Cask Pit	364.5" - 366.5"
Bundle Seated in Bundle Sipping Canister:_____ ID/Location	_____" - _____"
Bundle Seated in Bundle Sipping Canister:_____ ID/Location	_____" - _____"
Permissive for entrance into Transfer Canal with grapple open	< 164.00"
Permissive for entrance into Transfer Canal with grapple closed	Normal Up

* SBG = Single Blade Guide
** DBG = Double Blade Guide

PECO Energy Company
Peach Bottom Units 2 and 3

FH-35 CONTROL OF MATERIAL MOVEMENT IN THE FUEL POOL

1.0 PURPOSE

To provide a means to control movement of radioactive materials located in the fuel pool. This procedure also provides controls for the movement of loads over fuel within the spent fuel pool.

2.0 SCOPE

To control movement of radioactive material within the spent fuel pool, including new and irradiated fuel, fuel channels, nuclear instrumentation, control blades, etc. This procedure does NOT control core component movement during core off-load/reload OR shuffle, since these moves are covered by procedure FH-6C. This procedure does NOT control movement of the Spent Fuel Cask, since the cask move is covered by SF-220, "Spent Fuel Cask Loading and Transport Operations", OR SF-290, "Spent Fuel Cask Unloading Operations".

To control movement of loads over fuel located in the spent fuel pool.

3.0 REFERENCES

3.1 Tech Spec 3.3.6.2, 3.3.7.1, 3.3.8.1, 3.6.4.1, 3.6.4.2, 3.6.4.3, 3.7.4, 3.7.7, 3.8.2, 3.8.3, 3.8.5, 3.8.6, 3.8.8

3.2 TRMS 3.4

3.3 M-C-797-019 "Channeling/De-channeling of Irradiated Fuel Bundles".

3.4 FH-6C "Core Component Movement - Core Transfers"

3.5 RE-C-044 "Accountability and Control of SNM"

3.6 RE-C-40, "Core Component Transfer Authorization Sheet Generation and Administration"

3.7 ON-124, "Fuel Floor and Fuel Handling Problems"

3.8 A-C-33, "Nuclear Group Process for Verification of Quality"

3.9 A-C-130, "Fuel Floor Foreign Material Exclusion"

3.10 A-C-190, "Control of Heavy Loads"

3.11 GP-16, "Breaching and Establishing Secondary Containment"

3.12 Nuclear Operations Manual NOM-C-1.3, NOM-C-4.1, NOM-C-9.2.

3.13 SO 18.1.C-2(3), "Electrical, Mechanical and Pneumatic Alignment/Checkout of Refueling Platform"

3.14 SF-220, "Spent Fuel Cask Loading and Transport"

3.15 SF-290, "Spent Fuel Cask Unloading Operations"

3.16 PBAPS Independent Fuel Storage Safety Analysis Report(IFSSAR)

3.17 PBAPS 10 CFR 72.212 Report

3.18 BWROG Reactivity Controls Meeting, September 1995

3.19 PBAPS EIR's 2-91-62 and 2-91-68

3.20 EPRI NSAC 164L "Guidelines for BWR Reactivity Control During Refueling", April 1992 (A0787566)

3.21 CM-1, TSCR 93-16, Requirement to Maintain Secondary Containment If Fuel Cask Is Being Moved, A/R A0905549 E40 and E42 (T03766)

3.22 CM-2, NRC INSP RPT 85-12/12 Per NRC Violation 82-09-02 (T03193)

3.23 CM-3, Response to NRC Inspection report 77-19/21 (T01852)

3.24 CM-4, TSCR 93-16, Fuel Floor Crane Limits, A0905549 E56, (T03777)

3.25 CM-5, I0001540 E13, (T03251)

3.26 CM-6, PBAPS EIR 3-91-142, A0596950 (T02342)

3.27 AR A1158987, A1159331, Response to INPO IE8834 - "Problems associated with irradiated fuel inspection activities"

3.28 PEP issue (I0009814)

3.29 A-C-132, "Spent Fuel Pool Material Storage/Inventory And Housekeeping"

3.30 M-C-797-008, "Fuel Preparation Machine Maintenance"

3.31 ECR PB 98-02407, Mod P758 Refuel Platform Controls Upgrade

3.32 A-C-44, "Special Nuclear Material Accounting"

3.33 PEP Issue I0010407

3.34 ECR PB 00-01353, Calculation for Movement of Light Loads Over Irradiated Fuel

4.0 PREREQUISITES

INITIALS

> NOTE
>
> Prerequisites designated by an asterisk (*) next to the "INITIALS" line must be verified prior to initial component movement and prior to the start of each shift as part of the Fuel Handling Director Shift Turnover Record. Other prerequisites need only be verified prior to initial component movement or when a new working copy of this procedure is initiated. Shifts may be either 8 or 12 hours long.

4.1 Reactor Engineer (or a designated alternate) has created and distributed an approved Core Component Transfer Authorization Sheet (CCTAS) listing all intended movements and appropriate procedures to be used for all core components to be transferred. _____

4.2 Communications between the Refuel Floor and the control room shall be available. _____*

4.3 A radiation work permit (RWP) shall be available if required. _____

4.4 The refuel floor fire protection system consisting of 1-1 1/2" hoseline with combination nozzle and fire extinguisher available for use. _____

4.5 At least 22 feet of water over the top of the irradiated fuel seated in the spent fuel storage racks and fuel cask (water level greater than or equal to 232 ft 3 inches elevation)(required during movement of fuel assemblies in the spent fuel storage pool in accordance with Tech Spec 3.7.7). This prerequisite also applies to the handling of other loads over irradiated fuel seated in the spent fuel pool OR the fuel cask, unless an analysis has been performed justifying otherwise. _____*
FHD

4.6 Main Control Room Emergency Ventilation System AND Instrumentation are in compliance with the requirements of Tech Spec 3.3.7.1, AND 3.7.4 AND TRMS 3.4 (required during movement of irradiated fuel assemblies in the secondary containment). This prerequisite also applies to the handling of other loads over irradiated fuel seated in the spent fuel pool OR the fuel cask, unless an analysis has been performed justifying otherwise. _____*
SMgt

4.7 Standby gas treatment system is in compliance with the requirements of Tech Spec 3.6.4.3(required during movement of irradiated fuel assemblies in the secondary containment). This prerequisite also applies to the handling of other loads over irradiated fuel seated in the spent fuel pool OR the fuel cask, unless an analysis has been performed justifying otherwise.

_____ *
SMgt

4.8 Secondary containment, the secondary containment isolation valves, and applicable secondary containment isolation instrumentation are in compliance with the requirements of Tech Spec 3.3.6.2, 3.6.4.1 AND 3.6.4.2 (required during the movement of irradiated fuel OR a fuel cask in secondary containment). At least one Reactor Building and Refuel Floor ventilation exhaust fan must be in service to ensure rad monitor function. This prerequisite also applies to the handling of other loads over irradiated fuel seated in the spent fuel pool OR the fuel cask, unless an analysis has been performed justifying otherwise. **CM-1**

_____ *
SMgt

4.9 Electric power requirements AND electric power instrumentation requirements of Tech Spec 3.3.8.1, 3.8.2, 3.8.3, 3.8.5, 3.8.6, AND 3.8.8 are satisfied (required during movement of irradiated fuel assemblies in the secondary containment). This prerequisite also applies to the handling of other loads over irradiated fuel seated in the spent fuel pool OR the fuel cask, unless an analysis has been performed justifying otherwise.

_____ *
SMgt

4.10 If Aux hoists are to be used, jamming buttons shall be installed on the cables to limit upward movement of the cable so that the top of the grapple or tool in use remains at least 7 feet under water or as specified by procedure being used. (Mark N/A if Aux hoists are NOT in use OR if jamming buttons have been adjusted to allow blade guide placement/removal). **CM-2**

_____
FHD

4.11 An HP qualified person shall be present on the fuel floor during any work in fuel pool, reactor cavity, or equipment pit.

_____ *
FHD

4.12 Verify that the pool labeling markers have been correctly installed. Verify that the rows and columns match the permanent rack labels (mark this step N/A, if fuel pool markers have been removed from the fuel pool or are NOT being used).

_____ FHD

4.13 Verify with RSS Tech Staff/Rx Eng that the Fuel Pool Rack, CRB Rack, OR Fuel Cask locations to be used have been previously inspected for debris.

_____ NMD

4.14 Ensure personnel barriers and safety postings are in place near skimmer surge tank lid "peninsulas" (and any other areas deemed necessary by the FHD) to limit entry into these areas when the refueling platform is in use, as required.

_____ FHD

4.15 Fuel preparation machines functionally tested in accordance with M-C-797-008. (Mark N/A if fuel prep machine will NOT be used).

West FPM: _____ NMD

East FPM: _____ NMD

4.16 Fuel preparation machines travel stop set to handle irradiated fuel in accordance with M-C-797-008. IF FPM travel stop is NOT set to handle irradiated fuel, THEN FPM shall be tagged in accordance with M-C-797-008 to NOT be used for irradiated fuel. Check one status for EACH FPM.

_____: West FPM travel stop set for irradiated fuel

_____: West FPM tagged to NOT handle irradiated fuel

_____: East FPM travel stop set for irradiated fuel

_____: East FPM tagged to NOT handle irradiated fuel

_____ NMD

4.17 IF performing fuel movement to OR from Spent Fuel Cask, THEN verify Cask Loading Normal Up limit is selected on the Refueling Platform. OTHERWISE, N/A this step.

_____* FHD

4.18 IF NOT performing fuel movement to OR from Spent Fuel Cask, THEN verify Refueling Normal Up limit is selected on the Refueling Platform. OTHERWISE, N/A this step. _____* FHD

4.19 Verify with Reactor Engineering that this procedure will NOT move irradiated fuel into rack rows A-G, between rack columns 25-48, inclusive (Reference 3.33). _____ FHD

4.20 Obtain permission from Shift Management to begin this procedure. _____ / _____ SMgt / DATE

4.21 Obtain permission from the Unit Reactor Operator to begin this procedure. _____ / _____ RO / DATE

4.22 Ensure signed off original of the procedure is returned to Reactor Engineering AND signed off copies are given to the Control Room AND Fuel Handling Director. _____ NMD

5.0 DEFINITIONS

5.1 CCTAS - Core Component Transfer Authorization Sheet - A sequential listing and schedule of core component moves which may include both a paper copy and an electronic copy on disk for loading into the Refuel Platform computer. CCTAS's are prepared and controlled in accordance with procedure RE-C-40, "Core Component Transfer Authorization Sheet Generation and Administration". Reactor Engineering will determine if the use of a CCTAS is appropriate.

5.2 FHD - Fuel Handling Director - A Senior Licensed Operator, Senior Licensed Operator Limited to Fuel Handling, or a Designated Alternate (DA) approved by the Plant Manager. Approved Designated Alternates will be listed on the RE-C-40 paper copy CCTAS and can supervise component moves limited to within the fuel pool. The FHD shall report directly to Shift Management.

5.3 RPO - Refueling Platform Operator - A qualified person trained to operate the refueling platform and its hoist.

5.4 Double Verification - An additional level of verification of product quality by a second qualified individual, witnessing events prior to or during the activity, to verify that a specific condition exists.

5.5 Spotter - A second qualified RPO or FHD who may be assigned to the refueling platform to perform double verification functions in place of the RPO. The spotter will document his double verification in the "RPO" column of the paper copy CCTAS. An individual may be considered qualified for Spotting duties only (i.e. without being fully qualified to manipulate refueling platform controls) by NMD Supervision in accordance with applicable Training/Qualification procedures if he/she has demonstrated competency with core counting/fuel spotting.

6.0 ADMINISTRATIVE CONTROLS

6.1 The Reactor Engineer shall be responsible for:

6.1.1 Providing an approved CCTAS (if deemed necessary) in accordance with RE-C-40.

6.1.2 Ensuring that the appropriate SNM accountability records are accurate in accordance with RE-C-44.

6.2 The Fuel Handling Director (FHD) shall be responsible for:

6.2.1 Providing overall direction of personnel and equipment during material movement.

6.2.2 Shall supervise and be ultimately responsible for all component transfers in accordance with the RE-C-40 CCTAS. This includes Double Verification with the RPO or Spotter of correct mast position prior to grappling and prior to inserting a bundle into a designated location, and documentation of the move on the paper CCTAS.

6.2.3 Ensuring SO 18.1.C-2(3) Attachment 1, Refueling Platform Preoperational Checkoff List is performed prior to the first CCTAS move and as soon as practical at the beginning of all other platform movement shifts.

6.2.4 Completing the Fuel Handling Director Shift Turnover Record during the component movement activity. This checklist shall be filled out at the beginning of each shift by the oncoming FHD, and the off-going FHD if applicable.

6.2.5 Shall overlap during a turnover for at least one (1) move or until comfortable with the situation prior to the relieved individual leaving. Turnover shall not take place in the middle of a move involving transfer of a fuel bundle or blade guide, unless warranted by extraordinary circumstances (Ref. 3.28).

6.2.6 Shall conduct, as necessary, pre-evolution briefs with fuel handling personnel to discuss work activities, procedures, and methods for verification of CCTAS moves.

6.3 Health Physics qualified personnel shall be responsible for:

6.3.1 Providing refuel floor coverage in accordance with the applicable RWP during the performance of this procedure.

6.3.2 Surveying any equipment coming near the surface or out of the fuel pool, reactor cavity, or equipment pit. **CM-2**

6.3.3 Providing a radiation work permit (if required) and maintaining it for the work activity.

6.4 The Refueling Platform Operator shall be responsible for:

6.4.1 Operating the refueling platform properly and as directed by the Fuel Handling Director.

NOTE
Responsibilities listed in the next step may be performed by a Spotter.

6.4.2 Shall Double Verify with the FHD the correct mast position prior to grappling and prior to inserting a bundle into a designated location. The RPO or Spotter shall initial their paper copy of the CCTAS at move completion to indicate performance of Double Verification with the FHD.

6.4.3 Performing all fuel pool movements strictly in accordance with an approved CCTAS and approved station procedures.

6.4.4 Shall overlap during a turnover for at least one (1) move or until comfortable with the situation prior to the relieved individual leaving. Turnover shall not take place in the middle of a move involving transfer of a fuel bundle or blade guide, unless warranted by extraordinary circumstances (Ref.3.28).

6.5 NMD-Reactor Services personnel shall be responsible for:

6.5.1 Ensuring that the Spent Fuel Pool Material Log is updated in accordance with A-C-132, "Spent Fuel Pool Material/Inventory And Housekeeping".

7.0 FUEL ACCOUNTABILITY

7.1 All core components must be moved in accordance with the CCTAS.

7.2 Fuel pool maps, cask fuel bundle locations and fuel history sheets must be updated in accordance with RE-C-44.

8.0 PRECAUTIONS

8.1 Access to the refueling platform shall be strictly controlled to ensure proper dress and that no undue risk of dropping material into the fuel pool exists. All items brought onto the refueling platform must be properly logged. Fuel floor Foreign Material Exclusion shall be maintained per A-C-130. **CM-3**

8.2 The refueling platform shall be inspected in accordance with SO 18.1.C-2(3) Attachment 1, Refueling Platform Preoperational Checkoff List prior to performing the first CCTAS move. COL shall also be performed as early as practicable on subsequent platform movement shifts.

8.3 Fuel movement in the fuel pool shall be limited to maintain a sufficient distance (specified by HP personnel) of water between a fuel bundle and the fuel pool gates. Failure to do so may result in unnecessary exposure to personnel.

8.4 Loads greater than 1000 lbs. (excluding the rigging AND transport vehicle) shall NOT be moved over fuel assemblies in the spent fuel pool OR the fuel cask unless a PORC approved safety evaluation exists for the evolution. **CM-4**

8.5 IF a fuel bundle is to be placed in a fuel prep machine and left unattended, THEN the fuel prep machine shall be lowered to its full-down position and the air supply to the motor shall be secured.

8.6 Fuel Preparation Machines are NOT for storage of irradiated fuel assemblies. Therefore, prior to completing work activities for the day, OR whenever an extended delay in work is anticipated, fuel bundle(s) containing irradiated fuel rods shall be placed back into the fuel storage racks (Reference 3.27).

8.7 Shift Management and HP should be notified prior to moving any known leaking fuel bundles.

8.8 Swivel adapters shall be used singly to attach GE supplied and other approved servicing grapples to the refuel platform aux. hoists and auxiliary platform hoist. Do NOT use them to attach servicing grapples to any other crane or hoist without prior approval by Reactor Services Tech Staff. **CM-5**

9.0 LIMITATION TO CONTINUED FUEL POOL MOVEMENT

9.1 The dropping or damaging of a spent fuel assembly or individual fuel rod during the performance of this procedure shall be reason to terminate material movement operations and enter ON-124, "Fuel Floor and Fuel Handling Problems".

9.2 Failure or inoperability of any equipment or components of the refueling platform, including controls, indications, interlock circuitry and mechanical and electrical equipment, that increases the probability of causing an accident which would damage fuel, core components, the fuel pool, or equipment in the fuel pool shall be reason to discontinue material movement OR load handling until the affected equipment is returned to proper operation.

9.3 Table 1 provides requirements and limitations for handling light loads over irradiated fuel without secondary containment or other systems/equipment required to mitigate the fuel handling design basis accident (i.e., prerequisites 4.5 thru 4.9). These requirements and limitations are based on an engineering analysis documented in Reference 3.34.

9.4 If one or both Control Room Emergency Ventilation subsystems are inoperable, then take the required action(s) in accordance with Tech Spec 3.7.4. If the required action(s) being implemented include suspending handling of irradiated fuel in the secondary containment, then handling of other loads over irradiated fuel seated in the Spent Fuel Pool OR the fuel cask shall also be suspended, unless an analysis has been performed justifying otherwise.

9.5 If secondary containment, the SCIVs, OR one or both SBGT subsystems are inoperable, then take the required actions(s) in accordance with Tech Spec 3.6.4.1, 3.6.4.2 OR 3.6.4.3. If the required action(s) being implemented include suspending handling of irradiated fuel in secondary containment, then handling of other loads over irradiated fuel seated in the Spent Fuel Pool OR the fuel cask shall also be suspended, unless an analysis has been performed justifying otherwise. **CM-1**

9.6 IF the electrical power requirements of Tech Spec 3.3.8.1, 3.8.2, 3.8.3, 3.8.5, 3.8.6, OR 3.8.8 are NOT met, THEN take the required action(s) in accordance with the appropriate Tech Spec. If the required action(s) being implemented include suspending handling of irradiated fuel in secondary containment, then handling of other loads over irradiated fuel seated in the Spent Fuel Pool OR the fuel cask shall also be suspended, unless an analysis has been performed justifying otherwise.

9.7 A drop in fuel pool water level below Elevation 232 ft 3 inches shall be reason to discontinue the movement of fuel or other material OR loads, and enter ON-124.

9.8 Suspend core component movement in the fuel pool if any deviation from the CCTAS exists unless provisions are made which allow for an alternate course of action to be taken. If these provisions are not specified, contact Shift Management, the Reactor Engineering Manager (or designate) and request that a CCTAS revision be made in accordance with RE-C-40.

9.9 IF failure of a DOUBLE VERIFICATION (DV) is discovered, THEN Core Component Movement shall be terminated AND Shift Management, NMD Management and Reactor Engineering shall be notified. A PEP shall be initiated per LR-C-10 for failure of a DV. Challenges to the DV process (e.g. one verifier accepts a discrepant condition which is caught by the other verifier) should be monitored. PEP initiation should be considered for cases of multiple DV challenges. **CM-6**

9.10 IF difficulty is encountered during insertion OR removal of a component, THEN inspect location using camera.

10.0 PROCEDURE

NOTES

1. This procedure is divided into 3 sections: Section A is for fuel bundle relocation, Section B is for bundle channeling/dechanneling, and Section C is for removal/relocation of miscellaneous material. Only perform the appropriate section(s) of this procedure.

2. Changes to the CCTAS must be made in accordance with RE-C-40.

10.1 Section A - Fuel Bundle Relocation in Spent Fuel Pool (No Channeling/Dechanneling)

10.1.1 The Fuel Handling Director shall obtain two copies of the CCTAS plus an electronic disk copy if required and check that they are approved in accordance with RE-C-40.

10.1.2 Prior to moving the first fuel bundle and as soon as practical at the beginning of all other platform movement shifts, the Fuel Handling Director shall complete SO 18.1.C-2(3) Attachment 1, Refueling Platform Preoperational Checkoff List.

10.1.3 The Fuel Handling Director Shift Turnover Record shall be filled out at the beginning of each shift by the oncoming FHD, and the off-going FHD if applicable.

10.1.4 Notify Shift Management and the Unit Reactor Operator that fuel movement in the fuel pool is about to begin.

10.1.5 For fuel bundle relocation that does not require channeling and de-channeling, locate the specified fuel bundle in the fuel pool in accordance with the CCTAS.

10.1.6 The FHD and RPO (or Spotter) shall perform Double Verification of the location and move as described in sections 6.2 and 6.4. **CM-6**

10.1.7 Remove the specified fuel bundle from its original location in the fuel pool in accordance with the CCTAS and applicable station procedures.

10.1.8 Observe proper bundle orientation as specified. Note that orientation is determined by the position of the channel fastener.

10.1.9 Place the bundle in the new location specified on the CCTAS and applicable station procedures.

10.1.10 Sign off the appropriate step of the paper copy CCTAS to document Double Verification and step completion.

10.1.11 Repeat steps 10.1.5 through 10.1.10 for remaining fuel bundles listed on the CCTAS.

10.1.12 Notify Shift Management and the Unit Reactor Operator when fuel movement in the fuel pool is complete.

10.1.13 Return the completed CCTAS, both the paper and electronic copies if applicable, to the Reactor Engineer for updating accountability records.

10.2 SECTION B Channeling/De-Channeling

10.2.1 The Fuel Handling Director shall obtain two copies of the CCTAS plus an electronic disk if required and check that they are approved in accordance with RE-C-40. The Fuel Handling Director shall also have a copy of M-C-797-019 OR other approved fuel channeling procedure.

10.2.2 Complete the applicable prerequisites of M-C-797-019 OR other approved fuel channeling procedure.

10.2.3 Prior to moving the first fuel bundle and as soon as practical at the beginning of all other platform movement shifts, the Fuel Handling Director shall complete SO 18.1.C-2(3) Attachment 1, Refueling Platform Preoperational Checkoff List.

10.2.4 The Fuel Handling Director Shift Turnover Record shall be filled out at the beginning of each shift by the oncoming FHD, and the off-going FHD if applicable.

10.2.5 Notify Shift Management and the Unit Reactor Operator that channeling/de-channeling work in the fuel pool is about to begin.

10.2.6 In accordance with the instructions of the CCTAS and Procedure M-C-797-019 OR other approved fuel channeling procedure, begin the channeling and dechanneling operation.

10.2.6.1 The FHD and RPO (or Spotter) shall perform Double Verification of the move as described in sections 6.2 and 6.4. **CM-6**

10.2.6.2 Sign off the appropriate step of the paper CCTAS to document Double Verification and step completion.

10.2.7 Repeat step 10.2.6 for the remaining fuel bundles listed on the CCTAS.

10.2.8 Notify Shift Management and the Unit Reactor Operator of the completion of the channeling or dechanneling operations.

10.2.9 Return the completed CCTAS, both the paper and electronic copies if applicable to the Reactor Engineer for updating accountability records.

10.3 SECTION C - Removal AND/OR Relocation of Miscellaneous Nuclear Material

10.3.1 The Fuel Handling Director shall obtain two copies of the CCTAS plus an electronic disk copy, if required, and check that they are approved in accordance with RE-C-40.

10.3.2 The Fuel Handling Director shall have available the applicable procedures listed on the CCTAS OR work order.

10.3.3 Ensure that the Aux Hoist Jamming Buttons have been adjusted to limit the top of the Grapple or tool in use to at least 7 feet under water or as specified in other implementing procedures being used(N/A if Aux Hoists are NOT to be used). **CM-2**

10.3.4 Prior to performing the first CCTAS move and as soon as practical at the beginning of all other platform movement shifts, the Fuel Handling Director shall complete SO 18.1.C-2(3) Attachment 1, Refueling Platform Preoperational Checkoff List.

10.3.5 The Fuel Handling Director Shift Turnover Record shall be filled out at the beginning of each shift by the oncoming FHD, and the off-going FHD if applicable.

10.3.6 Notify Shift Management and the Unit Reactor Operator that material movement in the fuel pool is about to begin.

10.3.7 Perform the material relocation (using the RE-C-40 CCTAS if required). The FHD and RPO (or Spotter) shall perform Double Verification of the move as described in section 6.2 and 6.4. **CM-6**

10.3.7.1 Sign off the appropriate step of the paper CCTAS (if required) to document Double Verification and step completion.

10.3.8 Repeat step 10.3.7 for all items to be relocated.

10.3.9 Update the Spent Fuel Pool Material Log in accordance with A-C-132, "Spent Fuel Pool Material Storage/Inventory And Housekeeping".

10.3.10 Notify Shift Management and the Unit Reactor Operator of the completion of material movement in the fuel pool.

10.3.11 Return the completed CCTAS (both paper and electronic copies) if applicable to the Reactor Engineer for updating accountability records.

TABLE 1

ALLOWABLE LIGHT LOADS OVER IRRADIATED FUEL WITHOUT SECONDARY CONTAINMENT

This table provides a listing of light loads allowed to be handled over irradiated fuel without secondary containment or other systems/equipment required to mitigate the fuel handling design basis accident. These requirements and limitations are based on an engineering analysis documented in Reference 3.34.

Object	Limitations*
Any object 5 lbs. or less	None
Any object 10 lbs. or less	Object has drag and buoyancy properties less severe than either a 10 lb 1 inch dia. steel rod OR a 10 lb solid steel cube
TriNuć cartridge filter	10 lbs. or less (approx. 6" O.D. x 30" long)
Teletector survey instrument	10 lbs. or less
Black & White Camera/Light Assembly	10 lbs. or less (approx. 1.25" dia. with 3" x 4.5" light assembly)
Color Camera/Light Assembly	15 lbs. or less (approx. 5" x 5" x 10")
Guide Tube Vacuum Head	15 lbs. or less (approx. 10" dia.)
Color Camera/Light Assembly attached to lightweight handling poles (LWHP)	15 lbs. or less (approx. 5" x 5" x 10") LWHPs - any length, but no more than 10' above pole handler
Guide Tube Vacuum Head attached to LWHP	15 lbs. or less (approx. 10" dia.) LWHPs - any length, but no more than 10' above pole handler
LWHPs w/ no attachments	Maximum length = 20' OR Maximum length = 70' if bottom of assembly is within 4' of fuel #

* For all objects, spent fuel pool water level must be at least 231' 3"
\# Poles must be assembled in an area clear of fuel (e.g., over cask pit)

SQR	YES
PORC	NO
NQA	NO
50.59	YES
RESP MGR	YES

PECO Energy Company
NUCLEAR GENERATION GROUP

CORE COMPONENT TRANSFER AUTHORIZATION SHEET GENERATION AND ADMINISTRATION

1.0 PURPOSE

This procedure provides instructions for generation and administrative control of Core Component Transfer Authorization Sheets (CCTAS). (Ref. 3.1.4)

2.0 SCOPE

This procedure applies to CCTAS generated for refueling, in-vessel maintenance, and non-refueling movement of core components.

This procedure replaced FH-605 (LGS) and RE-43 (PBAPS).

3.0 SOURCES & REFERENCES

3.1 SOURCE DOCUMENTS

3.1.1 LGS Event Investigation Reports, 92-04-27, 92-04-35 "Double Blade Guide Misposition" (A/R A0400493 eval 02)

3.1.2 EPRI NSAC 164L, "Guidelines for BWR Reactivity Control During Refueling", April 1992

3.1.3 PEP Issue I0000293

3.1.4 LGS UFSAR Section 13.5.1.20, (A/R A0411306 Eval 77)

3.1.5 LGS PORC Commitment #91-021

3.1.6 NCRS LG 92-00329, LG 92-000330

3.1.7 Nuclear Regulatory Commission, IE Circular 80-21

3.1.8 PEP Issue I0003697

3.1.9 PEP Issue I0005166

3.1.10 LGS EWR A0004257, Attachment A

3.1.11 LGS Unit 2 Licensing Report For Spent Fuel Storage Capacity Expansion (HOLTEC Calculation HI-931012 Section 9.4)

3.1.12 CM-1, Source Document NRC URI 76-46/36; re: annotation of fuel transfer sheets for authenticity, (T01850)

3.1.13 CM-2, PBAPS Event Investigation Report 3-91-201, (T02075)

3.1.14 CM-3, PEP Issue I0000326, (T03250)

3.1.15 CM-4, Letter to NRC 8/19/96; re: Unit 1 Fuel Pool Capacity Limitation to 2500, (T03881)

3.1.16 CM-5, Letter to NRC 8/20/96; re: LGS Procedural Controls for Projected Spent Fuel Pool Heat Loads, (T03941)

3.1.17 PEP Issue I0009435

3.1.18 PEP Issue I0009589

3.1.19 ECR PB 98-02407, MOD P00758 Refueling Platform Controls Upgrade

3.1.20 PEP Issue I0010012

3.1.21 PEP Issue I0010407

3.1.22 PEP Issue I0011047

3.1.23 PEP Issue I0011130

3.2 **CROSS REFERENCES**

3.2.1 Procedure FM-C-4, "Generation of Core Component Transfer Authorization Sheets using SHUFFLEWORKS".

3.2.2 Procedure RE-C-44, "Accountability and Control of SNM".

3.2.3 ShuffleWorks User's Manual, Combustion Engineering Inc.

3.2.4 Procedure ST-R-002-930-2(3), "Refueling SDM Verification" (PBAPS Only).

3.2.5 Procedure FM-UG-423, "Determination of SRM/WRNM Count Rates"

3.2.6 Procedure SF-300, "TN-68 Cask Spent Fuel Assemblies Storage Selection and Document Requirements" (PBAPS only)

4.0 **DEFINITIONS**

4.1 CCTAS, CORE COMPONENT TRANSFER AUTHORIZATION SHEET: An approved sequence specifying the movement of core components which include a paper copy and at PBAPS may include an electronic copy on disk for loading into the Refueling Platform computer.

4.2 ICA, ITEM CONTROL AREA: Area designated in ShuffleWorks

allowed to contain SNM, i.e. fuel prep machine, fuel pool, reactor cores and casks.

4.3 CORE COMPONENT: A component which is or was an integral part of the reactor core. This includes fuel pins or assemblies (excluding "Dummy" bundles and individual fuel channels), control blades, local power range monitors, wide range neutron monitors, blade guides, fuel support pieces and startup sources. IRM/SRM/WRNM replacements above vessel are controlled by this procedure. Under vessel replacement of Nuclear Instruments (NIs) are controlled by reference 3.2.2.

4.4 SPECIAL NUCLEAR MATERIAL (SNM): Any material containing plutonium, U-233, or uranium enriched in U-233 or U-235. SNM is controlled by reference 3.2.2.

4.5 REFERENCE LOADING PATTERN: The specific core loading arrangement of the nuclear fuel for the next operating cycle. This arrangement of fuel is used for reload licensing analysis and is obtained from the associated Core Design Report.

4.6 SHUTDOWN MARGIN (SDM): Amount of reactivity by which the reactor is subcritical assuming all control rods are fully inserted except for the single control rod of highest reactivity worth which is assumed to be fully withdrawn and the reactor is in shutdown condition; cold (68 °F) and xenon free. **CM-3,** (Ref. 3.1.2).

4.7 SHUFFLEWORKS: Computer software which is used to generate fuel/core component sequences.

5.0 **RESPONSIBILITY AND AUTHORITY**

5.1 **REACTOR ENGINEERING BRANCH MANAGER: CM-3**

5.1.1 Assign a member(s) of staff to perform this procedure and generate CCTAS.

5.1.2 Authorize CCTAS generation and performance.

5.1.3 Designate individuals qualified to evaluate and authorize changes to CCTAS in accordance with section 8.4.

5.2 **STAFF MEMBER**(s) assigned to perform this procedure shall:

5.2.1 Maintain current data files for SHUFFLEWORKS.

5.2.2 Generate and review the CCTAS in accordance with section 8.0.

5.3 **CCTAS USERS** shall:

5.3.1 Ensure CCTAS is appropriate for the task to be performed.

5.3.2 Ensure the CCTAS step completion is documented appropriately.

5.3.3 Return completed CCTAS to Reactor Engineering Branch.

5.3.4 Initiate CCTAS changes as required in accordance with section 8.4.

6.0 **PREREQUISITES**

6.1 Appropriate SDM model AND Once Burnt Bundle constraint have been identified by Nuclear Fuel Management (NFM) (applicable to refueling activities only).

6.2 Reference loading pattern is available (applicable to refueling activities only).

6.3 K-infinities, SDM criteria and radial weighting factors have been loaded into ShuffleWorks. (Fuel moves in reactor vessel only) **CM-3**.

6.4 IF CCTAS involves steps in the core, THEN determine neutron monitoring instrumentation (SRM or WRNM) applicable to CCTAS being generated. See Exhibit RE-C-40-11.

6.5 Information required for other CCTAS applications such as fuel pool reconfiguration, new fuel receipt, CRB exchanges and cask loading.

6.6 ICA files with current and accurate information.

6.7 Any fuel pool locations that are inaccessible or deemed to be unusable have been designated as "UNUSABLE" in the ShuffleWorks computer program. See Exhibits RE-C-40-9 & 10.

6.8 Any core components that are deemed unusable/not moveable (e.g., damaged blade guide, leaking fuel assembly, etc.) have been designated as "UNUSABLE" in the shuffleWorks program. See Exhibits RE-C-40-9 & 10.

6.9 For a reload sequence, FSD has provided the predicted SRM/WRNM (as appropriate) count rates for the first four bundles surrounding each SRM or WRNM in accordance with Ref. 3.2.5.

6.10 For cask loading, an acceptable cask loading pattern has been developed in accordance with SF-300. (PBAPS only)

7.0 PRECAUTIONS AND LIMITATIONS

7.1 When moving fuel in the reactor, sequences must meet the SRM or WRNM connectivity constraint as described in Exhibit RE-C-40-13.

7.2 Do not generate a CCTAS step which places fuel into a cell which has its associated control rod withdrawn.

7.3 Do not generate a CCTAS step which withdraws a fuel assembly or blade guide unless the control rod in the cell is supported diagonally by blade guides or fuel.

7.4 Do not place irradiated fuel with less than 5 year decay time within 3 feet of fuel pool gates (actual or storage locations). Refer to Exhibit RE-C-40-15 for impacted locations. (Ref. 3.1.10)(LGS ONLY)

7.5 Fuel assemblies discharged prior to 1R04 located in the Unit 1 spent fuel pool must be inspected or evaluated for debris prior to use in core. (Ref. 3.1.5) (LGS ONLY)

7.6 The spent fuel pool capacity is limited to 2500 fuel assemblies, and a nominal 6.625 inches center-to-center spacing between fuel assemblies shall apply, until the completion of the high density re-racking of the spent fuel pool. (LGS Unit 1 ONLY) **CM-4**

7.7 Single blade guides must be oriented such that their channel spacers are adjacent to the control rod. Place a note stating such requirement prior to CCTAS step which uses a single blade guide in the reactor core.

7.8 During complete offload/reload or core shuffle with SRM operable, bundles in the cells on the A/D, A/B, B/C, and C/D quadrant boundaries should be considered to be monitored by the D, B, C and C SRM respectively. Connectivity to these SRMs should be verified. See Exhibit RE-C-40-11.

7.9 CCTAS columns which are not applicable to the specific application should have N/A placed in the column which does not apply.

7.10 SHUFFLEWORKS shall be used to generate CCTAS when it is available and recognizes all the components to be moved. **CM-2**

NOTE

All open cells of a given fuel rack should be inspected when any of the cells of that rack are planned to be used (Ref. 3.1.22).

7.11 Prior to CCTAS use, NMD is to verify empty cells that will be used do not contain foreign material. Foreign material is not permitted in the component location. **CM-2**

7.12 CCTAS changes shall be made in accordance with Section 8.4 of this procedure. (Ref. 3.1.2)

7.13 For reload sequence, load four bundles around each SRM/WRNM prior to any other steps. (Ref. 3.1.2) Place a note on the CCTAS stating the predicted count rate for the first four bundles surrounding each SRM or WRNM.

7.14 IF peripheral core locations listed in Exhibit RE-C-40-10 are being used in the sequence,
THEN verify a note is added prior to the step which states: "Caution: Mast camera may interfere with core shroud" (PBAPS Only).

NOTE (LGS ONLY)

The objective of performing RT-1-053-310-* is to confirm that adequate heat removal capacity is present in the target fuel pool. Performance of a new RT is not required if the results of a previous performance of the RT bounds the anticipated fuel pool configuration.

7.15 Before distributing a CCTAS which moves spent fuel into a Fuel Pool, RT-1-053-310-* must be or have been performed to ensure that adequate heat removal capacity is available in the Fuel Pool (LGS ONLY). **CM-5**

7.16 Movement of bundles into Fuel Pool rows "A" or "B" is difficult, because the spotter can NOT view the specified rows from the bridge. IF practical, THEN avoid rows "A" and "B" during outage work (LGS Unit 1 ONLY).

7.17 During a refueling outage, the CCTAS should not discharge fuel to locations within two feet of the spent fuel pool walls as this causes the refuel platform to move at slow speeds and causes unnecessary delays.

7.18 Ensure that fuel is stored next to the fuel pool coupons. For Unit 1, the coupons are located next to the cells noted in Exhibit RE-C-40-9. For Unit 2, the coupon tree may be moved such that it is surrounded by freshly discharged fuel assemblies. A refuel outage discharge plan should leave a space available for this requirement. If a bundle surrounding the Unit 2 coupon tree is moved, another freshly discharged bundle shall be moved to replace it. (LGS ONLY)

7.19 In order to avoid obstruction of the RHR and FPC discharge piping flow path to support natural circulation operation, Do Not load rack cells directly under and within two cells of this piping in the LGS 2 spent fuel pool. (LGS ONLY)

7.20 WHEN preparing CCTASs for new CRB receipt or CRB exchange where the combined CRB/FSP grapple may be used, THEN verify that locations for the new CRBs as well as locations planned for the discharge or temporarily stored CRBs have CRB spacers installed prior to using the locations either by documentation or direct observation. (LGS Only)

7.21 Sipping canisters may only be used in CRB rack cells that do not contain CRB spacers. (LGS only)

7.22 Fresh discharged fuel shall not be placed in the eastern most rows to prevent high exposure to personnel. (Ref. 3.1.11)(LGS Unit 2 ONLY)

7.23 When generating a CCTAS to allow for the removal/reinstallation of a CRB/fuel support piece, it is desirable that at least one of the bundles face adjacent to the north-west quadrant (at LGS) or south-west quadrant (at PBAPS) of the fuel support piece is off-loaded, provided that SRM or WRNM connectivity constraint is met as described in exhibit RE-C-40-13. This is in order to allow camera access for verification of plunger engagement.

7.24 When preparing a CCTAS that includes re-channeling of fuel bundle(s), include a note prior to each step (as appropriate) which provides the expected channel serial number and requires the fuel handlers to check that the correct channel is being used.(Ref. 3.1.17)

7.25 For items stored in locations designated in Exhibits RE-C-40-9 & 10, the location may be made usable and the item may be moved provided:

7.25.1 If the item is listed under Bad Fuel, the move is noted in the CCTAS to facilitate resolution of ARM alarms, AND

7.25.2 The item is not used in the core without, after being apprised of the item's status in Shuffleworks, specific FSD and Reactor Engineering Branch Manger approval is obtained, AND

7.25.3 Other constraints on the location (such as bundles next to Coupons) are met or the move is specifically approved by the System Manager or Reactor Engineering Branch Manager, AND

7.25.4 The new storage location is made unusable (unless the location is in-core) and a PPIS issued against the appropriate exhibit following item movement.

7.26 If it is determined that a bundle should not be used in-core (due to debris, failure, future inspections, etc.), then SHUFFLEWORKS shall be updated such that the bundle's storage location is made unusable and a note added to the bundle which describes the issue. If the bundle cannot be used in-core permanently, a PPIS to update Exhibits RE-C-40-9/10 should be created. (Ref. 3.1.18)

7.27 Spent Fuel Assemblies that are being transferred to a cask may be loaded into the cask in any orientation unless a specific orientation is desired, such as cask hold-down ring interference with the channel fasteners.

7.28 <u>IF</u> very old fuel is being moved, <u>THEN</u> ensure the CCTAS includes a note identifying this and that the following precautions should be taken: (Ref. 3.1.20)

1. Carefully monitor hoist load during lifting to promptly identify bundle tie rod failure.

2. Channel fasteners and bail handles have been found bent on old bundles which can make seating or releasing difficult.

3. Older style channel fasteners protrude further making it easier for fastener to catch when seating.

7.29 FOR CCTAS preparation in support of unit outage (Reference 3.1.21):

7.29.1 Ensure no current outage discharge fuel is placed in rack rows 25-48 between rack columns A-H, inclusive (at LGS Unit 1), in rack rows 32-54 between rack columns TT-AB, inclusive (at LGS Unit 2) <u>OR</u> in rack rows A-G between rack columns 25-48, inclusive (at PBAPS). (Ref. 3.1.21).

7.29.2 Uninspected cells should be made unusable once pre-outage inspections are complete (Ref. 3.1.22).

7.30 For non-outage CCTAS preparation, add requirements to perform the following CCTAS steps, as applicable:

7.30.1 Following placement of spent fuel within 8 rows of spent fuel pool/reactor cavity gates or fuel pool/cask pit gates (LGS Only), contact HP to perform dose measurement at fuel pool gates at reactor cavity or fuel pool side.

7.30.2 Ensure general area dose rate reading at fuel pool gates at reactor cavity/ cask pit (LGS Only) or fuel pool side is acceptable per HP.

7.30.3 IF dose rate is unacceptable, return fuel bundle to original location or other location as designated by Reactor Engineering.

7.31 Ensure all four fuel assemblies off-loaded around each LPRM that will be replaced during the Maintenance window. IF this is not possible due to other constraints, THEN plan a mini-shuffle between the CRB/CRD AND LPRM maintenance windows.

7.32 Do not insert single blade guides to take the place of double blade guides in cells with the control rod withdrawn. The single blade guide may damage the control rod during insertion or "kick out" to adjacent cells.

7.33 When moving core components between Spent Fuel Pools, the CCTAS cover sheet should contain a note reminding the FHD to contact HP to have the Reactor Buildings' 313' elevation properly posted for core component movement (LGS Only).

7.34 When moving LPRMS, ensure LPRM hanger number/rigging tag number is recorded on CCTAS via note associated with respective CCTAS movement step.

8.0 PROCEDURE SECTIONS

8.1 CCTAS GENERATION WITH SHUFFLEWORKS

8.1.1 Complete Exhibit RE-C-40-1, "CCTAS Information/Verification Sheet" with information that is applicable for the particular evolution.

8.1.2 Execute the SHUFFLEWORKS computer program in accordance with Exhibit RE-C-40-8.

8.1.3 IF the CCTAS are being generated automatically, THEN perform the following steps, Otherwise the following steps are N/A.

1. Ensure the following constraints are turned on in SHUFFLEWORKS:

   a. Shutdown Margin model specified by NFM in step 6.1.

   b. SRM or WRNM Connection Path (consistent with neutron instrumentation determined in step 6.4)

   c. SRM or WRNM Count Rate (consistent with neutron instrumentation determined in step 6.4)

   d. Fuel Movement Device Mast Orientation

   e. Control Rod Blade Support

   f. Fuel Movement Device Unusable locations

   g. Once Burnt Bundle constraint specified by NFN in step 6.1.

2. Enter the SHUFFLE menu, select automatic shuffle planning.

   a. Supply information as requested by the SHUFFLEWORKS program (maintenance locations, discharge and temporary storage locations, bundles to be sipped/inspected).

   b. Generate and save the sequence.

   c. **PBAPS ONLY:** <u>IF</u> sequence is required to be loaded into Refueling Platform Computer "Fuel Machine Sequence" (.fms) format, <u>THEN</u> perform the following:

      - Select Reports/Create fuel machine sequence

      - Select appropriate sequence source and planning sequence

      - Save the sequence to file (converts from .seq to .fms output)

      - Select "WRITE SEQUENCE TO A DISK FILE"

      - Enter "SHUFFLE" for output file name

      - Verify "SHUFFLE.FMS" file was created

- Copy this file to a disk and label disk with CCTAS title

- CCTAS preparer shall initial and date the disk label.

3. Ensure SDM log values are above the cycle specific SDM specified by NFM and all applicable constraints are met. **CM-3**.

   a. Confirm SDM limit is correct in appropriate SDM Model.

   b. Verify the sequence with SHUFFLEWORKS.

   c. Perform ST-R-002-930-2(3) for CCTASs containing steps which insert positive reactivity into the core. (PBAPS Only).

   d. IF the SDM log values are below the cycle specific SDM value specified by NFM, THEN send the sequence to NFM for SDM evaluation. See FM-C-4.

4. Print the shuffle sequence and applicable ICA maps (if desired) via the Reports window and proceed to section 8.3 of this procedure.

8.1.4 IF the CCTAS are being generated interactively, THEN perform the following steps, Otherwise the following steps are N/A.

1. Ensure the following constraints are turned on in SHUFFLEWORKS:

   a. Shutdown Margin model specified by NFM in step 6.1.

   b. SRM or WRNM Connection Path (consistent with neutron instrumentation determined in step 6.4)

   c. SRM or WRNM Count Rate (consistent with neutron instrumentation determined in step 6.4)

   d. Fuel Movement Device Mast Orientation

   e. Control Rod Blade Support

   f. Fuel Movement Device Unusable locations

g. Once Burnt Bundle constraint specified by NFM in step 6.1.

2. Enter the SHUFFLE menu, select interactive shuffle planning.

   a. Move the desired component(s) from the initial ICA location to the desired ICA location.

3. Ensure all applicable constraints are met.

   a. Verify and save the sequence with SHUFFLEWORKS.

   b. **PBAPS ONLY:** IF sequence is required to be loaded into Refueling Platform Computer "Fuel Machine Sequence" (.fms) format, THEN perform the following:

      - Select Reports/Create fuel machine sequence
      - Select appropriate sequence source and planning sequence
      - Save the sequence to file (converts from .seq to .fms output)
      - Select "WRITE SEQUENCE TO A DISK FILE"
      - Enter "SHUFFLE" for output file name
      - Verify "SHUFFLE FMS" file was created
      - Copy this file to a disk and label disk with CCTAS title
      - CCTAS preparer shall initial and date the disk label.

   c. IF sequence involves moves in the core, THEN ensure SDM log values are above the cycle specific SDM specified by NFM. **CM-3**

      1. Confirm SDM Limit is correct in appropriate SDM Model.

      2. Perform ST-R-002-930-2(3) for CCTASs containing step which insert positive reactivity into the core. (PBAPS Only)

      3. IF the SDM log values are below the cycle specific SDM value specified by NFM, THEN send the sequence to NFM for SDM evaluation. See FM-C-4.

4. Print the shuffle sequence and applicable ICA maps (if

desired) via the Reports window AND proceed to section 8.3 of this procedure.

8.1.5 IF the CCTAS are being generated for core OR bundle offload/reload, THEN perform the following steps, Otherwise, the following steps are N/A.

1. Ensure the following constraints are turned on in SHUFFLEWORKS:

   a. SRM or WRNM Connection Path (consistent with neutron instrumentation determined in step 6.4)

   b. SRM or WRNM Count Rate (consistent with neutron instrumentation determined in step 6.4)

   c. Fuel Movement Device Mast Orientation

   d. Control Rod Blade Support

   e. Fuel Movement Device unusable locations

   f. Once Burnt Bundle constraint specified by FSD in step 6.1.

2. Enter the SHUFFLE menu, select interactive shuffle planning.

   a. Determine the required positioning of blade guides to support planned in-vessel maintenance activities.

   b. For each quadrant, move bundles from core to spent fuel pool using the following guidelines:

      1. IF SRMs were selected in step 6.4, THEN from core periphery, spiral toward the SRM leaving 4 fuel bundles around the SRM.

         IF WRNMs were selected in step 6.4, THEN from core periphery, spiral toward the WRNM detector leaving 4 fuel bundles around each WRNM.

      2. Remove fuel bundles from diagonally adjacent fuel cell locations in a cell where a double blade guide is to be located.

      3. Install a double blade guide where fuel was removed.

4. Remove remaining two bundles from the cell.

5. Perform steps 1 through 4 for all other core cells.

6. WHEN all other fuel has been offloaded, THEN remove last 16 bundles around the SRMs OR remove last 32 bundles around the WRNMs.

c. For each quadrant, move bundles from the spent fuel pool to the final core locations using the following guidelines: (Ref. 3.1.2)

1. Load 4 bundles around each SRM (IF SRMs were selected in step 6.4) OR each WRNM (IF WRNMs were selected in step 6.4). Place a note on the CCTAS prior to each step or group of steps stating the predicted count rates for the first four bundles surrounding each SRM or WRNM.

2. From the SRM OR WRNM, spiral towards core periphery

3. Load 2 fuel bundles in vacant locations

4. WHEN two fuel bundles are installed in a cell THEN remove blade guide.

5. Place fuel in vacant locations created by blade guide removal.

3. Verify AND save the sequences with SHUFFLEWORKS.

4. **PBAPS ONLY:** IF sequence is required to be loaded into Refueling Platform Computer "Fuel Machine Sequence" (.fms) format, THEN PERFORM the following:

- Select Reports/Create fuel machine sequence
- Select appropriate sequence source and planning sequence
- Save the sequence to file (converts from .seq to .fms output)
- Select "WRITE SEQUENCE TO A DISK FILE"
- Enter "RELOAD" OR "OFFLOAD" for output file name, as appropriate.
- Verify the appropriate FMS file was created
- Copy this file to a disk and label disk

with CCTAS title

- CCTAS preparer shall initial and date the disk label.

5. Print the offload/reload sequence AND applicable ICA maps (if desired) via the Reports window AND proceed to section 8.3 of this procedure.

8.1.6 During CCTAS execution, update CCTAS status log sheet (see Exhibit RE-C-40-2).

8.2 **CCTAS GENERATION WITHOUT SHUFFLEWORKS**

8.2.1 Generate CCTAS using a word processor.

1. The CCTAS shall contain the following information:

- Title
- Page #/total # of pages
- Written, reviewed, and authorized spaces
- Date
- Step #
- Component Serial #
- Orientation (when applicable)
- From location
- To location
- FHD signoff
- RPO signoff
- CRO signoff (when applicable)
- SRM/WRNM count rate columns consistent with neutron instrumentation determined in step 6.4 (when applicable).
- Date/Time for each step

8.2.2 IF generating CCTAS for LPRM replacement
THEN perform the following steps,
Otherwise, the following steps are N/A.

1. Use Exhibit RE-C-40-3A or RE-C-40-3B as a format/info guide (Separate CCTASs may be generated for batch removal/bending and for installation of LPRMs).

2. Identify LPRM to be replaced

3. Ensure blade guide does not interfere with LPRM

4. Specify LPRM removal and storage locations. Storage locations to avoid due to area radiation monitors are:

   a. LGS North Walls
   b. PBAPS Unit 2 North Wall
   c. PBAPS Unit 3 South Wall

5. Use LPRM serial number as core component ID

8.2.3 IF generating CCTAS for control rod withdrawal,
THEN perform the following steps.
Otherwise, the following steps are N/A.

1. Use Exhibit RE-C-40-4A or RE-C-40-4B as a format/info guide.

2. Identify control rods to be withdrawn

3. Verify cell is offloaded

4. Select control rod in offloaded cell

5. Withdraw control rod in offloaded cell

6. Uncouple control rod in offloaded cell

NOTE

Fuel Support Pieces and Guide Tubes must be returned to the same core cells they were removed from unless specifically noted in the CCTAS and agreed upon by NMD.

8.2.4 IF generating the CCTAS for control rod replacement,
THEN perform the following steps.
Otherwise, the following steps are N/A.

1. Use Exhibit RE-C-40-5A or RE-C-40-5B as a format/info guide

2. Identify control rod(s) to be replaced

3. Verify control rod is uncoupled

4. Remove blade guide from target cell

5. Remove fuel support piece from target cell

6. Remove spent control rod from cell to storage location

7. IF Guide Tube removal is required, THEN provide steps to:

   a. Place Blade Guide and Fuel Support Piece in storage locations.

   b. Remove Guide Tube and place in storage location (if required).

   c. Return Guide Tube to core cell.

   d. Pick up Fuel Support Piece and Blade Guide from storage locations.

8. Move new control rod from storage location to core cell

9. Replace fuel support piece in target cell

10. Replace blade guide in target cell

11. IF the NMD combined Blade/Fuel Support Piece grapple is to be used, THEN add appropriate notes stating that steps 5 and 6, and steps 8 and 9 above may be performed concurrently.

8.2.5 IF generating CCTAS for non-core transfer OR spent fuel assemblies transfer to/from cask,
THEN perform the following steps.
Otherwise, the following steps are N/A.

1. Use Exhibit RE-C-40-6A or RE-C-40-6B as a format/info guide

2. Identify core component to be transferred

3. Specify the starting and resting location of the core component.

8.2.6 IF SHUFFLEWORKS is unavailable AND CCTAS for offload/reload fuel moves as described in step 8.1.5 are required,
THEN perform the following step.
Otherwise, the following steps are N/A.

1. Use Exhibit RE-C-40-7A or RE-C-40-7B as a format/info guide

2. Perform Steps 8.1.5.2.a through 8.1.5.2.c.

8.2.7 Proceed to the section 8.3 of this procedure.

8.2.8 During CCTAS execution, update CCTAS status log sheet (see Exhibit RE-C-40-2).

8.3 **CCTAS REVIEW/APPROVAL/DISTRIBUTION**

8.3.1 The CCTAS preparer shall perform the following steps:

1. Ensure no unexplained/unexpected constraint violations exist. (Ref. 3.1.2)

2. Ensure component identification numbers, orientations and locations are correct. (Ref. 3.1.2)

3. Ensure moves containing known/suspected fuel failures are noted in CCTAS to facilitate HP monitoring/resolution of ARM alarms.

4. Annotate steps which insert or remove a bundle from next to an SRM/WRNM (if time allows).

5. Ensure accuracy and legibility. (Ref. 3.1.3)

6. Ensure the prepared by, reviewed by, AND authorized by names are printed on each sheet. **CM-1**

7. **PBAPS ONLY:** IF the shuffleworks file is to be loaded into the Refueling Platform computer, THEN ensure the prepared by, reviewed by AND authorized by names are printed on the electronic disk copy label.

8. For control blade AND LPRM replacements, ensure specific item types are placed in required locations. (Ref. 3.1.8)

9. Fill out appropriate information on CCTAS status log sheet (see Exhibit RE-C-40-2).

10. Generate AND sign the CCTAS Instruction/Approval sheet. (Exhibit RE-C-40-12) **CM-1**.

11. **PBAPS ONLY:** IF the shuffleworks file is to be loaded into the Refueling Platform Computer, THEN initial and date the electronic disk copy label.

12. Ensure Fuel Pool decay heat removal capacity has been demonstrated in accordance with RT-1-053-310-* for any increased heat load on Fuel Pool (LGS Only). **CM-5**

13. **PBAPS ONLY:** IF CCTAS moves the fuel to the final configuration, THEN perform the following:

    a. Step to the end of the sequence using SHUFFLEWORKS.

    b. Print "Current" core map AND spent fuel pool map.

    c. Verify "Current" core map matches Core Design Report (reference loading pattern).

    d. Complete Exhibit RE-C-40-14 AND attach to spent fuel pool map.

14. Complete Exhibit RE-C-40-1, "CCTAS Information / Verification Sheet"

8.3.2 The CCTAS reviewer shall perform the following:

1. Ensure no unexpected/unexplained constraint violations exist. (Ref. 3.1.2)

2. Ensure component identification numbers, orientations and locations are correct. (Ref. 3.1.2)

3. Ensure moves containing known/suspected fuel failures are noted in CCTAS to facilitate HP monitoring/resolution of ARM alarms.

4. Ensure steps which insert or remove a bundle from next to an SRM/WRNM are correctly annotated (if performed by preparer).

5. Ensure accuracy and legibility. (Ref. 3.1.3)

6. Ensure the preparer and authorized names are printed on each sheet. **CM-1**

7. **PBAPS ONLY:** IF the shuffleworks file is to be loaded into the Refueling Platform computer, THEN ensure the preparer and authorized names are printed on the electronic disk copy label.

8. For control blade AND LPRM replacement CCTAS, ensure specific item types are placed in required locations. (Ref. 3.1.8)

9. Ensure maximum heat load/temperature of SFP is within limits in accordance with RT-1-053-310-* for any increased heat load on Fuel Pool (LGS Only). **CM-5**

10. Complete Exhibit RE-C-40-1, "CCTAS Information / Verification Sheet"

11. Sign the CCTAS Instruction/Approval sheet. (Exhibit RE-C-40-12) **CM-1**

12. **PBAPS ONLY:** IF the shuffleworks file is to be loaded into the Refueling Platform Computer, THEN initial and date the electronic disk copy label.

13. **PBAPS ONLY:** IF CCTAS moves the fuel to the final configuration, THEN perform the following:

    a. Step to the end of the sequence using SHUFFLEWORKS.

    b. Print "Current" core map AND spent fuel map.

    c. Verify "Current" core map matches Core Design Report (reference loading pattern).

    d. Complete Exhibit RE-C-40-14.

8.3.3 The CCTAS authorizer shall:

1. Sign the CCTAS info Instruction/Approval sheet (RE-C-40-12) sheet indicating authorization to execute the steps. **CM-1**.

2. **PBAPS ONLY:** IF the shuffleworks file is to be loaded into the Refueling Platform Computer, THEN initial and date the electronic disk copy label.

8.3.4 Distribute copies of approved CCTAS to the following locations.

1. Control Room (when performing in-core moves or as requested for information only).

2. Refuel platform (2 copies plus electronic disk copy if required)

3. Other locations as deemed necessary by the evolution.(e.g., Fuel Floor Coordinator info only copy)

4. Cognizant personnel from Nuclear Fuel Management (Control Blade replacement CCTASs only)(Ref. 3.1.8)

5. Dry Cask Storage Campaign Personnel (For cask loading/unloading only)

8.4 CCTAS CHANGE PROCESS AFTER REVIEW/APPROVAL

NOTE

PBAPS ONLY: A pen and ink change made to the paper copy CCTAS does NOT require a change to the electronic copy CCTAS loaded in the Refueling Platform computer. Refueling Platform may be operated in the Manual Mode to execute the affected steps using the paper CCTAS. Full Automatic Mode operation using the electronic copy CCTAS loaded in the Refueling Platform computer may resume after completion of the pen and ink changed steps.

8.4.1 IF it is deemed necessary to change the CCTAS to support unanticipated conditions on the fuel floor, THEN perform the following steps. (Ref. 3.1.2)

1. Suspend CCTAS execution prior to execution of CCTAS step requiring change.

2. Contact a member of Reactor Engineering who is authorized to make changes as listed on the CCTAS instruction sheet, Exhibit RE-C-40-12.

3. Describe the reason for the change and a proposed revision

8.4.2 The Reactor Engineering group member contacted shall perform the following steps based on the information provided. (Ref. 3.1.3)

1. Evaluate the effect of the change on the remainder of the CCTAS sequence AND all other previously approved CCTAS's (including completed and partially completed sequences) AND make appropriate changes to maintain congruency of sequence.

2. IF all the changes involve one of the situations listed below, THEN the changes do not affect SDM AND can be processed as a pen & ink change.

   a. Blade guides

   b. LPRMs

   c. WRNMs

   d. Fuel in or being moved to the spent fuel pool

   e. Control rod blade changes in defueled cells or in the spent fuel pool

   f. Fuel in or being moved to or from a storage cask

   g. All of the bundles currently in the core are in their final configuration AND the fuel bundle(s) of interest are being moved to their final core configuration (final core reload pattern remains the same)

3. IF any of the changes involve a fuel assembly with a change in core configuration, THEN use SHUFFLEWORKS to ensure SDM is met in accordance with Section 8.1 and follow approval process in Section 8.3. **CM-3**

4. IF the changes do not adversely affect SDM, THEN perform the following:

   a. The Fuel Handling Director (or Designated Alternate) or Reactor Engineer shall perform pen & ink change on Refuel Floor copies.

   b. The Reactor Engineering group member shall perform pen & ink change on the original CCTAS AND troubleshooting guides when applicable. Updates pen & ink change log if used.

   c. The Reactor Engineering group member, Fuel Handling Director (or Designated Alternate) OR CRO shall perform the Pen & Ink change on the control room copy of the CCTAS (if applicable).

   d. The Reactor Engineering group member OR CCTAS Lead shall make the change to the sequence Saved in SHUFFLEWORKS.

e. The pen & ink change should follow the following format.

- Single line through item to be changed
- Date AND initials of both Fuel Handling Director (or Designated Alternate) AND Reactor Engineering group member

5. IF the change is believed to have a significant effect on decay heat calculations,
THEN consider reperforming RT-1-053-310-* AND follow approval process in Section 8.3 (LGS Only). **CM-5**

8.5 **CCTAS TROUBLESHOOTING GUIDE DEVELOPMENT**

8.5.1 IF desired,
THEN develop CCTAS troubleshooting guide so any changes can be evaluated appropriately.

1. The guide should contain the following information:

a. Appropriate CCTAS sequences

b. Maps at key milestones/configurations such as: (Ref. 3.1.2)

- LPRM's/WRNM's to be replaced
- CRD's requiring maintenance
- Control blades requiring replacement
- Core maintenance configuration

c. List of bundle K-infinity for fuel moved during refueling

d. Copy of RE-C-40

e. CCTAS Info sheet

f. Pen & Ink Change/CCTAS Revision Status Log.

g. Lists/maps of maintenance control blades and drives and LPRMS.

h. Lists/maps of previously inspected fuel pool locations suitable for item storage.

i. Copies of/support information for RE sign offs in any applicable FH procedures.

2. Provide troubleshooting guide to Reactor Engineering group members authorized to approve changes.

9.0 **DOCUMENTATION**

9.1 Completed CCTAS sheets AND electronic disk copy OR copies of contaminated sheets shall be returned to Reactor Engineering by the CCTAS users.

9.1.1 IF copies of contaminated CCTASs are received, THEN cover sheet should be annotated "Copy - Original Contaminated", initialed, and dated.

9.2 IF the CCTAS become contaminated, AND copies cannot be made, THEN the CCTAS originals can be used to document the completion of the CCTAS steps.

9.2.1 Note on the original CCTAS that field copies were contaminated and were executed between days X and Y.

9.3 Reactor Engineering shall periodically send completed CCTAS OR copies of appropriate CCTAS if contaminated, to NRMS and NFM (if required).

9.4 Update SHUFFLEWORKS files upon completion of the CCTAS. Every implemented CCTAS shall be incorporated in SHUFFLEWORKS regardless of whether or not the CCTAS appears to change the location/orientation of any fuel bundle. (Ref. 3.1.9)

9.5 Update SNM records in accordance with RE-C-044, Accountability and Control of SNM. If re-channeling has been performed, ensure channel serial number's are appropriately updated on the Fuel History Sheets.

9.6 Backup SHUFFLEWORKS files appropriately.

9.7 Provide copies of completed blade replacement CCTASs to FSD.

9.8 Provide copies of SHUFFLEWORKS sequence files (or copy of controlled CCTAS if not created with SHUFFLEWORKS) for all completed fuel moves to NFM for updating of SNM records/isotopic reports.

10.0 **EXHIBITS**

10.1 RE-C-40-1 CCTAS Info Sheet

10.2 RE-C-40-2 CCTAS Status Log

10.3 RE-C-40-3A Example CCTAS for LPRM Replacement (SRM only)

10.4 RE-C-40-3B Example CCTAS for LPRM Replacement (WRNM only)

10.5 RE-C-40-4A Example CCTAS for Blade Withdrawal (SRM Only)

10.6 RE-C-40-4B Example CCTAS for Blade Withdrawal (WRNM Only)

10.7 RE-C-40-5A Example CCTAS for Blade Replacement (SRM Only)

10.8 RE-C-40-5B Example CCTAS for Blade Replacement (WRNM Only)

10.9 RE-C-40-6A Example CCTAS for Non Core Transfers

10.10 RE-C-40-6B Example CCTAS for Spent Fuel Assemblies Transfers

10.11 RE-C-40-7A Example CCTAS for Core Transfers (SRM Only)

10.12 RE-C-40-7B Example CCTAS for Core Transfers (WRNM Only)

10.13 RE-C-40-8 Executing SHUFFLEWORKS

10.14 RE-C-40-9 LGS Unusable/Inaccessible Spent Fuel Pool Locations

10.15 RE-C-40-10 PBAPS Unusable/Inaccessible/Restricted Locations

10.16 RE-C-40-11 Core Map

10.17 RE-C-40-12 CCTAS Instruction/Approval Sheet

10.18 RE-C-40-13 SRM/WRNM Connectivity Constraint

10.19 RE-C-40-14 Final Configuration Map Checklist

10.20 RE-C-40-15 LGS Fuel Pool Cells Within Three (3) Feet Of Gate Seals

CCTAS INFORMATION/VERIFICATION SHEET

CCTAS Title: _____ Rev._____ Date:_____

File Name: _____ Directory: _____

Description of CCTAS: _____

Location/file name of Discharge Locations: _____

Location/file name of Temporary Storage: _____

NI's to be replaced: _____

Control Blades to be replaced/swapped: _____

Control Rod Drives to be worked: _____

Bundles to be Inspected/Sipped/Rechanneled/Reseated: _____

Constraints: (Circle/provide value or N/A if not applicable)

SDM Limit:				_____	(_____%)		N/A
SDM Model:				STROD2	STROD3		N/A
Neighborhood Size:	1	5	9	25	Full	Core	N/A
Exposed Assemblies around each SRM				1	2	3	N/A
Once Burned Assemblies around a Control Blade			1	2	3	4	N/A
Once Burned Face Adjacent Allowed			1	2	3	4	N/A
Minimum k-infinity Value for Once Burned Assemblies:				_____			N/A
Connectivity Path:			SRM		WRNM		N/A
Control Rod Blade Support			U___Core		U___Core	None	N/A
Unusable Locations:	U___SFP	U___SFP	U___Core		U___Core	None	N/A
Item Type Locations:	U___SFP	U___SFP	U___Core		U___Core	None	N/A
Fuel Movement Device Mast Orientation:	U___SFP	U___SFP	U___Core		U___Core	None	N/A

Date/WO of RT-1-053-310-* (LGS Only):_____

Spent Fuel Cask (PBAPS ONLY): S/N_____

Other Precautions and Limitations of RE-C-40 Section 7.0 met: Yes No (Exceptions Listed)

_____

Signature confirms that constraints/data provided above are correct and applied as specified AND that all verifications specified in Section 8.3.1/8.3.2(as appropriate) have been done:

Prepared By: _____ Date: _____

Reviewed By: _____ Date: _____

CCTAS STATUS LOG:

TAB #	CCTAS TITLE	CCTAS REV #	STATUS*	Steps Performed	DATE/TIME PERFORMED		ORIGINALS RETRIEVED**			Updated In	
					START	END	FHD	RPO	CRO	S/Works	SNM

* Ended or Canceled ** "X" if original or "Copy" if original was contaminated

SRM ONLY

Written By: _____

Reviewed By: _____

Authorized By: _____

Unit _____

Title EXAMPLE CCTAS FOR LPRM REPLACEMENT

STEP NO.	COMPONENT SERIAL NO.	MOVE FROM	ORIENT	MOVE TO	ORIENT	FHD	RPO	CRO	SRM COUNTRATE				DATE	TIME
									A	B	C	D		
1	LPRM X,YYY,ZZZ	XX-YY	NONE	BENDER	NONE				NA	NA	NA	NA		
2	LPRM X,YYY,ZZZ	BENDER	NONE	UNIT 1 SPENT FUEL POOL WALL	NONE				NA	NA	NA	NA		
	Above LPRM hung on Tag # _____													
3	LPRM X,YYY,ZZZ	FUEL FLOOR	NONE	XX-YY	NONE				NA	NA	NA	NA		

WRNM ONLY

Written By: _____

Reviewed By: _____

Authorized By: _____

Unit _____

Title EXAMPLE CCTAS FOR LPRM/WRNM REPLACEMENT

STEP NO.	COMPONENT SERIAL NO.	MOVE FROM	ORIENT	MOVE TO	ORIENT	FHD	RPO	CRO	WRNM COUNTRATE								DATE	TIME
									A	B	C	D	E	F	G	H		
1	LPRM/WRNM X,YYY,ZZZ	XX-YY	NONE	BENDER	NONE				NA	NA	NA	NA	NA	NA	NA	NA		
2	LPRM/WRNM X,YYY,ZZZ	BENDER	NONE	UNIT 2 SPENT FUEL POOL WALL	NONE				NA	NA	NA	NA	NA	NA	NA	NA		
	Above LPRM/WRNM hung on Tag # _____																	
3	LPRM/WRNM X,YYY,ZZZ	FUEL FLOOR	NONE	XX-YY	NONE				NA	NA	NA	NA	NA	NA	NA	NA		

SRM ONLY

Written By: _____

Reviewed By: _____

Authorized By: _____

Unit _____

Title EXAMPLE CCTAS FOR BLADE WITHDRAWAL

STEP NO.	COMPONENT SERIAL NO.	MOVE FROM	ORIENT	MOVE TO	ORIENT	FHD	RPO	CRO	SRM COUNTRATE				DATE	TIME
									A	B	C	D		
	Step 1 for each rod may be performed anytime after fuel movement has ceased for maintenance													
1	VERIFY CONTROL CELL 02-43 IS OFFLOADED							NA	NA	NA	NA	NA		
	The CRD/CRB Coordinator may sign as FHD for steps 2, 3, and 4													
2	SELECT CONTROL ROD 02-43						NA							
	WARNING: IF ANY SRM COUNTRATE DOUBLES INSERT CONTROL ROD TO POSITION 00													
3	WITHDRAW CONTROL ROD 02-43 TO POSITION 48						NA							
4	UNCOUPLE CONTROL ROD 02-43 PER M-C-747-011 OR M-C-741-301						NA		NA	NA	NA	NA		

WRNM ONLY

Written By: _____

Reviewed By: _____

Authorized By: _____

Unit _____

Title EXAMPLE CCTAS FOR BLADE WITHDRAWAL

STEP NO.	COMPONENT SERIAL NO.	MOVE FROM	ORIENT	MOVE TO	ORIENT	FHD	RPO	CRO	WRNM COUNTRATE								DATE	TIME
									A	B	C	D	E	F	G	H		
	Step 1 for each rod may be performed anytime after fuel movement has ceased for maintenance																	
1	VERIFY CONTROL CELL 02-43 IS OFFLOADED							NA	NA	NA	NA	NA	NA	NA	NA	NA		
	The CRD/CRB Coordinator may sign as FHD for steps 2, 3, and 4																	
2	SELECT CONTROL ROD 02-43						NA											
	WARNING: IF ANY WRNM COUNTRATE DOUBLES INSERT CONTROL ROD TO POSITION 00																	
3	WITHDRAW CONTROL ROD 02-43 TO POSITION 48						NA											
4	UNCOUPLE CONTROL ROD 02-43 PER M-C-747-011 OR M-C-741-301						NA		NA	NA	NA	NA	NA	NA	NA	NA		

Written By: _____

Reviewed By: _____

Authorized By: _____

Unit _____

Title EXAMPLE CCTAS FOR BLADE REPLACEMENT

STEP NO.	COMPONENT SERIAL NO.	MOVE FROM	ORIENT	MOVE TO	ORIENT	FHD	RPO	CRO	SRM COUNTRATE				DATE	TIME
									A	B	C	D		
1	VERIFY CONTROL ROD 30-47 IS UNCOUPLED						NA		NA	NA	NA	NA		
2	DBL B/G	31-48/29-46	NONE	HANG MN HOIST	NONE				NA	NA	NA	NA		
3	SUP PC	30-47	NW	HANG HOIST	NONE				NA	NA	NA	NA		
4	IF CRD EXCHANGE IN PROGRESS, THEN PERFORM STEPS 4A, 4B, & 4C, OTHERWISE, N/A STEPS 4A,4B, & 4C					NA	NA	NA	NA	NA	NA	NA		
4A	INFORM UNDERVESSEL TEAM OF INTENT TO REMOVE CRB						NA	NA	NA	NA	NA	NA		
4B	RAISE CRB 30-47 APPROXIMATELY 12 INCHES							NA	NA	NA	NA	NA		
4C	RECEIVE CONFIRMATION FROM UNDERVESSEL TO CONTINUE						NA	NA	NA	NA	NA	NA		
5	CRB	30-47	NONE	CBRCK 5N-1	NONE				NA	NA	NA	NA		
6	CRB H605	CBRCK 6N-4	NONE	30-47	NONE				NA	NA	NA	NA		
7	SUP PB	HANG HOIST	NONE	30-47	NW				NA	NA	NA	NA		

SRM ONLY

Written By: _____

Reviewed By: _____

Authorized By: _____

Unit _____

Title EXAMPLE CCTAS FOR BLADE REPLACEMENT

STEP NO.	COMPONENT SERIAL NO.	MOVE FROM	ORIENT	MOVE TO	ORIENT	FHD	RPO	CRO	SRM COUNTRATE				DATE	TIME
									A	B	C	D		
8	NOTIFY HCU/CRD COORDINATOR CRB 30-47 FULLY SEATED						NA		NA	NA	NA	NA		
9	DBL B/G	HANG MN HOIST	NONE	31-48/29-46	NONE				NA	NA	NA	NA		
10	CHECK SEATING OF DBL B/G WITH CAMERA							NA	NA	NA	NA	NA		

WRNM ONLY

Written By: _____

Reviewed By: _____

Authorized By: _____

Unit _____

Title EXAMPLE CCTAS FOR BLADE REPLACEMENT

STEP NO.	COMPONENT SERIAL NO.	MOVE FROM	ORIENT	MOVE TO	ORIENT	FHD	RPO	CRO	WRNM COUNTRATE								DATE	TIME
									A	B	C	D	E	F	G	H		
1	VERIFY CONTROL ROD 30-47 IS UNCOUPLED						NA		NA	NA	NA	NA	NA	NA	NA	NA		
2	DBL B/G	31-48/29-46	NONE	HANG MN HOIST	NONE				NA	NA	NA	NA	NA	NA	NA	NA		
3	SUP PC	30-47	NW	HANG HOIST	NONE				NA	NA	NA	NA	NA	NA	NA	NA		
4	IF CRD EXCHANGE IN PROGRESS, THEN PERFORM STEPS 4A, 4B, & 4C, OTHERWISE, N/A STEPS 4A,4B, & 4C					NA	NA	NA	NA	NA	NA	NA	NA	NA	NA	NA		
4A	INFORM UNDERVESSEL TEAM OF INTENT TO REMOVE CRB						NA	NA	NA	NA	NA	NA	NA	NA	NA	NA		
4B	RAISE CRB 30-47 APPROXIMATELY 12 INCHES							NA	NA	NA	NA	NA	NA	NA	NA	NA		
4C	RECEIVE CONFIRMATION FROM UNDERVESSEL TO CONTINUE						NA	NA	NA	NA	NA	NA	NA	NA	NA	NA		
5	CRB	30-47	NONE	SFP	NONE				NA	NA	NA	NA	NA	NA	NA	NA		
6	CRB H605	CBRCK 6N-4	NONE	30-47	NONE				NA	NA	NA	NA	NA	NA	NA	NA		
7	SUP PB	HANG HOIST	NONE	30-47	NW				NA	NA	NA	NA	NA	NA	NA	NA		

WRNM ONLY

Written By: _____

Reviewed By: _____

Authorized By: _____

Unit _____

Title EXAMPLE CCTAS FOR BLADE REPLACEMENT

STEP NO.	COMPONENT SERIAL NO.	MOVE FROM	ORIENT	MOVE TO	ORIENT	FHD	RPO	CRO	WRNM COUNTRATE								DATE	TIME
									A	B	C	D	E	F	G	H		
8	NOTIFY HCU/CRD COORDINATOR CRB 30-47 FULLY SEATED						NA		NA	NA	NA	NA	NA	NA	NA	NA		
9	DBL B/G	HANG MN HOIST	NONE	31-48/29-46	NONE				NA	NA	NA	NA	NA	NA	NA	NA		
10	CHECK SEATING OF DBL B/G WITH CAMERA							NA	NA	NA	NA	NA	NA	NA	NA	NA		

Written By: _____

Unit _____

Reviewed By: _____

Title EXAMPLE CCTAS FOR NON CORE TRANSFERS

Authorized By: _____

STEP NO.	COMPONENT SERIAL NO.	MOVE FROM	ORIENT	MOVE TO	ORIENT	FHD	RPO	DATE	TIME
1	LY8487	L2SPENT KK-158	SW	L1SPENT T-58	SW				
2	LY8488	L2SPENT KK156	SW	L1SPENT U-57	SW				
3	LY8811	L2SPENT KK-154	SW	L1SPENT U-56	SW				
4	LYN091	L2SPENT KK-152	SW	L1SPENT V-58	SW				
5	LY8812	L2SPENT KK-150	SW	L1SPENT V-56	SW				
6	LY8813	L2SPENT KK148	SW	L1SPENT W-58	SW				
7	LYN104	L2SPENT KK146	SW	L1SPENT W-57	SW				

Written By: _____

Reviewed By: _____

Authorized By: _____

Unit _____

Title EXAMPLE CCTAS FOR SPENT FUEL ASSEMBLIES TRANSFERS

STEP NO.	COMPONENT SERIAL NO.	MOVE FROM	ORIENT	MOVE TO	ORIENT	FHD	RPO	DATE	TIME
1	PYN521	P2SPENT C-22	N/A	CASK S/N_____ A-1	N/A				
2	PYG651	P2SPENT N-46	N/A	CASK S/N_____ G-1	N/A				
3	PYN463	P2SPENT C-21	N/A	CASK S/N_____ C-6	N/A				
4	PYG764	P2SPENT P-46	N/A	CASK S/N_____ F-5	N/A				
5	PJ1407	P2SPENT C-20	N/A	CASK S/N_____ A-7	N/A				

NOTE: See RE-C-44 Figure 10 for cask alphanumeric layout

SRM ONLY

Written By: _____

Reviewed By: _____

Authorized By: _____

Unit _____

Title EXAMPLE CCTAS FOR CORE TRANSFERS

STEP NO.	COMPONENT SERIAL NO.	MOVE FROM	ORIENT	MOVE TO	ORIENT	FHD	RPO	CRO	SRM COUNTRATE				DATE	TIME
									A	B	C	D		
1	LYN521	L1CORE 01-44	SE	L1SPENT C-22	NW									
2	LYG651	L1CORE 03-42	NW	L1SPENT N-46	SW									
3	DBL B/G	L1SPENT B-31/C-32	NONE	L1CORE 01-44/03-42	NONE									
4	LYN463	L1CORE 01-42	NE	L1SPENT C-21	SW									
5	LYG764	L1CORE 03-44	SW	L1SPENT P-46	SW									
6	YJ1407	L1CORE 19-52	SW	L1SPENT C-20	SW									
7	YJ1447	L1CORE 17-50	NE	L1SPENT C-18	SW									

WRNM ONLY

Written By: _____

Reviewed By: _____

Authorized By: _____

Unit _____

Title EXAMPLE CCTAS FOR CORE TRANSFERS

STEP NO.	COMPONENT SERIAL NO.	MOVE FROM	ORIENT	MOVE TO	ORIENT	FHD	RPO	CRO	WRNM COUNTRATE								DATE	TIME
									A	B	C	D	E	F	G	H		
1	PYN521	P2CORE 01-44	SE	P2SPENT C-22	NW													
2	PYG651	P2CORE 03-42	NW	P2SPENT N-46	SW													
3	DBL B/G	P2SPENT B-31/C-32	NONE	P2CORE 01-44/03-42	NONE													
4	PYN463	P2CORE 01-42	NE	P2SPENT C-21	SW													
5	PYG764	P2CORE 03-44	SW	P2SPENT P-46	SW													
6	PJ1407	P2CORE 19-52	SW	P2SPENT C-20	SW													
7	PJ1447	P2CORE 17-50	NE	P2SPENT C-18	SW													

EXECUTING SHUFFLEWORKS

1. Log on to LAN on SHUFFLEWORKS-loaded Computer. If SHUFFLEWORKS is running directly off of the PC desktop, then verify with NFM that the correct version of shuffleworks is being run.

2. Double-click on SHUFFLEWORKS icon.

3. Change data directory using the "set-up" menu option.

4. Load appropriate plant information using the "set-up" window option.

5. Follow program prompts/pull-down menu options in order to execute the desired SHUFFLEWORKS functions.

LGS UNUSABLE/INACCESSIBLE SPENT FUEL POOL LOCATIONS

UNIT 1

BINDING:

A-11	R-14	Z-18	JJ-23
A-35	T-18	AA-69	KK-16
G-21	U-19	EE-47	SS-23
P-20	X-22	FF-70	SS-35
Q-19	X-34	GG-23	VV-22
Q-21	Y-15	JJ-11	X-42
CC-43	HH-38	S-52	T-51
T-52	T-53	U-52	

OBSTRUCTED

A-77	
KK-77 through TT-77	
LL-88 through SS-88	

BAD FUEL

B-14	JJ-18 through JJ-22
D-12	KK-18
J-31	KK-20
K-32	KK-22
L-23	KK-23
M-24	LL-15
CC-21	LL-17
DD-16 through DD-22	LL-19
EE-16	LL-43
EE-18 through EE-22	RR-20
[illegible]-16 through FF-23	RR-22
[illegible]-16	RR-51
GG-18 through GG-22	UU-18
HH-16 through HH-22	UU-22
JJ-16	

TEST COUPONS ADJACENT TO THE FOLLOWING CELLS

P-58	BB-70	Z-70	Q-58
T-58	DD-70	EE-70	R-58
CC-70		Y-70	

OTHER

FF-63
NN-36
K-23
X-1
V-1
HH-47
QQ-36
SS-36
SS-39

UNIT 2

COVERED BY LABELS

B-2 thru B-18, A-19 thru A-66,B-73 thru B-84
R-2 thru R-84
LL-72 thru LL-85, U-79 thru KK-79
AB-19 thru AB-70
A-1 thru T-1, U-5 thru ZZ-5
A-85 thru T-85
U-56 thru ZZ-56
U-21 thru ZZ-21
E-44 thru 49
E-67 thru 71

OBSTRUCTED BY GATE BRACKETS

AB-53 thru AB-59, AB-49 thru AB-51
AB-26 thru AB-33, AB-36

OBSTRUCTED	OBSTRUCTED BY CLIPS	
A-1 thru A-3, A-50	S-3	V-20
A-82 thru A-85	S-17	KK-20
B-1 thru B-3	S-20	NN-20
B43, B50, and B73	S-35	YY-20
B-82 thru B-85	S-38	
C-1 thru C-4	S-53	V-55
C50 and C73	S-56	KK-55
C-82 thru C-85	S-70	NN-55
D-1 thru D-4	S-73	YY-55
D-82 thru D-85	S-83	
E-1 thru E-5	A-3	
E-82 thru E-85	A-17	
F-1 thru F-6	A-74	
F-82 thru F-85	A-83	
G-1 thru G-6	V-4	
H-1 thru H-3	KK-4	
J-1 thru J-3	NN-4	
K-1 thru K-3	YY-4	
ZZ-1 thru ZZ-3	V-80	
AB-1 thru AB-4	JJ-80	

BAD FUEL

K-15

OTHER

L-83	T-9	T-11	U-52	FF-69	FF-70	ZZ-22

INACCESSIBLE DUE TO LEVEL SWITCH

N-84	P-84	Q-84
N-85	P-85	Q-85

INACCESSIBLE DUE TO REFUEL BRIDGE ACCESS

All of Rows 1, 2, and 85

TO PREVENT UNPLANNED MOVEMENT

8 Bundles around coupon tree

Exhibit RE-C-40-10 PBAPS UNUSABLE/INACCESSIBLE SPENT FUEL POOL LOCATIONS

POTENTIAL MAST CAMERA INTERFERENCE PERIPHERAL CORE LOCATIONS (Both Units)

01-18	11-06	43-02	55-12
01-44	11-56	43-60	55-50
05-12	17-02	49-06	59-18
05-50	17-60	49-56	59-44

UNIT 2	UNIT 3
Covered by rack markers:	**Covered by rack markers:**
A-25 thru WW-25,	A-17 THRU LL-17, YY-18 thru HHH-18,
XX-21 thru XX-55	LL-1 thru LL-20, MM-20 thru XX-20,
Fuel Pool Gate Heavy Load Path:	NN-21 thru NN-55
A-21 thru A-55	**Fuel Pool Gate Heavy Load Path:**
Boraflex Liner Damage:	A-21 thru A-55
JJ-30, MM-30	**FPM Mounting Concerns:**
Boraflex Coupon:	HHH-2 thru HHH-5, HHH-19 thru HHH-22
Q-1, S-1	
Damaged DBG:	**Boraflex Coupon:**
T-71/S-72	CCC-71
Failed Fuel Pin:	**Dechanneled Bundle:**
CCC-71	Z-51
Debris:	**Bowed Bundles:**
LLL-30, LLL-33	X-54, EE-57
Other:	**Other:**
G-2, GGG-3	S-72 thru XX-72
EEE-66 thru KKK-66	II-45, JJ-46, GGG-2, HHH-2
EEE-67 thru EEE-71	GGG-66 ("skeleton" bundle)
S-72 thru XX-72	
JJ-22	
Unusable Fuel Locations:	**Unusable Fuel Locations:**
BB-18, BB-19, BBB-25, BBB-3,	AA-39, AAA-14, AAA-7, BB-36,
BBB-4, CC-13, CC-15, CC-16,	BBB-13, BBB-15, BBB-19, BBB-20,
CCC-6, DD-13, DD-16, DD-17, DD-18,	BBB-21, BBB-3, BBB-61, BBB-63,
DD-19, DD-20, DD-21, DD-22, DD-23,	BBB-64, CCC-2, D-22, DD-26, DD-58, E-1,
DD-24, EEE-5, F-18, F-21, FFF-3	EE-37, EE-5, EE-6, F-17,
GG-21, HHH-17, JJ-12, KK-12, LL-12,	HH-12, HH-18, HH-4, HH-56, HH-62,
NN-7, P-19, PP-51, PP-55, PP-7,	HH-64, HH-7, HHH-11, HHH-14,
PP-8, QQ-8, RR-10, T-55, U-18, U-19,	HHH-17, II-10, II-19, II-61, JJ-8,
V-18, WW-67, YY-65, YY-7, ZZ-2,	K-41, KK-55, L-31, L-41, LL-15, LL-20,
ZZ-3, ZZ-4, ZZ-5	LL-54, LLL-32, M-6, MM-9, N-40,
	NN-16, O-40, OO-54, PP-17, PP-5,
	PP-53, PP-7, QQ-53, QQ-54, QQ-62,
	QQ-68, QQ-8, SS-53, SS-54, SS-55,
	SS-6, T-13, TT-13, TT-54, U-38, U-9,
	VV-16, VV-17, W-13, W-38, W-39,
	W-7, X-37, X-54, Y-36, YY-67, YY-8,
	Z-39, Z-51, Z-68, ZZ-67, ZZ-68

CORE MAP

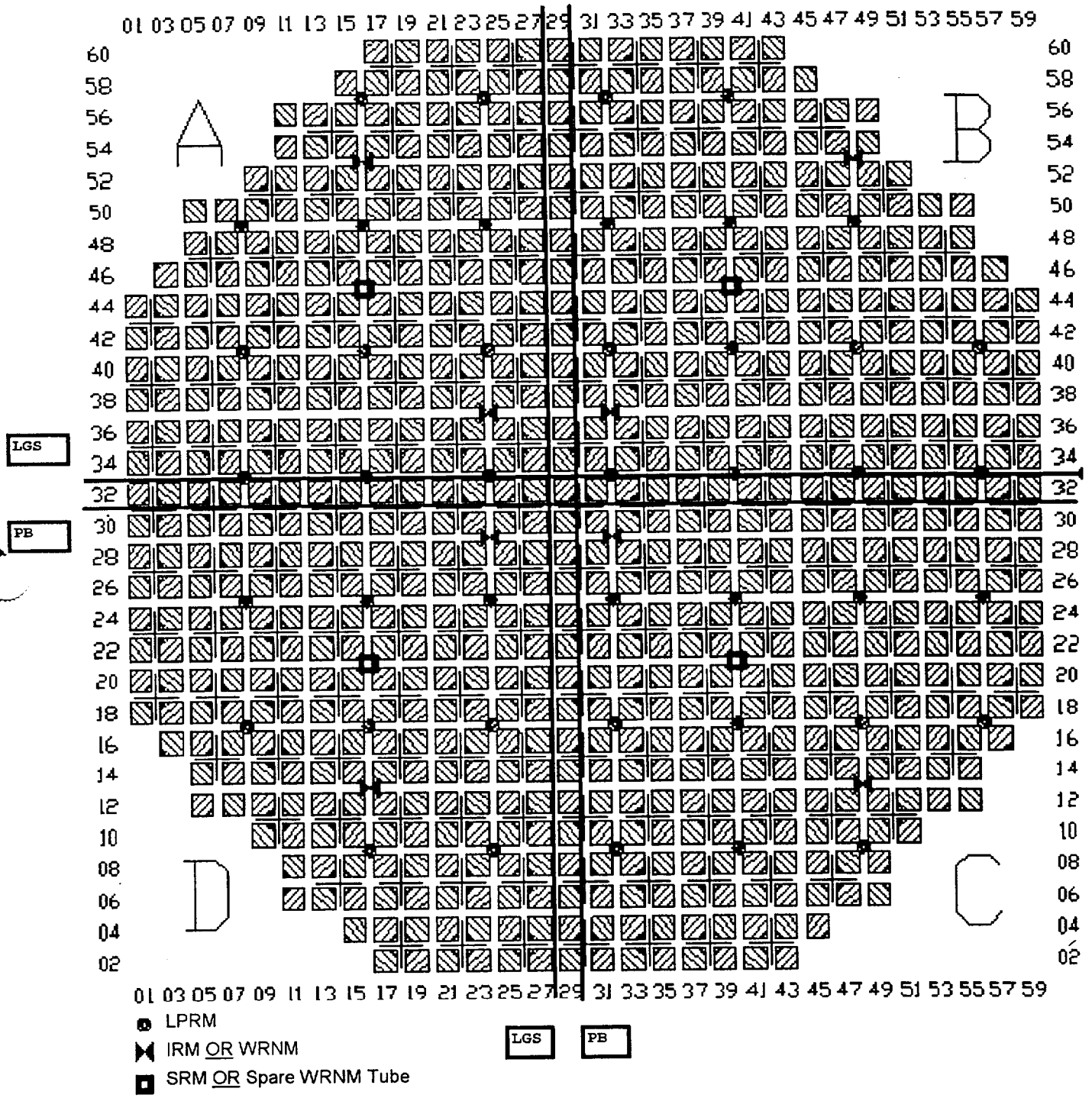
01 03 05 07 09 11 13 15 17 19 21 23 25 27 29 31 33 35 37 39 41 43 45 47 49 51 53 55 57 59
60 58 56 54 52 50 48 46 44 42 40 38 36 34 32 30 28 26 24 22 20 18 16 14 12 10 08 06 04 02
A
B
C
D
LGS
PB
LPRM
IRM OR WRNM
SRM OR Spare WRNM Tube

CCTAS Instruction/Approval Page

(Sample Sheet Only)

Core Component Transfer Authorization Sheet Page _____ of ____

Unit _____ Date _____

Title _____ (Rev. #) _____

1. This CCTAS provides the moves necessary to ...
2. This CCTAS assumes that SRM A, B, C, D (or WRNM A through H) are in service.
3. *(Guidance on placement of a fuel bundle which cannot be placed in original target location, e.g. SRMs/WRNM inoperable or in an emergency)*
4. This CCTAS must be used in conjunction with appropriate maintenance procedures.
5. This CCTAS must be used in conjunction with appropriate fuel handling procedures.
6. This CCTAS must be used in conjunction with appropriate spent fuel procedures.
7. All changes to this CCTAS must be made in accordance with procedure RE-C-40.
8. This CCTAS involves the transfer of Special Nuclear Material (SNM). SNM transfers shall be controlled in accordance with procedure RE-C-44.
9. Return completed CCTAS (or a copy if original is contaminated) to Reactor Engineering.
10. *(RE contacts and phone numbers)*

(etc.)

Prepared By: _____
Reviewed By: _____
Authorized By: _____

SRM/WRNM CONNECTIVITY CONSTRAINT

The SRM or WRNM connectivity constraint consistent with the neutron instrumentation determined in step 6.4 is to be used for in-core shuffles and will also be applied to offload/reload.

Face Adjacent Rules:

1. A continuous face adjacent path must exist between each bundle and an operable SRM OR between each bundle and at least one operable WRNM.

2. The only exceptions to rule #1 are bundles that fulfill the diagonal coupling rules.

Diagonal Coupling Rules:

1. It is permissible for single fuel bundles ONLY to be diagonally connected to an array of face adjacent fuel bundles. No other fuel bundles can be connected to the single diagonally adjacent fuel bundle except per rule #2.

2. In addition to the diagonally adjacent connection path allowed by rule #1, two fuel bundles diagonally adjacent within the same control cell are considered connected.

FINAL CONFIGURATION MAP CHECKLIST

		Preparer	Reviewer
1.	"Current" Final Configuration core map matches Core Design Report.	_____	_____
2.	Discharge fuel bundles identified on spent fuel pool map.	_____	_____
3.	New fuel/reinsert bundle empty locations identified on spent fuel pool map.	_____	_____
4.	Reload bundle (temporary) empty locations identified on spent fuel pool map.	_____	_____
5.	Discharge bundles and empty locations on preparer's map matched reviewer's map.	_____	_____
6.	Previously completed Exhibit RE-C-40-14 AND spent fuel pool map discarded.	_____	_____

LGS FUEL POOL CELLS WITHIN THREE (3) FEET OF GATE SEALS

Per AT EWR A0004257, irradiated fuel which has decayed for less than 5 years cannot be stored within three (3) feet of the fuel pool gate seals. This is to support justification for extending the seal lifetime from 5 to 10 years. This constraint is conservatively assumed to include gate storage locations as well as gate locations in place.

UNIT 1 SPENT FUEL POOL

Cattle Chute Gate Storage:

(North Side)
E-77 through BB-77
E-88 through BB-88
E-1 through BB-1
E-2 through BB-2
E-3 through BB-3
F-4 through AA-4
(South Side)
V-64 through V-70
W-64 through W-70
X-64 through X-70
Y-64 through Y-70
Z-64 through Z-70
AA-65 through AA-70
BB-66 through BB-70

Cattle Chute Gate In Place:

A-25 through A-46
B-25 through B-46
C-25 through C-46
D-25 through D-46
E-25 through E-46
F-26 through F-45

Cask Pit Gate In Place:

RR-77, RR-88, RR-1 through RR-16
SS-77, SS-88, SS-1 through SS-16
TT-77, TT-88, TT-1 through TT-16
UU-77, UU-88, UU-1 through UU-16
VV-77, VV-88, VV-1 through VV-16

UNIT 2 SPENT FUEL POOL

Cattle Chute Gate Storage:

(North Side)
VV-44 through VV-64
WW-43 through WW-65
XX-43 through XX-65
YY-43 through YY-65
ZZ-43 through ZZ-65
AB-43 through AB-65
(South Side)
VV-22 through VV-42
WW-21 through WW-43
XX-21 through XX-43
YY-21 through YY-43
ZZ-21 through ZZ-43
AB-21 through AB-43

Cattle Chute Gate In Place:

VV-33 through VV-53
WW-32 through WW-54
XX-32 through XX-54
YY-32 through YY-54
ZZ-32 through ZZ-54
AB-32 through AB-54

Cask Pit Gate In Place:

A-1 through A-20
B-1 through B-20
C-1 through C-20
D-1 through D-20
E-1 through E-20
F-1 through F-19

TITLE: Control Rod Removal Using Combined Grapple - Alternate Path Due to Rod Coupled

TASK PERFORMED BY: _____ EVALUATOR: _____

EVALUATOR SIGNATURE: _____ DATE: _____

DIRECTIONS TO EVALUATOR:

At the start of the JPM, provide the candidate with the sheets marked "Candidate-Start of JPM"

During the JPM , provide 4 additional color figures of combined grapple where the JPM directs.

EVALUATION METHOD :

SIMULATE

EVALUATION LOCATION:

REFUEL FLOOR

APPROXIMATE COMPLETION TIME:

Completion Time: 20 minutes

IMPORTANCE RATING(S): 3.3

SYSTEM NUMBER(S): 2.2.32

REFERENCES:

M-C-741-301 Rev 13, CONTROL ROD BLADE, FSP AND CONTROL ROD GUIDE TUBE REMOVAL

TASK STANDARD(S):

Aux hoist operation terminated upon notification of rod coupling per M-C-741-301

TASK CONDITIONS:

1. Unit __3__ is in the maintenance configuration.
2. Control cell 42-19 is being disassembled using the NES combined grapple and the frame mounted aux hoist
3. Core configuration is shown on the attached core map
4. Attachment 12 as-posted is provided and was filled in by the previous FHD
5. The CCTAS is provided
6. All prerequisites for control rod blade exchanges are met
7. The double blade guide from 42-19 is hanging from the main hoist

INITIATING CUES:

You have been directed by the CRS to continue CRB exchanges with CCTAS Step 63 per M-C-741-301 Step 5.18.4

Critical Element(s) indicated by "*" in Performance Checklist.

PERFORMANCE CHECKLIST:

STEP	STANDARD	SAT/UNSAT
1. Verify FSP gripper and interlock flags are both HALF RED circles CUE: **Provide Grapple Status Sheet #1**	Verify grippers are half red	
2. *Per CCTAS, position grapple over CRB/FSP to be moved CUE: (Have candidate indicate location of cell for 42-19 on the attached core map.) "The grapple is positioned over core where you indicated."	Bridge and trolley moved to the area over 42-19 using console or pendant 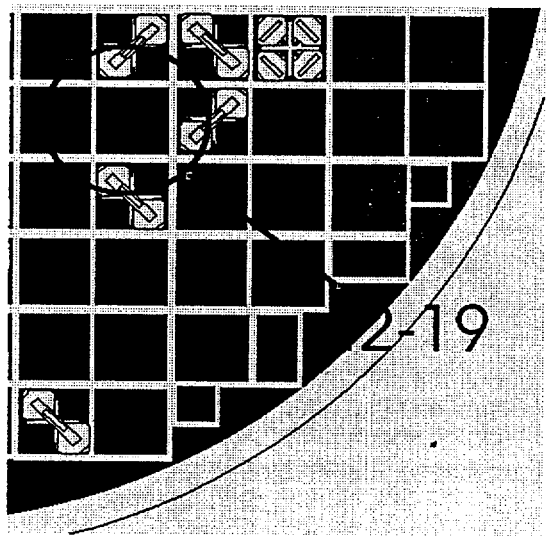	
3. *Rotate hoist cable to orient grapple with two red indicating arrows pointing toward corner of top guide opening as follows: PBAPS-Southwest CUE: Arrows are pointing Southwest	Rotate grapple until arrows are Southwest	
4. *Carefully lower grapple through the top guide while checking load cell and camera monitor for indication of hang-up CUE: The grapple is being lowered	Grapple lowered using LOWER button on pendant control	

STEP	STANDARD	SAT/UNSAT
5. *Continue lowering grapple until seated and the cable is slack CUE: The grapple is seated and the cable is slack	Grapple lowered through the top guide until seated and the cable is slack	
6. If performing the first of multiple CRB exchanges, then raise the empty grapple and record the indicated weight on Attachment 12, then re-seat grapple onto FSP	N/A- Already recorded	
7. Pull down and hold air hoses to verify there is no tension on the hoses CUE: The hoses are not under tension	Hoses checked for tension and held	
8. Ensure grapple is fully seated by performing the following checks:	N/A	
a. If any adjacent fuel cell is vacant, then visually check grapple is fully seated on FSP CUE: Camera is checked and it indicates the grapple is fully seated on the fuel support piece	Camera checked for correct seating	
b. Safety bend cable and verify solid stop of grapple CUE: Solid stop of grapple is verified using a safety bend	Safety bend checked	
Note: Stroke of FSP air cylinder should cause grapple frame to raise ¼ inch		
Caution Do not manipulate hoist cable for at least 8 seconds following pendant operation. Premature manipulation of hoist cable could result in improper grappling of FSP		
9. *Depress ENGAGE pushbutton and visually verify FSP gripper flag indicates full red circle CUE: **Provide Grapple Status Sheet #2**	ENGAGE button depressed and gripper flag verified full red	

STEP	STANDARD	SAT/UNSAT
Note: Attachment 12 may be available as reference for expected weight indication. Normal weight indication for grappled FSP only is roughly 260 lbs and normal weight indication for FSP+CRB is roughly 460 lbs.		
10. *Ensure at least 8 seconds have elapsed since pendant operation, then while monitoring weight indicationraise grapple approximately 3 inches then STOP CUE: Hoist is raised approximately 3 inches	Grapple raised approximately 3 inches then hoist motion is stopped	
11. *Verify FSP is grappled by checking the following: CUE: **Provide Grapple Status Sheet #3**	N/A	
a. Weight indication is consistent with a grappled FSP	Weight indication verified from Status Sheet #3 as correct	
b. FSP gripper interlock flag indicates full red circle	Gripper interlock verified from Status Sheet #3 as full circle	
12. If performing first of multiple CRB exchanges, then record indicated weight for FSP lift on Attachment 12	N/A	
13. *Raise hoist an additional 6 inches, then verify the following:	Hoist raised	
a. *Weight indication is consistent with a grappled FSP + CRB CUE: **Provide Grapple Status Sheet #4**	Recognize that weight is excessive and rod indicates coupled. Discontinue raising CRB.	
b. CRB Flag is full yellow	Flag verified full yellow	
CUE: You have reached the termination point for the JPM. You may stop here		

Comments:

Note: Any grade of UNSAT requires a comment.

JPM Overall Rating: _____
SAT/UNSAT

TASK CONDITIONS:

1. Unit __3__ is in the maintenance configuration.
2. Control cell 42-19 is being disassembled using the NES combined grapple and the frame mounted aux hoist
3. Core configuration is shown on the attached core map
4. Attachment 12 as-posted is provided and was filled in by the previous FHD
5. The CCTAS is provided
6. All prerequisites for control rod blade exchanges are met
7. The double blade guide from 42-19 is hanging from the main hoist

INITIATING CUES:

You have been directed by the CRS to continue CRB exchanges with CCTAS Step 63 per M-C-741-301 Step 5.18.

CANDIDATE – Start of JPM

WEIGHT INDICATIONS DURING CRB EXCHANGE
(Hoist Raising Direction)

- FSP Lift*: 260

(Mark N/A if using GE Combined Grapple)

- CRB Lift: N/A

(Mark N/A if using NES Combined Grapple)

- FSP + CRB Lift: 460

(Combined Grapple only)

- Grapple Empty: 120

* When using NES Combined Grapple, FSP only weight can only be detected within approx. the first 3 inches of grapple motion.

CANDIDATE – Start of JPM

TRANSFER AUTHORIZATION FOR M-C-741-301
M-219966 Rev. 1/89
DOCTYPE 113

WRNM ONLY

Unit PEACH BOTTOM ATOMIC POWER STATION Date 6/3/02
Title TRAINING CCTAS

Written By: *TRAINING USE ONLY*
Reviewed By: *TRAINING USE ONLY*
Authorized By: *TRAINING USE ONLY*

STEP NO.	COMPONENT SERIAL NO.	MOVE FROM	ORIENT	MOVE TO	ORIENT	FHD	RPO	CRO	WRNM COUNTRATE								DATE	TIME
									A	B	C	D	E	F	G	H		
61	VERIFY CONTROL ROD 42-19 IS UNCOUPLED						NA	jeb	NA	NA	NA	NA	NA	NA	NA	NA	Today	10 min ago
62	DBL B/G	41-20/43-18	NONE	HANG MN HOIST	NONE	gib	vap		NA	NA	NA	NA	NA	NA	NA	NA	Today	5 min ago
63	SUP PC	42-19	NW	HANG HOIST	NONE				NA	NA	NA	NA	NA	NA	NA	NA		
64	IF CRD EXCHANGE IN PROGRESS THEN PERFORM STEPS 64A, 64B, & 64C, OTHERWISE, N/A STEPS 64A, 64B, & 64C					NA	NA	NA	NA	NA	NA	NA	NA	NA	NA	NA		
64A	INFORM UNDERVESSEL TEAM OF INTENT TO REMOVE CRB					NA	NA	NA	NA	NA	NA	NA	NA	NA	NA	NA		
64B	RAISE CRB 42-19 APPROXIMATELY 12 INCHES						NA	NA	NA	NA	NA	NA	NA	NA	NA	NA		
64C	RECEIVE CONFIRMATION FROM UNDERVESSEL TO CONTINUE					NA	NA	NA	NA	NA	NA	NA	NA	NA	NA	NA		
65	CRB	42-19	NONE	CBRCK 5N-1	NONE				NA	NA	NA	NA	NA	NA	NA	NA		
66	CRB H605	CBRCK 6N-4	NONE	42-19	NONE				NA	NA	NA	NA	NA	NA	NA	NA		

CANDIDATE – Start of JPM

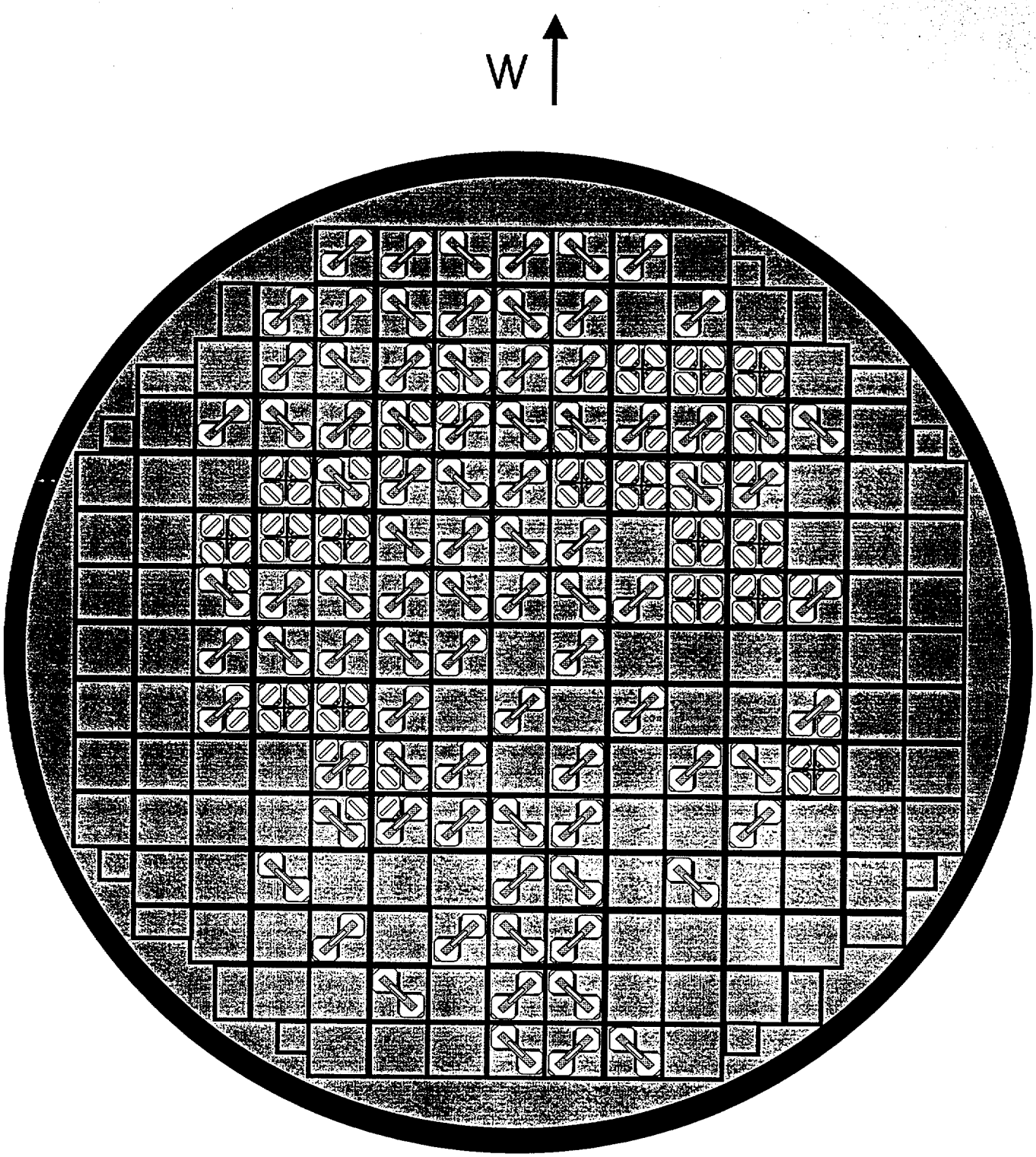

PBAPS JPM 3 Core Overhead View

CANDIDATE- Start of JPM

Grapple Status Sheet #1

All Flags 45 degrees

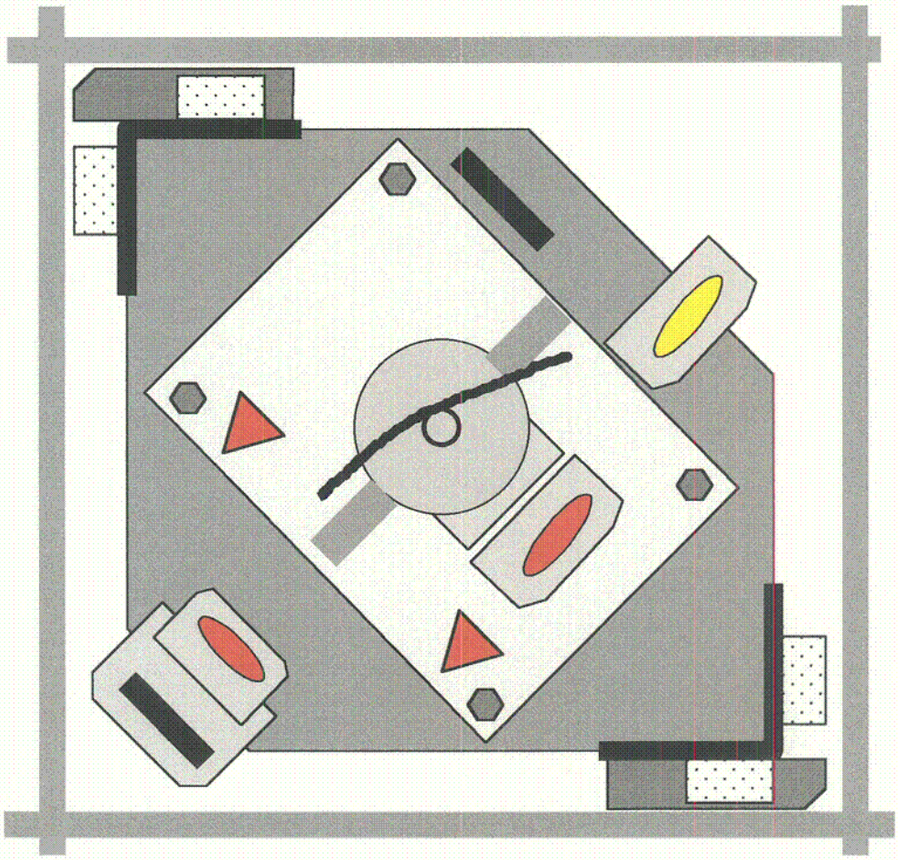

CANDIDATE

PB JPM 3

Grapple Status Sheet #2

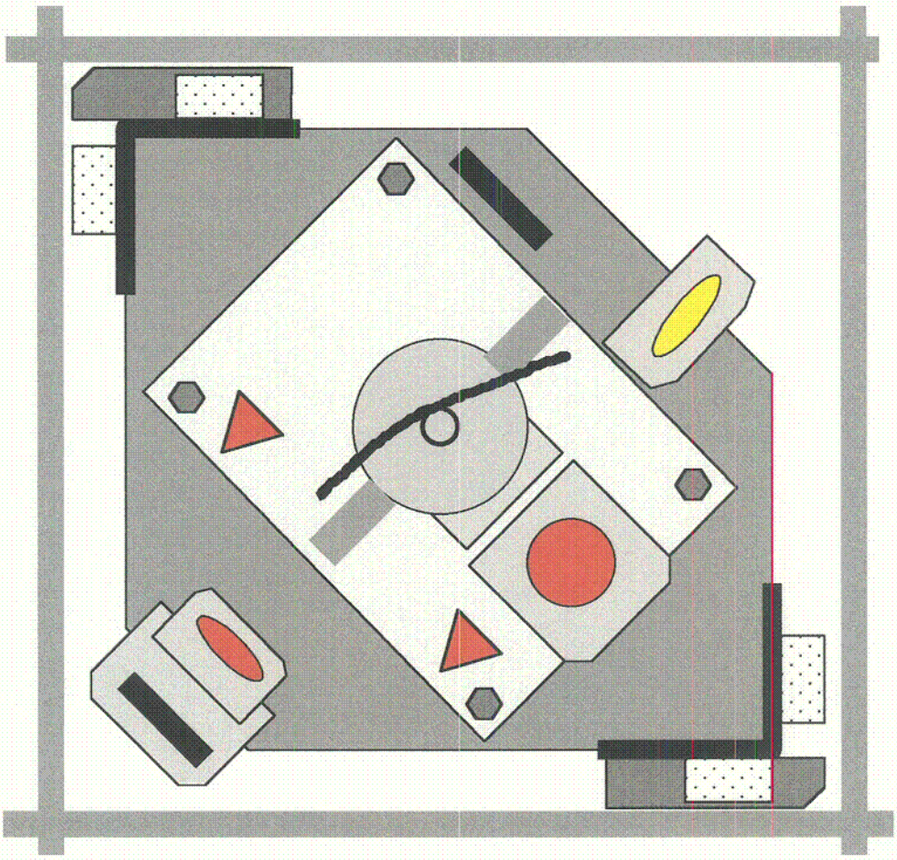

CANDIDATE

PB JPM 3

Grapple Status Sheet #3

Weight = 260 LBS

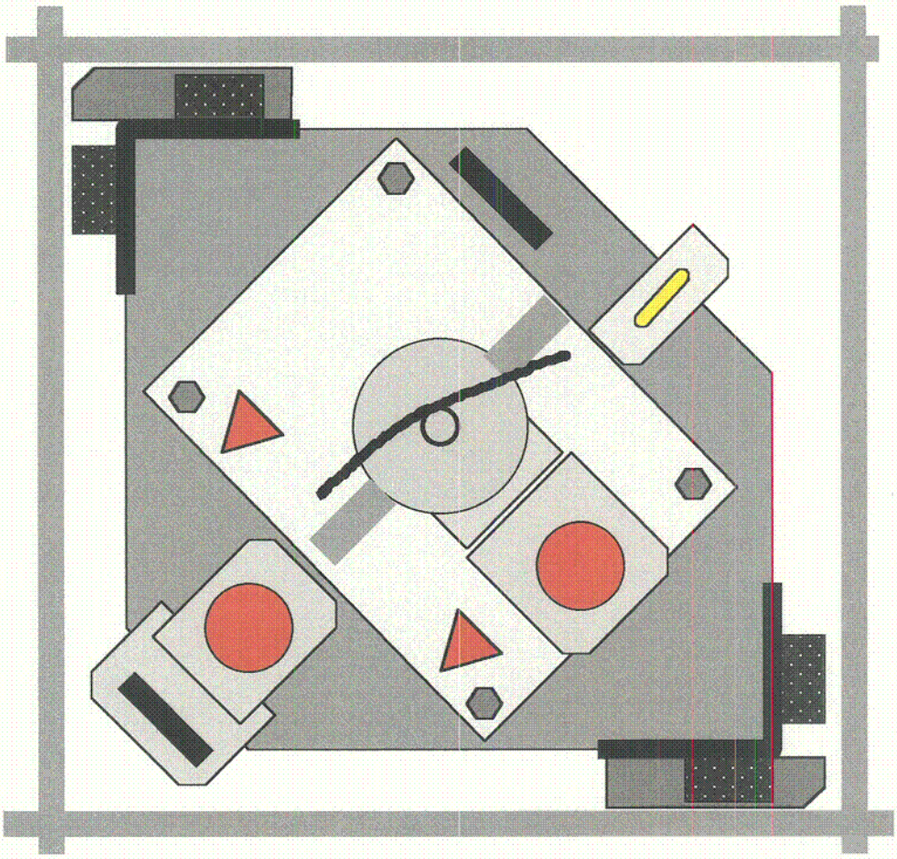

CANDIDATE

PB JPM 3

Grapple Status Sheet #4

Weight = 540 LBS after raising 6 inches

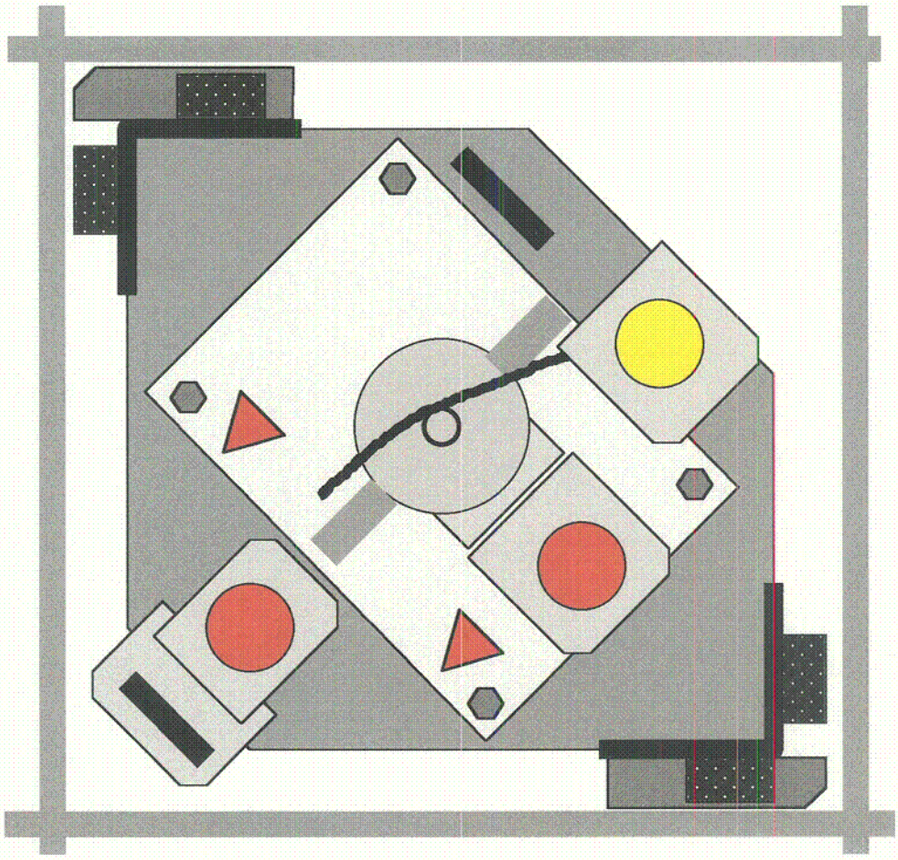

CANDIDATE

PB JPM 3

	LGS	PB
S/R	YES	YES
EQ	NO	NO
50.59	NO	NO

Exelon Nuclear

CONTROL ROD BLADE, FSP AND CONTROL ROD GUIDE TUBE REMOVAL AND INSTALLATION

1.0 **PURPOSE**

1.1 Provide instructions for above vessel unlatching, removal, and installation of control rod blades (CRB), including the removal and installation of the corresponding fuel support piece (FSP), blade guide, and guide tube seal. This procedure also provides instructions for guide tube vacuuming.

1.2 Section 5.0 of this procedure has been divided into the following subsections:

5.1 CRB Uncoupling Preparation
5.2 Tooling Set-Up and Checkout
5.3 Blade Guide Removal
5.4 FSP Removal Using FSP Grapple
5.5 CRB Removal Using CRB Grapple
5.6 CRB Uncoupling and Removal Using CRB Latch Tool
5.7 CRB Guide Tube Seal Installation
5.8 CRB Guide Tube Seal Removal
5.9 CRB Installation Using CRB Latch Tool
5.10 CRB Installation Using CRB Grapple
5.11 FSP Installation Using FSP Grapple
5.12 Blade Guide Installation
5.13 Rod Insertion and Restoration of One-Rod-Out Interlock
5.14 Guide Tube Removal
5.15 Guide Tube Installation
5.16 CRB Replacement Using GE Combined Grapple
5.17 Control Rod Guide Tube Vacuuming
5.18 CRB/FSP Replacement Using NES Combined Grapple
5.19 FSP Only Removal and Installation Using NES Combined Grapple
5.20 CRB Swap Using NES Combined Grapple

2.0 APPARATUS AND SPECIAL EQUIPMENT

2.1 Test Equipment and Special Tools

NOTE: The following list contains more equipment and tools than would typically be used. Selection should be based on availability and status of tool examination.

2.1.1 CRB Latch Tool

2.1.2 CRB Grapple

2.1.3 FSP Grapple

2.1.4 Grid Guide

2.1.5 Underwater Camera System

2.1.6 Underwater Pole(s)

2.1.7 Guide Tube Seal

2.1.8 Jet Pump Grapple

2.1.9 Guide Tube Grapple

2.1.10 "J" Hook(s)

2.1.11 "L" Hook(s)

2.1.12 "Dummy" PIP Plug(s)

2.1.13 Top Frame for FSP Grapple (optional)

2.1.14 Grapple, Control Rod/FSP (combined grapple either GE or NES)

2.1.15 Grid Guide for GE Combined Grapple

2.1.16 Jib Arm, for positioning frame mounted auxiliary hoist cable, PB only (ref AR 1246121 E03).

2.1.17 Cable guard for frame mounted auxiliary hoist cable opening in cab roof, when using Jib Arm Tool (PB only).

2.1.18 Tri-Nuke 260 vacuum, with 80 to 100 ft hose with attached Control Rod Guide Tube vacuum head (optional), second suction port either capped or with ball valve, 5 micron or larger filter (recommended to maximize flow), operable flow meter recommended.

2.1.19 Light weight handling pole with integral stud bracket for temporary in-vessel storage of vacuum head (optional).

2.1.20 Buoyancy balls (floats) to assist with Guide Tube vacuum pole handling (if desired)

2.1.21 Beam assembly for staging combined grapple in pool (ref A1246121 E02).

2.2 Materials

2.2.1 110 ft. nylon rope for guide tube seal

2.2.2 70 ft. nylon rope for guiding vacuum hose

2.2.3 Loctite, A-C-96 approved for Class I use

2.3 Support Services

2.3.1 Health Physics

3.0 PRECAUTIONS AND LIMITATIONS

3.1 Precautions

3.1.1 A radiological survey shall be performed by Health Physics when removing any item from the Fuel Pool, Reactor Cavity, or Equipment Pool.

3.1.2 Debris or foreign material introduced into RPV has the potential to become a future radiological hazard or cause equipment damage. Extreme care should be exercised in maintaining cleanliness and foreign material exclusion. **CM-5**

3.1.3 The jam block on the Refueling Platform auxiliary hoist shall be set such that irradiated components remain at the specified depth below the water surface. The jib arm tool causes the hoist cable terminal to rise as tool is actuated; therefore, when using jib arm, jam block setting must be performed as specified herein to account for this effect. Furthermore, if jib arm use is suspended, then jam block will require resetting. **CM-4**

3.1.4 Retracting (un-cranking) jib arm tool with CRB attached to grapple while positioned over any area other than CRB rack or reactor vessel may result in contact between CRB and surrounding structure/component.

3.1.5 Never use more than one swivel adapter on the refueling platform frame-mounted or monorail hoist cables. The upper female thread is not the same size as the lower thread and therefore is not compatible. **CM-8**

3.1.6 When attaching any grapple OR tool to an auxiliary hoist cable swivel adapter, ensure adapter is threaded into tool's square stud to view port AND Jam Nut is torqued to 25-30 ft-lbs.

3.1.7 When moving air operated tools through the Top Guide, monitor the air hose so that it does not slacken and jam between the Top Guide and the tool.

3.1.8 When not in use, main grapple must be Normal Up and auxiliary hoists positioned to prevent damaging hoist cables, attached tools or core components during movement of the Refueling Platform.

3.1.9

LIMERICK

FSP grapple orientation and engagement lights are for indication only and are not mechanically interlocked with grapple operation.

PEACH BOTTOM

Precaution 3.1.9 does not apply.

3.1.10 Items posing significant radiation hazards (reference A-C-132) hanging from curb must be lowered below top of spent fuel rack elevation prior to CRB removal concurrent with CRD removal.

DRAINAGE HAZARD MITIGATION BARRIER, SEE LIMITATION 3.2.15

3.1.11 Replacement of grapple for handling CRB to a different style grapple (e.g., combined grapple to CRB grapple) will require re-performance of ST-6-097-630-* OR ST-6-107-633-* to set jam block (LGS) or resetting of jam block per Subsection 5.2 (PB).

3.1.12 During use of Reactor Vessel Inspection/Repair equipment, travel path through refueling slot may be obstructed. Ensure travel path will remain clear prior to commencing control cell disassembly.

3.1.13 IF NES Combined Grapple is UNLOADED with pendant ``RELEASE'' pushbutton depressed, the FSP Interlock will ENGAGE under the following conditions:

1. STOP pushbutton is depressed.

2. Power supply to the bridge is interrupted.

3. FAULT LOCKOUT occurs.

The interlock must be reset to proceed.

3.2 Limitations

3.2.1 Load handling over irradiated fuel shall be suspended upon loss of fuel floor secondary containment. In lieu of operable secondary containment, the acceptability of load handling operations (without secondary containment) may be evaluated and documented in accordance with PECO Calculation LM-033 (ref. 7.3.1) or other engineering approved evaluation.

3.2.2 Suspend component handling upon any unanticipated decrease of fuel pool or cavity water level AND refer to ON-120 (LGS) OR ON-124 (PB).

3.2.3 Do not place any core components on the drywell seal plate unless an evaluation of the potential changes to radiological conditions is performed by Rad Engineering.

3.2.4 In-vessel Work activities shall be supervised by qualified Fuel Handling Directors. (ref. 7.2.17)

3.2.5 All hardware and fasteners must be positively secured with lockwire, tackwelds, cotter pins, or other approved method to prevent any part from dropping into RPV, Fuel Pool, or Equipment Pool. Jam nuts are not an approved method.

3.2.6 Verifications have been established and shall be implemented in accordance with A-C-33.

3.2.7 The information required to complete the specific maintenance activity as listed on the WO needs to be recorded on the MT. All signoffs and data blanks NOT required should be marked N/A to indicate the steps have not been missed unintentionally.

3.2.8 If any system or equipment required to perform the work, including those specified in FH-105 (LGS) or FH-6C (PBAPS), becomes inoperable or malfunctions, stop operations until the required system or equipment is returned to service.

3.2.9 Subsections of Section 5.0 may be performed out of sequence or in parallel to suit field conditions per the discretion of the Fuel Handling Director (FHD). However, all core component transfers shall be performed as specified on the CCTAS. Re-seating a CRB or FSP (component not raised out of core) is not considered a core component transfer and does not require a CCTAS.

3.2.10 Maintenance Supervision shall be notified immediately of abnormal "As Found" conditions. Abnormal conditions and corrective actions taken shall be documented in the Remarks Section of the MT.

3.2.11 The Refueling Platform shall be operated in accordance with the applicable System Operating Procedures.

3.2.12 Steps of this procedure performed per the CCTAS shall be DOUBLE VERIFIED by the RPO AND FHD, and documented on the CCTAS.

3.2.13 Installation and removal of one-rod-out interlock bypass plugs shall be performed only with approval via the HCU/CRD Coordinator.

3.2.14 Personnel on refuel platform shall have means of direct (dedicated) communication to Control Room.

3.2.15 Steps outlined in a single line box represent barriers agreed upon in LGS PORC meeting 92-141 to prevent vessel drainage or inadvertent criticality. Changes to these steps or to any others which may affect the integrity of these barriers must receive approval from Reactor Engineering in addition to the minimum required for temporary changes. **CM-7**

3.2.16 This procedure does not direct, control or in any way provide instructions on Control Rod motion. For specific direction on Control Rod motion see references 7.2.2 or 7.2.12.

3.2.17 The jib arm tool has been evaluated for use only at PBAPS. It shall not be used at LGS.

3.2.18 Fuel Floor Auxiliary Platform at Peach Bottom may remain on the rails during CRB exchanges (by the Refuel platform) when CRB exchange locations are within the first 6 control cell rows on the fuel pool side of the core (Unit 2:rows 38 through 58; Unit 3 rows 02 through 22). If the Pole Caddy is not installed, refuel platform access is improved by one cell (i.e. Unit 2: row 34 can be accessed; Unit 3: row 26 can be accessed with Aux Platform on rails).

4.0 **PREREQUISITES**

NOTE: Section 5.2 ``Tooling Set-up and check-out‘‘ may be performed in parallel with completion of prerequisites.

4.1

LIMERICK

1. IF using a Combined grapple, THEN **VERIFY** CRB rack locations to be used for off-loading CRBs contain CRB rack spacers.

2. IF control rod guide tube(s) are to be stored in LGS CRB storage rack, THEN **VERIFY** CRB storage locations to be used for Guide Tubes do not contain a CRB spacer.

3. Before handling CRBs, **ENSURE** jam block on monorail or frame mounted auxiliary hoist has been set by performance of ST-6-107-633-* OR ST-6-097-630-*. Jam block shall be set such that CRB remains at least 6 feet 6 inches below water surface in accordance with Technical Specification 3/4.9.6. **CM-4**

4. **ENSURE** ST-6-097-630-* OR ST-6-107-633-* is in surveillance prior to control rod blade handling as required.

5. **ENSURE** FH-105 Prerequisites are complete.

6. **ENSURE** S97.1.A is completed as required during performance of this procedure.

PEACH BOTTOM

1. **ENSURE** FH-6C Prerequisites are complete.

2. **ENSURE** SO 18.1.C-2(3) is completed as required during performance of this procedure.

4.2 **ENSURE** Clearance has been applied to HCU AND Clearance is active.

4.3 **ENSURE** water clarity AND lighting in Reactor Cavity/RPV are satisfactory to support this work as determined by the FHD.

4.4 **ENSURE** communications are established between Refueling Platform, HCU/CRD control point, and unit Reactor Operator.

4.5 **ENSURE** access to upper elevations of Drywell has been restricted AND Drywell radiation monitoring has been established as required prior to movement of an irradiated core component through cattle chute OR over Drywell seal plate.

4.6 **ENSURE** FHD Shift Turnover Record is completed at the beginning of each shift.

4.7 **ENSURE** CCTAS is approved AND distributed.

4.8 **VERIFY** new CRBs to be installed have been examined AND are stored in Fuel Pool in rack locations specified on CCTAS. **CM-9**

4.9 **VERIFY** all grapples selected to be used have been inspected and checked out in accordance with an outage preparation Work Order.

4.10 **ENSURE** a guide tube seal with at least 110 Ft. of rope attached is available for emergency use from the Refuel Platform.

VESSEL DRAINAGE BARRIER, SEE LIMITATION 3.2.15

4.11 **CONTACT** Shift Supervisor to ensure required steps of applicable General Plant (GP) procedures are complete AND **REQUEST** permission to begin CRB replacement.

4.12 **INITIAL** AND **DATE** MT to indicate Precautions and Limitations have been reviewed and are understood AND Prerequisites are complete.

5.0 PROCEDURE

5.1 CRB Uncoupling Preparation

5.1.1 **VERIFY** SCT clearance has been applied to HCU.

> **CAUTION**
>
> Minimize the amount of time HCU is un-isolated prior to the uncoupling sequence to minimize risk associated with an inadvertent scram signal.

5.1.2 **REQUEST** permission from HCU/CRD coordinator to open valves:

1. ▒ Withdraw Riser Isolation Valve▒
   (LGS: 47-*-02, PBAPS: HV-*-3A-13102)

2. ▒ Insert Riser Isolation Valve▒
   (LGS: 47-*-01, PBAPS: HV-*-3A-13101)

> **WARNING**
>
> Operate valves in the following order to prevent possible injury or equipment damage.

5.1.3 **NOTIFY** personnel to prepare HCU as follows:

1. **ENSURE** OPEN; "Withdraw Riser Isolation Valve".
   (LGS: 47-*-02, PBAPS: HV-*-3A-13102)

2. **ENSURE** OPEN; "Insert Riser Isolation Valve".
   (LGS: 47-*-01, PBAPS: HV-*-3A-13101)

5.2 Tooling Set-Up and Checkout

NOTE: Steps in this sub-section may be performed out of sequence or in parallel at the discretion of the Fuel Handling Director or Lead Maintenance Technician.

> **CAUTION**
>
> Radioactive water may be present in air lines. Health Physics should monitor performance of the next step.

5.2.1 While Health Physics monitors conditions, carefully **BLEED** refuel platform dual air line into rag or other suitable location to remove any moisture.

5.2.2 IF combined grapple will be used at PBAPS, THEN **ENSURE** auxiliary hoist, Hoist Loaded trip set point has been adjusted as required per M-004-100 to prevent Rod Block generation.

NOTES:

1. Step 5.2.3 is to be performed at the Fuel Handling Director's or Lead Maintenance Technician's discretion to perform a final check of NES Combination grapple.
2. Status indicators operate by gravity and will have to be operated by hand to verify operation with grapple in horizontal position.

5.2.3 **PERFORM** the following sub-steps as required to perform final check of NES Combined Grapple:

1. **INSTALL** Interlock quick release pin through pivot and mounting plate to disable FSP grapple mechanism interlock.
2. IF not already connected, THEN **CONNECT** air supply hoses to grapple quick connects.
3. **TEST** operation of pneumatic cylinders, grapple mechanisms, and status indicators by depressing pendant ``RELEASE'' and ``ENGAGE'' push-buttons as necessary.
4. **CHECK** all fittings for air leaks.

NOTE: The next sub-step restores operation of FSP grapple mechanism interlock.

5. **PLACE/ENSURE** grapple mechanisms in the RELEASE position, THEN **REMOVE** interlock quick release pin AND **PLACE** in its stored position.

6. IF FSPs are NOT to be handled separately, THEN **ENSURE** CRB grapple quick release pin is in its stored position.

NOTE: The next sub-step disables the CRB grapple mechanism if FSPs are to be handled separately.

7. IF FSPs are to be handled separately, THEN **INSTALL** CRB grapple quick release pin through CRB hook support frame and hook.

8. IF grapple is not already installed OR being installed on hoist immediately, THEN **DISCONNECT** air supply hoses previously connected.

NOTE: Step 5.2.4 is to be performed at the Fuel Handling Director's or Lead Maintenance Technician's discretion to perform a final check of GE combination grapple.

5.2.4 **PERFORM** the following sub-steps as required to perform a final check of GE Combined Grapple:

1. With grapple in vertical position resting on FSP or other suitable surface, **CHECK** for free vertical motion of sliding hook assembly.

2. Using in-vessel mockup, **VERIFY** that aluminum guides on underside of grapple frame are adjusted such that with the wide sections of the guides entered into the FSP, the following two conditions exist simultaneously. IF required, THEN **ADJUST** guides AND **SECURE** with lockwire OR approved locktite.

   a. Approximately 1/16'' clearance between guides and FSP openings exists, i.e. grapple can only be shifted approximately 1/16'' in the direction in line with the two diagonal flow holes which the guides are inserted into.

   b. With tool held in a position such that all clearance is removed such that the interlock pin on the grapple is as close to the FSP as it can get, approximately 1/16'' clearance exists between pin and side of FSP, i.e. the pin should not be able to contact FSP.

3. While manually operating interlock pin, **CYCLE** grapple AND **VERIFY** plunger hook assemblies only operate when interlock pin is actuated. **LEAVE** grapple in disengaged (RELEASE) condition AND **ENSURE** interlock pin is released.

5.2.5 IF Top Frame will be used on FSP grapple, THEN **PERFORM** the following:

1. Carefully **EXAMINE** top frame for any twists or distortion; any noticeable twists will cause grapple to bind in FSP.

2. **REMOVE** two hex bolts holding existing grapple stud AND **ATTACH** Top Frame with the two hex bolts.

3. **TIGHTEN** bolts wrench tight, THEN **SECURE** bolts using approved loctite OR lockwire.

NOTE: At Limerick only, when mounting any CRB handling tool onto monorail or frame mounted auxiliary hoist, IF hoist jam button is moved, THEN it shall be reset by performance of applicable section of ST-6-107-633-* OR ST-6-097-630-*. **CM-4**

5.2.6

LIMERICK

CONNECT control rod grapple or combined grapple or latch tool or guide tube grapple to auxiliary hoist (monorail preferred) AND FSP grapple (or top frame) to other auxiliary hoist if required as follows:

1. Using a single hoist cable swivel adapter, **THREAD** adapter into grapple stud past view port in grapple stud.

2. **TORQUE** swivel adapter jam nut to 25-30 ft-lbs.

3. **CONNECT** dual air line to grapple AND **ROTATE** locking sleeves so coupling can not inadvertently come apart.

PEACH BOTTOM

CONNECT control rod grapple or combined grapple or latch tool or guide tube grapple to frame hoist AND FSP grapple (or top frame) to monorail hoist, if required as follows:

1. Using a single hoist cable swivel adapter, **THREAD** adapter into grapple stud past view port in grapple stud.

2. **TORQUE** swivel adapter jam nut to 25-30 ft-lbs.

3. **CONNECT** dual air line to grapple AND **ROTATE** locking sleeves so coupling cannot inadvertently come apart.

5.2.7 **CYCLE** all grapples to ensure proper operation. **RETURN** all grapples to RELEASE position.

NOTES: At Limerick only, IF standard grid guide will be used with CRB grapple, THEN grid guide should be installed before grapple is placed in water because air lines exit grapple in the path of a grid guide support rib.

5.2.8

LIMERICK

IF using CRB grapple with grid guide, THEN **ATTACH** standard grid guide(s) to hoist(s) as follows:

1. **DISCONNECT** grapple air lines as required to install grid guide.
2. **POSITION** guide over hoist cable AND visually **VERIFY** alignment of slot in bottom of guide with pin on grapple.
3. **ENSURE** cable is taut AND is positioned within clamp near top of guide.
4. **ENSURE** guide is seated firmly against grapple AND **HAND TIGHTEN** clamp assembly handle firmly.
5. **RE-CONNECT** grapple air lines, routing air lines around grid guide rib as required, AND **SECURE** air lines to grid guide as necessary to avoid pinching hoses when using grapple.

PEACH BOTTOM

Step 5.2.8 does not apply.

NOTE: Step 5.2.13 contains needed information supporting performance of the following step. For NES combined grapple, it is important to ensure CRB grapple is Full Down prior to making marks.

5.2.9 Measuring from reference point specified below, **MARK** hoist cable OR grapple frame with tape mark(s) representing water coverage (reference Step 5.2.13).

- Combined grapple, CRB grapple and CRB Latch tool: **MEASURE** from saddle of grapple CRB hook.
- FSP grapples: **MEASURE** from bottom face of grapple body.
- Guide tube grapple: **MEASURE** from top edge of cylindrical body (where tabs are mounted).

NOTE: Overhead crane should be used for lifting combined grapple OR FSP grapple with top frame installed.

5.2.10 Carefully **UPRIGHT** grapple as required.

NOTE: Use of a Grid Guide OR Top Frame on the FSP grapple is recommended to facilitate orienting FSPs and avoiding interference while raising grapple through reactor Top Guide.

5.2.11 IF desired, THEN **ATTACH** standard grid guide(s) to hoist(s) as follows:

1. **POSITION** guide over hoist cable AND visually **VERIFY** with underwater camera alignment of slot in bottom of guide with pin on grapple.

2. **ENSURE** cable is taut AND is positioned within clamp near top of guide.

3. **ENSURE** guide is seated firmly against grapple AND **HAND TIGHTEN** clamp assembly handle firmly.

4. **SECURE** grapple air lines to guide using tape.

5.2.12 **INSTALL** GE combined grapple grid guide as required as follows:

1. **PLACE** guide on mounts at top of grapple with the "L" latches pointing towards hoist cable.

2. **SEAT** guide on mounts AND while pushing down on Tee handle, **TURN** each latch 90 degrees (one turns clockwise, one counter clockwise).

3. **LIFT UP** on guide to verify it is latched to grapple.

4. **PLACE** hoist cable within rollers on top of guide, THEN **CLOSE** AND **PIN** gate with ball lock pin.

5. **SECURE** air lines to grid guide as necessary.

5.2.13

LIMERICK

1. **ENSURE** jam block on auxiliary hoist is set so that core components other than CRBs hanging from hoist remain at least 6' 6'' below water surface.

PEACH BOTTOM

1. IF jib arm tool will NOT be used, THEN **SET** jam block so that core components hanging on the hoist will remain at least 6' 6'' below the water surface.

NOTE: Approved water coverage over CRBs for PB when using jib arm tool is six feet zero inches (6' - 0[illegible]). The following steps are prerequisites steps for achieving this water coverage.

2. IF jib arm tool will be used, THEN **ENSURE** hoist cable OR grapple frame is marked at 6' 0'' AND 6' 10''.

3. IF using jib arm tool THEN **SET** jam block, so that with cable hanging plumb (normal position), there is 6' 10'' water shielding over CRB hook saddle.

4. IF jib arm tool will be used, THEN **PERFORM** the following to install the jib arm tool:

   a. **ATTACH** a rope lanyard to jib arm tool, THEN position tool on operator cab handrail.

   b. **APPLY** a small amount of loctite to thread area of the four swing bolts.

   c. **POSITION** all four clamps around cab handrail AND **TIGHTEN** four swing bolts snug tight; Do NOT over tighten.

   d. **ATTACH** jib arm AND install ball lock pin.

   e. **INSTALL** jib hand crank AND **INSTALL** ball lock pin.

   f. **ENSURE** cable guard is installed at frame mounted hoist cable opening (outside edge) in Operator cab roof.

   g. **OPERATE** jib arm AND **VERIFY** smooth operation. **ADJUST** interlock status display as required.

5.3 Blade Guide Removal

5.3.1 **POSITION** Refueling Platform main hoist over core location per CCTAS.

5.3.2 FHD AND RPO (spotter) **VERIFY** correct double blade guide is about to be removed.

VESSEL DRAINAGE BARRIER, SEE LIMITATION 3.2.15

5.3.3 IF CRB is coupled, THEN **REQUEST** RO to verify CRB is withdrawn to position 48.

5.3.4 IF CRB is uncoupled, THEN **REQUEST** HCU/CRD Coordinator to verify CRB is uncoupled.

5.3.5 Using applicable refuel platform system operating procedure, **REMOVE** blade guide from designated core location AND **STORE** per CCTAS.

5.4 FSP Removal Using FSP Grapple

NOTE: Anti-Rotation Pins are oriented with control cell as follows:

Limerick - NORTHWEST
Peach Bottom - SOUTHWEST

5.4.1 **POSITION** FSP grapple over core location per CCTAS.

5.4.2 At PBAPS only, **DEPRESS** ``ENGAGE'' push-button on hoist pendant control.

5.4.3 **LOWER** FSP grapple down through top guide, with grapple oriented to properly align with anti-rotation pin at corner of control cell.

5.4.4 **CONTINUE TO LOWER** grapple below top guide to just above FSP.

5.4.5 **ENSURE** ``RELEASE'' push-button on hoist pendant control is actuated.

5.4.6 **LOWER** FSP grapple fully onto FSP.

NOTE: Attachment 12 is intended to serve as an aid in the performance of this procedure when multiple FSP/CRBs are to be handled. It is recommended that a completed attachment 12 be posted on the refueling platform for reference.

5.4.7 IF performing first of multiple CRB exchanges, THEN **RAISE** empty grapple AND **RECORD** indicated weight on Attachment 12, THEN **RESEAT** grapple onto FSP.

5.4.8 **PULL DOWN** on AND **HOLD** air hoses to verify there is no tension in hoses.

5.4.9 **ACTUATE** ``ENGAGE'' push-button on hoist pendant control AND **PAUSE** a minimum of 10 seconds to allow air cylinders to stroke.

NOTE: Attachment 12 may be available as reference for expected weight indication. Normal weight indication for grappled FSP is roughly 160 lbs.

5.4.10 **VERIFY** FSP is captured by FSP grapple by manually lifting FSP grapple enough to take weight of FSP.

5.4.11 **BUMP** hoist up approximately 6 inches.

5.4.12 IF performing first of multiple FSP removals, THEN **RECORD** indicated weight on Attachment 12.

5.4.13 **RAISE** FSP grapple through top guide and above core.

5.4.14 IF FSP is to be stored, THEN, per CCTAS, fully **LOWER** FSP at storage location AND WHILE actuating any necessary interlock mechanism, **DEPRESS** ``RELEASE'' push-button on hoist pendant control.

5.5 CRB Removal Using CRB Grapple

5.5.1 **POSITION** CRB grapple over core location per CCTAS.

5.5.2 **REQUEST** HCU/CRD Coordinator to verify CRB is UNCOUPLED AND two cell separation criteria is met (ref. 7.2.2, 7.2.12).

NOTE: Peach Bottom CRB bail handles are single handles (not cruciform). PBAPS CRB Grapple must be properly oriented to engage bail. Camera should be used as necessary to check bail handle and grapple orientation.

5.5.3 **LOWER** CRB grapple through top guide until grapple is properly seated on CRB bail handle.

5.5.4 IF performing first of multiple CRB exchanges, THEN **RAISE** empty grapple AND **RECORD** indicated weight on Attachment 12, THEN **RESEAT** grapple onto CRB.

5.5.5 **PULL DOWN** on AND **HOLD** air hoses to verify there is no tension in hoses.

5.5.6 **ACTUATE** ``ENGAGE'' push-button on hoist pendant control.

5.5.7 **VERIFY** CRB is captured by manually lifting CRB grapple enough to take weight of CRB.

NOTE: Attachment 12 may be available as reference for expected weight indication. Normal weight indication for grappled CRB is roughly 240 lbs.

> **CAUTION**
>
> Monitor hoist weight indication for a consistent load as blade is being raised to verify CRB is uncoupled from its associated drive.

5.5.8 SLOWLY **RAISE** CRB approximately 12 inches.

5.5.9 IF weight display indicates CRB is coupled, THEN IMMEDIATELY **STOP** AND **NOTIFY** shift supervision AND maintenance supervision.

5.5.10 IF CRD exchange is being performed concurrently with this procedure, THEN **REQUEST** undervessel personnel to verify NO gross leakage is present from open CRD housing(s).

1. IF gross leakage is present, THEN IMMEDIATELY **LOWER** CRB until fully seated AND **NOTIFY** RO AND **SUSPEND** blade removal operations.

VESSEL DRAINAGE BARRIER, SEE LIMITATION 3.2.15

5.5.11 IF performing first of multiple CRB exchanges, THEN **RECORD** indicated weight on Attachment 12.

5.5.12 **RAISE** CRB through top guide and above core.

5.5.13 **NOTIFY** HCU/CRD Coordinator that CRB is REMOVED.

5.5.14 IF CRB is to be stored in Fuel Pool, THEN **CONTINUE RAISING** CRB to Full Up position (jam block actuates whisker switch).

5.5.15 IF using jib arm, THEN **PERFORM** the following:

1. IF performing the first CRB exchange, THEN **PLACE** tape mark on hoist cable such that lower edge of tape is even with lower surface of jib arm.

NOTE: Tape mark on hoist cable should be used to assist with performance of following step.

2. **LOWER** hoist 2 inches +/- ¼ inch.

CAUTION

Do not operate hoist with cable positioned in jib arm.

While cable is hanging straight (jib arm un-cranked), there is inadequate clearance between CRB and refuel shield. When using jib arm, do not un-crank jib until CRB is over CRB rack area.

3. With jib arm positioned adjacent to hoist cable, **POSITION** hoist cable in jib arm cable guide AND **CLOSE** gate. **ENSURE** gate is fully closed AND seated in detent.

4. While monitoring CRB for any obstructions AND hoist load indication for potential cable binding, **TURN** jib arm crank to reposition hoist cable to area near front of operator cab.

WARNING

DO NOT use foot to restrain frame hoist cable in slot between cab and bridge. Failure to comply could lead to personal injury.

5.5.16 IF NOT using jib arm tool, THEN for clearance through cattle chute, **RESTRAIN** frame hoist cable manually OR with a lanyarded tool (i.e. metal cribbing, pole, etc.) in slot between cab and bridge.

5.5.17 **POSITION** CRB over CRB rack area.

5.5.18 IF using jib arm, THEN **PERFORM** the following:

1. While monitoring CRB for any obstructions, **TURN** jib arm crank to reposition hoist cable to normal vertical position.

2. **REMOVE** hoist cable from jib arm.

5.5.19 IF CRB is to be stored in Fuel Pool, THEN **LOWER** AND **RELEASE** CRB into designated rack location per CCTAS.

5.6 CRB Uncoupling and Removal Using CRB Latch Tool

5.6.1 **REQUEST** HCU/CRD Coordinator to verify control rod is fully withdrawn (position 48 or OVERTRAVEL) AND two cell separation criteria is met. IF CRB is fully withdrawn, THEN **NOTIFY** HCU/CRD Coordinator that CRB removal will commence.

5.6.2 **POSITION** CRB latch tool over core location per CCTAS.

5.6.3 **LOWER** CRB latch tool through top guide AND into CRB guide tube until tool is properly seated on CRB bail handle.

NOTE: Attachment 12 is intended to serve as an aid in the performance of this procedure when multiple FSP/CRBs are to be handled. It is recommended that a completed attachment 12 be posted on the refueling platform for reference.

5.6.4 IF performing first of multiple CRB exchanges, THEN **RAISE** empty grapple AND **RECORD** indicated weight on Attachment 12, THEN **RESEAT** grapple onto CRB.

5.6.5 **PULL DOWN** on AND **HOLD** air hoses to verify there is no tension in hoses.

5.6.6 **ACTUATE** ``ENGAGE'' push-button on hoist pendant control.

5.6.7 **VERIFY** CRB is captured by manually lifting CRB latch tool enough to take weight of CRB.

5.6.8 IF CRB is coupled, THEN **REQUEST** RO to apply continuous withdraw signal AND **VERIFY** CRD moves to OVERTRAVEL position.

CAUTION

Continuous communication with RO is required during Step 5.6.9 to prevent damage to CRD mechanism if CRB is not uncoupled.

NOTE: Attachment 12 may be available as reference for expected weight indication. Normal weight indication for grappled CRB is roughly 240 lbs.

5.6.9 IF rod position indication is NOT bypassed, THEN **REQUEST** RO to monitor Control Rod position indication during removal to confirm position indication remains OVERTRAVEL, AND IMMEDIATELY **INFORM** FHD IF indication changes.

CAUTION

IF rod position indication CHANGES during Step 5.6.10, THEN IMMEDIATELY **STOP** raising CRB
AND
Repeat Steps 5.6.3 through 5.6.10 to uncouple CRB.

5.6.10 SLOWLY **RAISE** CRB approximately 12 inches.

5.6.11 IF CRD exchange is being performed concurrently with this procedure, THEN **REQUEST** undervessel personnel to verify NO gross leakage is present from open CRD housing(s).

1. IF gross leakage is present, THEN IMMEDIATELY **LOWER** CRB until fully seated AND **NOTIFY** RO AND **SUSPEND** blade removal operations.

VESSEL DRAINAGE BARRIER, SEE LIMITATION 3.2.15

5.6.12 IF performing first of multiple CRB exchanges, THEN **RECORD** indicated weight on Attachment 12.

CAUTION

Operate valves in the following order to prevent possible personnel injury or equipment damage.

5.6.13 IF withdraw signal is being applied, THEN **REQUEST** personnel to isolate CRD as follows:

1. **CLOSE** "Insert Riser Isolation Valve".
   (LGS: 47-*-01, PBAPS: HV-*-3A-13101)

2. **CLOSE** "Withdraw Riser Isolation Valve".
   (LGS: 47-*-02, PBAPS: HV-*-3A-13102)

5.6.14 IF withdraw signal is being applied, THEN **NOTIFY** RO that CRD is isolated AND **REQUEST** RO to stop withdraw signal.

5.6.15 IF required, THEN **BYPASS** One Rod Out interlock as follows:

1. **OBTAIN** permission from HCU/CRD Coordinator to bypass One Rod Out interlock.

2. **DISCONNECT** PIP AND **INSTALL** position '00' dummy PIP plug on PIP cable.

3. **VERIFY** simulated control rod position with RO.

5.6.16 **RAISE** CRB through top guide AND above core.

5.6.17 Using underwater camera, **VERIFY** CRB latch tool is properly engaged to CRB bail handle. **CM-6**

5.6.18 **NOTIFY** HCU/CRD Coordinator that CRB has been removed.

5.6.19 IF CRB is to be stored in Fuel Pool, THEN **CONTINUE RAISING** CRB to Full-Up position (jam block actuates whisker switch).

5.6.20 IF using jib arm, THEN **PERFORM** the following:

1. IF performing the first CRB exchange, THEN **PLACE** tape mark on hoist cable such that lower edge of tape is even with lower surface of jib arm.

NOTE: Tape mark on hoist cable should be used to assist with performance of following step.

2. **LOWER** hoist 2 inches +/- ¼ inch.

> CAUTION
>
> Do not operate hoist with cable positioned in jib arm.
>
> While cable is hanging straight (jib arm un-cranked), there is inadequate clearance between CRB and refuel shield. When using jib arm, do not un-crank jib until CRB is over CRB rack area.

3. With jib arm positioned adjacent to hoist cable, **POSITION** hoist cable in jib arm cable guide AND **CLOSE** gate. **ENSURE** gate is fully closed AND seated in detent.

4. While monitoring CRB for any obstructions AND hoist load indication for potential cable binding, **TURN** jib arm crank to reposition hoist cable to area near front of operator cab.

> **WARNING**
>
> DO NOT use foot to restrain frame hoist cable in slot between cab and bridge. Failure to comply could lead to personal injury.

5.6.21 IF NOT using jib arm tool, THEN **RESTRAIN** frame hoist cable manually OR with a lanyarded tool (i.e. metal cribbing, pole, etc.) in slot between cab and bridge for clearance through cattle chute.

5.6.22 **POSITION** CRB over CRB rack area.

5.6.23 IF using jib arm, THEN **PERFORM** the following:

1. While monitoring CRB for any obstructions, **TURN** jib arm crank to reposition hoist cable to normal vertical position.

2. **REMOVE** hoist cable from jib arm.

5.6.24 IF CRB is to be stored in Fuel Pool, THEN **LOWER** AND **RELEASE** CRB into designated rack location per CCTAS.

5.7 CRB Guide Tube Seal Installation

NOTE: If guide tube seal is being installed as an emergency measure, rope may be used to lower and seat seal in CRB guide tube at the direction of the FHD.

5.7.1 **ATTACH** CRB grapple OR jet pump grapple as required to frame mounted OR monorail auxiliary hoist (reference Section 5.2 for guidance).

5.7.2 **CYCLE** grapple to verify proper operation.

5.7.3 **POSITION** grapple over bail handle of guide tube seal.

5.7.4 **ACTUATE** ``ENGAGE'' push-button on hoist pendant control.

5.7.5 **POSITION** guide tube seal over designated core location per CCTAS OR, in the event of an emergency, as directed by the FHD.

VESSEL DRAINAGE BARRIER, SEE LIMITATION 3.2.15

5.7.6 **LOWER** guide tube seal into guide tube until seal is properly seated.

5.7.7 **ACTUATE** ``RELEASE'' push-button on hoist pendant control.

5.7.8 **VERIFY** grapple is disengaged by manually lifting grapple.

5.7.9 **RAISE** grapple through top guide to Full Up position.

5.8 CRB Guide Tube Seal Removal

5.8.1 **ATTACH** CRB grapple OR jet pump grapple, as required, to frame mounted OR monorail auxiliary hoist (reference Section 5.2 for guidance).

5.8.2 **CYCLE** grapple to verify proper operation.

5.8.3 **POSITION** grapple over designated core location per CCTAS.

5.8.4 **ACTUATE** ``RELEASE'' push-button on hoist pendant control.

5.8.5 **LOWER** grapple over bail handle of guide tube seal.

5.8.6 **ACTUATE** ``ENGAGE'' push-button on hoist pendant control.

5.8.7 **VERIFY** grapple is engaged by manually lifting grapple enough to feel resistance provided by guide tube seal.

5.8.8 **RAISE** hoist SLOWLY to take strain on hoist cable AND permit valve at top of guide tube seal to open as indicated by air bubbles.

5.8.9 When bubbles have dispersed OR after 2 minutes, SLOWLY **RAISE** hoist to raise guide tube seal.

5.8.10 **RAISE** grapple through top guide to Full Up position AND **STORE** guide tube seal as required.

5.9 CRB Installation Using CRB Latch Tool

NOTE: At Limerick only, when mounting CRB handling tool onto auxiliary hoist, IF hoist jam button is moved, THEN it shall be reset by performance of applicable section of ST-6-107-633-* OR ST-6-097-630-*. **CM-4**

5.9.1 IF CRB is hanging from auxiliary hoist, THEN **PROCEED** to Step 5.9.10.

5.9.2 **CYCLE** grapple to verify proper operation.

5.9.3 **POSITION** CRB latch tool over designated storage location per CCTAS.

5.9.4 **ACTUATE** ``RELEASE'' push-button on hoist pendant control.

5.9.5 IF intent of maintenance is to replace old CRB with a new one, THEN **VERIFY** CRB located in rack specified on CCTAS appears new. **CM-9**

5.9.6 **LOWER** CRB latch tool over bail handle of CRB.

5.9.7 Using underwater camera, **VERIFY** CRB latch tool is properly engaged to CRB bail handle. **CM-6**

5.9.8 **ACTUATE** ``ENGAGE'' push-button on hoist pendant control.

NOTE: Attachment 12 may be available as reference for expected weight indication. Normal weight indication for grappled CRB is roughly 240 lbs.

5.9.9 **VERIFY** CRB latch tool is engaged by manually lifting tool enough to take weight of CRB.

5.9.10 **RAISE** CRB to Full Up position (jam block actuates whisker switch).

5.9.11 IF using jib arm, THEN **PERFORM** the following:

1. IF performing the first CRB exchange, THEN **PLACE** tape mark on hoist cable such that lower edge of tape is even with lower surface of jib arm.

NOTE: Tape mark on hoist cable should be used to assist with performance of following step.

2. **LOWER** hoist 2 inches +/- ¼ inch.

> CAUTION
>
> Do not operate hoist with cable positioned in jib arm.
>
> While cable is hanging straight (jib arm un-cranked), there is inadequate clearance between CRB and refuel shield. When using jib arm, do not un-crank jib until CRB is over CRB rack area.

3. With jib arm positioned adjacent to hoist cable, **POSITION** hoist cable in jib arm cable guide AND **CLOSE** gate. **ENSURE** gate is fully closed AND seated in detent.

4. While monitoring CRB for any obstructions AND hoist load indication for potential cable binding, **TURN** jib arm crank to reposition hoist cable to area near front of operator cab.

> **WARNING**
>
> DO NOT use foot to restrain frame hoist cable in slot between cab and bridge. Failure to comply could lead to personal injury.

5.9.12 IF NOT using jib arm tool, THEN for clearance through cattle chute, **RESTRAIN** frame hoist cable manually OR with a lanyarded tool (i.e. metal cribbing, pole, etc.) in slot between cab and bridge.

5.9.13 **POSITION** CRB over designated core location per CCTAS.

5.9.14 IF using jib arm, THEN **PERFORM** the following:

1. While monitoring CRB for any obstructions, **TURN** jib arm crank to reposition hoist cable to normal vertical position.

2. **REMOVE** hoist cable from jib arm.

5.9.15 Fully **LOWER** CRB into guide tube AND **ALIGN** CRB with adjacent cells.

5.9.16 **ACTUATE** ``RELEASE'' push-button on hoist pendant control.

5.9.17 **VERIFY** CRB latch tool is disengaged by manually lifting tool.

5.9.18 **RAISE** CRB latch tool through top guide AND above core.

5.10 CRB Installation Using CRB Grapple

NOTE: At Limerick only, when mounting CRB handling tool onto monorail or frame mounted auxiliary hoist, IF hoist jam button is moved, THEN it shall be reset by performance of applicable section of ST-6-107-633-* OR ST-6-097-630-*. **CM-4**

5.10.1 IF CRB is hanging from auxiliary hoist, THEN **PROCEED** to Step 5.10.12. Otherwise, **PROCEED** to next step.

5.10.2 **CYCLE** grapple to **VERIFY** proper operation.

5.10.3 **POSITION** CRB grapple over designated storage location per CCTAS.

5.10.4 **ACTUATE** ``RELEASE'' push-button on hoist pendant control.

5.10.5 IF intent of maintenance is to replace old CRB with a new one, THEN **VERIFY** CRB located in rack specified on CCTAS appears new. **CM-9**

NOTE: Peach Bottom CRB bail handles are single handles (not cruciform). PBAPS CRB Grapple must be properly oriented to engage bail. Camera should be used as necessary to check bail handle and grapple orientation.

5.10.6 **LOWER** CRB grapple over bail handle of CRB.

5.10.7 **ACTUATE** ``ENGAGE'' push-button on hoist pendant control.

NOTE: Attachment 12 may be available as reference for expected weight indication. Normal weight indication for grappled CRB is roughly 240 lbs.

5.10.8 **VERIFY** CRB grapple is engaged by manually lifting tool enough to take weight of CRB.

5.10.9 **RAISE** CRB to Full Up position (jam block actuates whisker switch).

5.10.10 IF using jib arm, THEN **PERFORM** the following:

1. IF performing the first CRB exchange, THEN **PLACE** tape mark on hoist cable such that lower edge of tape is even with lower surface of jib arm.

NOTE: Tape mark on hoist cable should be used to assist with performance of following step.

2. **LOWER** hoist 2 inches +/- ¼ inch.

> CAUTION
>
> Do not operate hoist with cable positioned in jib arm.
>
> While cable is hanging straight (jib arm un-cranked), there is inadequate clearance between CRB and refuel shield. When using jib arm, do not un-crank jib until CRB is over CRB rack area.

3. With jib arm positioned adjacent to hoist cable, **POSITION** hoist cable in jib arm cable guide AND **CLOSE** gate. **ENSURE** gate is fully closed AND seated in detent.

4. While monitoring CRB for any obstructions AND hoist load indication for potential cable binding, **TURN** jib arm crank to reposition hoist cable to area near front of operator cab.

> **WARNING**
>
> DO NOT use foot to restrain frame hoist cable in slot between cab and bridge. Failure to comply could lead to personal injury.

5.10.11 IF NOT using jib arm tool, THEN for clearance through cattle chute, **RESTRAIN** frame hoist cable manually OR with a lanyarded tool (i.e. metal cribbing, pole, etc.) in slot between cab and bridge.

5.10.12 **POSITION** CRB over designated core location per CCTAS.

5.10.13 IF using jib arm, THEN **PERFORM** the following:

1. While monitoring CRB for any obstructions, **TURN** jib arm crank to reposition hoist cable to normal vertical position.

2. **REMOVE** hoist cable from jib arm.

5.10.14 Fully **LOWER** CRB into guide tube AND **ALIGN** CRB with adjacent cells.

5.10.15 **ACTUATE** ``RELEASE'' push-button on hoist pendant control.

5.10.16 **VERIFY** CRB grapple is disengaged by manually lifting tool.

5.10.17 **RAISE** CRB grapple through top guide AND above core.

5.11 FSP Installation Using FSP Grapple

NOTE: Anti-Rotation Pins are oriented with control cell as follows:

Limerick - NORTHWEST
Peach Bottom - SOUTHWEST

5.11.1 IF FSP is hanging from auxiliary hoist, THEN **PROCEED** to Step 5.11.9. Otherwise, **PROCEED** to next step.

5.11.2 **CYCLE** grapple to verify proper operation.

5.11.3 **POSITION** FSP grapple over designated storage location per CCTAS.

5.11.4 **ACTUATE** ``RELEASE'' push-button on hoist pendant control.

5.11.5 **LOWER** FSP grapple fully onto FSP AND **PULL DOWN** AND **HOLD** air hose to ensure no tension in hose.

5.11.6 **ACTUATE** ``ENGAGE'' push-button on hoist pendant control AND **WAIT** approximately 10 seconds for air cylinder stroke.

NOTE: Attachment 12 may be available as reference for expected weight indication. Normal weight indication for grappled FSP is roughly 160 lbs.

5.11.7 **VERIFY** FSP grapple is engaged by manually lifting tool enough to take weight of FSP.

5.11.8 **RAISE** FSP to Full Up position.

5.11.9 **POSITION** FSP over designated core location per CCTAS.

5.11.10 **LOWER** FSP through top guide onto CRB guide tube with FSP oriented to properly align with anti-rotation pin at corner of control cell.

5.11.11 **PULL DOWN** AND **HOLD** air hose to ensure no tension in hose.

5.11.12 **ACTUATE** ``RELEASE'' push-button on hoist pendant control.

5.11.13 **VERIFY** FSP grapple is disengaged by manually lifting tool.

5.11.14 **RAISE** FSP grapple away from FSP approximately 12 inches.

5.11.15 At PBAPS only, **DEPRESS** ``ENGAGE'' push-button on hoist pendant control.

5.11.16 **RAISE** FSP grapple through top guide to Full Up position.

5.11.17 FHD AND RPO **VERIFY**, with underwater camera, FSP is correctly seated in accordance with the following:

1. Using top view camera angle, **VERIFY** anti-rotation pin is captured by FSP fingers.

2. **VERIFY** FSP is fully seated onto CRB guide tube. **CM-2**

5.11.18 **NOTIFY** HCU/CRD coordinator that CRB is fully seated in CRB guide tube.

VESSEL DRAINAGE BARRIER, SEE LIMITATION 3.2.15

5.12 Blade Guide Installation

5.12.1 IF blade guide is hanging from main hoist, THEN **PROCEED** to Step 5.12.4. Otherwise, **PROCEED** to next step.

5.12.2 **POSITION** Refueling Platform main hoist over Fuel Pool location per CCTAS.

5.12.3 Using applicable refuel platform system operating procedure, **REMOVE** blade guide from storage rack.

5.12.4 **POSITION** Refueling Platform main hoist over core location per CCTAS.

5.12.5 Using applicable refuel platform system operation procedure, **INSTALL** blade guide fully into core per CCTAS.

5.12.6 **RAISE** main hoist to NORMAL UP.

CAUTION

Double blade guides have the potential to become twisted and seat in incorrect core locations. Twisted guides can appear to be correctly inserted when viewed from above.

Camera verification shall be performed along the full length of the blade guide to ensure it is not twisted.
CM-1, CM-3

5.12.7 FHD AND RPO **VERIFY**, with underwater camera, blade guide is correctly seated in accordance with the following:

1. Guide is seated on FSP in correct core locations.

2. Guide is not twisted, and is plumb vertically along its entire length.

5.12.8 **NOTIFY** HCU/CRD Coordinator that blade guide installation is complete.

5.13 Rod Insertion and Restoration of One-Rod-Out Interlock

5.13.1 **OBTAIN** location of CRB to be restored from HCU/CRD Coordinator.

5.13.2 **RESTORE** One Rod Out interlock as follows:

1. **OBTAIN** permission from HCU/CRD Coordinator to remove by-pass.

2. **REMOVE** dummy PIP plug AND **RECONNECT** PIP cable per CCTAS as applicable.

3. **CONTACT** Control Room AND **CONFIRM** "FULL IN" green light on rod display panel has changed to indication consistent with rod in overtravel position.

INADVERTENT CRITICALITY BARRIER, SEE LIMITATION 3.2.15

5.13.3 **REQUEST** permission from HCU/CRD coordinator to open valves:

1. "Withdraw Riser Isolation Valve"
(LGS: 47-*-02, PBAPS: HV-*-3A-13102)

2. "Insert Riser Isolation Valve"
(LGS: 47-*-01, PBAPS: HV-*-3A-13101)

WARNING

Operate the valves in the following order to prevent possible injury or equipment damage.

5.13.4 **NOTIFY** personnel to unisolate HCU as follows:

1. **OPEN** "Withdraw Riser Isolation Valve" (LGS: 47-*-02, PBAPS: HV-*-3A-13102)

2. **OPEN** "Insert Riser Isolation Valve" (LGS: 47-*-01, PBAPS: HV-*-3A-13101)

5.13.5 **NOTIFY** HCU/CRD Coordinator that control rod is ready to be recoupled AND that a coupling check may be performed.

5.13.6 IF CRB will not couple, THEN **PERFORM** the following:

1. **REQUEST** RO to fully insert CRB.

2. Using underwater camera and "L"-hook, **ACTUATE** coupling handle on CRB.

3. **REQUEST** RO to re-attempt coupling check.

4. **REPEAT** this step as required to couple CRB.

5.14 Guide Tube Removal

NOTES:

1. Guide tubes are normally stored in cells of fuel pool CRB racks.

2. Anti-Rotation Pins are oriented with control cell as follows:

   Limerick - NORTHWEST

   Peach Bottom - SOUTHWEST

5.14.1 **CYCLE** grapple to verify proper operation AND **LEAVE** grapple in position.

5.14.2 **POSITION** grapple over designated core location per CCTAS.

5.14.3 **LOWER** grapple to just above core top guide.

5.14.4 **ORIENT** grapple such that its tabs are NOT aligned with core plate anti-rotation pin in corner of cell.

5.14.5 **LOWER** grapple through core top guide AND onto guide tube.

5.14.6 Visually **CHECK** with use of camera that grapple is properly seated on guide tube.

5.14.7 **PULL DOWN** AND **HOLD** air hose to ensure no tension in hose.

5.14.8 **ENGAGE** grapple while visually verifying with use of camera that grapple linkages stroked normal amount.

NOTE: Normal weight indication for grappled guide tube is approximately 280 lbs.

5.14.9 Using safety kink, manually **LIFT** grapple AND guide tube to verify engagement.

> **CAUTION**
>
> If grid guide is not used, use caution when passing grapple through core top guide.

5.14.10 IF guide tube will be immediately installed in a new core location, THEN **RAISE** only high enough to clear core top guide AND **PROCEED** to step 5.15.9.

5.14.11 **RAISE** guide tube to Full Up position (whisker switch actuates jam block).

5.14.12 IF using jib arm, THEN **PERFORM** the following:

1. IF performing the first Guide Tube exchange, THEN **PLACE** tape mark on hoist cable such that lower edge of tape is even with lower surface of jib arm.

NOTE: Tape mark on hoist cable should be used to assist with performance of following step.

2. **LOWER** hoist 2 inches +/- ¼ inch.

> CAUTION
>
> Do not operate hoist with cable positioned in jib arm.
>
> While cable is hanging straight (jib arm un-cranked), there is inadequate clearance between CRB and refuel shield. When using jib arm, do not un-crank jib until CRB is over CRB rack area.

3. With jib arm positioned adjacent to hoist cable, **POSITION** hoist cable in jib arm cable guide AND **CLOSE** gate. **ENSURE** gate is fully closed AND seated in detent.

4. While monitoring CRB for any obstructions AND hoist load indication for potential cable binding, **TURN** jib arm crank to reposition hoist cable to area near front of operator cab.

> **WARNING**
>
> DO NOT use foot to restrain frame hoist cable in slot between cab and bridge. Failure to comply could lead to personal injury.

5.14.13 IF NOT using jib arm tool, THEN for clearance through cattle chute, **RESTRAIN** frame hoist cable manually OR with a lanyarded tool (i.e. metal cribbing, pole, etc.) in slot between cab and bridge.

5.14.14 **TRANSPORT** guide tube to its designated storage location per CCTAS.

5.14.15 IF using jib arm, THEN **PERFORM** the following:

1. While monitoring CRB for any obstructions, **TURN** jib arm crank to reposition hoist cable to normal vertical position.

2. **REMOVE** hoist cable from jib arm.

5.14.16 IF required, THEN **LOWER** guide tube into its storage location AND **RELEASE** grapple from guide tube.

5.14.17 Using safety kink, manually **LIFT** grapple to verify disengagement.

5.14.18 **RAISE** grapple to Full Up position.

5.14.19 **REPEAT** this section as required for remaining guide tubes to be removed per CCTAS.

5.15 Guide Tube Installation

NOTE: Anti-Rotation Pins are oriented with control cell as follows:

Limerick - NORTHWEST
Peach Bottom - SOUTHWEST

5.15.1 **POSITION** grapple over guide tube in its designated storage location per CCTAS, such that grapple tabs are not aligned with guide tube slotted tab.

5.15.2 **LOWER** grapple onto guide tube.

5.15.3 Visually **CHECK** with camera that grapple is properly seated on guide tube.

5.15.4 **ENGAGE** grapple while visually verifying with camera that grapple linkages stroked normal amount.

5.15.5 Using safety kink, manually **LIFT** grapple AND guide tube to verify engagement.

5.15.6 **RAISE** guide tube from storage location to Full Up (jam block actuates the whisker switch).

5.15.7 IF using jib arm, THEN **PERFORM** the following:

1. IF performing the first CRB exchange, THEN **PLACE** tape mark on hoist cable such that lower edge of tape is even with lower surface of jib arm.

NOTE: Tape mark on hoist cable should be used to assist with performance of following step.

2. **LOWER** hoist 2 inches +/- ¼ inch.

> CAUTION
>
> Do not operate hoist with cable positioned in jib arm.
>
> While cable is hanging straight (jib arm un-cranked), there is inadequate clearance between CRB and refuel shield. When using jib arm, do not un-crank jib until CRB is over CRB rack area.

3. With jib arm positioned adjacent to hoist cable, **POSITION** hoist cable in jib arm cable guide AND **CLOSE** gate. **ENSURE** gate is fully closed AND seated in detent.

4. While monitoring Guide Tube for any obstructions AND hoist load indication for potential cable binding, **TURN** jib arm crank to reposition hoist cable to area near front of operator cab.

> **WARNING**
>
> DO NOT use foot to restrain frame hoist cable in slot between cab and bridge. Failure to comply could lead to personal injury.

5.15.8 IF NOT using jib arm tool, THEN for clearance through cattle chute, **RESTRAIN** Frame hoist cable manually OR with a lanyarded tool (i.e. metal cribbing, pole, etc.) in slot between cab and bridge.

5.15.9 **POSITION** Guide Tube over designated core location per CCTAS.

5.15.10 IF using jib arm, THEN **PERFORM** the following:

1. While monitoring CRB for any obstructions, **TURN** jib arm crank to reposition hoist cable to normal vertical position.

2. **REMOVE** hoist cable from jib arm.

5.15.11 **LOWER** guide tube to just above core top guide.

5.15.12 **ORIENT** guide tube such that its slotted tab properly aligns with core plate anti-rotation pin in corner of cell.

5.15.13 **LOWER** guide tube through core top guide AND onto core plate.

5.15.14 **PULL DOWN** AND **HOLD** air hose to ensure no tension in hose.

5.15.15 **ENSURE** guide tube is properly seated on core plate AND **RELEASE** grapple from guide tube.

5.15.16 Using safety kink, manually **LIFT** grapple to verify disengagement.

5.15.17 **RAISE** grapple from core to Full Up position.

5.15.18 **REPEAT** this section as required for remaining guide tubes to be installed per CCTAS.

5.16 CRB Replacement Using GE Combined Grapple

5.16.1 **REQUEST** HCU/CRD Coordinator to verify CRB is UNCOUPLED AND two cell separation criteria is met (ref. 7.2.2, 7.2.12).

5.16.2 **LOWER** grapple above top guide cell AND **ORIENT** air hose connections so they face anti-rotation pin.

5.16.3 Per CCTAS, **LOWER** grapple through top guide until seated AND cable is slack.

NOTE: Attachment 12 is intended to serve as an aid in the performance of this procedure when multiple CRBs are to be handled. It is recommended that a completed attachment 12 be posted on the refueling platform for reference.

5.16.4 IF performing first of multiple CRB exchanges, THEN **RAISE** empty grapple AND **RECORD** indicated weight on Attachment 12, THEN **RESEAT** grapple onto FSP and CRB.

5.16.5 **PULL DOWN** on AND **HOLD** air hoses to verify there is no tension in hoses.

5.16.6 **POSITION** camera as horizontal as possible in available open cells AND **VERIFY** as conditions permit:

1. Control Rod Slider has lowered onto CRB.

2. Gap between grapple and FSP appears even AND not greater than 1/8 inch.

3. Gravity latches released

4. Interlock pin is on anti-rotation pin AND actuating roller is on vertical face of pin block.

5. Dowel pins of plunger hook assemblies bottomed out in slots of outer cylinders

5.16.7 IF required, THEN **MANEUVER** OR **RESEAT** grapple AND **RE-PERFORM** previous step.

5.16.8 **DEPRESS** ``ENGAGE'' push-button AND VISUALLY **VERIFY** as conditions permit:

1. Control Rod hook has repositioned to engage bail handle.

2. Plungers have extended AND are fully seated on FSP flow outlet hole(s).

3. Gap between grapple and FSP appears not greater than 1/4 inch.

5.16.9 IF required, THEN **DEPRESS** ``RELEASE'' push-button, **REPOSITION** grapple, AND **RE-PERFORM** Step 5.16.8.

NOTE: Attachment 12 may be available as reference for expected weight indication. Normal weight indication of grappled and uncoupled CRB is roughly 240 lbs.

5.16.10 While monitoring weight indication, SLOWLY **RAISE** grapple until CRB is lifted approximately 6 inches.

5.16.11 IF CRD exchange is being performed concurrently with this procedure, THEN **REQUEST** undervessel personnel to verify NO gross leakage is present from open CRD housing(s).

1. IF gross leakage is present, THEN IMMEDIATELY **LOWER** CRB until fully seated AND **NOTIFY** RO AND **SUSPEND** blade removal operations.

VESSEL DRAINAGE BARRIER, SEE LIMITATION 3.2.15

5.16.12 IF performing first of multiple CRB Exchanges, THEN **RECORD** indicated weight for CRB lift on Attachment 12.

NOTE: Normal weight indication for grappled CRB + FSP is roughly 425 lbs.

> **CAUTION**
>
> IF FSP is stuck, THEN hoist load will increase rapidly as hoist is raised. When attempting to lift CRB AND FSP do not allow hoist load to exceed 485 lb. When attempting to lift FSP only, do not allow load to exceed 285 lb.

5.16.13 **CONTINUE TO RAISE** hoist AND **VERIFY** engagement of FSP by observing weight increase to roughly 425 lbs (not to exceed 485 lb). IF weight indication significantly exceeds 425 lbs indicating FSP is stuck, THEN **PERFORM** the following sub-steps. OTHERWISE, **CONTINUE** with Step 5.16.14.

1. **LOWER** hoist to re-seat CRB, **VERIFY** no tension in air line, THEN **DEPRESS** ``RELEASE'' push-button.

2. **BUMP** hoist UP OR **PERFORM** safety bend to raise sliding hook assembly approximately 12 inches so that safety hook clears CRB bail handle.

3. **DEPRESS** ``ENGAGE'' push-button to grapple only FSP.

4. WHILE ensuring indicated weight does not exceed 285 lb., **ATTEMPT TO FREE** FSP by raising hoist AND, IF necessary, agitating hoist cable manually.

5. IF FSP becomes free, THEN **RESEAT** FSP, **VERIFY** no tension in air line, **DEPRESS** ``RELEASE'' button, THEN **GO** to Step 5.16.5.

6. IF FSP remains stuck, THEN **RESEAT** FSP, **DEPRESS** ``RELEASE'' button, **RAISE** grapple out of cell, AND **NOTIFY** Maintenance Supervisor AND Shift Supervision.

5.16.14 IF performing first of multiple CRB Exchanges, THEN **RECORD** indicated weight for CRB + FSP lift on Attachment 12.

5.16.15 **CONTINUE RAISING** grapple until FSP is just above guide tube, THEN VISUALLY **VERIFY** as conditions permit:

1. Gravity latch(es) extended over plunger(s) (engaged).

2. Interlock pin is extended (released)

3. Gap between FSP and grapple appears even AND no greater than 1/4 inch.

CAUTION

Use safety bend when raising grapple and FSP and velocity limiter through top guide.

5.16.16 **RAISE** grapple, using a safety kink through top guide.

5.16.17 **NOTIFY** HCU/CRD Coordinator that CRB is REMOVED.

5.16.18 IF not previously verified, THEN VISUALLY **VERIFY** the following:

1. Interlock pin is in ▒ RELEASE▒ position
2. Gap between FSP and grapple appears even AND no greater than 1/4 inch.
3. Both plungers are contacting FSP flow hole AND at least 1 gravity latch is engaged.

5.16.19 **RAISE** grapple to Full Up position (jam block actuates whisker switch).

5.16.20 IF using jib arm tool, THEN **PERFORM** the following:

1. IF performing the first CRB exchange, THEN using standard 2 inch wide tape, **PLACE** a tape mark on hoist cable such that lower edge of tape is even with lower surface of jib arm.

NOTE: Tape mark on hoist cable should be used to assist with performance of following step.

2. **LOWER** hoist 2 inches +/-1/4▒ .

CAUTION

Do not operate hoist with cable positioned in jib arm.

While cable is hanging straight (jib arm un-cranked), there is inadequate clearance between CRB and refuel shield. When using jib arm, do not un-crank jib until CRB is over CRB rack area.

3. With jib arm positioned adjacent to hoist cable, **POSITION** hoist cable in jib arm cable guide AND **CLOSE** gate. **ENSURE** gate is fully closed AND seated in detent.

4. While monitoring CRB for any obstructions AND hoist load indication for potential cable binding, **TURN** jib arm crank to reposition hoist cable to area near front of operator cab.

5.16.21 **POSITION** CRB over CRB rack area.

5.16.22 IF using jib arm tool, THEN **PERFORM** the following:

1. While monitoring CRB for any obstructions, **TURN** jib arm crank to reposition hoist cable to normal vertical position.

2. **REMOVE** hoist cable from jib arm.

NOTES: Rotational orientation of CRB in CRB rack is important to avoid interference when using a Combined Grapple. The recommended orientation is as follows:

- Peach Bottom: CRB blade fins to be oriented NE, NW, SE & SW (i.e. rotated 45 degrees with respect to fuel floor).
- LGS: CRB blade fins to be oriented due N,E,S & W.

5.16.23 **ORIENT** CRB as required, THEN per CCTAS **LOWER** CRB in storage position until weight of CRB is removed from grapple hook.

5.16.24 Visually **VERIFY** interlock pin is not depressed, THEN **DEPRESS** ``RELEASE'' push-button AND **VERIFY** FSP remains engaged.

5.16.25 **RAISE** grapple and FSP off CRB.

5.16.26 **DEPRESS** ``ENGAGE'' push-button.

5.16.27 Per CCTAS, **ALIGN** FSP and grapple over CRB to be installed.

5.16.28 IF intent of maintenance is to replace old CRB with a new one, THEN **VERIFY** CRB located in rack specified on CCTAS appears new. **CM-9**

CAUTION

To minimize stress induced in new control rod blade, grapple shall not be landed rapidly on new CRB. IF safety bends are required, THEN perform them gently and with care.

5.16.29 **DEPRESS** ``RELEASE'' push-button, THEN **LOWER** FSP and grapple over control rod until slider is seated on bail handle.

5.16.30 **DEPRESS** ``ENGAGE'' push-button, THEN **USE** a safety kink AND visual inspection to verify CRB is engaged.

5.16.31 **RAISE** grapple, CRB and FSP from storage location to Full Up position.

5.16.32 IF using jib arm tool, THEN **PERFORM** the following:

1. **LOWER** hoist 2 inches +/-1/4 .

> **CAUTION**
>
> Do not operate hoist with cable positioned in jib arm.
>
> While cable hanging straight (jib arm un-cranked), there is inadequate clearance between CRB and refuel shield. When using jib arm, do not un-crank jib until CRB is over reactor vessel.

2. **POSITION** hoist cable in jib arm cable guide AND **CLOSE** gate. **ENSURE** gate is fully closed AND seated in detent.

3. While monitoring CRB for any obstructions AND hoist load indication for potential cable binding, **TURN** jib arm crank to reposition hoist cable to area near front of operator cab.

5.16.33 **TRANSPORT** CRB and FSP over control cell per CCTAS.

5.16.34 IF using jib arm tool, THEN **PERFORM** the following:

1. While monitoring CRB for any obstructions, **TURN** jib arm crank to reposition hoist cable to normal vertical position.

2. **REMOVE** hoist cable from jib arm.

5.16.35 **ORIENT** air hose connections toward anti-rotation pin.

> **CAUTION**
>
> Use a safety kink when lowering through top guide AND when velocity limiter enters guide tube. Velocity limiter enters guide tube immediately after grapple enters top guide.

5.16.36 **LOWER** CRB and FSP into guide tube.

5.16.37 **LOWER** hoist until cable is slack AND **HOLD DOWN** air hoses to ensure no tension.

5.16.38 **DEPRESS** ``RELEASE'' push-button.

NOTE: Attachment 12 may be available as reference for expected weight indication. Weight of ONLY grapple and guide is roughly 150 lbs.

5.16.39 While monitoring weight indication, **RAISE** grapple out of core.

5.16.40 FHD AND RPO **VERIFY**:

1. Using top view camera angle, **VERIFY** anti-rotation pin is captured by FSP fingers.

2. **VERIFY** FSP is fully seated onto CRB guide tube. **CM-2**

5.16.41 **NOTIFY** HCU/CRD coordinator that CRB is fully seated in CRB guide tube.

VESSEL DRAINAGE BARRIER, SEE LIMITATION 3.2.15

5.17 Control Rod Guide Tube Vacuuming

5.17.1 **TRANSPORT** Tri-Nuke 260 vacuum to area adjacent to reactor vessel, as required.

NOTE: Attachment 10 contains guidance for Guide Tube Vacuum Pole set-up. Procedure M-C-797-003, ▒ Underwater Vacuum Cleaner Examination, Maintenance and Operation'' contains information regarding motor phasing should equipment operation difficulty be encountered.

5.17.2 **ASSEMBLE** lightweight handling poles along with optional guide tube vac head and optional pole with stud bracket. **SECURE** hose to pole in a few locations between end of pole up to special pole.

5.17.3 **ATTACH** one nylon hose guide rope and/or hose floatation devices as required.

5.17.4 **PERFORM** pre-cleaning video inspection of Guide tube. IF any large/solid debris is present, THEN **RECORD** on video tape.

5.17.5 IF large/solid debris is present in Guide Tube, THEN **REMOVE** debris using method(s) approved by FHD or Maintenance Supervisor. **ENSURE** all debris removed is stored in accordance with A-C-132 OR it has been discarded appropriately.

CAUTION

The vessel annulus area poses an entanglement hazard to the hose and guide rope.

5.17.6 Carefully **LOWER** vacuum head/hose to seat inside Guide Tube.

CAUTION

When performing Guide Tube vacuuming without special vac head, then a risk of disturbing the CRD uncoupling rod exists. Use care to not disturb the CRD uncoupling rod.

5.17.7 While monitoring uncoupling rod position visually (required when not using vac head), **OPERATE** vacuum for approximately 2 minutes while slightly lifting AND rotating vacuum head/hose.

NOTE: The next step will assure that debris which may still be present in the hose will either be drawn into the vacuum prior to turning it off OR that debris will settle back into guide tube. Turning vacuum OFF with hose above fuel OR core plate increases risk of foreign material loss.

5.17.8 IF using vac head, THEN while vacuum remains ON, **RAISE** vacuum head/hose about 3 feet AND **OPERATE** vacuum for about 1 minute, THEN **TURN OFF** vacuum AND **WAIT** about 30 seconds before continuing.

5.17.9 IF using vac hose without head, THEN **TURN OFF** vacuum (without raising first) and **WAIT** about 30 seconds before continuing.

5.17.10 Slowly **REMOVE** vacuum head/hose from cell.

5.17.11 **PERFORM** post-cleaning inspection of Guide Tube as required.

5.17.12 **REPEAT** above steps as required to clean guide tube.

5.17.13 IF additional guide tubes are to be vacuumed, THEN **STORE** handling pole and hose away from refuel platform travel path.

5.18 CRB and FSP Replacement Using NES Combined Grapple

NOTES: Reference Attachment 11 for illustration of Combined Grapple components.

This section may be used in conjunction with subsection 5.20 as required to perform blade swaps as directed by the CCTAS.

Steps 5.18.1 and 5.18.2 are contingency steps only.

> **CAUTION**
>
> IF grapple is UNLOADED with pendant ``RELEASE'' pushbutton depressed, FSP interlock will ENGAGE under the following conditions:
>
> 1. STOP pushbutton is depressed.
> 2. Power supply to bridge is interrupted.
> 3. FAULT LOCKOUT occurs.

5.18.1 IF FSP interlock is inadvertently engaged while grapple is UNLOADED, THEN **PERFORM** the following:

1. **ENSURE** pendant ``ENGAGE'' push-button is depressed.
2. **PULL UP** AND **HOLD** FSP grapple interlock manual override release rod AND **DEPRESS** pendant ``RELEASE'' push-button.
3. **ENSURE** that red FSP Gripper flag is HALF RED circle.
4. **RELEASE** grapple interlock manual override rod.

5.18.2 IF NES combined grapple malfunctions AND components must be released, THEN **PERFORM** the following:

1. With CRB OR FSP resting onto appropriate supporting rack or surface, **SHUT OFF** supply air AND **VENT/DEPRESSURIZE** air line to grapple.
2. To release a CRB, **PULL UP** on CRB grapple manual override rod with J-hook to disengage CRB hook mechanism, THEN **RAISE** grapple off CRB.
3. To release a FSP, **PULL UP** AND **HOLD** FSP Interlock release rod AND **PULL UP** AND **HOLD** FSP gripper manual release cable AND **RAISE** hoist until grapple clears FSP. Once grapple clears FSP, THEN **RELEASE** interlock rod AND FSP gripper cable.

5.18.3 **REQUEST** HCU/CRD Coordinator to verify CRB is UNCOUPLED AND two cell separation criteria is met (ref. 7.2.2, 7.2.12).

5.18.4 **VERIFY** FSP Gripper AND Interlock flags are both HALF RED circles.

5.18.5 Per CCTAS, **POSITION** grapple over CRB/FSP to be moved.

5.18.6 **ROTATE** hoist cable to orient grapple with two red indicating arrows pointing toward corner of top guide opening as follows:

PBAPS - SOUTHWEST

LGS - NORTHWEST

5.18.7 Carefully **LOWER** grapple through top guide while checking load cell AND camera monitor for indication of hang-up.

5.18.8 **CONTINUE LOWERING** grapple until seated AND cable is slack.

NOTE: Attachment 12 is intended to serve as an aid in the performance of this procedure when multiple CRBs are to be handled. It is recommended that a completed attachment 12 be posted on the refueling platform for reference.

5.18.9 IF performing first of multiple CRB exchanges, THEN **RAISE** empty grapple AND **RECORD** indicated weight on Attachment 12, THEN **RESEAT** grapple onto FSP.

5.18.10 **PULL DOWN** on AND **HOLD** air hoses to verify there is no tension in hoses.

NOTE: Scale on grapple frame may be used as an additional reference point for checking proper seating of grapple.

CAUTION

IF grapple is not fully seated on FSP, THEN grapple grippers may not engage FSP properly (ref. 7.3.10).

5.18.11 **ENSURE** grapple is fully seated by performing the following checks:

1. IF any adjacent fuel cell is vacant, THEN VISUALLY **CHECK** grapple is fully seated on FSP.

2. **SAFETY BEND** cable AND **VERIFY** solid stop of grapple.

NOTE: Stroke of FSP air cylinder should cause grapple frame to raise 1/4''.

> **CAUTION**
>
> Do not manipulate hoist cable for at least 8 seconds following pendent operation. Premature manipulation of hoist cable could result in improper grappling of FSP.

5.18.12 **DEPRESS** ``ENGAGE'' push-button, AND VISUALLY **VERIFY** FSP gripper flag indicates FULL RED circle.

NOTE: Attachment 12 may be available as reference for expected weight indication. Normal weight indication for grappled FSP ONLY is roughly 260 lbs and normal weight indication for FSP + CRB is roughly 460 lbs.

5.18.13 **ENSURE** at least 8 seconds has elapsed since pendent operation, THEN while monitoring weight indication, **RAISE** grapple approximately 3 inches THEN **STOP**.

5.18.14 **VERIFY** FSP is grappled by checking the following:

1. Weight indication is consistent with a grappled FSP.
2. FSP gripper interlock flag indicates FULL RED circle.

> **CAUTION**
>
> Monitor hoist weight indication for a consistent load as blade is being raised to verify CRB is uncoupled from its associated drive.

5.18.15 IF performing first of multiple CRB exchanges, THEN **RECORD** indicated weight for FSP lift on Attachment 12.

5.18.16 **RAISE** hoist an additional 6 inches, THEN **VERIFY** the following:

1. Weight indication is consistent with a grappled FSP & CRB.
2. CRB flag is indicating FULL YELLOW circle.

5.18.17 IF CRD exchange is being performed concurrently with this procedure, THEN **REQUEST** undervessel personnel to verify NO gross leakage is present from open CRD housing(s).

1. IF gross leakage is present, THEN IMMEDIATELY **LOWER** CRB until fully seated AND **NOTIFY** RO AND **SUSPEND** blade removal operations.

VESSEL DRAINAGE BARRIER, SEE LIMITATION 3.2.15

5.18.18 IF performing first of multiple CRB exchanges, THEN **RECORD** indicated weight for FSP + CRB lift on Attachment 12.

> **CAUTION**
>
> Closely monitor components when raising grapple and FSP and velocity limiter through top guide.
>
> Top of grapple when Full Up will be above floor of Operator Cab. Closely monitor for obstructions as grapple approaches operator cab.

5.18.19 **RAISE** grapple to Full Up position (jam block actuates whisker switch).

5.18.20 **NOTIFY** HCU/CRD Coordinator that CRB is REMOVED.

5.18.21 IF using jib arm tool, THEN **PERFORM** the following:

1. IF performing the first CRB exchange, THEN **PLACE** tape mark on hoist cable such that lower edge of tape is even with lower surface of jib arm.

2. **LOWER** hoist 2 inches +/- ¼ inch.

> CAUTION
>
> Do not operate hoist with cable positioned in jib arm.
>
> While cable is hanging straight (jib arm un-cranked), there is inadequate clearance between CRB and refuel shield. When using jib arm, do not un-crank jib until CRB is over CRB rack area.

3. With jib arm positioned adjacent to hoist cable, **POSITION** hoist cable in jib arm cable guide AND **CLOSE** gate. **ENSURE** gate is fully closed AND seated in detent.

4. While monitoring CRB for any obstructions AND hoist load indication for potential cable binding, **TURN** jib arm crank to reposition hoist cable to area near front of operator cab.

5.18.22 **POSITION** CRB over CRB rack area.

5.18.23 IF using jib arm tool, THEN **PERFORM** the following:

1. While monitoring CRB for any obstructions, **TURN** jib arm crank to reposition hoist cable to normal vertical position.

2. **REMOVE** hoist cable from jib arm.

NOTES: Rotational orientation of CRB in CRB rack is important to avoid interference when using a Combined Grapple. The recommended orientation is as follows:

- Peach Bottom: CRB blade fins to be oriented NE, NW, SE & SW (i.e. rotated 45 degrees with respect to fuel floor).
- LGS: CRB blade fins to be oriented due N,E,S & W.

CAUTION

Hang-up of CRB at top edge of storage rack could result in a CRB drop up to 6 inches within grapple frame if hang-up should suddenly release.

5.18.24 **ORIENT** CRB as required, THEN per CCTAS, **LOWER** CRB in storage position just until weight of CRB is removed from grapple hook AND hook is not in contact with CRB bail as indicated by CRB flag indicating HALF YELLOW circle.

NOTE: IF CRB hook does not disengage, THEN grapple may have to be lowered slightly to enable hook tip to pass under CRB bail.

5.18.25 **VERIFY** FSP Interlock flag indicates a FULL RED circle, THEN **DEPRESS** pendant ``RELEASE'' push-button to disengage CRB hook from under CRB bail.

5.18.26 **RAISE** grapple and FSP off CRB.

5.18.27 **DEPRESS** ``ENGAGE'' push-button.

NOTE: Subsection 5.19 contains applicable steps to store a FSP OR to pickup an FSP from storage using the Combined grapple.

5.18.28 Per CCTAS, **ALIGN** FSP and grapple over CRB to be installed.

5.18.29 IF intent of maintenance is to replace old CRB with a new one, THEN **VERIFY** CRB located in rack specified on CCTAS appears new. **CM-9**

5.18.30 **LOWER** grapple/FSP over replacement CRB just UNTIL FSP engages replacement CRB THEN **STOP**.

5.18.31 **DEPRESS** ``RELEASE'' push-button.

> **CAUTION**
>
> To minimize stress induced in new control rod blade, grapple/FSP shall not be landed rapidly on new CRB. IF safety bends are required, THEN perform them gently and with care.

5.18.32 **LOWER** grapple/FSP over replacement CRB just UNTIL CRB grapple contacts CRB bail.

5.18.33 **DEPRESS** pendant ``ENGAGE'' push-button to engage CRB hook under CRB bail.

5.18.34 **RAISE** grapple until CRB hook is in contact with CRB bail as indicated by CRB flag FULL YELLOW circle indicator.

> **CAUTION**
>
> Top of grapple when Full Up will be above floor of Operator Cab. Closely monitor for obstructions as grapple approaches operator cab.

5.18.35 **RAISE** grapple, CRB and FSP from storage location to Full Up position (jam block actuates whisker switch).

5.18.36 IF using jib arm, THEN **PERFORM** the following:

1. **LOWER** hoist 2 inches +/-1/4 .

> **CAUTION**
>
> Do not operate hoist with cable positioned in jib arm.
>
> While cable is hanging straight (jib arm un-cranked), there is inadequate clearance between CRB and refuel shield. When using jib arm, do not un-crank jib until CRB is over reactor vessel.

2. **POSITION** hoist cable in jib arm cable guide AND **CLOSE** gate. **ENSURE** gate is fully closed AND seated in detent.

3. While monitoring CRB for any obstructions AND hoist load indication for potential cable binding, **TURN** jib arm to reposition hoist cable to area near front of operator cab.

5.18.37 **TRANSPORT** CRB AND FSP over control cell per CCTAS.

5.18.38 IF using jib arm tool, THEN **PERFORM** the following:

1. While monitoring CRB for any obstructions, **TURN** jib arm crank to reposition hoist cable to normal vertical position.

2. **REMOVE** hoist cable from jib arm.

5.18.39 **ROTATE** hoist cable to orient grapple with FSP alignment pin.

CAUTION
Hang-up of CRB at Top Guide or Guide Tube could result in a CRB drop of 6 inches within grapple frame should hang-up suddenly release. Closely monitor indicated load and components when lowering through top guide AND when velocity limiter enters guide tube.

5.18.40 **LOWER** CRB and FSP into guide tube while monitoring weight for indication of hang-up.

5.18.41 **LOWER** hoist until cable is slack.

NOTE: Scale on grapple frame may be used as an additional reference point for checking proper seating of grapple.

5.18.42 Visually **VERIFY** FSP is seated at Guide Tube. IF required, THEN **SAFETY BEND** cable to seat FSP fully.

5.18.43 **HOLD DOWN** air hoses to ensure no tension, THEN **DEPRESS** ``RELEASE'' push-button.

NOTE: Attachment 12 may be available as reference for expected weight indication. Weight of grapple ONLY is roughly 200 lbs.

5.18.44 While monitoring weight indication, **RAISE** grapple.

5.18.45 FHD AND RPO **VERIFY**:

1. Using top view camera angle, **VERIFY** anti-rotation pin is captured by FSP fingers.

2. **VERIFY** FSP is fully seated onto CRB guide tube. **CM-2**

5.18.46 **ENSURE** grapple is raised above core.

5.18.47 **NOTIFY** HCU/CRD Coordinator that CRB is fully seated in CRB guide tube.

VESSEL DRAINAGE BARRIER, SEE LIMITATION 3.2.15

5.19 FSP Only Removal and Installation Using NES Combined Grapple

NOTE: See Attachment 11 for illustration of Combined Grapple components.

Steps 5.19.1 and 5.19.2 are contingency steps only.

> **CAUTION**
>
> IF grapple is UNLOADED with pendant ``RELEASE'' pushbutton depressed, FSP interlock will ENGAGE under the following conditions:
>
> 1. STOP pushbutton is depressed.
> 2. Power supply to bridge is interrupted.
> 3. FAULT LOCKOUT occurs.

5.19.1 IF FSP interlock is inadvertently engaged while grapple is UNLOADED, THEN **PERFORM** the following:

1. **ENSURE** pendant ``ENGAGE'' push-button is depressed.
2. **PULL UP** AND **HOLD** FSP grapple interlock manual override release rod AND **DEPRESS** pendant ``RELEASE'' push-button.
3. **ENSURE** that red FSP Gripper flag is HALF RED circle.
4. **RELEASE** grapple interlock manual override rod.

5.19.2 IF NES combined grapple malfunctions AND component must be released, THEN **PERFORM** the following:

1. With FSP resting onto appropriate supporting rack or surface, **SHUT OFF** supply air AND **VENT/DEPRESSURIZE** air line to grapple.
2. To release a FSP, **PULL UP** AND **HOLD** FSP Interlock release rod AND **PULL UP** AND **HOLD** FSP gripper manual release cable AND **RAISE** hoist until grapple clears FSP. Once grapple clears FSP, THEN **RELEASE** interlock rod AND FSP gripper cable.

NOTES: The next step locks CRB hook so that CRB cannot be engaged.

5.19.3 **ENSURE** CRB grapple quick release pin is installed through CRB hook support frame AND hook.

5.19.4 IF FSP is being installed, THEN **PROCEED** to EITHER Step 5.19.27 OR 5.19.34 as appropriate. Otherwise, **PROCEED** to next step.

5.19.5 **VERIFY** FSP Gripper AND Interlock flags are both HALF RED circles.

5.19.6 Per CCTAS, **POSITION** grapple over FSP to be moved.

5.19.7 **ROTATE** hoist cable to orient grapple with two red indicating arrows pointing toward corner of top guide opening as follows:

PBAPS - SOUTHWEST

LGS - NORTHWEST

5.19.8 Carefully **LOWER** grapple through top guide while checking load cell AND camera monitor for indication of hang-up.

5.19.9 **CONTINUE LOWERING** grapple until seated AND cable is slack.

NOTE: Attachment 12 is intended to serve as an aid in the performance of this procedure when multiple FSPs are to be handled. It is recommended that a completed attachment 12 be posted on the refueling platform for reference.

5.19.10 IF performing first of multiple FSP exchanges, THEN **RAISE** empty grapple AND **RECORD** indicated weight on Attachment 12, THEN **RESEAT** grapple onto FSP.

5.19.11 **PULL DOWN** on AND **HOLD** air hoses to verify there is no tension in hoses.

CAUTION

IF grapple is not fully seated on FSP, THEN grapple grippers may not engage FSP properly (ref. 7.3.10).

5.19.12 **ENSURE** grapple is fully seated by performing the following checks:

1. IF any adjacent fuel cell is vacant, THEN VISUALLY **CHECK** grapple is seated on FSP.

2. **SAFETY BEND** cable AND **VERIFY** solid stop of grapple.

NOTE: Stroke of FSP air cylinder should cause grapple frame to raise 1/4''.

> **CAUTION**
>
> Do not manipulate hoist cable for at least 8 seconds following pendent operation. Premature manipulation of hoist cable could result in improper grappling of FSP.

5.19.13 **DEPRESS** ``ENGAGE'' push-button AND VISUALLY **VERIFY** FSP gripper flag indicates FULL RED circle.

NOTE: Attachment 12 may be available as reference for expected weight indication. Normal weight indication for grappled FSP is roughly 260 lb.

5.19.14 **ENSURE** at least 8 seconds has elapsed since pendent operation, THEN while monitoring weight indication, **RAISE** grapple about 12 inches, THEN **STOP**.

5.19.15 **VERIFY** the following:

1. Weight indication is consistent with a grappled FSP
2. FSP gripper Interlock flag indicates FULL RED circle.
3. CRB flag indicates HALF YELLOW circle (no change).

> **CAUTION**
>
> Closely monitor load when raising grapple and FSP through top guide.
>
> Top of grapple when Full Up will be above floor of Operator Cab. Closely monitor for obstructions as grapple approaches operator cab.

5.19.16 IF performing first of multiple FSP exchanges, THEN **RECORD** indicated weight for FSP lift on Attachment 12.

5.19.17 **RAISE** grapple to Full Up position (jam block actuates whisker switch) OR elevation clear of obstructions.

5.19.18 IF using jib arm tool, THEN **PERFORM** the following:

1. IF performing the first FSP exchange, THEN **PLACE** tape mark on hoist cable such that lower edge of tape is even with lower surface of jib arm.
2. **LOWER** hoist 2 inches +/- ¼ inch.

> CAUTION
>
> Do not operate hoist with cable positioned in jib arm.

3. With jib arm positioned adjacent to hoist cable, **POSITION** hoist cable in jib arm cable guide AND **CLOSE** gate. **ENSURE** gate is fully closed AND seated in detent.

4. While hoist load indication for potential cable binding, **TURN** jib arm crank to reposition hoist cable to area near front of operator cab.

5.19.19 **POSITION** FSP over rack or other suitable storage area as required.

5.19.20 IF using jib arm tool, THEN **PERFORM** the following:

1. While monitoring for any obstructions, **TURN** jib arm crank to reposition hoist cable to normal vertical position.

2. **REMOVE** hoist cable from jib arm.

NOTE: To release FSP, grapple must be aligned with pin on rack OR preparations need to be made to manually actuate the Interlock manual release rod.

5.19.21 IF required, per CCTAS, THEN **LOWER** FSP in storage position until weight of FSP AND grapple is removed from hoist.

5.19.22 IF required, THEN manually **RAISE** AND **HOLD** FSP Interlock rod.

5.19.23 **ENSURE** FSP Interlock flag indicates a HALF RED circle.

5.19.24 **DEPRESS** pendant ``RELEASE'' push-button to disengage FSP, THEN **RELEASE** manual interlock rod if required.

5.19.25 **VERIFY** FSP gripper flag indicates HALF RED circle, THEN **RAISE** grapple off FSP.

NOTE: The following steps describe FSP installation.

5.19.26 IF FSP is hanging from hoist, THEN **PROCEED** to Step 5.19.34. Otherwise, **PROCEED** to Step 5.19.27.

5.19.27 IF required, THEN per CCTAS **ALIGN** grapple over FSP to be installed. **ENSURE** grapple interlock pin is located over FSP fingers. This is required regardless of whether the fingers are positioned over a pin on a FSP rack.

5.19.28 **LOWER** grapple onto FSP just until grapple weight is relieved from load cell.

5.19.29 **ENSURE** grapple is vertical (plumb) AND is resting fully on FSP.

5.19.30 **DEPRESS** pendant ``ENGAGE'' push-button AND **PAUSE** approximately 8 seconds to allow air cylinder to stroke.

5.19.31 **VERIFY** FSP gripper flag indicates FULL RED circle.

5.19.32 **RAISE** grapple approximately 6 inches THEN **STOP.**

5.19.33 **VERIFY** FSP Interlock indicates FULL RED circle.

> **CAUTION**
>
> Top of grapple when Full Up will be above floor of Operator Cab. Closely monitor for obstructions as grapple approaches operator cab.

5.19.34 **RAISE** grapple AND FSP to Full Up position (jam block actuates whisker switch) OR elevation clear of obstructions.

5.19.35 IF using jib arm tool, THEN **PERFORM** the following:

1. **LOWER** hoist 2 inches +/-1/4 .

> **CAUTION**
>
> Do not operate hoist with cable positioned in jib arm.

2. **POSITION** hoist cable in jib arm cable guide AND **CLOSE** gate. **ENSURE** gate is fully closed AND seated in detent.

3. While monitoring hoist load indication for potential cable binding, **TURN** jib arm to reposition hoist cable to area near front of operator cab.

5.19.36 **TRANSPORT** FSP over control cell per CCTAS.

5.19.37 IF using jib arm tool, THEN **PERFORM** the following:

1. While monitoring for any obstructions, **TURN** jib arm crank to reposition hoist cable to normal vertical position.

2. **REMOVE** hoist cable from jib arm.

5.19.38 **ROTATE** hoist cable to orient grapple with FSP alignment pin.

5.19.39 **LOWER** FSP into guide tube while monitoring for indication of hang-up.

5.19.40 **LOWER** hoist until cable is slack.

5.19.41 Visually **VERIFY** FSP is seated at Guide Tube. IF required, THEN **SAFETY BEND** cable to seat FSP fully.

5.19.42 **HOLD DOWN** air hoses to ensure no tension, THEN **DEPRESS** ``RELEASE'' push-button.

NOTE: Attachment 12 may be available as reference for expected weight indication. Weight of grapple ONLY is roughly 200 lbs.

5.19.43 While monitoring weight indication, **RAISE** grapple.

5.19.44 Using top view camera angle, FHD AND RPO **VERIFY**:

1. Anti-rotation pin is captured by FSP fingers.
2. FSP is fully seated onto CRB guide tube. **CM-2**

5.19.45 IF CRB was replaced, **NOTIFY** HCU/CRD Coordinator that CRB is fully seated in CRB guide tube.

VESSEL DRAINAGE BARRIER, SEE LIMITATION 3.2.15

5.19.46 **ENSURE** grapple is raised above core.

5.20 CRB Swap using NES Combined Grapple

NOTES: This subsection provides instructions for performance of steps which are unique to performing blade swaps. This subsection must be used in conjunction with other subsections of this procedure to complete a full blade swap sequence.

A vacant adjacent fuel cell is required to support performance of this subsection.

5.20.1 IF CCTAS step calls for removal of a CRB from a control cell using the Combined Grapple with an FSP attached to it, THEN perform the following:

1. **REQUEST** HCU/CRD Coordinator to verify CRB is UNCOUPLED AND two cell separation criteria is met (ref. 7.2.2, 7.2.12).
2. Per CCTAS, **POSITION** grapple over CRB to be moved.

NOTE: The following step orients the grapple interlock plunger away from the core plate pin so that the FSP interlock remains active (engaged).

3. **ROTATE** hoist cable to orient grapple with two red indicating arrows pointing toward corner of top guide opening as follows:

   PBAPS - NORTHEAST

   LGS - SOUTHEAST

4. Carefully **LOWER** grapple AND FSP through top guide while checking load cell AND camera monitor for indication of hang-up.

5. **CONTINUE LOWERING** grapple just until FSP begins to fit over CRB THEN **STOP**.

6. **VERIFY** FSP Interlock flag indicates a FULL RED circle, THEN **DEPRESS** ``RELEASE'' push-button, AND VISUALLY **VERIFY** that FSP does not release from grapple.

NOTE: Maintenance history indicates that sometimes a FSP from one cell will not fully seat in another cell. For the performance of the following step it is not critical for the FSP to seat fully (it is not being released).

7. **CONTINUE LOWERING** grapple until cable is slack.

8. Visually **CHECK** CRB grapple mechanism is lowered sufficiently to engage the CRB.

> **CAUTION**
>
> Do not manipulate hoist cable for at least 8 seconds following pendent operation. Premature manipulation of hoist cable could result in improper grappling of CRB.

9. **DEPRESS** ``ENGAGE'' push-button, AND **WAIT** approximately 8 seconds.

NOTE: Normal weight indication for FSP + CRB is roughly 460 lbs.

CAUTION

Monitor hoist weight indication for a consistent load as blade is being raised to verify CRB is uncoupled from its associated drive.

10. **RAISE** hoist approximately 6 inches, THEN **VERIFY** the following:

    a. Weight indication is consistent with a grappled FSP & CRB.

    b. CRB flag is indicating FULL YELLOW circle, AND FSP interlock AND Gripper flags indicate FULL RED circles.

11. IF CRD exchange is being performed concurrently with this procedure, THEN **REQUEST** undervessel personnel to verify NO gross leakage is present from open CRD housing(s).

    a. IF gross leakage is present, THEN IMMEDIATELY **LOWER** CRB until fully seated AND **NOTIFY** RO AND **SUSPEND** blade removal operations.

VESSEL DRAINAGE BARRIER, SEE LIMITATION 3.2.15

CAUTION

Closely monitor components when raising grapple and FSP and velocity limiter through top guide.

12. **RAISE** grapple through top guide AND above core.

5.20.2 IF CCTAS step calls for installation of a CRB only into a control cell using the Combined Grapple with an FSP attached to it, (i.e. FSP is not to be released), THEN perform the following:

1. **TRANSPORT** CRB over control cell per CCTAS.

NOTE: The following step orients the grapple interlock plunger away from the core plate pin so that the FSP interlock remains active (engaged).

2. **ROTATE** hoist cable to orient grapple with two red indicating arrows pointing toward corner of top guide opening as follows:

   PBAPS - NORTHEAST

   LGS - SOUTHEAST

> **CAUTION**
>
> Hang-up of CRB at Top Guide or Guide Tube could result in a CRB drop of 6 inches within grapple frame should hang-up suddenly release. Closely monitor indicated load and components when lowering through top guide AND when velocity limiter enters guide tube.

3. Carefully **LOWER** CRB through top guide and into guide tube while checking load cell AND camera monitor for indication of hang-up.

NOTE: Maintenance history indicates that sometimes a FSP from one cell will not fully seat in another cell. For the performance of the following step it is not critical for the FSP to seat fully (it is not being released).

4. **LOWER** hoist until FSP has at least partially entered Guide Tube AND cable is slack.

5. **VERIFY** FSP Interlock flag indicates a FULL RED circle, THEN **DEPRESS** ``RELEASE'' push-button AND **PAUSE** approximately 8 seconds.

6. While monitoring weight indication, **RAISE** grapple approximately 1 foot to clear CRB bail handle AND **VERIFY** FSP is still engaged to grapple.

7. **DEPRESS** ``ENGAGE'' push-button.

8. **RAISE** grapple and FSP through top guide AND above core.

6.0 **RETURN TO NORMAL**

6.1 Job Leader **VERIFY** the following and record on MT:

6.1.1 All tools and equipment returned to designated storage location.

6.1.2 Work area is clean AND proper housekeeping practices involving tools, equipment, and materials have been followed.

6.1.3 RPO AND FHD copies of CCTAS are complete AND originals or copies are returned to Reactor Engineering.

6.2 **VERIFY** name and initials of each person who initialed MT entered on last page of MT.

6.3 **VERIFY** procedure complete AND MT is attached to WO. **RECORD** on MT.

7.0 REFERENCES

7.1 Vendor/Technical Manuals

7.1.1 A41-8010-K-021, Operation and Maintenance Instructions, Reactor Assembly and Servicing Equipment, Volume II Part 1, Sections IV and V (LGS)

7.1.2 6280-M-1-JJ-102, General Electric Co. GEK-9684, Volumes I and VI (PBAPS)

7.1.3 Operating and Maintenance Instructions, Control Rod Servicing Tooling (Take 2 Tooling) GEK-103853A.

7.1.4 NES Control Rod Blade/FSP Combination Grapple Operation and Maintenance Manual, LGS Doc ID: 160-N-VC-12

7.2 Plant Procedures/Drawings

7.2.1 A-C-33, Nuclear Generation Group Process for Verification of Quality

7.2.2 GP 13, Control Rod Drive/Control Blade/Hydraulic Control Unit Outage Maintenance Coordination Procedure (LGS)

7.2.3 FH-105, Core Component Movement - Core Transfers (LGS)

7.2.4 ST-6-097-630-*, Refueling Interlock Functional Test (LGS)

7.2.5 ST-6-107-633-*, Refueling Surveillance Testing During the Period When the Core is Offloaded (LGS)

7.2.6 S53.0.A, Normal Makeup / Response to Low Level in Fuel Storage Pool or Reactor Well (LGS)

7.2.7 S97.1.A, Electrical and Pneumatic Alignment of Refueling Platform Bridge, Trolley, and Main Hoist for Operation (LGS)

7.2.8 S97.0.K, Bypassing the Boundary Zone Computer (LGS)

7.2.9 S97.2.A, Shutdown of the Refueling Platform (LGS)

7.2.10 FH-6C, Core Component Movement - Core Transfers (PBAPS)

7.2.11 SO18.1.A-*, Operation of Refueling Platform (PBAPS)

7.2.12 GP-26, Coordination of HCU, CRB, and CRD Work During a Refuel Outage (PBAPS)

7.2.13 ST-0-18-120-*, Refueling Interlock Functional Test (PBAPS)

7.2.14 ST-0-18-125-*, Refueling Interlock Functional Test With the Inability to Withdraw Control Rods (PBAPS)

7.2.15 RE-C-40, Core Component Transfer Authorization Sheet Generation and Administration.

7.2.16 A-C-132, Spent Fuel Pool Material Storage/Inventory And Housekeeping

7.2.17 OP-AA-101-111, Roles and Responsibilities of On-Shift Personnel

7.2.18 M-C-797-003, Underwater Vacuum Cleaner Examination, Maintenance and Operation

7.2.19 A-C-130, Fuel Floor Foreign Material Exclusion [PBAPS]

7.2.20 MA-AA-716-008, Foreign Material Exclusion Program [LGS]

7.2.21 SO 18.1.C-2/3, Electrical, Mechanical, and Pneumatic Alignment/Checkout of Refueling Platform

7.3 <u>Miscellaneous</u>

7.3.1 LGS UFSAR Sections 15.7.4 and 15.7.6 and PECO Calculation LM-033, Methodology to Determine the Acceptability of Moving Loads Over Irradiated Fuel Without Secondary Containment.

7.3.2 REIF/EIR 91-04-20 (LGS)

7.3.3 SIL No. 082, Securing Mechanical Cable Terminals

7.3.4 SIL No. 342, Avoiding a Dropped Control Rod During Reactor Servicing

7.3.5 SIL No. 454, Control Rod Latch Tool Malfunction

7.3.6 SIL No. 547, Control Rod Latch Tool Engagement

7.3.7 A1246121 E2, E3 Engineering evaluations of Jib Arm Tool and Combined grapple staging device.

7.3.8 LG ECR 00-00879, Combined Grapple for PBAPS and LGS

7.3.9 LG NCR 98-02484, Dedication of Combined Control Rod/Fuel Support Grapple

7.3.10 PEP Issue I0012487, FSP Mis-grappled due to Improper Seating of Grapple

7.4 Commitments

7.4.1 CM-1, REIF/EIR 92-04-27, CA-3, AR A0400493 (LGS)

7.4.2 CM-2, T02025 REIF/EIR 92-04-34, CA-2, AR A0397230 (LGS)

7.4.3 CM-3, REIF/EIR 92-04-35, CA-3, AR A0400493 (LGS)

7.4.4 CM-4, T01059, T01658 (LGS)

7.4.5 CM-5, T01138 (LGS)

7.4.6 CM-6, T02106 (PBAPS), ARs A0658653 & A0658627, OEAP, GE SIL 547

7.4.7 CM-7, PORC Meeting 92-141 Minutes (LGS)

7.4.8 CM-8, PEP Issue I0001540

7.4.9 CM-9, PEP Issue I0000293

8.0 **ATTACHMENTS**

8.1 Attachment 1, CRB Latch Tool

8.2 Attachment 2, CRB Grapple

8.3 Attachment 3, FSP Grapple

8.4 Attachment 4, Grid Guide

8.5 Attachment 5, FSP

8.6 Attachment 6, Control Rod Blade

8.7 Attachment 7, Guide Tube Seal

8.8 Attachment 8, Jet Pump Grapple

8.9 Attachment 9, Guide Tube Grapple

8.10 Attachment 10, Guide Tube Vacuum Pole Set-up

8.11 Attachment 11, NES Combination Grapple

8.12 Attachment 12, Indicated Weights During CRB Exchange

Maintenance Traveler (MT)

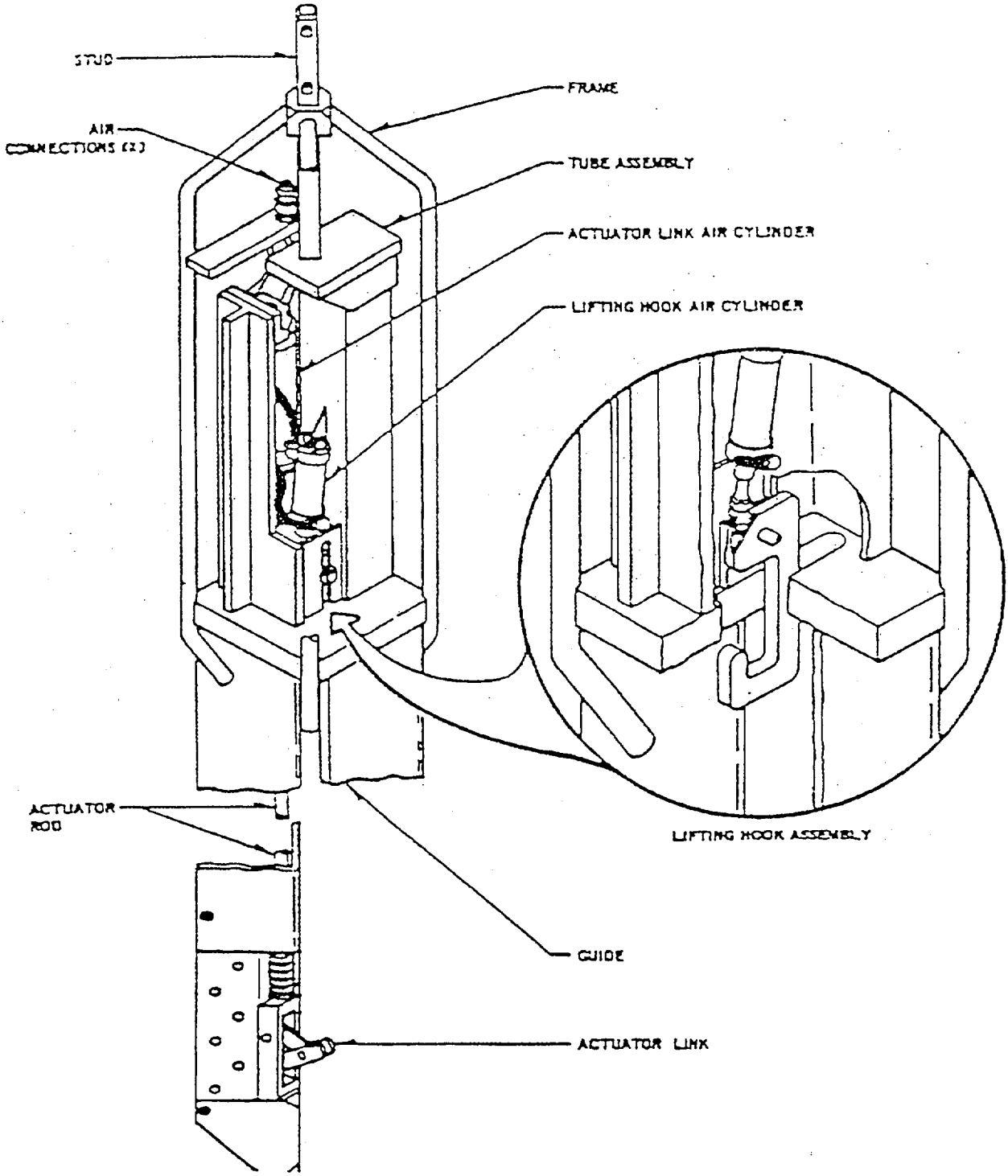

CRB LATCH TOOL

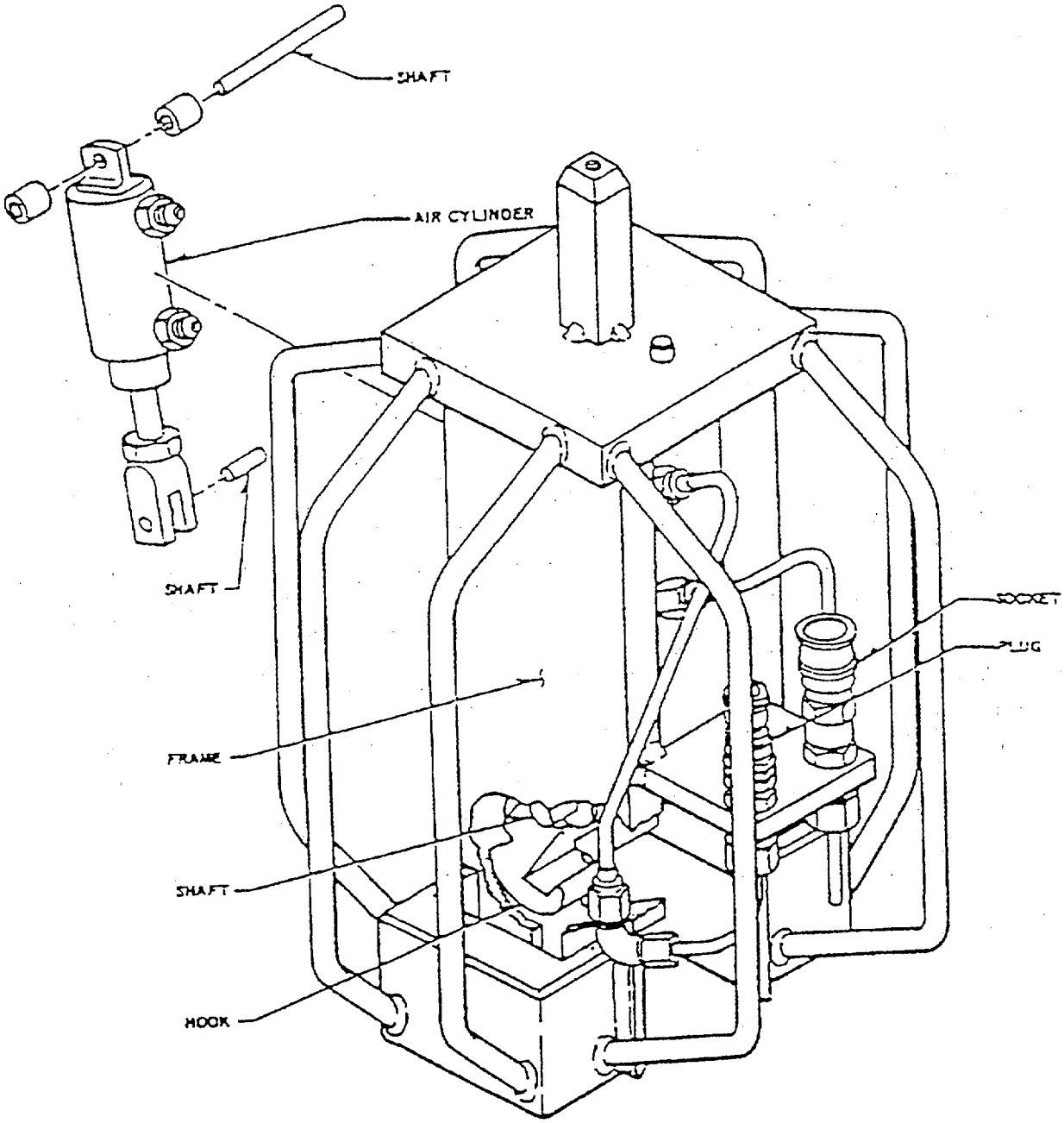

PBAPS CRB GRAPPLE

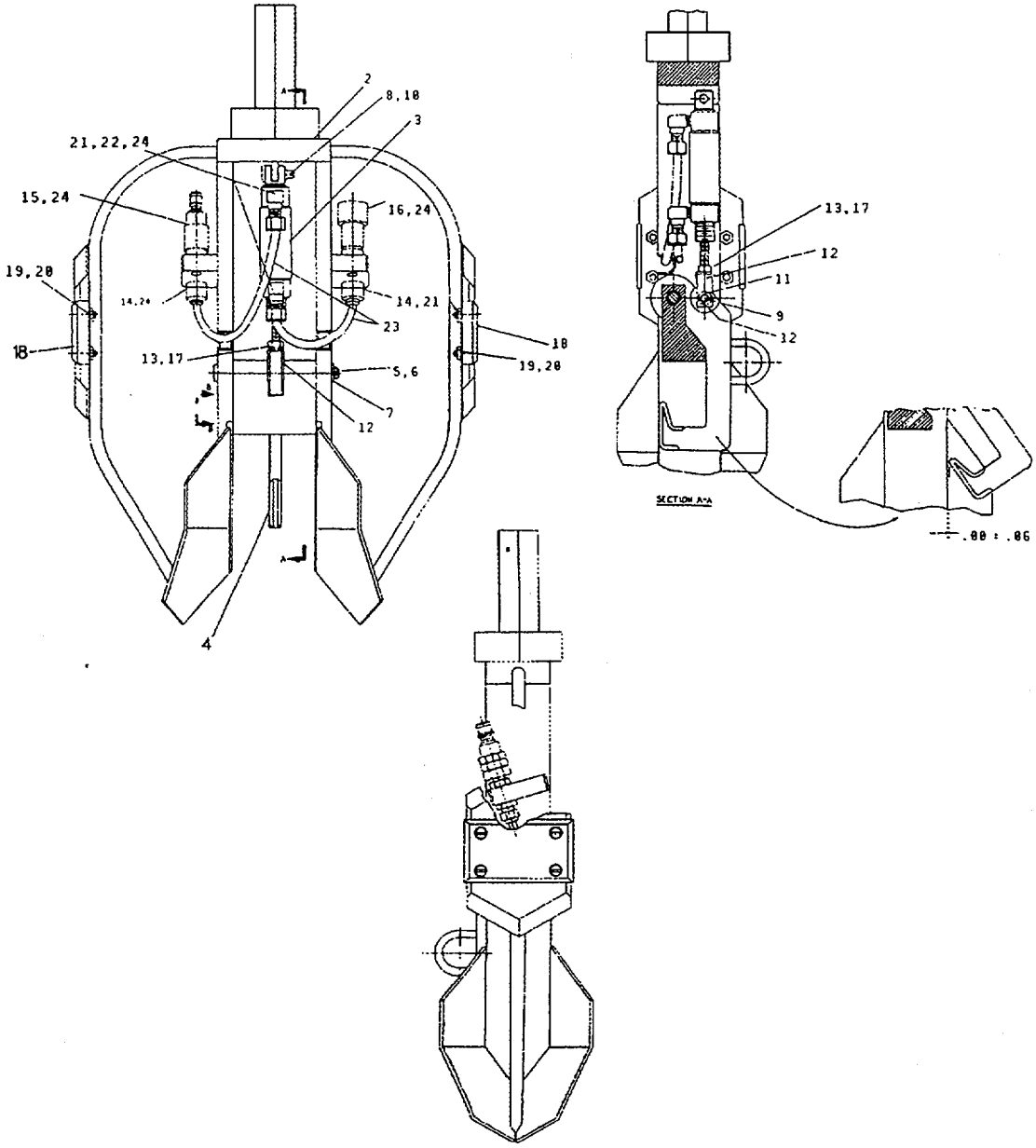

LGS CRB GRAPPLE

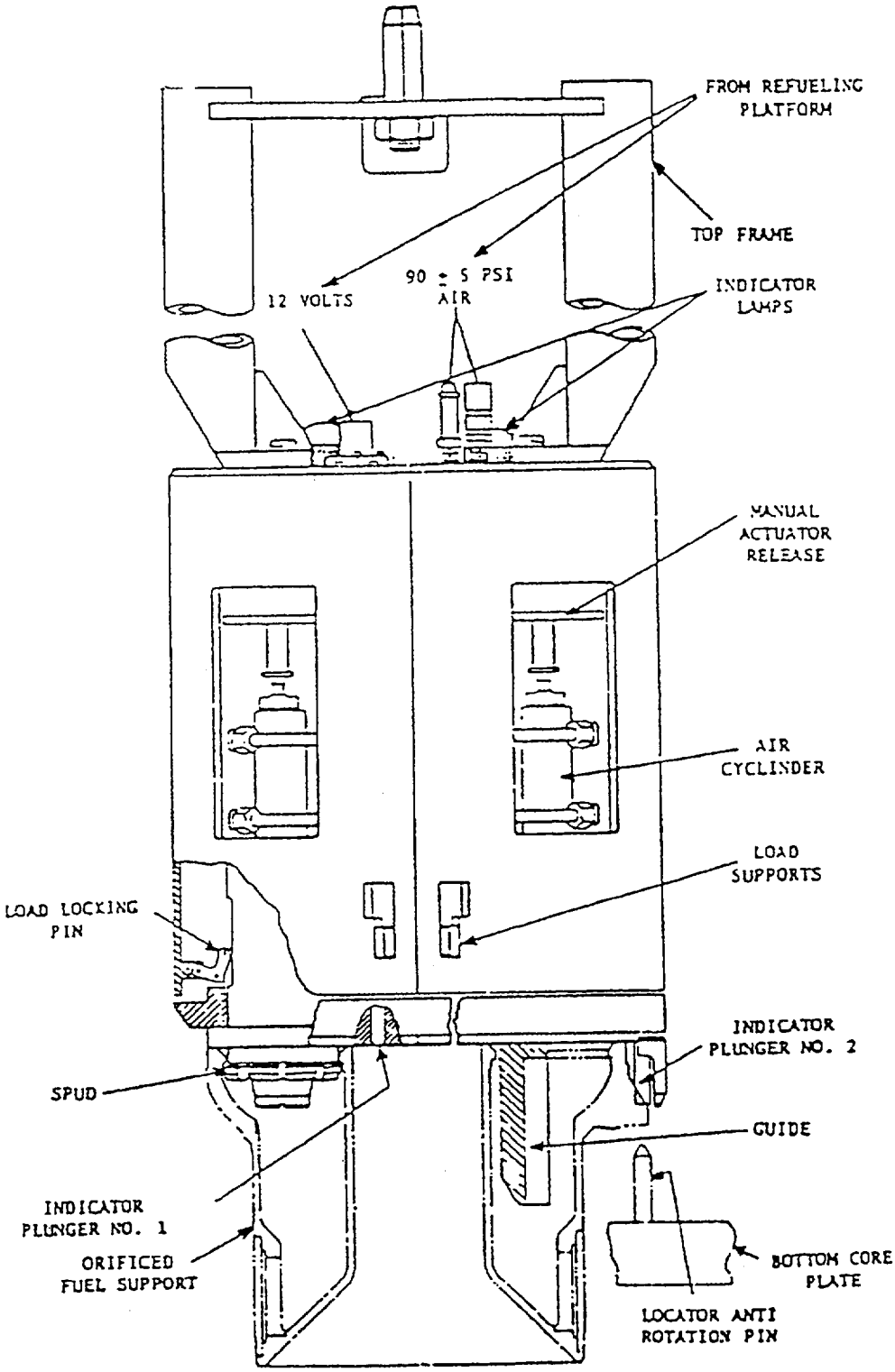

FSP GRAPPLE
Limerick

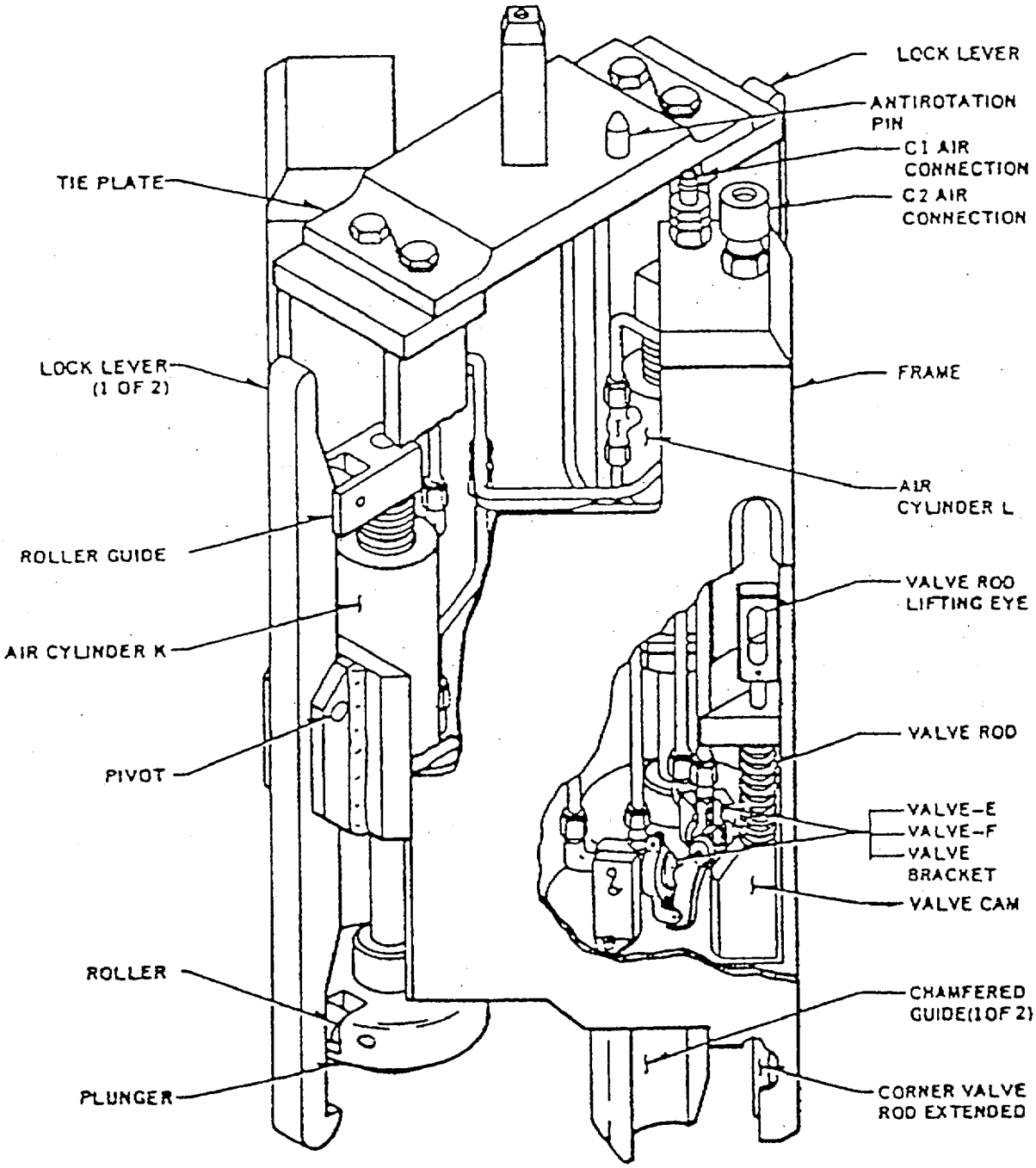
LOCK LEVER
ANTIROTATION PIN
C1 AIR CONNECTION
C2 AIR CONNECTION
TIE PLATE
LOCK LEVER (1 OF 2)
FRAME
AIR CYLINDER L
ROLLER GUIDE
VALVE ROD LIFTING EYE
AIR CYLINDER K
VALVE ROD
PIVOT
VALVE-E
VALVE-F
VALVE BRACKET
VALVE CAM
ROLLER
CHAMFERED GUIDE(1OF 2)
PLUNGER
CORNER VALVE ROD EXTENDED

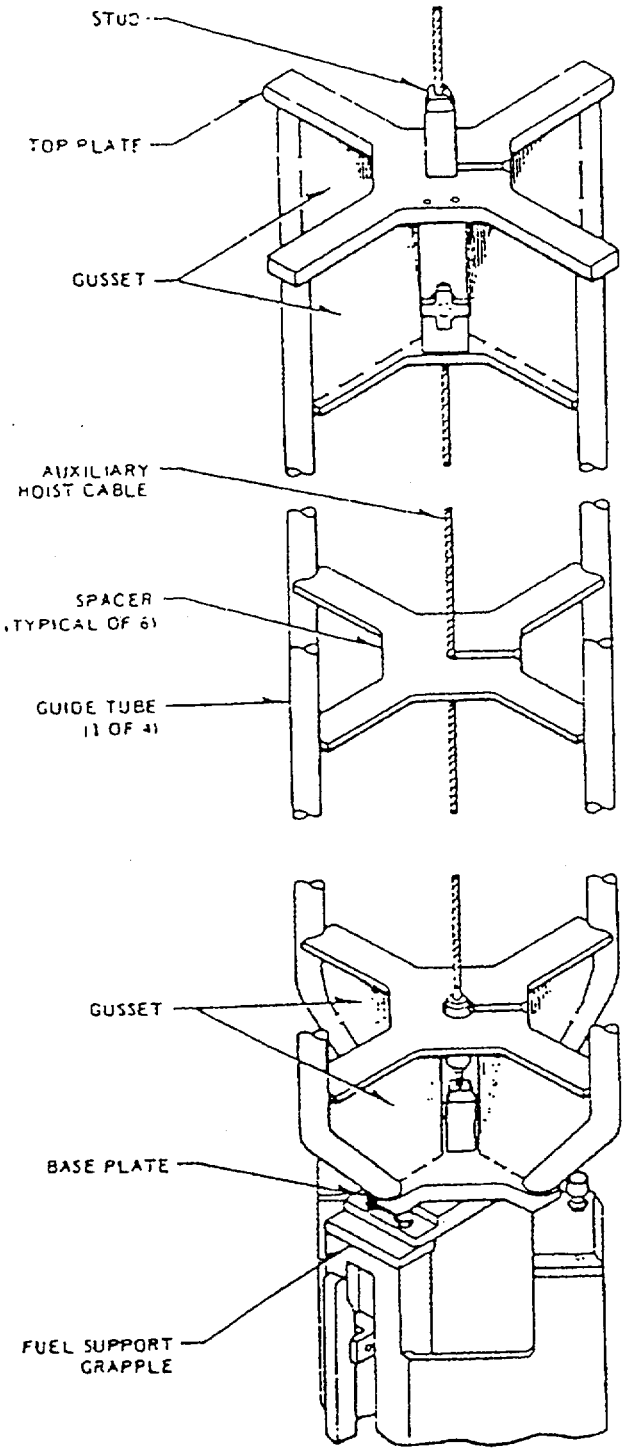

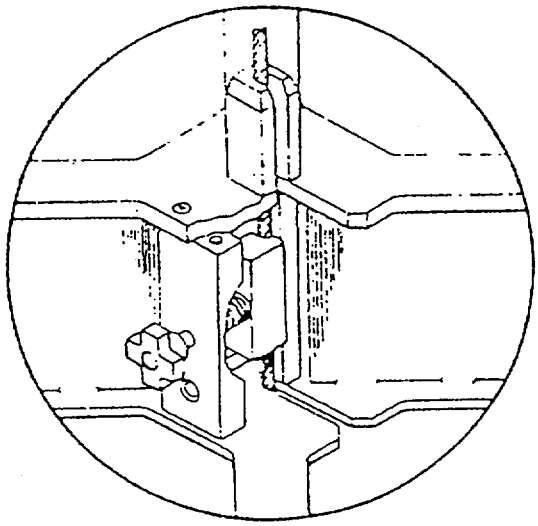

CLAMP-JAW ASSEMBLY
ROTATED 45°

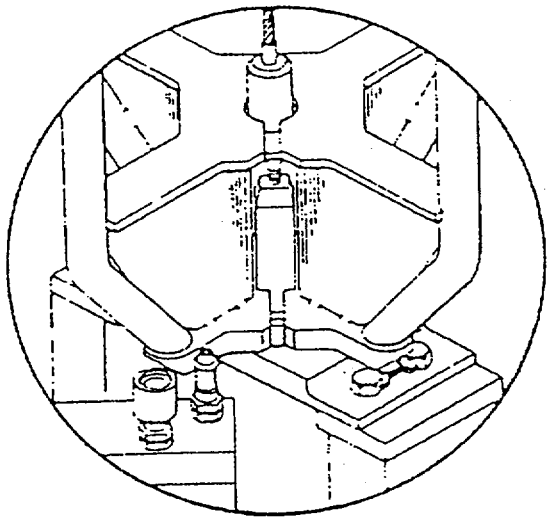

BASE PLATE DETAIL ON FUEL
SUPPORT GRAPPLE
ROTATED 90°

GRID GUIDE

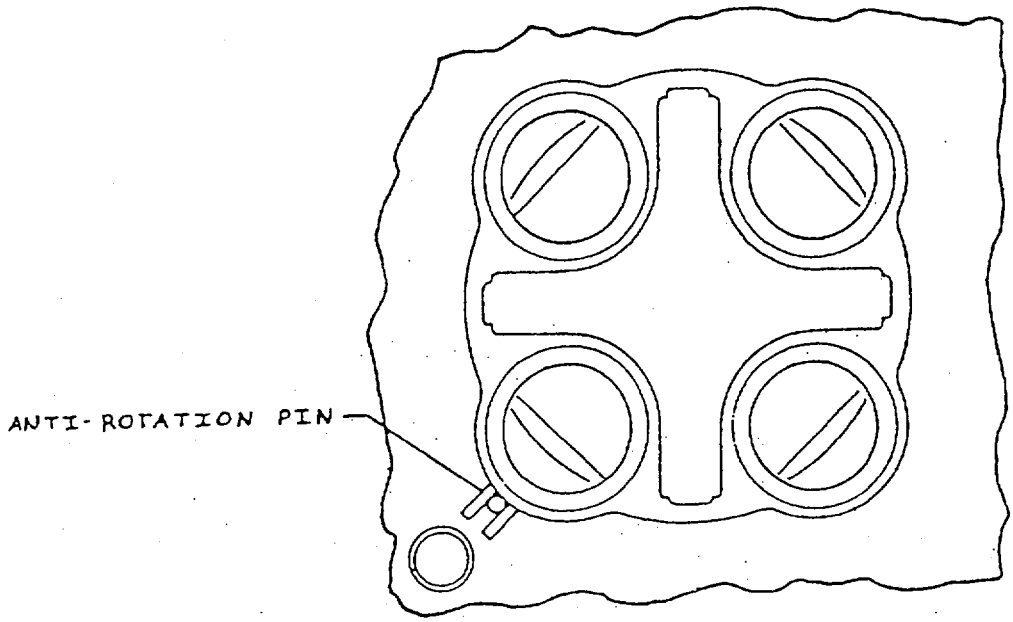
ANTI-ROTATION PIN

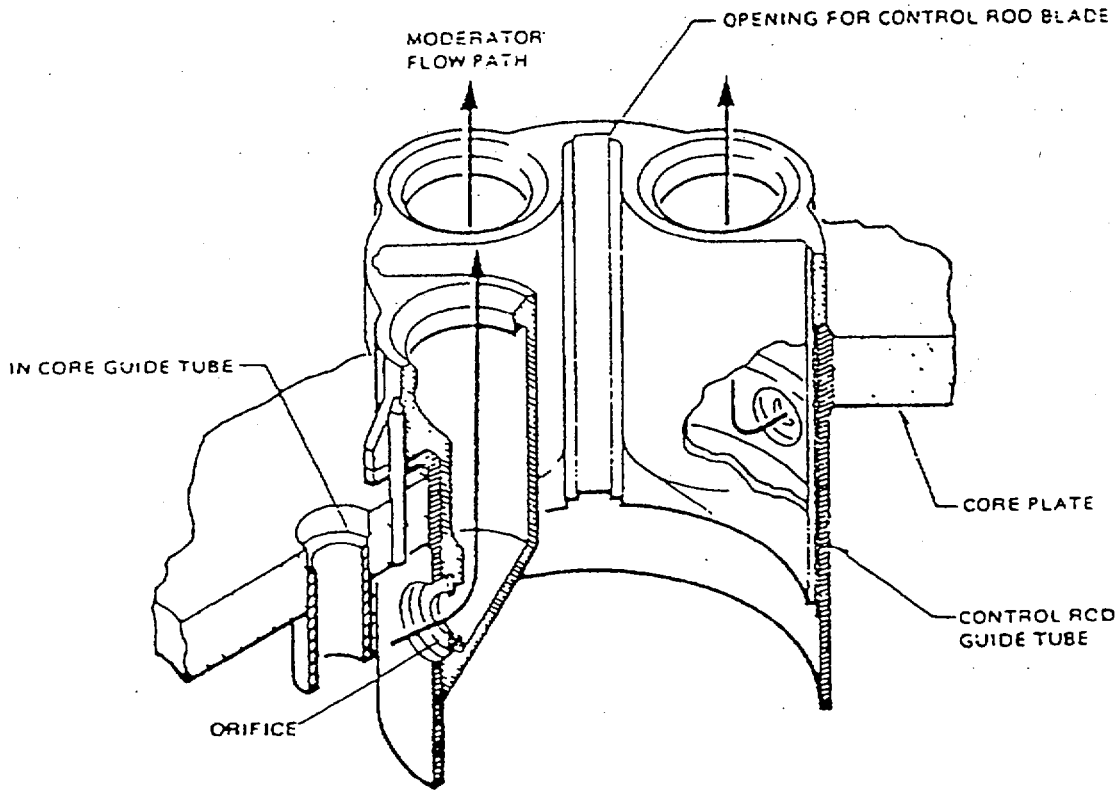
MODERATOR FLOW PATH
OPENING FOR CONTROL ROD BLADE
IN CORE GUIDE TUBE
CORE PLATE
CONTROL ROD GUIDE TUBE
ORIFICE

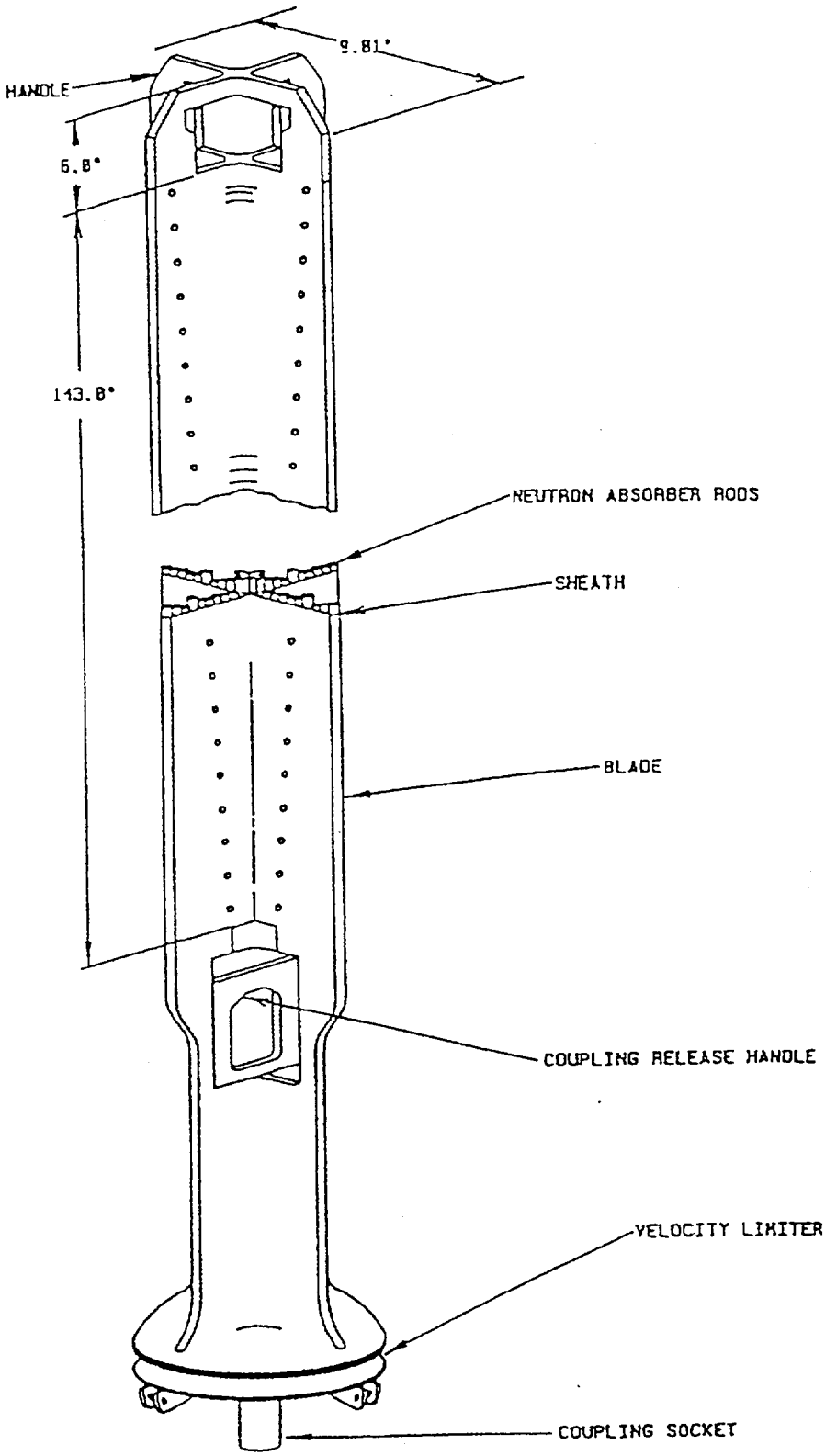

CONTROL ROD BLADE

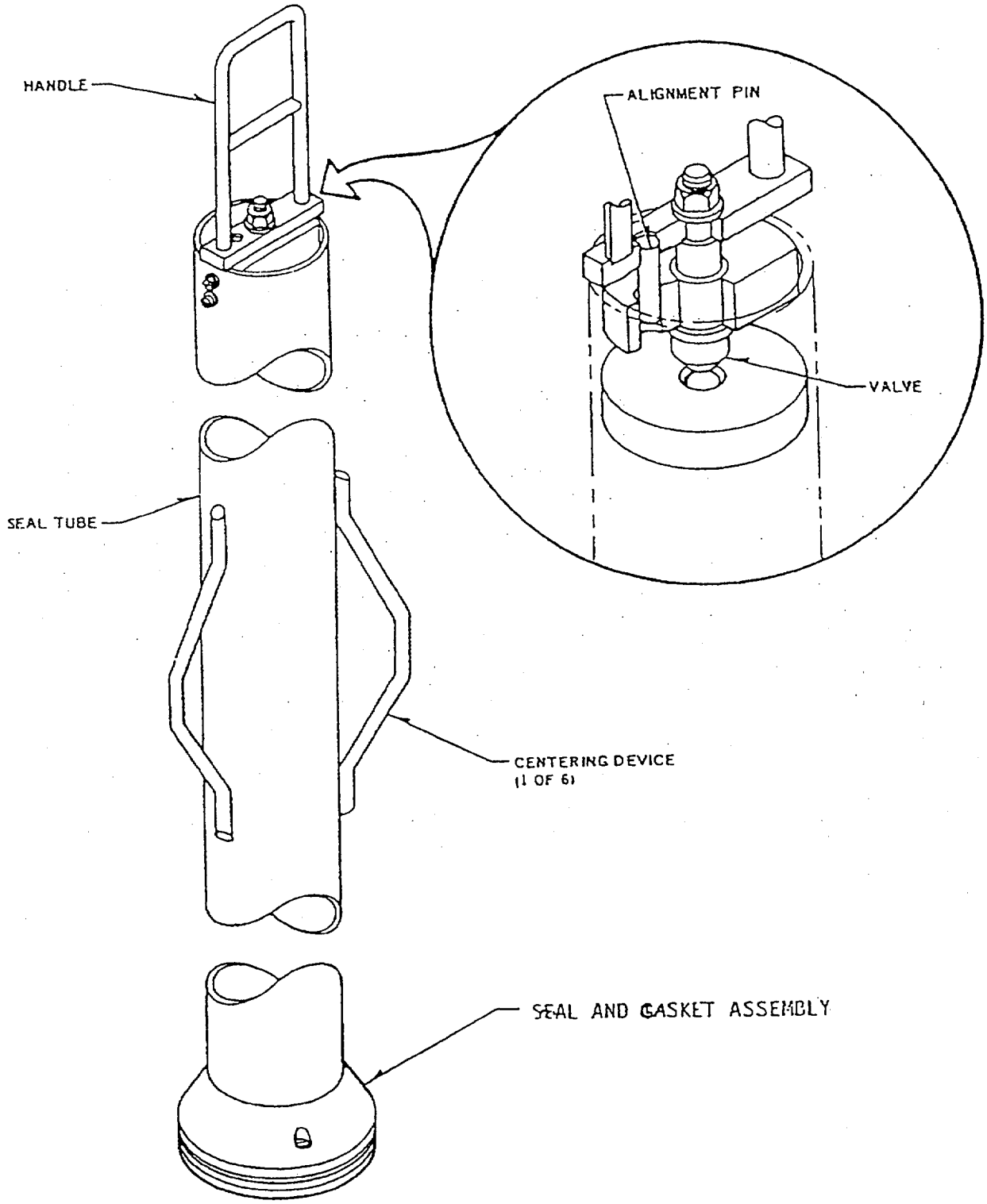

GUIDE TUBE SEAL

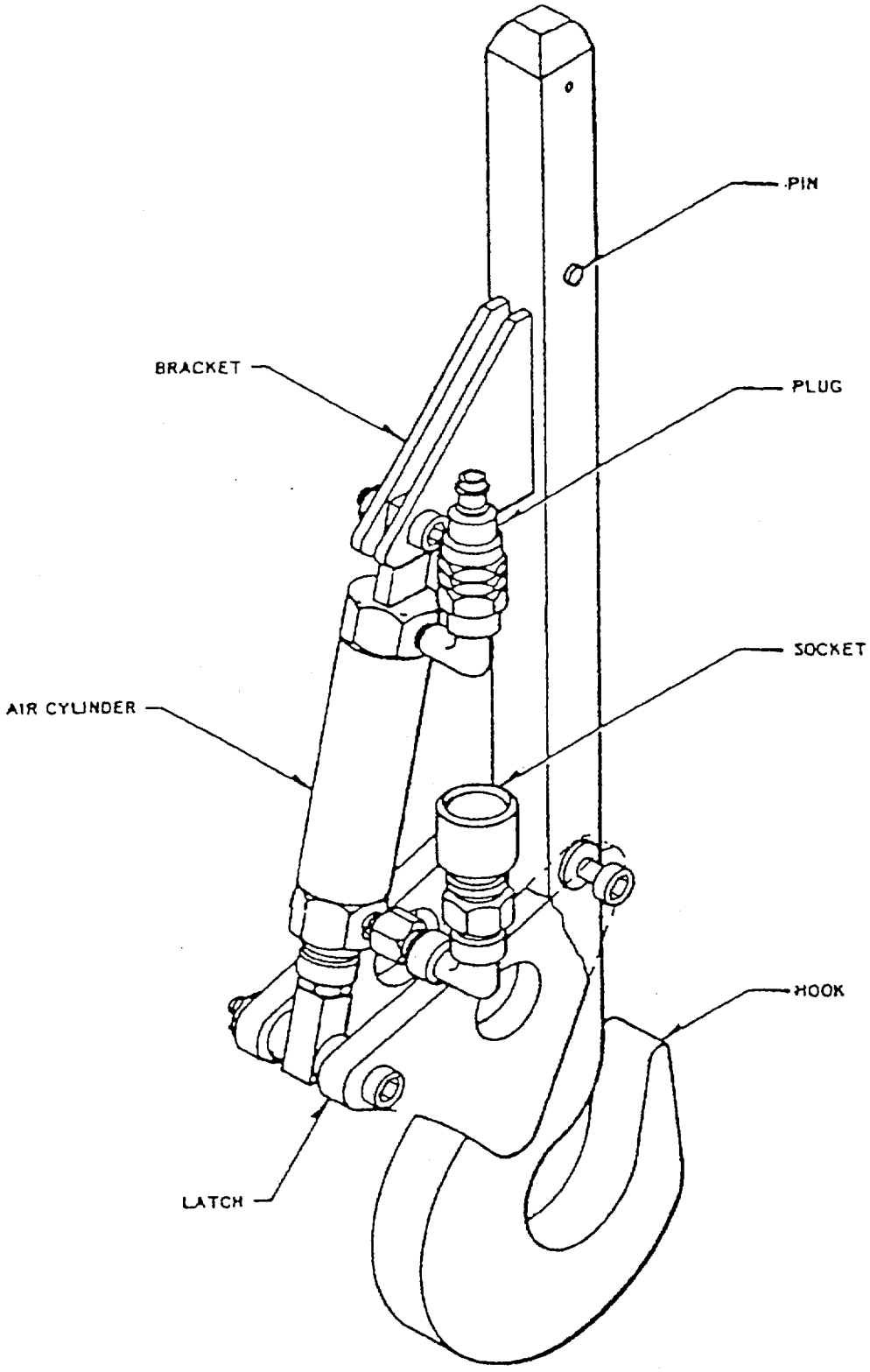

JET PUMP GRAPPLE

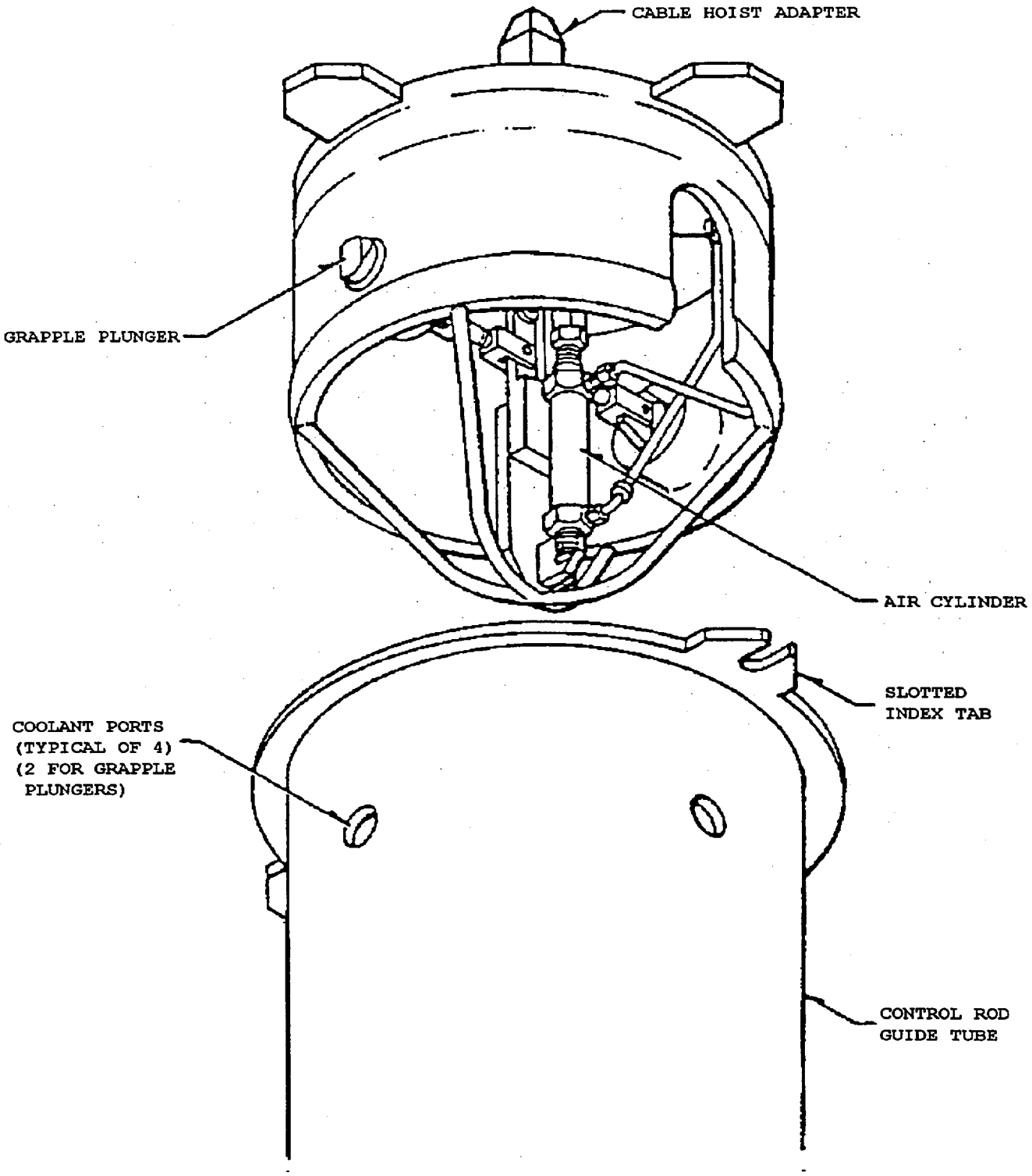

GUIDE TUBE GRAPPLE

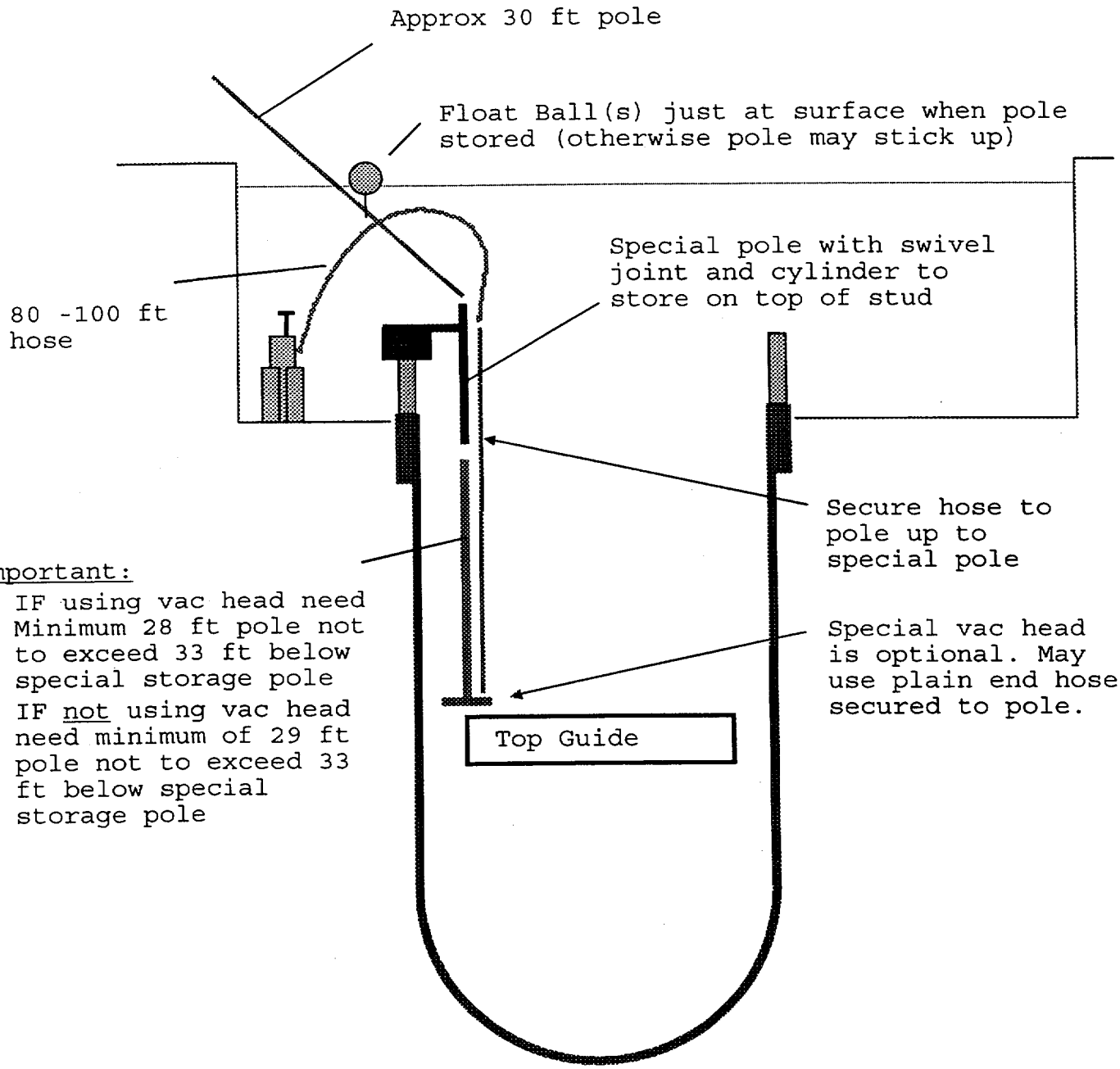

Important:

- IF using vac head need Minimum 28 ft pole not to exceed 33 ft below special storage pole
- IF not using vac head need minimum of 29 ft pole not to exceed 33 ft below special storage pole

GUIDE TUBE VACUUM POLE SET-UP

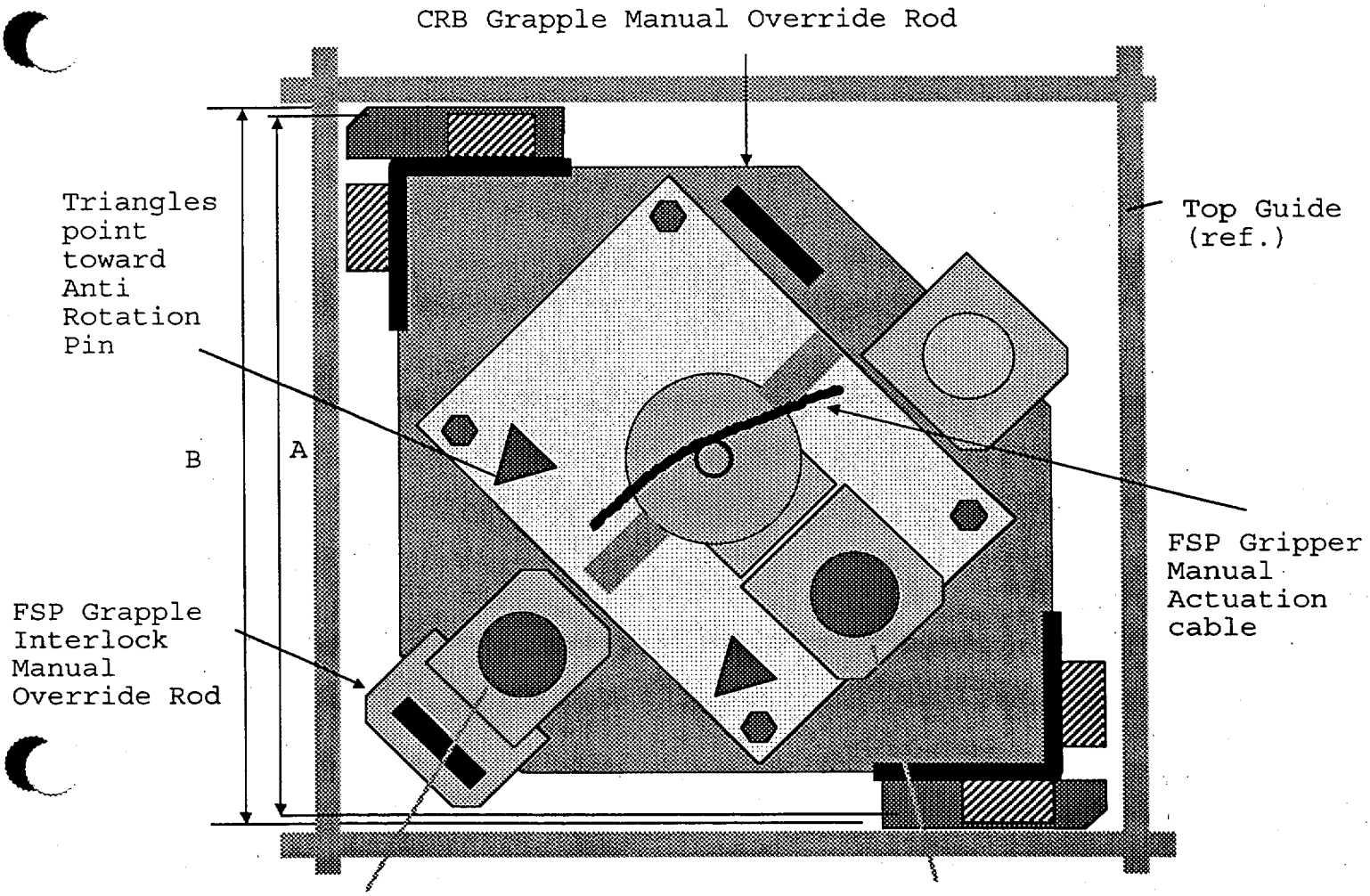

FSP Interlock Flag (red):

- FULL RED circle means FSP grippers Locked in ENGAGED
- HALF RED circle means FSP grippers NOT locked
- When returning an FSP to the core, change from Full to half red circle is a good indication that FSP is seated

FSP Gripper Flag (red):

- FULL RED circle means FSP grippers ENGAGED
- HALF RED circle means FSP grippers RELEASED

CRB Flag (yellow):

- FULL YELLOW circle means CRB bail is resting on grapple hook
- HALF YELLOW circle means CRB not in contact with hook
- Note that status is not directly indicative of hook position

Shim Infomation: Dim A (2 x) (Over Guide Bars)	Dim B (1 way) (Over scales)
PB 11.39 +/- .031	11.44 +/- .031
LGS 11.20 +/- .031	11.25 +/- .031

NES COMBINATION GRAPPLE

WEIGHT INDICATIONS DURING CRB EXCHANGE
(Hoist Raising Direction)

- FSP Lift*: _____
(Mark N/A if using GE Combined Grapple)

- CRB Lift: _____
(Mark N/A if using NES Combined Grapple)

- FSP + CRB Lift: _____
(Combined Grapple only)

- Grapple Empty: _____

* When using NES Combined Grapple, FSP only weight can only be detected within approx. the first 3 inches of grapple motion.

NOTE: If additional space is required to record information then additional MT sheets shall be attached and information recorded in Remarks Section.

4.0	**PREREQUISITES**	INITIAL/DATE
4.12	Prerequisites complete, precautions and limitations understood.	_____

5.0 **PROCEDURE**

NOTE: All sign-offs are made on CCTAS.

6.0 **RETURN TO NORMAL**

6.1 Job Leader verified the following:

6.1.1	All tools and equipment returned to designated storage location.	_____
6.1.2	Work area is clean and proper housekeeping practices involving tools, equipment and materials have been followed.	_____
6.1.3	RPO AND FHD copies of CCTAS are complete and originals or copies are returned to Reactor Engineering.	_____
6.3	Procedure complete and MT attached to WO.	_____

EQP#_____
WO#_____

PRINTED NAME	SIGNATURE	INITIALS

REMARKS:

EQP#_____

WO#_____

TITLE: Storage of the Tri-Nuclear Underwater Vacuum Unit

TASK PERFORMED BY: _____ EVALUATOR: _____

EVALUATOR SIGNATURE: _____ DATE: _____

DIRECTIONS TO EVALUATOR:

EVALUATION METHOD :

PERFORM

EVALUATION LOCATION:

REFUEL FLOOR

APPROXIMATE COMPLETION TIME:

Completion Time 10 minutes

IMPORTANCE RATING(S): SYSTEM NUMBER(S):

3.5 2.2.27

REFERENCES:

1. M-C-797-003 Rev 3, UNDERWATER VACUUM UNIT AND FILTER UNIT EXAMINATION, OPERATION, AND MAINTENANCE
2. A-C-132, Rev 1, SPENT FUEL POOL MATERIAL STORAGE,/INVENTORY AND HOUSEKEEPING
3. AG-CG-132, REV 0, SPENT FUEL POOL INVENTORY / INSPECTION

TASK STANDARD(S):

Permitted spent fuel pool location identified and fuel pool log updated

TASK CONDITIONS:

1. Underwater vacuuming operations are complete in the Unit 3 reactor cavity using the Tri-Nuc UFV-260 vacuum
2. The vacuum is currently seated on the north side of the core
3. The vacuum is to be stored in an authorized area of the Unit 3 spent fuel pool
4. Dose rate on-contact with the filter area of the vacuum is 7500 mRem/hr
5. A Fuel Pool Material Log is provided
6. A map of the Unit 3 spent fuel pool has been provided
7. The Spent Fuel Pool Material Coordinator has authorized the long-term storage of the vacuum in the spent fuel pool under ID No. UFV-260-1
8. Health Physics coverage is present in the work area.
9. Reactor Building Secondary Containment Integrity is NOT established

INITIATING CUES:

You are directed to:

1. Determine whether the hoisting and movement of the vacuum can proceed based on the above conditions
2. Determine an authorized storage location for the vacuum in the Unit 3 spent fuel pool
3. Indicate the storage location on the map provided, and
4. Make the corresponding entry to the blank Fuel Pool Material Log provided

You may only use the copies of references provided. The actual filled-in copies on the refuel floor are not available during this JPM.

Critical Element(s) indicated by "*" in Performance Checklist.

PERFORMANCE CHECKLIST:

STEP	STANDARD	SAT/UNSAT
Determining that the Vacuum is not a permitted light load and that Secondary Containment Integrity is required (M-C-797-003 / FH-106)		
(Note: Step 1 in the JPM is only quoting portions of lengthy steps) From M-C-797-003 Step 4.8 1. *If handling an Underwater vacuum UFV-260 or filtration unit UFV-600 then verify the following systems are in compliance with their respective requirements... a. Secondary Containment From FH-35 Step 4.8 Secondary containment ...this prerequisite also applies the handling of other loads over irradiated fuel seated in the spent fuel pool...unless an analysis has been performed justifying otherwise From FH-35 Table 1 , Allowed Light Loads TriNuc vacuum or filter unit is not a permitted light load (the TriNuc listed is just for the filter *cartridge)* From M-C-797-003 Attachment 2 Weight submerged is 250 LB CUE: (If asked) No engineering analysis has been performed to permit heavy loads over the fuel without containment	Determine that under the current conditions (no secondary containment) the movement of the vacuum is prohibited. OR Movement is permitted after establishing secondary containment	
Determining Fuel Pool Storage Location (A-C-132)		
2. Storage location limitations and radiation protection requirements		

STEP	STANDARD	SAT/UNSAT
a. *Storage of items on top of fuel is prohibited	Selected location is not on top of fuel	
b. *Items shall not be stored directly on top of or inside fuel or CRB storage racks unless specific approval from Site Engineering, Civil/Structural Branch and/or Site Reactor Engineering is obtained and documented	Selected location os not on top of CRB or Fuel Racks	
c. *Items shall not be stored in any manner which would interfere with installation or removal of pool gates	Selected location is not obstructing gates	
d. Long-term storage of irradiated items surveyed to be equal to or greater than 1000R/hr on-contact shall be stored at an elevation equal to or below the top of the fuel storage racks	N/A – not an irradiated item greater than 1000R/hr	
3. Radioactive material which has been surveyed to be equal to or greater than 1000mr/hr on contact, shall be locked by Radiation Protection when stored within the pool to prevent inadvertent removal from the fuel pool or cask pit CUE: HP will release the vacuum to the spent fuel pool		
a. Alternatively, material may be released to the Fuel Pool or Cask Pit floor (i.e. no cable remains attached to item) in a location determined acceptable by radiation protection group CUE: HP will release the vacuum to the spent fuel pool with no cable attached in the location you select	Location selected is on the fuel pool floor	

STEP	STANDARD	SAT/UNSAT
4. *Radioactive material, which has been surveyed to be equal to or greater than 1000 mr/hr on contact, shall be a minimum of 7 feet from the fuel pool gate installation location at the refuel slot. This will preclude potential for excessive radiation levels within the refuel slot during personnel occupancy of the refuel slot during outages	Location selected is not within 7 feet of the gates	
At his point, if necessary, cue the candidate to mark the fuel pool map with the location to which he or she will move the vacuum	Location indicated on map meets all restrictions	
5. CUE: The vacuum has been moved using the service platform and pump lifting tool	N/A	
Update Fuel Pool Material Log (AG-CG-132)		
6. Pool material log including map shall be updated by workers as reqired when items within the scope of A-C-132 are added to, removed, or relocated in the pools CUE: **Provide attached blank log page**	Recognize that the vacuum unit is covered under A-C-132 Step 2.1 pp. 2 as a refuel service tool and requires tracking	
7. Description of items on log should be detailed and account for each separate item when practical	Description entered should have unique ID no and describe item as vacuum UFV-260-1 Underwater vacuum	
8. Original storage date of degradable materials should be maintained on the Pool Material Log. This information, combined with inspection results will enable Spent Fuel Materials Coordinator to evaluate pool cleanout needs	Date entered	
9. For tracking purposes, each entry into log should be assigned a unique ID#	ID # UFV-260-1 entered	
10. All items except those fully released to the Fuel Pool or the Cask Pit floor or a storage rack should be tagged with the item's unique ID#	N/A – the vacuum is released to the floor	

STEP	STANDARD	SAT/UNSAT
11. An entry should be made on a pool map to indicate location of the item(s) stored. This entry should be the ID# from the log. Additional annotations should be made to enhance clarity when required	Map updated to show UFV-260-1 in the selected location	
12. CUE: You have reached the termination point for this JPM. You may stop here		

Comments:

Note: Any grade of UNSAT requires a comment.

JPM Overall Rating: _____
SAT/UNSAT

TASK CONDITIONS:

1. Underwater vacuuming operations are complete in the Unit 3 reactor cavity using the Tri-Nuc UFV-260 vacuum
2. The vacuum is currently seated on the north side of the core
3. The vacuum is to be stored in an authorized area of the Unit 3 spent fuel pool
4. Dose rate on-contact with the filter area of the vacuum is 7500 mRem/hr
5. A Fuel Pool Material Log is provided
6. A map of the Unit 3 spent fuel pool has been provided
7. The Spent Fuel Pool Material Coordinator has authorized the long-term storage of the vacuum in the spent fuel pool under ID No. UFV-260-1
8. Health Physics coverage is present in the work area.
9. Reactor Building Secondary Containment Integrity is NOT established

INITIATING CUES:

You are directed to:

1. Determine whether the hoisting and movement of the vacuum can proceed based on the above conditions
2. Determine an authorized storage location for the vacuum in the Unit 3 spent fuel pool
3. Indicate the storage location on the map provided, and
4. Make the corresponding entry to the blank Fuel Pool Material Log provided

You may only use the copies of references provided. The actual filled-in copies on the refuel floor are not available during this JPM.

CANDIDATE

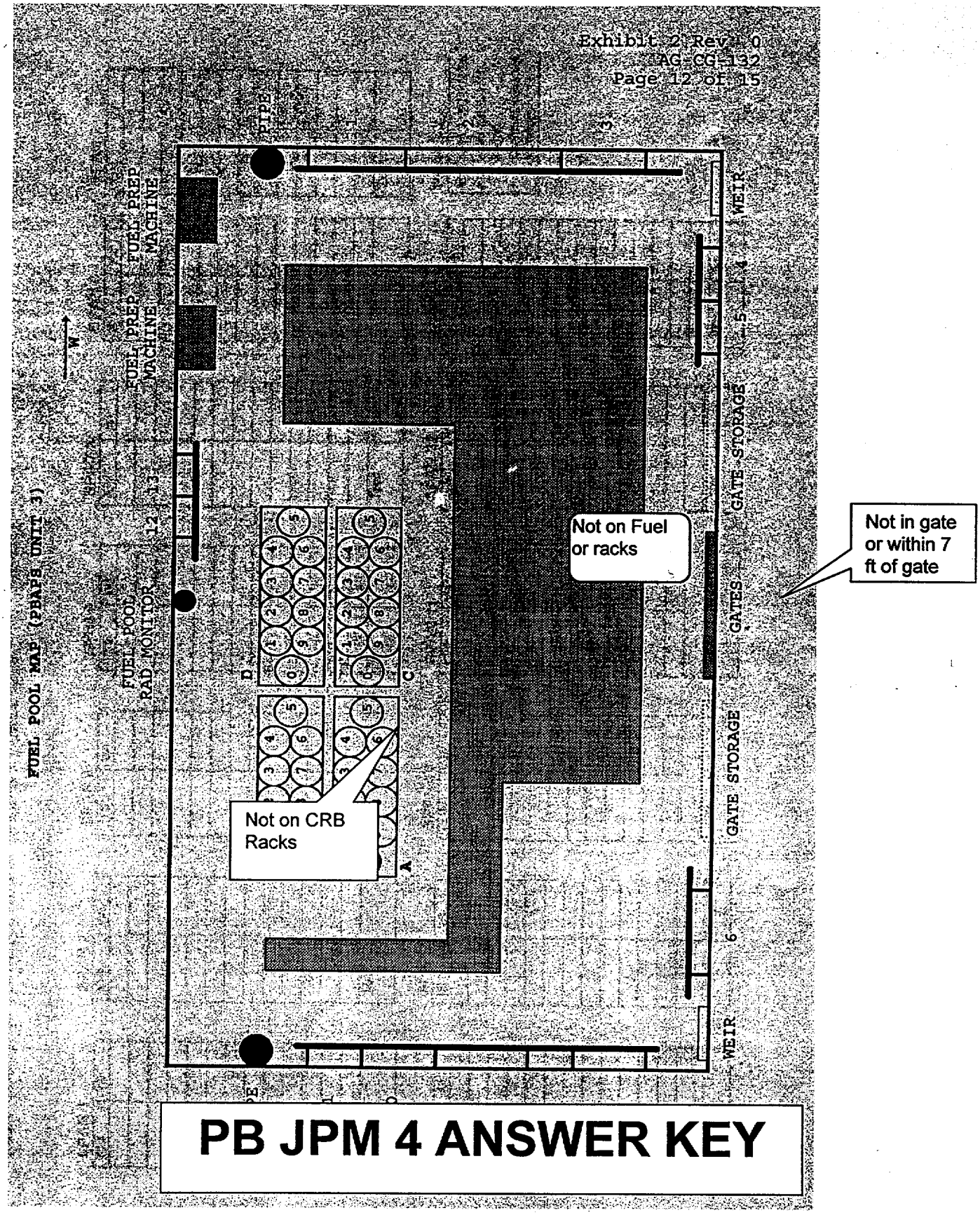

PB JPM 4 ANSWER KEY

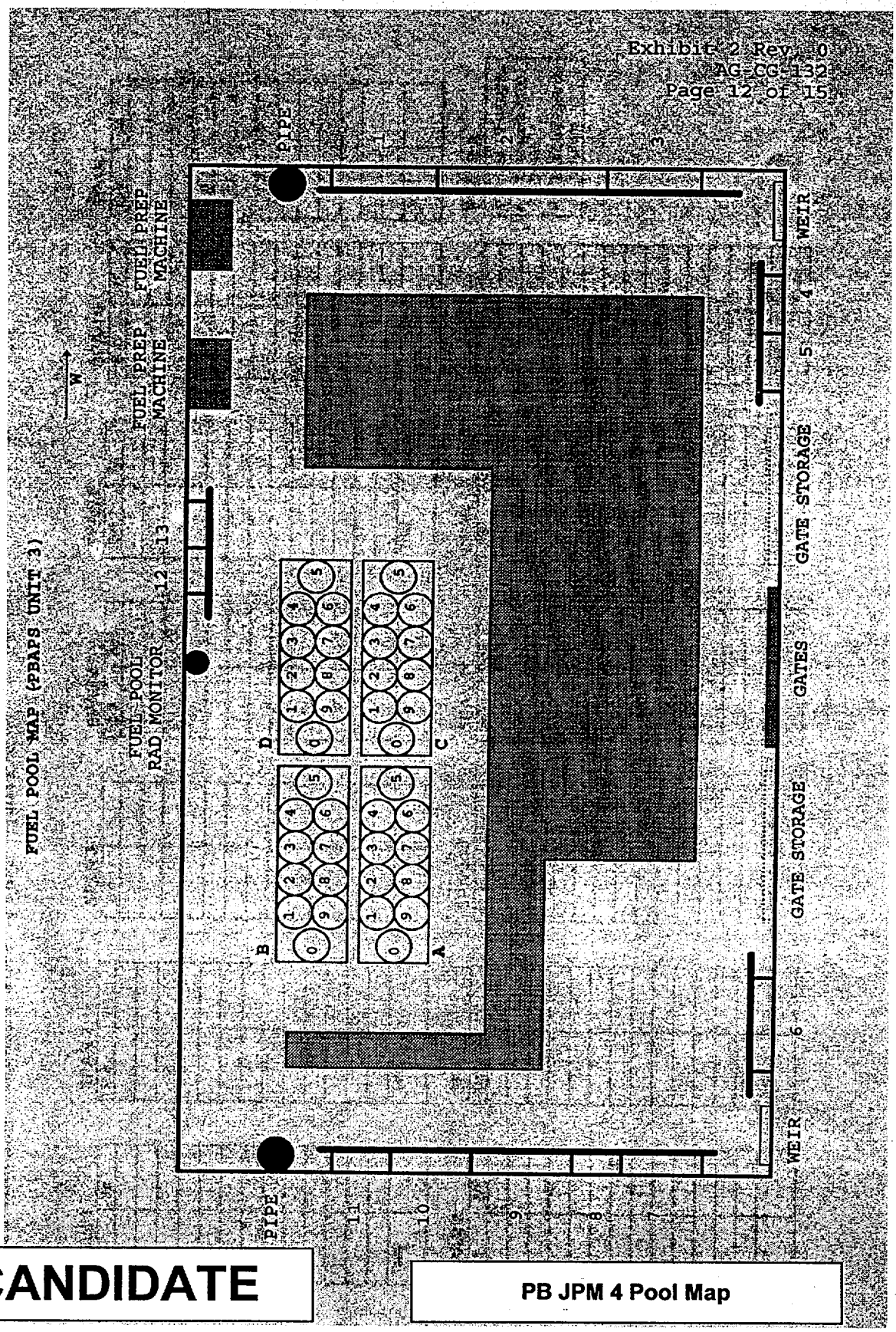

CANDIDATE

PB JPM 4 Pool Map

POOL MATERIAL LOG: STATION & UNIT PBAPS U3 Page____ of ____

NOTE: Radiological information should be entered for all items expected to exceed 1000 mr/hr on contact based on historical or current survey data.

Radiological information shall only be entered by qualified RP personnel.

ID #	Spent Fuel Pool Material Coordinator approval for relocation req'd *	DESCRIPTION Include type of nuclear instrument and core location removed from.	ORIGINAL DATE STORED	LOCKED or RELEASED to pool floor or rack (Yes or No)	RADIOLOGICAL INFORMATION

* To be filled in by Spent Fuel Pool Material Coordinator

Communicate changes to: _____ **ext.**_____ (aspen or written memo or e-mail acceptable).

CANDIDATE

POOL MATERIAL LOG: STATION & UNIT PBAPS U3 Page____ of ____

NOTE: Radiological information should be entered for all items expected to exceed 1000 mr/hr on contact based on historical or current survey data. Radiological information shall only be entered by qualified RP personnel.

ID #	Spent Fuel Pool Material Coordinator approval for relocation req'd *	DESCRIPTION Include type of nuclear instrument and core location removed from.	ORIGINAL DATE STORED	LOCKED or RELEASED to pool floor or rack (Yes or No)	RADIOLOGICAL INFORMATION
UFV-260-1		Underwater vacuum	Today	Yes	7500 mRem/hr on contact

ANSWER KEY

* To be filled in by Spent Fuel Pool Material Coordinator

Communicate changes to: _____ **ext.**_____ (aspen or written memo or e-mail acceptable).

	LGS	PB
S/R	YES	YES
EQ	YES	YES
50.59	YES	YES

Exelon Nuclear

UNDERWATER VACUUM UNIT AND FILTER UNIT EXAMINATION, MAINTENANCE AND OPERATION

1.0 **PURPOSE**

1.1 This procedure provides instructions for pre-operational examination and maintenance, operation and filter replacement for the Tri-Nuclear Underwater Vacuum Unit (UFV-260) and Filter Unit (UFV-600).

1.2 Section 5.0 of this procedure has been divided into the following subsections:

5.1 Examination and Maintenance of Underwater Vacuum Unit and Filter Unit
5.2 Operation of Vacuum Unit or Filter Unit
5.3 Vacuum Unit Filter Replacement
5.4 Filter Unit Filter Replacement

2.0 **APPARATUS AND SPECIAL EQUIPMENT**

NOTE: The following list of tools and equipment are recommended for use in the performance of this procedure and may be substituted with equivalent items, except as noted.

2.1 Tools and Equipment

2.1.1 L-Hook

2.1.2 J-Hook

2.1.3 Handling Poles

2.1.4 Underwater camera and TV monitor

2.1.5 Tri-Nuclear Corp. rope filter lift tool (ref attachment 3)

2.2 Materials

NOTES: Except as noted, materials may be substituted with approved equivalent items as approved by Reactor Services Technical Staff (RSTS).

Replacement parts that are not "Identical Items" shall be approved and documented by Engineering prior to installation.

2.2.1 Filter, 0.3, 1.0, 5.0, or 10.0 micron

2.2.2 Spare flow meter for the UVF-260 and UVF-600

2.2.3 Tape approved for underwater use (A-C-96 class 1)

3.0 PRECAUTIONS AND LIMITATIONS

3.1 Precautions

3.1.1 Components and filters may be highly contaminated. Hot particles may exist. A radiologically controlled area shall be established for removal of pump, hose or associated equipment from cavity or fuel pool water.

3.1.2 Items shall NOT be removed from the Spent Fuel Pool, Reactor Cavity, Steam Dryer/Separator equipment pool or Cask Washdown/Storage area unless Health Physics is present.

3.1.3 A radiation survey shall be performed when removing any item from below water surface of Spent Fuel Pool, Reactor Cavity, Equipment Pool, or the Cask Pit area.

3.1.4 Items removed from below the water line should be kept wet or bagged in order to reduce the possibility of airborne contamination.

3.1.5 Vacuuming with open ended hose should only be performed in areas which are free of large solid objects. Large solid objects have a high potential of clogging the hose. These objects have the ability to create extremely high dose rates in the hose.

3.1.6 Vacuum units can tip over if hose is pulled excessively. Use caution to ensure vacuum units do not tip. Tipping can lead to damage to adjacent structures and elevated dose rates in adjacent areas such as the drywell.

3.1.7 Movement of underwater vacuum unit or filter unit must be performed with extreme care to avoid interferences with surrounding structures or entanglement of hose.

3.1.8 The flowmeter dial read-out gage is a delicate instrument and should be protected from rough handling.

3.1.9 Debris or foreign material introduced into Reactor Cavity, Fuel Pool, Equipment Pit, or the Cask Pit has the potential to become a future radiological hazard or cause equipment or fuel damage. Extreme care shall be exercised in maintaining cleanliness and foreign material exclusion.

3.2 Limitations

3.2.1 All hardware and fasteners must be positively secured with lockwire, Loctite, tackwelds, cotter pins, or other approved method to prevent any part from dropping into RPV, Fuel Pool, Equipment Pool, or the Cask wash down area per A-C-130.

3.2.2 If a filter is dropped during movement over the seal plate, notify Health Physics technician immediately for proper coordination with the drywell control point, as required.

3.2.3 All signoffs and data blanks NOT required should be marked N/A to indicate the steps have NOT been missed unintentionally.

3.2.4 Verifications have been established and shall be implemented in accordance with (IAW) A-C-33.

3.2.5 Subsections of Section 5.0 may be performed out of sequence or in parallel to suit field conditions per the discretion of the Job Leader.

3.2.6 During movement of Overhead Crane, the designated rigger and crane operator shall be in voice contact using wireless communications whenever line of sight communication is not possible.

3.2.7 When disassembling components, matchmark, tag, or otherwise identify all parts not previously identified. Provide separate marked containers for all small parts.

3.2.8 Maintenance Supervision shall be notified immediately of abnormal conditions. Abnormal conditions and corrective actions taken shall be documented in the Remarks Section of the MT.

3.2.9 All verifications require initials and date.

4.0 **PREREQUISITES**

4.1 **ENSURE** all materials, tools, and equipment identified in Section 2.0 and on Attachment 3 are available, as required.

_____ WV

4.2 **RECORD** Work Order number. WO#: _____

_____ WV

4.3 IF planning to perform vacuum unit operation and underwater vacuum or filter unit is located in the Reactor Cavity, THEN **VERIFY** it is installed on a stand OR it is not in direct contact with the seal plate (area inside drywell head flange). IF vacuum or filter unit is in direct contact with seal plate, THEN **VERIFY** Health Physics has radiation monitoring instruments appropriately positioned to detect potential dose rate changes during unit operation as required.

_____ WV

4.4 IF planning to perform vacuum unit operation, visually **VERIFY** area to be vacuumed is free of large solid objects. IF large solid objects are detected THEN **CONSIDER** other means of debris removal (e.g. pliers, electromagnets, etc.). IF large solid objects are noted OR area can not be inspected, THEN **ENSURE** end of hose is outfitted with a coarse screen or strainer to preclude objects from entering hose. For operation with screen on hose, THEN **CONSIDER** staging debris bucket in work area to deposit objects from end of hose.

_____ WV

4.5 IF planning to conduct work activities in the spent fuel pool or cask pit (LGS), THEN **INFORM** Main Control Room Shift Supervision personnel of intent to perform work.

_____ WV

4.6 IF performing filter change outs in reactor cavity, THEN **NOTIFY** drywell health physics technicians of the potential of dropping filters on the cavity seal plate raising the dose rates of the upper elevations of the drywell.

_____ WV

4.7

LIMERICK

IF planning to transport the UFV 260 or UFV 600 over fuel **ENSURE** Refueling Area Secondary Containment is established unless an engineering evaluation is performed in accordance with PECO Calculation LM-033.

_____
WV

PEACH BOTTOM

This step does **NOT** apply.

4.8

LIMERICK

This step does NOT apply.

PEACH BOTTOM

4.8.1 IF handling an Underwater vacuum UFV 260 or Underwater filtration unit UFV 600 over irradiated fuel, THEN verify the following systems are in compliance with the requirements of their respective Tech Spec or TRM sections, unless an analysis has been performed justifying otherwise.

1. Secondary containment, the secondary containment isolation valves, and applicable secondary containment isolation instrumentation are in compliance with the requirements of Tech Spec 3.3.6.2, 3.6.4.1 AND 3.6.4.2. At least one Reactor Building and Refuel Floor ventilation exhaust fan must be in service to ensure rad monitor function.

2. Standby Gas Treatment system per TS 3.6.4.3.

3. Main Control Room Emergency Ventilation system and instrumentation requirements per TS 3.3.7.1, 3.7.4 and TRMS 3.4.

4. Electric power requirements and electric power instrumentation requirements per TS 3.3.8.1, 3.8.2, 3.8.3, 3.8.5, 3.8.6 and 3.8.8.

5. Spent Fuel Pool Water Level greater than or equal to 232 ft 3 inches plant elevation per TS 3.7.7. (Only required within the spent fuel pool)

6. Reactor pressure vessel water level greater than or equal to 458 inches above RPV instrument zero per TS 3.9.6 (only required when handling the load within the RPV).

4.9 **ENSURE** pre-job briefing is complete.

4.10 **INITIAL** AND **DATE** indicating Precautions and Limitation read and understood and Prerequisites have been satisfied.

_____
LMT

5.0 **PROCEDURE**

> **WARNING**
>
> The equipment described in this procedure is subject to varying degrees of radiological contamination.

5.1 Examination and Maintenance of Underwater Vacuum Unit and Filter Unit

Subsection Required: YES___ NO___ _____
WV

5.1.1 Visually **EXAMINE** power supply cord and control cables (using TV and monitor, if required) for signs of cuts, cracks or overheating.

1. IF any exist, **RECORD** in remarks section AND **CONTACT** Maintenance Supervision immediately for disposition.

5.1.2 **EXAMINE** control box and flow meter for damage, deformation or cracking.

1. IF any exist, **RECORD** in remarks section AND **CONTACT** Maintenance Supervision immediately for disposition.

5.1.3 **ENSURE** all electrical connections on the flow indicator and control box are clean and intact and not degraded.

5.1.4 Visually **EXAMINE** pump suction hose for damage or deformation.

WARNING

Vacuum hoses have the potential for containing high radiation sources or hot particles.

5.1.5 IF Hose replacement is required THEN **PERFORM** the following:

1. **ENSURE** Health Physics has performed underwater survey of hose as required.

2. **ESTABLISH** appropriate work area controls to minimize spread of contamination.

3. **REPLACE** hose AND **RECORD** in remark section.

NOTE: Vacuum units have two suction ports. Normal set-up is to have hose attached to one port and have second port blocked to ensure all suction is applied to hose.

5.1.6 **ENSURE** vacuum unit second suction port is blocked OR is configured appropriately for planned work activity.

5.1.7 **INSTALL** filters in units in accordance with subsection 5.3 for UFV 260 and subsection 5.4 for UFV 600 as required.

5.1.8 **INSPECT** pump using Underwater TV camera to ensure the pump is seated correctly on the pump casing. Also, **ENSURE** the covers are closed over the filters housings (vacuum unit only) AND that the suction hose is not kinked (vacuum unit only).

NOTE: IF pump operates for several minutes and then trips, this indicates pump is phased backwards.

> **WARNING**
>
> The following step requires work inside the control panel. Utilize extreme care, appropriate protective devices and self check practices to ensure safety.

DOUBLE VERIFICATION

5.1.9 **PERFORM** motor phase check AND **SET** flow meter as follows:

1. **TURN ON** vacuum or filter unit AND **NOTE** flow rate.
2. **DE-ENERGIZE** unit and **VERIFY** no flow rate observed.
3. **REVERSE** two motor leads at starter box to reverse motor phase and rotation.
4. **RESTART** vacuum or filter unit AND **NOTE** flow rate.
5. **DE-ENERGIZE** unit as required, AND **INSTALL** motor leads to configuration that provides highest flow rate.
6. **OPERATE** unit AND **SET** flow meter to read nominally 260 gpm for vacuum unit OR 600 gpm for filter unit.

_____	_____
WV	DV

5.1.10 At completion of exam, **ENSURE** vacuum hose is not directly laying on fuel stored in pool AND **ENSURE** hose is routed as neatly as practical.

5.2 Operation of Vacuum Unit or Filter Unit

5.2.1 **CONTACT** Health Physics technician AND **ENSURE** planned activities are discussed and appropriate briefings and precautions are in place.

NOTE: Hose must be filled with water. Air bound hoses will prevent proper vacuum operation.

5.2.2 IF performing vacuum unit operation, THEN **ENSURE** hose is full of water.

5.2.3 IF performing vacuum unit operation, **ATTACH** vacuum head, vacuum nozzle or screen/strainer (reference Prerequisite 4.4) to end of hose as required.

NOTE: To reduce radwaste generation, use of tape should be minimized. If needed however, ensure that each piece of tape used is sufficiently long to prevent loss in pool. General recommendation is to ensure that tape wraps around hose and pole a minimum of 5 times to provide a secure connection.

5.2.4 IF performing vacuum unit operation, **SECURE** hose to light weight poles as required to keep hose away from obstacles in work area using approved class 1 tape.

NOTE: Hose will move (jerk) some when Vacuum unit is energized.

> **WARNING**
>
> Dose rates on filter should be closely monitored while vacuum cleaning , since high dose rates may be reached before the filter shows a significant loss of flow.
>
> Vacuuming of large/solid hardware without a strainer on hose will likely lead to clogged hose and Hot spots. HP should be notified immediately if it is suspected that a large solid object entered vacuum hose.

5.2.5 WHILE holding vacuum pole/hose, **ENERGIZE** vacuum by depressing START on control panel.

> **WARNING**
>
> Vacuum hoses at the surface of water during debris retrieval poses a potential radiation hazard.

5.2.6 **ENSURE** vacuum hose is submerged.

5.2.7 **PERFORM** vacuum cleaning operations as required by directing end of hose to location of debris.

5.2.8 **OBSERVE** initial vacuum unit flow rate indication AND **CONSIDER** recording rate in log or CREM for later assessments of filter change out timing.

5.2.9 At completion of vacuum operation, **ENSURE** vacuum hose is not directly laying on fuel stored in pool AND **ENSURE** hose is routed as neatly as practical.

NOTE: UFV-600 unit may be operated without hoses on pump discharge tee. When operating filter unit in reactor cavity, the recommended orientation of tee is parallel with reactor cavity wall so that surface ripples are minimized.

5.2.10 IF operation of UFV-600 filter unit is necessary, THEN **PERFORM** the following:

1. **ENSURE** power cord, flow meter cord and any nearby hoses or ropes are not directly in path of discharge flow.

2. **ORIENT** discharge tee to minimize water surface turbulence as required.

3. **ENERGIZE** filter unit by depressing START on control panel.

4. **OBSERVE** initial flow rate indication AND **CONSIDER** recording rate in log or CREM for later assessments of filter change out timing.

NOTE: Filters should be replaced if flow rate is less than 60% of original flow rate with new filter or dose rate is greater than 50 R/hr on contact underwater.

5.2.11 During operation of vacuum OR filter unit, periodically **CHECK** flowrate AND **REPLACE** filters as required in accordance with subsection 5.3 OR subsection 5.4 as required.

5.2.12 **INITIAL** AND **DATE** indicating subsection complete._____
WV

5.3 Vacuum Unit Filter Replacement

Subsection Required: YES___ NO___ _____
WV

WARNING

IF a filter is dropped while working over the cavity seal plate **HIGH** dose rates in the upper elevations of the drywell may result.

5.3.1 **CONTACT** health physics technician of pending filter movement for coordination with the drywell control point, as required.

5.3.2 **POSITION** vacuum unit in a secure and accessible location.

5.3.3 Using handling poles and L hook, J-hook, or rope filter lift tool, **LIFT** lid from vacuum filter canister.

5.3.4 Using filter removal tool or equivalent, **REMOVE** used filter.

5.3.5 **STORE** used filters per HP instructions and instructions of A-C-132.

5.3.6 Using L or J-hook or the rope filter lift tool, **PICK UP** new filter AND slowly **LOWER** filter into vacuum filter canister.

5.3.7 Using L-hook, J-hook, or rope filter lift tool, **CLOSE** lid on vacuum filter canister.

5.3.8 **REPEAT** Steps 5.3.3 through 5.3.7 to replace other filter, if required.

5.3.9 **INITIAL** AND **DATE** indicating subsection complete._____
WV

5.4 Filter Unit Filter Replacement

Subsection Required: YES___ NO___ _____
WV

WARNING

IF a filter is dropped while working over the cavity seal plate **HIGH** dose rates in the upper elevations of the drywell may result.

5.4.1 **CONTACT** health physics technician of pending filter movement for coordination with the drywell control point, as required.

5.4.2 **POSITION** refuel bridge or auxiliary platform over vacuum unit in a secure and accessible location, if required.

5.4.3 Using handling poles and L hook, J-hook, or rope filter lift tool, **LIFT** filter hold down rod from horizontal position to vertical position on top of vacuum filter canister.

5.4.4 Using filter removal tool, **GAIN** access AND **REMOVE** used filter.

5.4.5 **STORE** used filters per HP instructions and instructions of A-C-132.

5.4.6 Using L hook, J-hook, or rope filter lift tool, **PICKUP** new filter AND slowly **LOWER** into vacuum filter canister.

5.4.7 Using L, J-hook, or rope filter lift tool, **CLOSE** filter hold down rod to horizontal position over vacuum filter canister.

5.4.8 **REPEAT** Steps 5.4.3 through 5.4.7 to replace other filter, if required.

5.4.9 **INITIAL** AND **DATE** indicating subsection complete._____
WV

6.0 **RETURN TO NORMAL**

6.1 **ENSURE** the following:

- Tools and equipment are returned to designated storage location and work area is clean.
- M&TE numbers, date used, and out of cal dates are recorded in WO.
- Name and initials of each person who initialed procedure steps are entered on last page of this procedure.
- Procedure is complete and attached to WO.

_____
LMT

7.0 **REFERENCES**

7.1 Vendor/Technical Manuals

7.1.1 Tri-Nuclear Corp. PR022, Assembly and Operating Instructions Underwater Filter/Vacuum Units (Models UFV-600 and UFV-260)

7.1.2 A-C-130, Fuel Floor Foreign Material Exclusion

7.1.3 A-C-132, Spent Fuel Pool Material Storage/Inventory and Housekeeping

7.2 Plant Procedures and Miscellaneous

7.2.1 HP-C-216, Removing items from the spent fuel pools, reactor cavity, equipment pit, and cask wash down pit.

7.2.2 PEP I0011472, ARM alarmed during FF work causing OPS to enter ON-124 & T-103

8.0 **ATTACHMENTS**

8.1 Attachment 1, UFV-600 Underwater Vacuum

8.2 Attachment 2, UFV-260 Underwater Vacuum

8.3 Attachment 3, UFV Unit Accessories

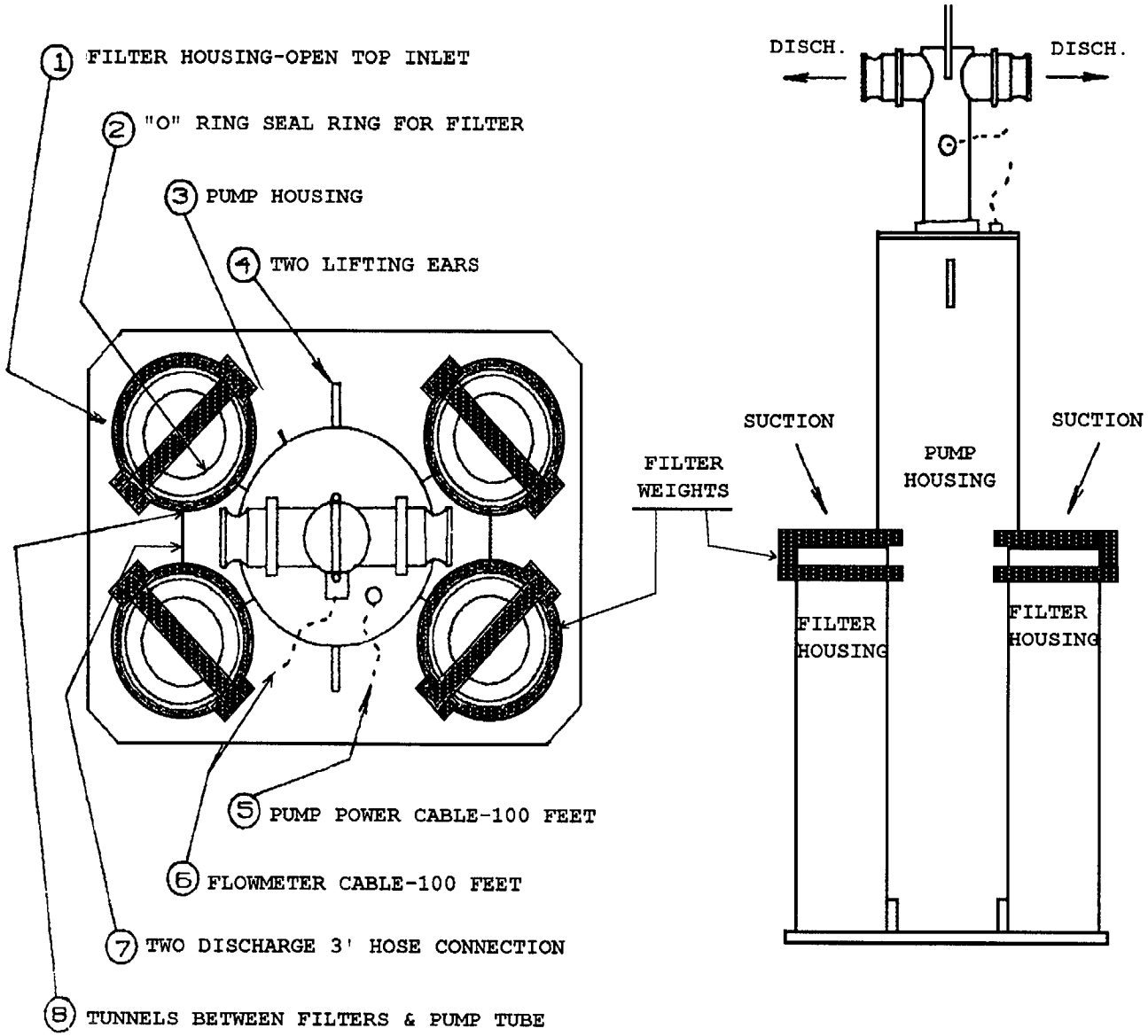

TOTAL WEIGHT 500 LBS
OVERALL HEIGHT 88 "
BASE 24' x 30'

UFV-600 UNDERWATER FILTER/VACUUM

UFV-260 UNDERWATER FILTER/VACUUM UNIT

TOTAL SIZE 18" X 24" X 70"
EMPTY WT. 250 LBS.
FULL OF WATER 465 LBS.
MATERIAL 304 STAINLESS

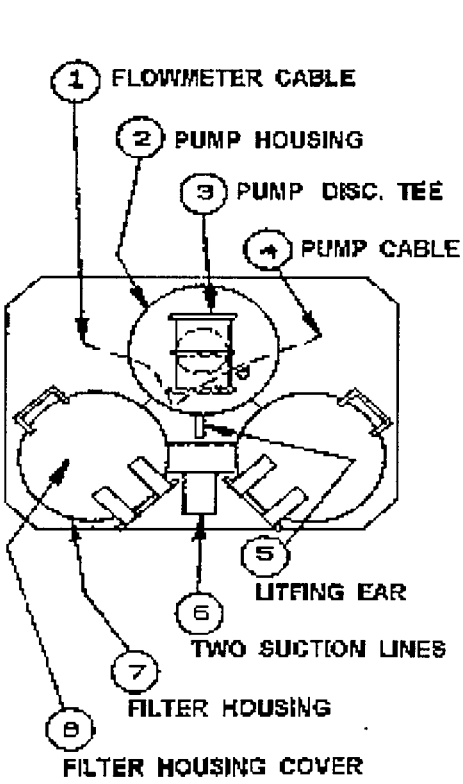

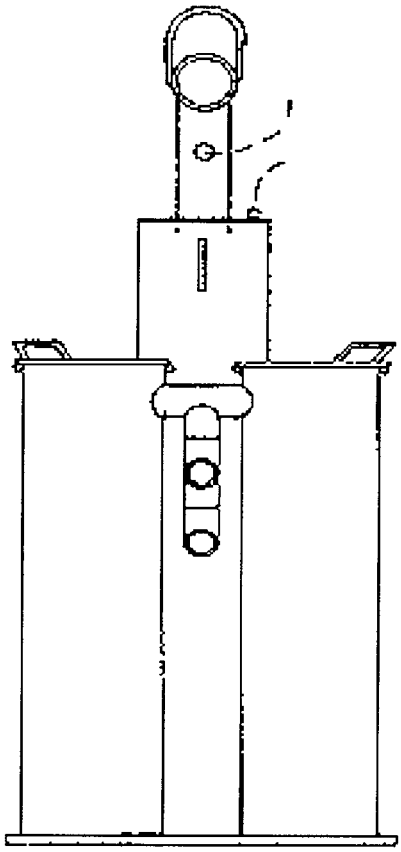

UFV UNIT ACCESSORIES

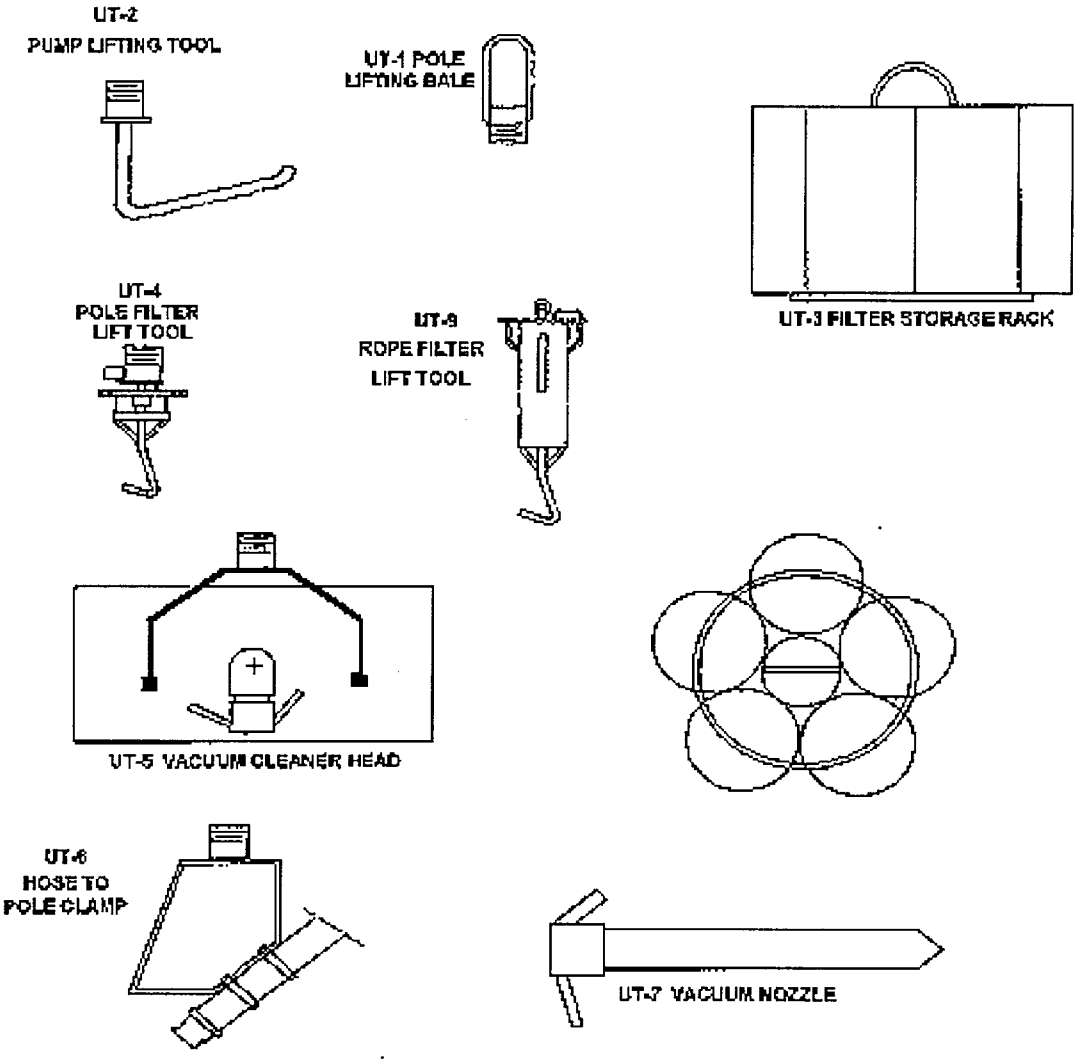

PRINTED NAME	SIGNATURE	INITIALS

REMARKS

Effective Date:_____

Transition Concurrence: R.C. Braun /_____
Type Sign

PORC	YES
SQR	YES
QR	NO
50.59	YES
RESP MGR	YES

PECO Nuclear

SPENT FUEL POOL MATERIAL STORAGE/INVENTORY AND HOUSEKEEPING

1.0 PURPOSE

1.1 To ensure that items are stored in the Fuel Pools and LGS Cask Pit safely to minimize potential for: excessive personnel exposure, damage to fuel or pool structures or components, water chemistry problems and excessive radwaste generation.

1.2 To provide controls to maintain an accurate inventory of radwaste materials and components stored in the Fuel Pools or LGS Cask Pit. This enhances safety by permitting identification of items stored in the pools, facilitates radwaste disposal and provides a means to control and track location of items such as vessel specimens for subsequent processing or analysis.

1.3 To specify housekeeping standards for the Fuel Pools and LGS Cask Pit.

1.4 To establish controls to periodically inspect the Fuel Pool or LGS Cask Pit to ensure continued compliance with housekeeping standards.

2.0 SCOPE

2.1 This procedure applies to the Interim Storage and Long Term Storage (ref. 4.0) of items within the Spent Fuel Pools and LGS Cask pit. This includes but is not limited to:

- Radwaste items such as scrap fuel assembly parts, fuel channels, spent nuclear instruments, vacuum filters, vacuum hose and shroud head bolts.
- Radioactive components intended for reinstallation or subsequent analysis such as fuel assembly parts, vessel specimens, fuel supports and jet pump assemblies.

- Refueling service tools such as pool lights, vacuums, handling poles, filter change out tools, grapples and empty storage containers.

2.2 This procedure provides specific limitations for use of the Fuel Preparation Machine for temporary storage of fuel assemblies during on-going work activities.

2.3 This procedure does NOT provide controls for the handling/movement of items to or from its storage location in the Fuel Pool or LGS Cask Pit.

3.0 SOURCES AND REFERENCES

3.1 SOURCE DOCUMENTS

3.1.1 CM-1, NRC Info Notice No. 90-33 (T00987)

3.1.2 CM-2, PBAPS Inspection Report No. 92-27/27 (T02685)

3.1.3 EWR-A0594796 (PBAPS)- Evaluation of pool storage hook designs

3.1.4 EWR-A0395821 (PBAPS)- Wire rope requirements

3.1.5 Nuclear Engineering Department Calculation PS-097 - Maximum Loading on the PBAPS Fuel Pool Storage Rails.

3.1.6 PIMS AR A1158987, A1159331, PECO response to INPO OE8834 - "Problems associated with irradiated fuel inspection activities"

3.1.7 LGS PORC meeting 92-141, Performing CRB and CRD maintenance in parallel during a fuel shuffle outage

3.1.8 PEP I0007582, RPV Flux Wire Specimen Lost

3.1.9 PEP I0007895, Item Suspended form Pool Handrail Exceeded Allowable Dose Rate

3.1.10 LGS Updated Final Safety Analysis Report section 9.1.2.3.2.5 "Summary and Conclusions - High Density Spent Fuel Storage Racks".

3.1.11 LGS ECR LG-98-00355, Liquid and Solid Waste Management Systems

3.2 CROSS REFERENCES

3.2.1 A-C-130, Fuel Floor Foreign Material Exclusion

3.2.2 AG-CG-132, Spent Fuel Pool Inventory / Inspection

3.2.3 MAG-CG-306, Certification of Portable Hoists, Slings and Associated Rigging Hardware

3.2.4 M-C-700-332, Rigging and Handling of Heavy Loads

3.2.5 A-C-26, Administrative Controls for Processing Work Orders

3.2.6 FH-105, (LGS) Core Component Movement - Core Transfers

3.2.7 FH-106, (LGS) Core Component and Irradiated Item Movement - No Core Transfer

3.2.8 FH-6C, (PBAPS) Core Component Movement - Core Transfers

3.2.9 FH-35, (PBAPS) Control of Material Movement in the Fuel Pool

3.2.10 A-44, (LGS) Procedure for Special Nuclear Material Accounting

3.2.11 A-44, (PBAPS) Special Nuclear Material Accounting

3.2.12 Recurring Task (RT) Work Orders for performance of Fuel Pool Inspections: LGS R0587848; PBAPS unit 3: R0721713; PBAPS unit 2: R0721711.

4.0 DEFINITIONS

4.1 **DEGRADABLE MATERIALS** - Items composed of plastics, fabrics, or synthetic materials which tend to degrade over time when stored underwater and/or exposed to radiation. Examples are filters, non-metallic hoses and synthetic rope.

4.2 **LIGHT WEIGHT SERVICE TOOL** - Tools which are supported by hand. This is intended to apply to tools which weigh approximately 50 lbs and less, e.g. small grapples, a section of light weight handling pole, etc.

4.3 **INTERIM STORAGE** - Storage of items for a temporary time period under the direction / control of other procedures. Examples are: temporary storage of a fuel support via a core component transfer authorization (CCTAS) which requires the reinstallation of the fuel support in the vessel.

4.4 **POOL MATERIAL LOG** - A listing of all materials, tools and equipment, within the scope of this procedure, which are stored in the Fuel Pool or LGS Cask Pit. Pool Material Log includes a simplified map of Fuel Pool or Cask Pit onto which workers label the location of items. (ref. 3.2.2)

4.5 **POOL STORAGE RAILS** - Pipe sections attached to pool wall liner just above the water surface for suspending items in the pool.

4.6 **LONG TERM STORAGE** - The act of placing items underwater in the Fuel Pool or Cask pit at the conclusion of work activities (i.e. work order activity "COMPLT" status) for safe deposit until material can be safely removed from the pool, reinstalled in the reactor or used for assembly of a component.

4.7 **SPECIAL NUCLEAR MATERIAL (SNM)** - Materials containing Plutonium or enriched Uranium as specified in 10 CFR Parts 70 and 74 and includes: Fuel, SRMs, IRMs, LPRMs, WRNMs, Traversing In-Core Probes (TIPs) containing Uranium, Fission Chambers, Fuel Loading Chambers(dunking chambers).

4.8 **UNIQUE STORAGE HARDWARE** - Hardware such as metal containers designed by PECO Nuclear Site Engineering Civil / Structural Branch, Nuclear Maintenance RSS, or vendors which does not match any classification of hardware listed in plant procedures for certification and load testing of rigging hardware.

5.0 RESPONSIBILITY AND AUTHORITY

5.1 **ALL WORKERS** - Use work practices that minimize the potential for introduction of items into the pool; store items in the pool in accordance with requirements contained herein; notify Maintenance Supervisor NMD-RSS if housekeeping standards have been compromised or could not be met; assist in restoring or enhancing Fuel Pools or LGS Cask Pit to housekeeping standards; update Pool Material Log and Rail Loading Tracking Sheet as required. (ref. 3.2.2)

5.2 **DIRECTOR NUCLEAR MAINTENANCE DIVISION (NMD)** - Oversee the implementation of this procedure.

5.3 **MANAGER REACTOR SERVICES SECTION (RSS)** - Establish maintenance activities for periodic pool inspection and determine need for additional inspections as required; assign a Spent Fuel Pool Material Coordinator; review pool clean-out and material consolidation plans proposed by the Spent Fuel Pool Material Coordinator.

5.4 **MAINTENANCE SUPERVISOR-NMD-RSS** - Ensure that Pool Storage Rails or handrails or containers are not overloaded; ensure adequacy of small containers for intended use; initiate corrective actions for unsatisfactory Fuel Pool inspection results, monitor performance of work activities to ensure compliance with standards as required.

5.5 **SPENT FUEL POOL MATERIAL COORDINATOR** - Individual designated by the Manager Reactor Services Section who has responsibility to: maintain a record of items stored within the pool; maintain accuracy of Pool Material Log and Rail Loading Tracking Sheet; evaluate needs for fuel pool clean-out activities.

5.6 **RADIATION PROTECTION SUPERVISOR** - Determine radiological condition of material/tools within the pool at the conclusion of work activities and determine whether radiological conditions warrant storage of item underwater; ensure appropriate radiological controls, including postings, are in place during and after storage of items; evaluate the locked status of materials during performance of Fuel Pool Inspection; implement appropriate actions to lock material/tools as required.

5.7 **SITE ENGINEERING, CIVIL/STRUCTURAL BRANCH** - Review and approve or generate design of Unique Storage Hardware as required; determine load test requirements for Unique Storage Hardware; review and approve storage of items on top of or inside fuel or CRB storage racks as required.

5.8 **SITE ENGINEERING, REACTOR ENGINEERING** - Evaluate storage of items on top of or inside fuel or CRB storage racks as required; control the on-site administration of Special Nuclear Material Accounting (SNM).

5.9 **MANAGER RADWASTE** - Evaluate storage of non-routine items and review pool housekeeping and inventory information made available by Spent Fuel Pool Material Coordinator for input to pool clean-out project planning.

5.10 **MANAGER RADIATION PROTECTION** - Review pool clean-out and material consolidation plans proposed by the Spent Fuel Pool Material Coordinator.

6.0 PREREQUISITES

6.1 Radiation Protection coverage is required for removing or installing items in the Fuel Pool or LGS Cask Pit.

6.2 Manager Radwaste or designee should be consulted prior to storage of non-routine items in pools to evaluate potential impact to pool clean-out projects.

6.3 Reactor Engineering shall be contacted prior to storing, removing, or relocating Special Nuclear Material (SNM).

7.0 PROCEDURE

7.1 HOUSEKEEPING STANDARDS AND GENERAL MATERIAL STORAGE GUIDELINES

7.1.1 Corrective actions shall be initiated IAW A-C-26 if the following Housekeeping Standards are not met:

1. Refueling service tools, e.g. grapples, handling poles and fuel servicing equipment shall not be stored in the pools at the conclusion of work activities unless Radiation Protection personnel require storage of tool(s) underwater.

2. Radwaste materials shall not be stored Long Term suspended from pool handrails.

NOTE:

Procedure A-C-130 "Fuel Floor Foreign Material Exclusion" ensures a detailed inspection of tops of fuel is performed prior to reloading fuel in the reactor.

3. The tops of fuel assemblies and blade guides shall be free of obvious foreign objects or debris.

4. Visible floor areas of LGS Cask Pit and the PBAPS cask areas shall be free of build-up of crud, corrosion or foreign material. This will minimize the potential for migration of debris since refueling service tools and casks are placed in these areas.

5. LGS Cask Pit canals leading to Fuel Pools shall be free of build-up of crud, corrosion or foreign material. This will minimize potential for gate seal degradation or leakage should gates need to be installed and Cask Pit drained.

6. Spent Fuel Racks shall be clearly labeled with no build-up of crud, corrosion or foreign material.

7. Materials stored in the pools shall be free of signs of deterioration and shall be stored in an orderly manner. Cables shall not be tangled / twisted around adjacent items.

8. Hoses attached to vacuums or filter units, or stored as radwaste shall not lay directly on fuel or control rod blades (CRBs).

9. Fuel pools and LGS Cask Pit shall remain illuminated in order to assist with identification of foreign material or non-conforming conditions.

7.1.2 Consider the following guidelines when planning for the storage of material in the pools:

1. Storage of items above spent fuel shall be minimized.

2. Bulk storage of numerous similar items in a single container making future accounting of individual parts not possible or impractical shall be minimized.

3. Containers should not be filled beyond approximately 3/4 of container's capacity when storing numerous small or loose items.

4. Filters from underwater vacuums and filter units should be stored in containers which hold multiple (e.g. 12 or more) filters. This will minimize material handling and avoid the unnecessary generation of excessive storage hardware.

7.2 WORK CONTROL REQUIREMENTS

NOTE:

Radiation Protection coverage is required for removing or installing items in the Fuel Pool or LGS Cask Pit. Section 7.2 shall not preclude the prompt return of material to a safe / secure condition under the direction and coverage of qualified Radiation Protection personnel.

7.2.1 Storage, movement or relocation of items identified in Section 2.1 shall be performed in accordance with job specific approved procedures or a work order activity IAW A-C-26. Procedures or work order activities governing changes in fuel pool inventory, need not detail the specifics for movement or storage of item(s), so long as they are performed IAW this procedure. This control is necessary to ensure aspects such as radiological safety, plant conditions, SNM accounting, Technical Specification Surveillance Requirements and impact to pool clean-out projects are reviewed.

1. Spent Fuel Pool Material Coordinator shall authorize the movement of items as indicated by Coordinator on the Pool Material Log. This control mechanism is to ensure that items important for compliance with Technical Specifications or UFSAR requirements, such as Reactor Vessel Material Surveillance Specimens, are not misplaced (ref. 3.1.8).

7.2.2 Rigging and handling heavy loads shall be performed IAW M-C-700-332, "Rigging and Handling of Heavy Loads".

7.2.3 Movement of Core Components, irradiated or radioactive items shall be performed IAW applicable Fuel Handling (FH) procedures (Reference Section 3.0).

7.2.4 Worker and Maintenance Supervisor NMD-RSS shall ensure loading of PBAPS Pool Storage Rails, loading of pool handrails, or loading of existing storage containers is not exceeded when planning to store material in the pool.

1. Pool Storage Rails at LGS shall NOT be used unless specific approval from Site Engineering, Civil/Structural Branch is obtained and documented in a PIMS AR evaluation.

2. Refer to "PBAPS Pool Rail Loading Tracking Sheet" (ref. 3.2.2) located near Fuel Pool for determination of remaining rail capacity.

3. Loading of pool handrails shall be limited to small, light weight containers, hoses or light weight service tools.

4. Check container labeling, as required, to ensure container rating is not exceeded.

7.3 **STORAGE HARDWARE REQUIREMENTS**

7.3.1 All storage hardware shall have fasteners secured and meet Fuel Floor FME standards IAW A-C-130.

7.3.2 Nylon braided rope may only be used for the storage of light weight service tools, storage of hose or the Interim Storage of light weight radwaste material / containers.

7.3.3 Rigging hardware used to support the weight of items stored within the spent Fuel Pool or LGS Cask Pit shall be load tested and certified IAW MAG-CG-306, "Certification of Portable Hoists, Slings and Associated Rigging Hardware."

7.3.4 Hooks used for storage of items other than light weight service tools or small debris containers shall be considered rigging hardware. As such, design of hooks must be approved by Site Engineering Civil/Structural Branch in a PIMS AR evaluation or be designed and supplied by qualified vendors through approved purchasing procedures.

7.3.5 Small containers, i.e. standard pail sizes approximately 1 ft diameter or 1 ft square for small parts require approval of NMD-RSS Supervisor only (Site Engineering Civil/Structural Branch approval not required).

7.3.6 Design, load rating, and testing requirements for Unique Storage Hardware shall be approved by Site Engineering Civil/Structural Branch in a PIMS AR evaluation.

1. Containers shall be designed to be stable and should have provisions of being off-loaded or up-ended during pool clean-out projects.

2. Containers, except for small containers, intended for multiple applications, shall be labeled with load rating. Labeling may be applied to rigging supporting container.

3. Whenever practical, storage containers should be designed to facilitate a quantitative verification of container contents.

4. Containers for bulk storage of numerous small parts, for example numerous stellite balls from CRBs, should have a cover or other means of securing contents of container to minimize potential for losing material.

7.3.7 Wire rope slings with turned back eyes or lap-splices constructed with wire rope clips or crimped sleeves may only be used for light weight service tools and small debris containers. Existing load tested and accepted rigging constructed with clips or sleeves does not require replacement.

7.3.8 Wire rope and associated rigging hardware shall be stainless steel. Wire rope should be a minimum 3/16 inch diameter, oil free, and uncoated (not sheathed with plastic coating).

7.3.9 Hardware which will be submerged shall not be painted unless specifically approved by Site Engineering Civil/Structural Branch in a PIMS AR evaluation.

7.4 **STORAGE LOCATION LIMITATIONS AND RADIATION PROTECTION REQUIREMENTS**

7.4.1 Storage of items on top of fuel (load bears on fuel) is prohibited.

7.4.2 Fuel assemblies shall not be stored in the Fuel Preparation Machines for extended periods of inactivity as defined in the applicable fuel handling (FH) procedures. (ref. 3.2.6, 3.2.7, 3.2.8, 3.2.9).

7.4.3 Items shall not be stored directly on top of or inside fuel or CRB storage racks unless specific approval from Site Engineering, Civil/Structural Branch and/or Site Reactor Engineering is obtained and documented.

7.4.4 Items stored adjacent to the LGS Spent Fuel racks shall not reduce the horizontal unobstructed space (i.e. water gap) between the fuel rack and the pool wall or any other obstruction to less than calculated fuel rack seismic displacements.

1. For LGS Unit 1, at least 5.5 inches water gap shall be maintained.

2. For LGS Unit 2, a minimum of 1.5 inch water gap shall be maintained.

7.4.5 Nuclear Instruments stored on the wall of the LGS Unit 1 Spent Fuel Pool shall not remain in direct contact with the fuel rack. (ref. 3.1.11).

7.4.6 No items shall be stored between the LGS Special 7x7 storage rack and the spent fuel pool wall unless specific approval from Site Engineering, Civil/Structural Branch is obtained and documented in a PIMS AR evaluation (ref. 3.1.11).

7.4.7 Items shall not be stored in any manner which would interfere with installation or removal of pool gates.

7.4.8 Radioactive materials stored in the Fuel Pool shall be at least seven feet below the water surface.

1. Nuclear Instruments shall be stored such that the detector(s) are positioned at or below the elevation of the top of the fuel storage racks (ref. 3.1.7).

2. Control Rod Blades shall not be stored outside the CRB rack unless an approved job specific procedure is issued for the work activity.

3. Long Term Storage of irradiated items which have been surveyed to be equal to or greater than 1000 R/hr on contact, shall be stored at an elevation equal to or below the top of the fuel storage racks (ref. 3.1.11).

   a. Items equal to or greater than 1000R/hr on contact must be stored, even on an interim basis, at or below the top of the fuel storage racks during CRB exchange in parallel with control rod drive exchange activities (ref. 3.1.7).

7.4.9 Radioactive material that has been surveyed to be equal to or greater than 1000 mr/hr on contact, shall be locked by Radiation Protection when stored within the pool to prevent inadvertent removal from Fuel Pool or Cask Pit.

1. Alternatively, material may be released to Fuel Pool or Cask Pit floor (i.e. no cable remains attached to item) in a location determined acceptable by Radiological Protection group.

2. Irradiated channels stored on an interim basis in the channel rack shall be released from the channeling jib load balancer.

7.4.10 Radioactive material that has been surveyed to be equal to or greater than 1000 mr/hr on contact, shall be a minimum of 7 feet from the fuel pool gate installation location at the refuel slot. This will preclude potential for excessive radiation levels within the refuel slot during personnel occupancy of refuel slot during outages.

7.4.11 Items with potential to float shall be weighted or otherwise secured to prevent them from becoming dislodged from their intended storage location. **CM-1**

7.5 MATERIAL ACCOUNTABILITY - LOG KEEPING REQUIREMENTS

7.5.1 A Pool Material Log shall be maintained in the vicinity of the fuel pools. Log shall be updated by workers as required when items identified in section 2.1 are added to, removed, or relocated in the pools. Reference AG-CG-132 for detailed guidance for log format and log-keeping.

1. Spent Fuel Pool Material Coordinator shall maintain a record of items stored in the pools and identify on the Pool Material Log those items which require authorization of the Coordinator prior to movement of the item.

7.5.2 A PBAPS Pool Rail Loading Tracking Sheet shall be maintained in the vicinity of the PBAPS fuel pools. This sheet shall be up-dated by workers to show new loads added to rail and the current total load for each span of rail. This sheet shall also outline the maximum allowable loads based on Engineering calculations (ref. 3.1.5). Reference AG-CG-132 for detailed guidance for data sheet format and maintenance of sheet.

7.6 FUEL POOL INSPECTION

7.6.1 Once per year and as directed by the Manager of Reactor Services, NMD-RSS shall perform a detailed inspection of the Fuel Pool and LGS Cask Pit to ensure accuracy of Pool Material Log and compliance with storage requirements and housekeeping standards defined herein. Reference AG-CG-132 for detailed guidance for methods to be used to perform inspection. **CM-2**

1. Inspections shall be scheduled and performed IAW a Recurring Task (RT) work order (ref. 3.2.12).

2. Inspection process shall include a verification by Radiation Protection that items stored within the pool are locked as required.

3. A PIMS Library AR Evaluation shall be generated for each inspection period (annual basis) for the Spent Fuel Pool Material Coordinator to review results of pool inspections and inventory and make recommendations to Management for pool clean-out activities or material movement/consolidation to support storage space needs for upcoming refuel outages. Evaluation and proposed pool clean-out/material consolidation plans shall be reviewed by Manager NMD RSS and Manager Radiation Protection prior to implementation.

7.6.2 Maintenance Supervisor NMD-RSS or designee shall initiate corrective actions IAW A-C-26 for any unsatisfactory Fuel Pool Checklist items.

8.0 **DOCUMENTATION**

8.1 Evaluations performed by Engineering as required by this procedure shall be documented in PIMS using the appropriate PIMS document type as determined by Manager Engineering Civil/Structural or designee.

9.0 **EXHIBITS**

None

Transition Concurrence: R. C. Braun / _____
Type Sign

PORC	NO
SQR	YES
QR	NO
50.59	NO
Resp. Mgr.	YES

PECO NUCLEAR

SPENT FUEL POOL INVENTORY / INSPECTION

1.0 PURPOSE

1.1 Present detailed guidance for maintaining an inventory of materials stored within the spent fuel pools.

1.2 Present detailed guidance for tracking the loading applied to the PBAPS Pool Storage Rails.

1.3 Provide detailed criteria and guidance for performing the periodic inspection of the spent fuel pools and LGS cask pit required per A-C-132.

2.0 SCOPE

2.1 This guideline is applicable to the maintenance of the Pool Material Logs and Rail Loading Tracking Sheets located on the LGS and PBAPS Fuel Floors.

2.2 This guideline is applicable to the inspection of the LGS and PBAPS Spent Fuel Pools as well as LGS Cask Pit.

2.3 This guideline also provides guidance for maintenance of records by the Spent Fuel Pool Material Coordinator as required by A-C-132.

3.0 REFERENCES AND SOURCES

3.1 SOURCE DOCUMENTS

1. A-C-132, Spent Fuel Pool Material Storage/Inventory and Housekeeping

3.2 CROSS REFERENCES

1. A-C-130, Fuel Floor Foreign Material Exclusion

4.0 DEFINITIONS

4.1 **DEGRADABLE MATERIALS** - Items composed of plastics, fabrics, or synthetic materials which tend to degrade over time when stored underwater and/or exposed to radiation. Examples are filters, non-metallic hoses and synthetic rope.

4.2 **LIGHT WEIGHT SERVICE TOOL** - Tools which are supported by hand. This is intended to apply to tools which weigh approximately 50 lbs and less, e.g. small grapples, a section of light weight handling pole, etc.

4.3 **INTERIM STORAGE** - Storage of items for a temporary time period under the direction / control of other procedures. Examples are: temporary storage of a fuel support via a core component transfer authorization (CCTAS) which requires the reinstallation of the fuel support in the vessel.

4.4 **POOL MATERIAL LOG** - A listing of all materials, tools and equipment, within the scope of A-C-132, which are stored in the Fuel Pool or LGS Cask Pit. Pool Material Log includes a simplified map of Fuel Pool or Cask Pit onto which workers label the location of items.

4.5 **POOL STORAGE RAILS** - Pipe sections attached to pool wall liner just above the water surface for suspending items in the pool. All PECO Nuclear Fuel Pools except LGS unit 2 has pool storage rails.

4.6 **LONG TERM STORAGE** - The act of placing items underwater in the Fuel Pool or Cask pit at the conclusion of work activities (i.e. work order activity "COMPLT" status) for safe deposit until material can be safely removed from the pool, reinstalled in the reactor or used for assembly of a component.

4.7 **SPECIAL NUCLEAR MATERIAL (SNM)** - Materials containing Plutonium or enriched Uranium as specified in 10 CFR Parts 70 and 74 and includes: Fuel, SRMs, IRMs, LPRMs, WRNMs, Traversing In-Core Probes (TIPs) containing Uranium, Fission Chambers, Fuel Loading Chambers(dunking chambers).

4.8 **UNIQUE STORAGE HARDWARE** - Hardware such as metal containers designed by PECO Nuclear Site Engineering Civil / Structural Branch, Nuclear Maintenance RSS, or vendors which does not match any classification of hardware listed in plant procedures for certification and load testing of rigging hardware.

5.0 RESPONSIBILITIES/AUTHORITY

5.1 **WORKERS** - Update Pool Material Log and Rail Loading Tracking Sheet as required; notify Spent Fuel Pool Material Coordinator when changes to Pool Material Log or Rail Loading Tracking Sheet are made.

5.2 **MAINTENANCE SUPERVISOR-NMD-RSS** - Determine appropriate frequency for updating Pool Material Log during pool work campaigns.

5.3 **SPENT FUEL POOL MATERIAL COORDINATOR** - Maintain a record of items stored within the Pools; oversee and assist with maintenance of Pool Material Log and Rail Loading Tracking Sheet (PBAPS); evaluate needs for fuel pool clean-out activities; provide input to Maintenance Planner for planning of pool inspection; review completed pool inspection checklists.

5.4 **MAINTENANCE PLANNER** - Provide guidance in recurring task work orders for pool inspections as required.

5.5 **RADIATION PROTECTION SUPERVISOR** - Verifies proper locked status of stored items.

6.0 PREREQUISITES

None

7.0 PROCEDURE

7.1 Maintenance of Pool Material Log

7.1.1 Pool Material Log including map shall be up-dated by workers as required when items within the scope of A-C-132 are added to, removed, or relocated in the pools.

7.1.2 All changes to the Pool Material Log should be communicated to the Spent Fuel Pool Material Coordinator (e.g. telephone, aspen, written memo, e-mail). Appropriate contact and phone number should be indicated on log.

7.1.3 Pool Material Log format should be modified as deemed necessary to maintain accuracy and completeness of information. Exhibit 1 shows a suggested format.

7.1.4 Service tools in use or being stored on an Interim basis do not require logging on A-C-132 Pool Material Log; tool may require logging on A-C-130 Material Control Log.

7.1.5 Core/in-vessel components being stored on an Interim basis under the control of other procedures do not need to be added to the Pool Material Log.

7.1.6 Control Rod Blades (CRBs) are adequately tracked by Reactor Engineering and are easy to count, therefore, CRBs do not need to be included on the log.

7.1.7 Pool Material Log should include all items being stored Long Term for future radwaste disposal or future use, analysis or processing.

1. Log should <u>not</u> be used for tracking debris which is discovered in the pool and is considered uncontrolled. A-C-130 provides guidance for what actions are required when uncontrolled debris is discovered in the pool.

2. It is important to include items such as vessel specimens in order to ensure identity and location of item remains known.

3. Nuclear Instruments and the core location they were removed from shall be tracked on the Pool Material Log.

4. Spent Fuel Rack coupons removed from fuel racks shall be logged.

7.1.8 Description of items on Log should be detailed and account for each separate item when practical.

Examples of detailed material log entries:

- "Stainless box containing (4) fuel channel clips , 20 fuel bundle lock tabs and 40 fuel tie rod lock nuts"

- "Approx. 1 ft. length of 2 inch dia. vacuum hose with female cam lock fitting one end, other end cut-off."

Examples of less than standard material log entries:

- "box containing debris"

- "piece of vacuum hose"

7.1.9 Original storage date of degradable materials should be maintained on the Pool Material Log. This information, combined with inspection results will enable Spent Fuel Pool Material Coordinator to evaluate pool clean-out needs.

7.1.10 For tracking purposes, each entry onto Log should be assigned a unique ID#.

7.1.11 All items except those fully released to the Fuel Pool or Cask Pit floor or a storage rack should be tagged with the item's unique ID#.

7.1.12 An entry should be made on a Pool Map to indicate location of item(s) stored. This entry should be the ID# from the Log. Additional annotations should be made to enhance clarity where required.

7.1.13 During performance of multiple, repeated changes to the inventory/location of items in the pool (e.g., during LPRM replacement, Fuel inspection campaigns or pool clean-out projects) the NMD-RSS Supervisor shall determine the appropriate frequency for updating the Pool Material Log.

7.1.14 Spent Fuel Pool Material Coordinator should maintain an information only copy of the log in the office or on the LAN for reference.

7.1.15 Spent Fuel Pool Material Coordinator should periodically review the original Log maintained on the fuel floor for consistency and clarity of entries. Information should be transposed to new sheets or be reproduced electronically as required to maintain clarity.

7.2 <u>Maintenance of PBAPS Rail Loading Tracking Sheet (PBAPS Only)</u>

7.2.1 Rail Loading Tracking Sheet shall be up-dated by workers as required when items are added to, removed, or relocated on the pool storage rails.

1. Since the purpose of the Rail Loading Tracking Sheet is to ensure that Pool Storage Rail load capacities are not exceeded, it is important for workers to up-date sheet as required to include <u>All</u> items suspended from the rails.

2. If an item is resting on pool floor and only the storage cable weight is applied to the rail, the item does not need to be included on the rail loading tracking sheet.

7.2.2 Rail Loading Tracking Sheet format should be modified as deemed necessary to maintain accuracy and completeness of information. Exhibit 3 shows a suggested format.

7.2.3 All changes to the Rail Loading Tracking Sheet should be communicated to the Spent Fuel Pool Material Coordinator.

7.2.4 Spent Fuel Pool Material Coordinator should maintain a information only copy of the Rail Loading Tracking Sheet in the office or on the LAN for reference.

7.2.5 Spent Fuel Pool Material Coordinator should periodically review the original Rail Loading Sheet maintained on the fuel floor for consistency and clarity of entries. Information should be transposed to new sheets or be reproduced electronically as required to maintain clarity.

7.3 Spent Fuel Pool Inspection

7.3.1 Inspections should be performed in accordance with the Fuel Pool Checklist AG-CG-132 Exhibit 4.

7.3.2 Maintenance Planner should consider the following when planning the pool inspection Work Order activity.

- Inspection shall be performed with an underwater camera to look for signs of material degradation.
- Inspect condition of degradable materials which are accessible with camera.
- Inspection should be video taped to support subsequent evaluations which may be necessary. Video should be forwarded to Spent Fuel Pool Material Coordinator.

8.0 **EXHIBITS**

8.1 Exhibit 1, Pool Material Log

8.2 Exhibit 2, Examples of Log Entries

8.3 Exhibit 3, Rail Loading Tracking Sheet

8.4 Exhibit 4, Fuel Pool Checklist

POOL MATERIAL LOG: STATION & UNIT _____ Page____ of ____

NOTE: Radiological information should be entered for all items expected to exceed 1000 mr/hr on contact based on historical or current survey data.

Radiological information shall only be entered by qualified RP personnel.

ID #	Spent Fuel Pool Material Coordinator approval for relocation req'd *	DESCRIPTION Include type of nuclear instrument and core location removed from.	ORIGINAL DATE STORED	LOCKED or RELEASED to pool floor or rack (Yes or No)	RADIOLOGICAL INFORMATION

* To be filled in by Spent Fuel Pool Material Coordinator

Communicate changes to: _____ **ext.**_____ (aspen or written memo or e-mail acceptable).

Examples of Log Entries

Items which should be logged	comments
• vacuum filters	If container into which filter is placed is already on log, simply change quantity of filters indicated.
• Lights, vacuums, poles	Assumed to be stored since radiological conditions prohibited removal (excepts lights)
• LPRMs, IRMs, SRMs, WRNMs	
• Channel fasteners	Assumed stored long term and not on interim basis under fuel inspection procedure control
• Fuel tie rod lock nuts	Ditto
• Fuel lock tab washers	Ditto
• Vacuum hose	Assumed to be radwaste or attached to vacuum
• Vessel specimens	Assumed to be stored long term for future processing
• Nuts, washers or any metallic debris	Assumed to be stored in a deliberate controlled fashion
• Core plate plug	Assumed to be removed for disposal or future analysis
• Fuel channels	Assumed to be removed from bundle and stored long term for future disposal or analysis
• refuel platform test weights	
• Scrap service tools	Assumed to be too radioactive to be removed from pool and desire is to dispose tool during pool clean-out

Items which should not be logged

- CRBs (CRBs are tracked adequately by Reactor Engineering)
- Fuel support to be returned to reactor during an outage via CCTAS
- Jet pumps to be returned to reactor during an outage via work order activity/procedure
- Handling poles or any other service tool which is in use and logged as required by A-C-130
- Fuel assembly parts stored on an interim basis during fuel inspection campaign which are to be reinstalled on a fuel assembly per procedure control.
- Small debris discovered in pool not in appropriate storage/capture device. Reference A-C-130 for required actions and guidance for this situation.

PBAPS POOL RAIL LOADING TRACKING SHEET

DEFINITIONS:

Span: Rail between two wall anchor points

Load Point: The load transmitted by a single storage hook

Cantilever: Rail between the end of the rail and the first anchor point

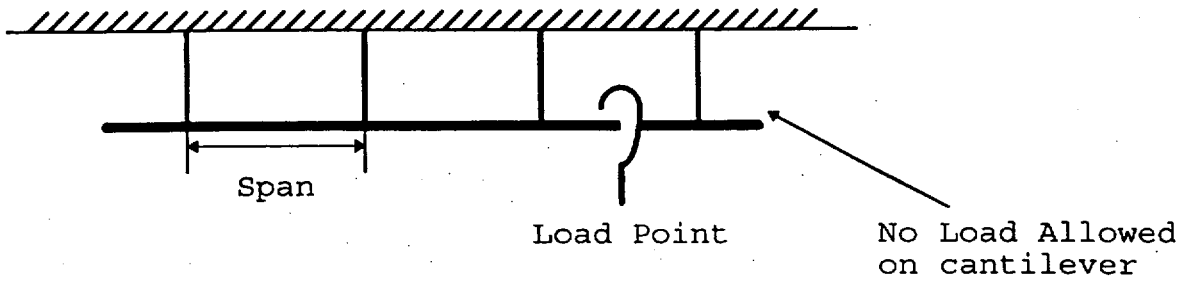

ALLOWABLE LOAD LIMITS:

NOTE: Weight of relatively light objects (i.e., items estimated to be less than 100 lbs.) may be estimated. Weight of items over 100 lbs. shall be determined by documentation, calculation, or by weighing item. NIs weigh **60 lbs each;** Filters **5 lbs each.**

1. Maximum Load Point is 500 lb.
2. Max total Load for each Span is 1100 lbs., except span #2 is 500 lbs.
3. No Load is permitted on cantilever end of rail.
4. Loads shall be distributed as follows:
   - Spans 2,4,5,6,8,10,12, and 13: No spacing requirements apply.
   - Spans 1,3,7,9, and 11: Spacing shall be as follows (measured center-to-center of hooks):
     - Loads less than or equal to 100 lbs shall be spaced at least 4 inches away from other load points.
     - Loads > 100 lbs to 250 lbs shall be spaced at least 10 inches away from other load points.
     - Loads > 250 lbs to 500 lbs shall be spaced at least 24 inches away from other load points.

FUEL POOL MAP (PBAPS UNIT 2)

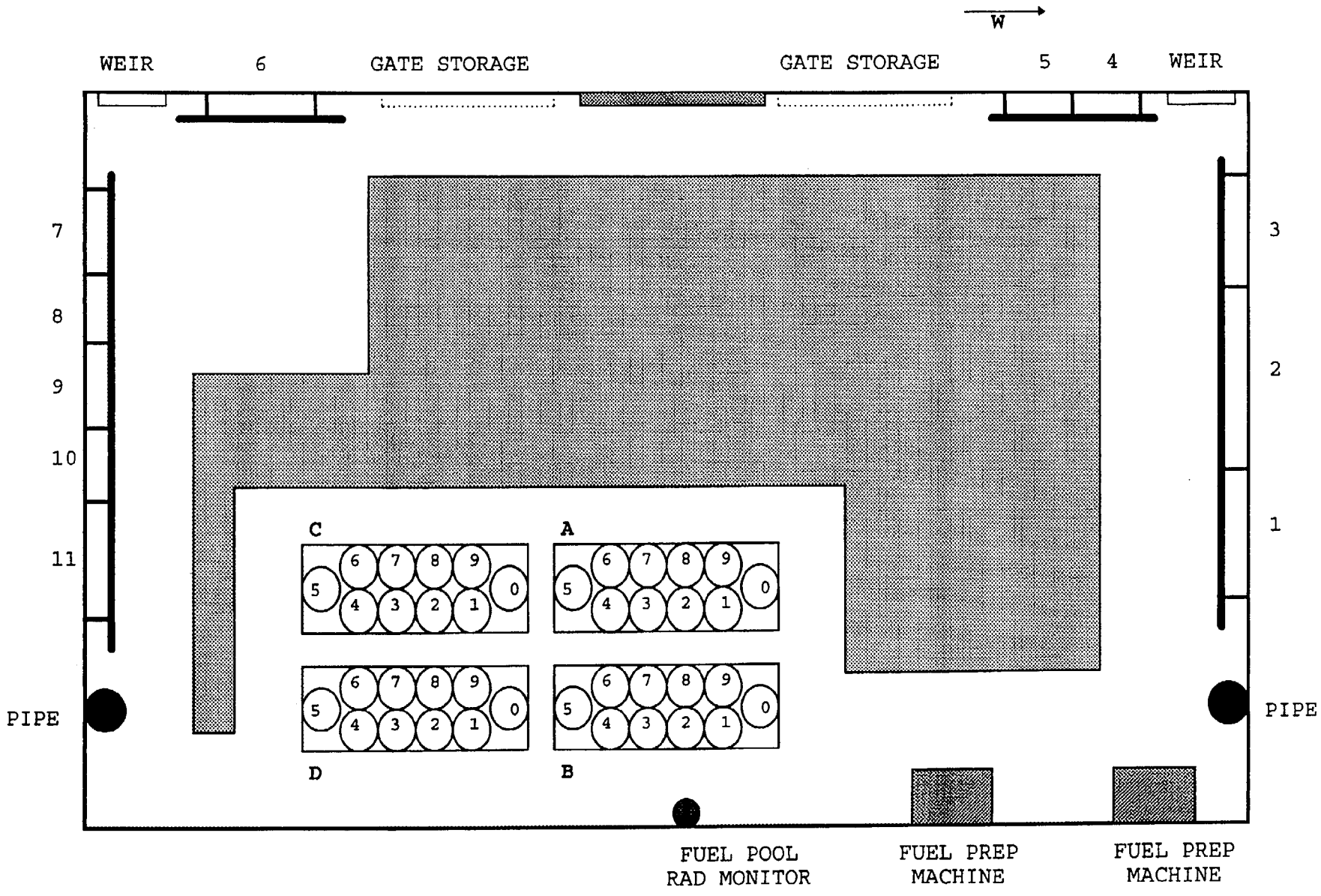

FUEL POOL MAP (PBAPS UNIT 3)

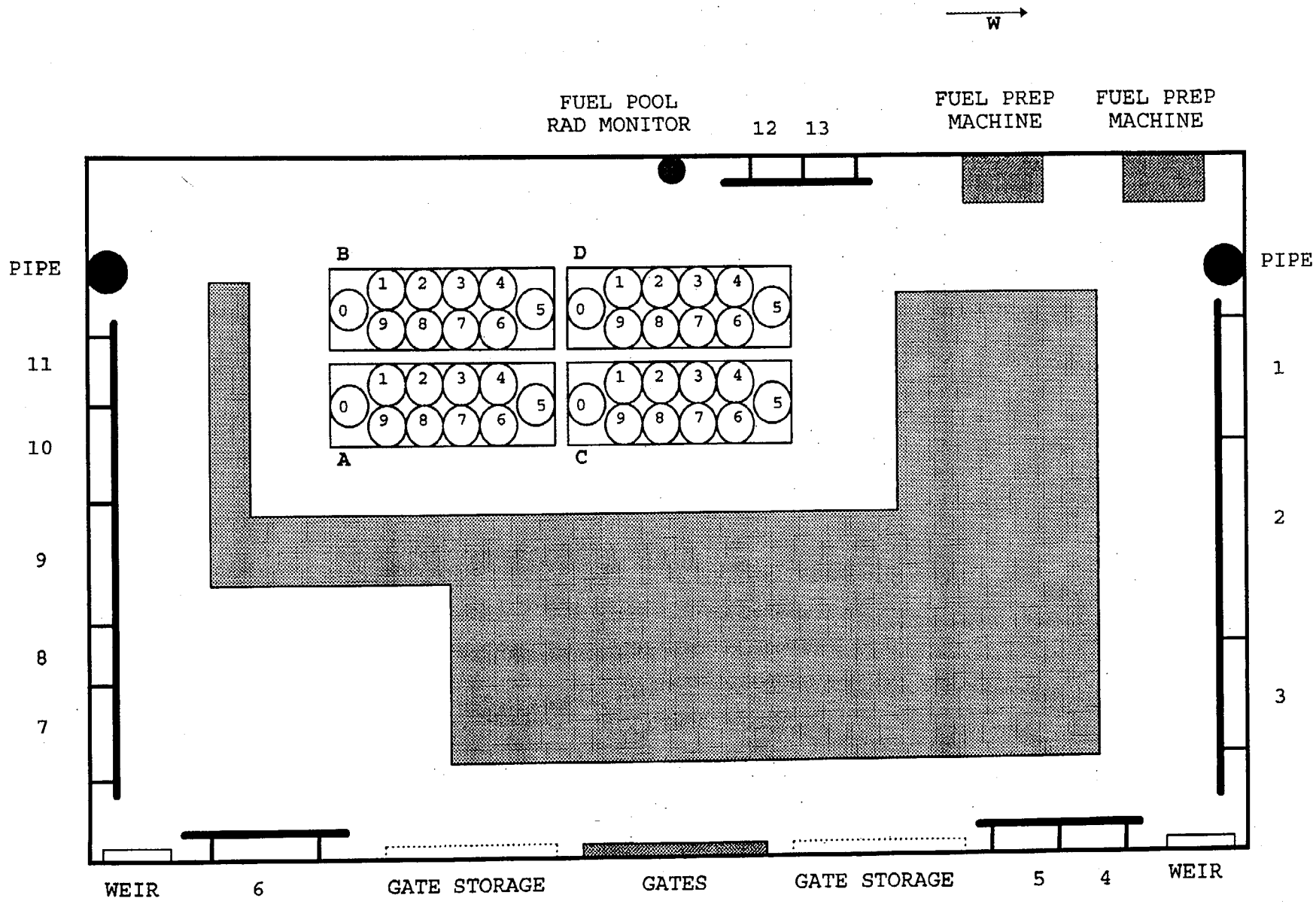

Rail Loading Tracking Sheet PBAPS Unit 2

SPAN 1

ID #	Wt
Total	

SPAN 2

ID #	Wt
Total	

SPAN 3

ID #	Wt
Total	

SPAN 4

ID #	Wt
Total	

SPAN 5

ID #	Wt
Total	

SPAN 6

ID #	Wt
Total	

SPAN 7

ID #	Wt
Total	

SPAN 8

ID #	Wt
Total	

SPAN 9

ID #	Wt
Total	

SPAN 10

ID #	Wt
Total	

SPAN 11

ID #	Wt
Total	

SPAN 12

ID #	Wt
Total	

SPAN 13

ID #	Wt
Total	

PBAPS 2

- span 2 limit 500 lbs
- other spans 1100 lb limit
- Distribute loads per limitations

Rail Loading Tracking Sheet PBAPS Unit 3

SPAN 1

ID #	Wt
Total	

SPAN 2

ID #	Wt
Total	

SPAN 3

ID #	Wt
Total	

SPAN 4

ID #	Wt
Total	

SPAN 5

ID #	Wt
Total	

SPAN 6

ID #	Wt
Total	

SPAN 7

ID #	Wt
Total	

SPAN 8

ID #	Wt
Total	

SPAN 9

ID #	Wt
Total	

SPAN 10

ID #	Wt
Total	

SPAN 11

ID #	Wt
Total	

PBAPS 3

- span 2 limit 500 lbs
- other spans 1100 lb limit
- Distribute loads per limitations

FUEL POOL CHECKLIST

NOTE: Unsatisfactory steps shall be brought to the attention of NMD-RSS Supervisor and corrective action shall be initiated per A-C-26.

1. All items are logged on Pool Material Log.
2. All items are called-out and accurately located on Pool Map.
3. All items suspended from PBAPS storage rails are listed on and are distributed per Rail Loading Tracking Sheet.
4. All items are stored in acceptable locations per A-C-132.
5. Items (including all supporting storage hardware) appear intact/stable (no signs of significant deterioration). Contents of containers not dislodged.
6. Cables supporting items are not frayed, twisted/tangled.
7. Visible LGS Cask Pit (including canal area where gates are installed) and PBAPS cask area surfaces are free from build-up of crud, corrosion, and foreign material.
8. Rack labels are readable.
9. Fuel Pool is illuminated to distinguish features of pool racks.
10. Items suspected to not belong in the Fuel Pool or LGS Cask Pit have been evaluated with NMD-RSS Supervisor and Radiation Protection Supervisor.
11. Use of handrails for anchor point for tools or materials and use of nylon braided rope are consistent with Limitations and Standards as stated in A-C-132.
12. Radiation Protection Supervisor review of current Pool Material Log and locked status of materials.

_____
RP Supervisor

13. **Corrective Actions/ Comments:**_____

Performed by:_____ Date:_____

Spent Fuel Pool Material Coordinator:_____ Date:_____

TITLE: Abnormal WRNM Response During Core Alterations

TASK PERFORMED BY: _____ EVALUATOR: _____

EVALUATOR SIGNATURE: _____ DATE: _____

DIRECTIONS TO EVALUATOR:

Two CCTAS sheets are provided: Unit 2 and Unit 3. Only the sheet corresponding to the unit selected for the JPM is given to the candidate.

EVALUATION METHOD :

Simulate

EVALUATION LOCATION:

Refuel Floor

APPROXIMATE COMPLETION TIME:

Completion Time: 10 minutes

IMPORTANCE RATING(S):	SYSTEM NUMBER(S):
4.1	295023AA2.04

REFERENCES:

SO18.A.2 Rev.11, OPERATION OF REFUELING PLATFORM
FH-6C, Rev. 56, CORE COMPONENT MOVEMENT-CORE TRANSFERS
ON-124 Rev 6, FUEL FLOOR AND FUEL HANDLING PROBLEMS - PROCEDURE

TASK STANDARD(S):

Core alteration halted and fuel floor evacuated per ON-124

TASK CONDITIONS:

1. Shuffle part 2 is in progress on Unit 2 (3)
2. All prerequisites are met for core alterations in FH-6C
3. CCTAS Step 331 is being executed
4. Semi-automatic motion over the core target location has just stopped per SO18.1.A.-2(3) Step 4.14.1

INITIATING CUES:

You are directed to continue core alterations with CCTAS Step 331 as the Fuel Handling Director

Critical Element(s) indicated by "*" in Performance Checklist.

PERFORMANCE CHECKLIST:

STEP	STANDARD	SAT/UNSAT
Resumption of Core Alterations in SO18.A-2(3)		
1. *Lower load until the hoist position indicates approximately 335 inches, then stop lowering CUE: Hoist position is 335 inches	Hoist lowered to approximately 335 inches, then motion stopped	
2. *Rotate core component as necessary to achieve proper orientation CUE: Mast is oriented in the direction you have indicated	Mast rotated so bundle channel fastener is oriented Southwest	
3. Perform double verification to ensure proper core component location and orientation CUE: Double verification has been performed	Double verification performed	
4. If load is a fuel bundle, then FHD shall inform unit operator of pending fuel insertion in the core CUE: RO acknowledges bundle going into the core per CCTAS step 331	Notify Unit RO that a bundle is going to be inserted into 03-42. (Also OK to notify that Step 331 bundle is going to be inserted)	
5. When directed by FHD, then lower the load until "SLACK CABLE" light is lit CUE: RPO acknowledges OK to lower load. Bundle is going in. WAIT APPROX 15 SECONDS – Report as RPO "Bundle is entering the core" *CUE: WAIT APPROX 10 SECONDS – Report as Unit RO that "Alpha" and "Charlie" Wide Range Monitor counts have doubled	Direct the RPO to lower the load until SLACK CABLE light is lit	

STEP	STANDARD	SAT/UNSAT
WRNM Counts Double – Stop Core Alterations		
6. *From FH-6C : Continuously observe WRNMs as applicable during core alterations and immediately notify the Fuel Handling Director and Shift Supervision to suspend component movement if any WRNM count rate has doubled between CCTAS steps CUE: Hoist is stopped	Direct hoist motion to be stopped	
7. CUE: As RO – Now ALL Wide Range Monitors are going up past three doublings. Period is about 100 seconds.	N/A	
Refueling Accident – Inadvertent Criticality		
8. *If WRNM count rate has doubled two times, then enter ON-124 immediately	Enter ON-124	
9. If WRNM count rate stabilizes at a value less than 2 doublings and no WRNM spiking or indication of WRNM inoperability exists, then component movement may resume This does not apply to the first, second, third, or fourth fuel bundles placed adjacent to a WRNM at the beginning of core re-load	N/A – Recognize that this bundle is not immediately adjacent to a WRNM	
ON-124 Actions		
10. If WRNM count rate doubled two times between CCTAS steps, then	N/A	
a. If grappled, then raise the fuel assembly from core so that it clears the upper grid (approximately 360 inches hoist poisition) CUE: As RPO – "Bundle coming up"…."Wait, I got a hoist jam lamp. The hoist is stopped at 420 inches"	Direct the bundle to be raised	
11. Notify Shift management	Notify MCR that a hoist jam exists	

STEP	STANDARD	SAT/UNSAT
12. Determine WRNM count rate CUE: As RO – "ALL Wide Range Monitors are still going up. Alpha and Charlie are going past 300 counts and still rising. Period is still 100 seconds	Ask for RO report of WRNM count rate Recognize indications are of a critical reactor	
13. *If count rate continues to raise (criticality), then evacuate the Fuel Floor to Turbine Building elevation 165' or area designated by Shift management per GP-15, "Local Evacuation" CUE:The ARMs on the walls are alarming. Now the ARM in the cab is alarming with a red rotating beacon. Dose rate is 35 mRem/hr on the meter and climbing	Abandon actions to use hoist to raise fuel. Direct the evacuation of the fuel floor and bridge crew to Turbine Building 165' elevation.	

Comments:

Note: Any grade of UNSAT requires a comment.

JPM Overall Rating: _____
SAT/UNSAT

TASK CONDITIONS:

1. Shuffle part 2 is in progress on Unit 2 (3)
2. All prerequisites are met for core alterations in FH-6C
3. CCTAS Step 331 is being executed
4. Semi-automatic motion over the core target location has just stopped per SO18.1.A.-2(3) Step 4.14.1

INITIATING CUES:

You are directed to continue core alterations with CCTAS Step 331 as the Fuel Handling Director

CANDIDATE

TRANSFER A .HORIZATION FOR FH-6C
M-21966 Rev. 1/89
DOCTYPE 113

WRNM ONLY

Unit PEACH BOTTOM ATOMIC POWER STATION
Title TRAINING CCTAS

Date 06/04/02

Written By: TRAINING USE ONLY
Reviewed By: TRAINING USE ONLY
Authorized By: TRAINING USE ONLY

STEP NO.	COMPONENT SERIAL NO.	MOVE FROM	ORIENT	MOVE TO	ORIENT	FHD	RPO	CRO	WRNM COUNTRATE								DATE	TIME
									A	B	C	D	E	F	G	H		
331	PYG651	P2SPENT N-46	NW	P2CORE 03-42	SW													
332	PYN521	P2SPENT C-22	NW	P2CORE 01-44	NE													
333	PYN463	P2SPENT C-21	SW	P2CORE 01-42	NW													
334	PYG764	P2SPENT P-46	SW	P2CORE 03-44	SE													
335	PJ1447	P2SPENT C-18	SW	P2CORE 17-50	NW													

CANDIDATE

Unit 2 JPM

PB JPM 5 CCTAS

TRANSFER A. .HORIZATION FOR FH-6C
M-21966 Rev. 1/89
DOCTYPE 113

WRNM ONLY

Unit PEACH BOTTOM ATOMIC POWER STATION
Title TRAINING CCTAS

Date 06/04/02

Written By: TRAINING USE ONLY
Reviewed By: TRAINING USE ONLY
Authorized By: TRAINING USE ONLY

STEP NO.	COMPONENT SERIAL NO.	MOVE FROM	ORIENT	MOVE TO	ORIENT	FHD	RPO	CRO	WRNM COUNTRATE								DATE	TIME
									A	B	C	D	E	F	G	H		
331	PYG651	P3SPENT N-46	NW	P3CORE 03-42	SW													
332	PYN521	P3SPENT C-22	NW	P3CORE 01-44	NE													
333	PYN463	P3SPENT C-21	SW	P3CORE 01-42	NW													
334	PYG764	P3SPENT P-46	SW	P3CORE 03-44	SE													
335	PJ1447	P3SPENT C-18	SW	P3CORE 17-50	NW													

CANDIDATE

Unit 3 JPM

PB JPM 5 CCTAS

PECO Energy Company
Peach Bottom Unit 2

SO 18.1.A-2 OPERATION OF REFUELING PLATFORM

1.0 PURPOSE

This provides the instruction necessary to operate the Refueling Platform Main Hoist for core component and DUMMY fuel bundle movements within the Fuel Pool and Reactor Core. This procedure shall be used in conjunction with Fuel Handling Procedure FH-6C, "Core Component Movement - Core Transfers", or FH-35, "Control of Material Movement in the Fuel Pool" as appropriate.

2.0 PREREQUISITES

2.1 IF performing transfers in the Reactor, THEN all prerequisites included in Procedure FH-6C, "Core Component Movement - Core Transfers" have been completed as appropriate.

2.2 IF performing transfers in the Fuel Pool only, THEN all prerequisites included in Procedure FH-35, "Control of Material Movement in the Fuel Pool" have been completed as appropriate.

2.3 DUMMY fuel bundle movement shall be governed by FH-35 OR FH-6C.

2.4 Refuel Platform started up AND checked out in accordance with SO 18.1.C-2, "Electrical, Mechanical and Pneumatic Alignment/Checkout of Refueling Platform." The main hoist section of the Refueling Platform Preoperational Checkoff List should be performed over the Reactor Cavity as soon as possible after core is accessible. Performing the preoperational checks in the cavity will ensure the mast will lower to the core height without binding.

2.5 IF operating in Full Automatic OR Semi-Automatic modes, THEN both Primary AND Redundant Encoders are selected for each axis on the UTILITIES screen(Ref. 6.5).

2.6 IF performing movement to OR from a Spent Fuel Storage Cask, THEN Cask Loading Normal Up limit shall be selected, OTHERWISE Refueling Normal Up limit shall be selected.

2.7 Attachment 9 of this procedure is posted on the Refueling Platform Mast.

3.0 PRECAUTIONS

3.1 WHEN operating equipment, IF it does NOT perform as expected, THEN place the equipment in a safe condition AND inform Shift Management or Fuel Handling Director(FHD).

3.2 Procedures SO 18.7.G-2, "Refueling Platform Overrides and Bypasses" and SO 18.7.F-2, "Handwheel Operation of Refueling Platform Bridge, Trolleys and Hoists" provide alternate methods for platform operation when the Refueling Platform is NOT performing as expected.

3.3 The monorail and frame mounted auxiliary hoist shall be full-up on hoist override with tools removed when not in use. Alternately, the tool and hoist cable may be stored in a safe location. Jam blocks shall be installed on aux hoist cables at all times.

3.4 Blade guides may be removed from the reactor core provided the associated control rod blade will be diagonally supported by fuel or other blade guide(s).

3.5 To prevent impact or mast/fuel assembly damage:

3.5.1 Trolley and Bridge shall always be accelerated AND decelerated slowly, avoiding sudden starts and stops.

3.5.2 Travel paths shall be clear before moving core components.

3.5.3 IF fuel OR a blade guide is grappled on the Main Hoist(grapple engaged), THEN "GRAPPLE NORMAL UP" light shall be lit before moving into Transfer Canal.

3.5.4 IF Main Hoist grapple is empty (grapple open), THEN Main Hoist position shall indicate less than 164 inches before moving into Transfer Canal.

3.5.5 Main Hoist grapple shall be in Normal Up position with "GRAPPLE NORMAL UP" light lit when not in use.

3.5.6 IF a core component is partially inserted into a location, THEN Bridge AND Trolley shall only be moved using the TRAVERSE SYSTEM joystick for minor adjustments.

3.5.7 IF possible, observe channel fastener as it enters the core, fuel rack or sipping canister. To ensure channel fastener does NOT catch, push or pull mast assembly as required as bundle approaches fully seated position.

3.5.8 Use extreme caution and a slow hoist speed when handling unchanneled fuel bundles. Unchanneled bundles have the potential to twist and damage the bundle. Finger springs on the lower tie plate and fuel rod spacers may catch during bundle removal OR insertion.

3.5.9 The following precautions apply when loading a fuel cask:

3.5.9.1 Top edge of cask fuel compartment could be damaged if impacted by a fuel bundle or weight of bundle is transferred to compartment. Use great care when aligning fuel bundle with cask opening.

3.5.9.1 Cask drain line protrudes into cask above the elevation of the fuel basket. Use great care when maneuvering bundles near the drain line as impacting drain line could cause fuel damage and/or drain line damage.

3.6 Mast camera may impact surrounding structures when manipulating core components in the Reactor Core periphery, Fuel Pool periphery, Fuel Preparation Machine or Spent Fuel Storage Cask. Exercise caution to avoid impact damage.

3.7 IF during hoist operation:

3.7.1 "HOIST JAM" light comes on, THEN immediately stop and lower until "HOIST JAM" light goes out, THEN inform Fuel Handling Director for instruction.

3.7.2 "HOIST LOADED" light goes out prematurely, OR the load starts to lean, THEN:

3.7.2.1 Immediately stop lowering hoist.

3.7.2.2 Verify grapple switch is in "ENGAGE" position.

3.7.2.3 Verify "GRAPPLE ENGAGED" light is lit.

3.7.2.4 Slowly raise hoist to regain the weight of the load.

3.7.2.5 Inform Fuel Handling Director.

3.7.3 "GRAPPLE ENGAGED" light goes out unexpectedly during operation, THEN immediately stop and inform Fuel Handling Director.

3.7.4 "HOIST LOADED" light comes on unexpectedly while raising grapple, THEN:

3.7.4.1 Immediately stop raising hoist.

3.7.4.2 Slowly lower hoist until "HOIST LOADED" light goes out.

3.7.4.3 Inform Fuel Handling Director.

3.7.5 "ROD BLK INTERLK #1" light does NOT light when refuel platform is over the core with the Main Hoist fuel loaded, THEN stop refuel platform operation AND inform Fuel Handling Director.

3.8 Fuel bundles may contact Control Rod Blades (CRB) at two elevations, approximately 385" and 400" hoist encoder position.

3.9 Prior to component handling concurrent with use of other unique equipment in the Reactor Cavity or Spent Fuel Pool, a determination should be made regarding the level of monitoring necessary to prevent contact between the equipment and the refuel platform mast, mast camera or core components suspended from the grapple.

Examples of unique equipment include in-vessel inspection or repair equipment, particularly those with umbilical cables. Depending on the risk of interference, consideration shall be given to positioning an individual on the refuel platform assigned the responsibility to monitor the position of the equipment (and umbilical if applicable) and alert Fuel Handling crew to STOP if interference is imminent.

3.10 If possible the fuel grapple shall be directly observed to be closed prior to lifting a load. Also check that the load's bail handle is inside the grapple head.

3.11 The RPO must NOT watch the hoist position indicator exclusively when a handled component is about to enter a designated location or when the empty grapple is approaching a seated component. The operator should observe component or grapple movement to avoid damage.

3.12 Peripheral fuel assemblies have a potential to miss their fuel support and seat low. Use extreme caution to maintain proper alignment while inserting assembly into the core.

3.13 Fuel bundles should be seated using a constant slow hoist speed while gently shaking the mast. Extreme slow speed and the absence of vibration increases the potential for bundles to require reseating.

3.14 Extra caution should be used when handling very old bundles. Careful monitoring of hoist load should be performed during lifting to ensure failure of bundle tie rods is promptly identified. In addition, channel fasteners AND bail handles have been found bent on old bundles which can lead to difficulty seating or releasing the bundle.(Reference 6.6)

3.15 Gentle rotation of the mast in both directions should be used prior to grapple engagement to ensure the fuel grapple is centered on the bail handle. Rapid OR rough rotation during this check can lead to bundle damage, particularly when moving dechanneled fuel bundles(Reference 6.6).

3.16 The Refueling Platform shall be operated at the REFUELING PLATFORM OPERATOR access level unless specified otherwise in this OR other controlling procedures.

3.17 Power is removed from the cabinet air conditioners when a FAULT LOCKOUT occurs OR the STOP push button is depressed. This may cause a "CONSOLE HIGH TEMPERATURE" alarm.

3.18 Bridge speed is limited when the Main Hoist grapple is closed(engaged) AND the Main Hoist NOT fuel loaded. In this condition the PLC logic assumes there is a single or double blade guide on the Main Hoist and limits speed to prevent excessive drag loading on the mast(Ref. 6.7).

3.19 Prior to leaving the refueling platform temporarily unattended, the platform shall be positioned as directed by the FHD and the "STOP" push button depressed. Procedure SO 18.2.A-2, "Shutdown Of Refueling Platform", shall be performed for longer periods of shutdown(e.g. lunch hour, overnight, etc.).

3.20 IF Refueling Platform power needs to be temporarily interrupted (e.g., electrical blocking for emergent repairs OR transfer to/from alternate power supply), THEN perform computer shutdown section of SO 18.2.A-2, "Shutdown of Refueling Platform" prior to interrupting power.

3.21 Deenergizing the refueling platform while over the Reactor Cavity(track switches actuated) will generate a Rod Withdrawal Block in the Main Control Room. Notify Unit Reactor Operator prior to deenergizing the refueling platform with the track switches actuated.

3.22 The touch screen on the Operator Interface Console is required to be functional in order to change configuration of certain parameters(e.g., selection of Normal Up limit, selection of encoders for each axis, modification of Secure Travel Zone to recognize Fuel Pool Gate as removed or installed) and to operate in Semi-Automatic or Full Automatic modes. If all parameters are configured as required, the touch screen is NOT required to be functional for safe refueling platform operation in manual mode. Although the screen annunciator messages will NOT be available, the corresponding conditions will be evident via other visual or functional indications.

3.23 IF power to the PLC is interrupted while operating without a functional touch screen, THEN the Fuel Pool Gate status will default to "installed" when power is restored, preventing entrance into the Transfer Canal. The PLC will also default to the Refueling Normal Up limit when power is restored.

3.24 IF the message "COMMUNICATION TO THE PLC HAS BEEN LOST" is displayed on the touch screen meaning no further screen updates are possible, THEN refueling platform operation may continue in manual mode.

3.25 The OPERATOR INTERFACE CONSOLE AND SRO Station screens may be used as an alternate to the Right Hand OR Left Hand Controllers for verification of "SLACK CABLE", "HOIST LOADED", "GRAPPLE NORMAL UP" and "GRAPPLE ENGAGED" light status.

3.26 The keyboard AND/OR mouse stored in the OPERATOR INTERFACE CONSOLE may be connected to the front of the OPERATOR INTERFACE CONSOLE and used as an alternative to the "touch" function of the touch screen.

3.27 The computer slave screen at the SRO Station is for convenience and NOT required to be operational for Refueling Platform operation.

3.28 The Mast Orientation Interlock logic is NOT required to be functional for safe Refueling Platform operation. This optional feature is only active in Full Automatic mode and is a backup to the Double Verification by the FHD and RPO OR FHD and Spotter, which is the primary means of component orientation verification. Procedure SO 18.7.G-2, "Refueling Platform Overrides and Bypasses" provides instructions necessary to bypass the Mast Orientation Interlock logic if it is NOT performing as expected.

3.29 Attachments 1 through 4 summarize Refuel Platform interlocks and annunciators, including initiating conditions and effects on the system. Some of the screen annunciators provide suggested actions based on the initiating conditions. IF any annunciators appear unexpectedly, including those with suggested actions, THEN stop platform operation AND inform FHD prior to taking any action.

3.30 Touch screen annunciators with a pink background will bring up a popup information screen when touched. Touching "ACKNOWLEDGE" will close the popup screen.

3.31 Attachments 6 through 8 provide information regarding the Secure Travel Zone, Grapple Release Zone and bridge, trolley and hoist speed zones.

3.32 A CCTAS is not required for movement of the DUMMY fuel bundle.

4.0 PERFORMANCE STEPS

NOTES

1. The performance steps section of this procedure is separated into the following subsections:

   - o 4.1, Logging ON Computer
   - o 4.2, Change Person Logged ON Computer
   - o 4.3, Selection of Encoders for Bridge, Trolley and Hoist
   - o 4.4, Selection of Normal Up Limit
   - o 4.5, Loading Fuel Move Sequence From Shuffleworks
   - o 4.6, Semi-Automatic Operation
   - o 4.7, Full Automatic Operation
   - o 4.8, Pickup Location - Fuel Pool Storage Rack
   - o 4.9, Pickup Location - Reactor Core
   - o 4.10, Pickup Location - Fuel Preparation Machine
   - o 4.11, Pickup Location - Bundle Sipping Canister
   - o 4.12, Pickup Location - Spent Fuel Storage Cask
   - o 4.13, Set Down Location - Fuel Pool Storage Rack
   - o 4.14, Set Down Location - Reactor Core
   - o 4.15, Set Down Location - Fuel Preparation Machine
   - o 4.16, Set Down Location - Bundle Sipping Canister
   - o 4.17, Set Down Location - Spent Fuel Storage Cask

2. Perform applicable subsections of Section 4.0 at the direction of the FHD.

3. Refueling Platform operating mode(i.e. Manual, Semi-Automatic or Full Automatic) is NOT prescribed in the pickup/set down subsections of this procedure. Operating mode is at the discretion of the fuel handling crew.

4.1 Logging ON Computer

4.1.1 Touch "LOG ON" AND enter name.

4.1.2 IF incorrect name was entered, THEN touch "CHANGE NAME" AND enter name.

4.1.3 Touch "ENTER PASSWORD" AND enter password.

NOTE

Answering "YES" to the question "IS THE REFUELING GATE INSTALLED" modifies the Secure Travel Zone boundary to NOT allow entrance into the Transfer Canal.

4.1.4 At screen prompt "IS THE REFUELING GATE INSTALLED?", answer "YES" if either gate is installed OR "NO" if both gates are removed.

4.1.5 Verify proper access level is displayed.

4.1.6 Touch "PRESS FOR OPERATION" to display "MAIN" screen.

4.2 Change Person Logged ON Computer

4.2.1 Touch "SHOW MENU".

4.2.2 Touch "LOG OFF"

4.2.3 Touch "YES/LOG OFF".

4.2.4 New operator perform Section 4.1 of this procedure.

4.3 Selection of Encoders for Bridge, Trolley and Hoist

NOTE

This section can only be performed by personnel with FUEL HANDLING DIRECTOR access level OR higher.

4.3.1 Touch "SHOW MENU".

4.3.2 Touch "UTILITIES".

NOTE

Steps 4.3.3 through 4.3.5 apply to the Bridge, Trolley and Hoist encoders.

****
* CAUTION *
*
* Operation in Semi-Automatic OR Full Automatic modes *
* requires both Primary AND Redundant Encoders to be *
* selected(i.e. "0") for each axis in order to prevent *
* collision of the mast OR handled component in the event *
* a single encoder fails(Ref. 6.5). *
****

4.3.3 Touch screen button displaying current encoder selection for the axis to be set.

4.3.4 On the number pad enter desired encoder selection(i.e. "0", "1" OR "2").

4.3.5 Verify desired encoder selection is displayed on button.

4.3.6 Touch "RETURN TO OPERATION".

4.3.7 Perform Section 4.2 "Change Person Logged ON Computer" of this procedure to ensure operation at REFUELING PLATFORM OPERATOR access level.

4.4 Selection of Normal Up Limit

> NOTE
>
> This section can only be performed by personnel with FUEL HANDLING DIRECTOR access level OR higher.

4.4.1 Touch "SHOW MENU".

4.4.2 Touch "UTILITIES".

4.4.3 Touch "Refueling/Cask Loading" button to select appropriate Normal Up limit for the planned evolution.

4.4.4 Verify desired Normal Up Limit is displayed.

4.4.5 Touch "RETURN TO OPERATION".

4.4.6 Perform Section 4.2 "Change Person Logged ON Computer" of this procedure to ensure operation at REFUELING PLATFORM OPERATOR access level.

4.5 Loading Fuel Move Sequence From Shuffleworks

> NOTE
>
> This section can only be performed by personnel with FUEL HANDLING DIRECTOR access level OR higher.

4.5.1 Touch "SHOW MENU".

4.5.2 Touch "UTILITIES".

4.5.3 Touch "GO TO DATABASE".

4.5.4 Verify floppy disk containing the fuel move sequence has the appropriate approvals required by RE-C-40, "Core Component Transfer Authorization Sheet Generation and Administration".

4.5.5 At the OPERATOR INTERFACE CONSOLE insert the floppy disk into the computer.

4.5.6 Touch "LOAD NEW SEQUENCE FILE".

4.5.7 Select type of move sequence, i.e., SHUFFLE, OFFLOAD OR RELOAD.

4.5.8 WHEN the prompt appears "Is The New Sequence Disk in Drive A:\", THEN touch "YES".

4.5.9 WHEN file has completed loading from disk, THEN remove floppy disk.

4.5.10 Touch "Open Sequence File".

NOTE

The Shuffleworks file designates orientation as follows:

0 - NE
1 - SE
2 - SW
3 - NW

4.5.11 Verify a sample of steps against the paper copy Core Component Transfer Authorization Sheet(CCTAS).

4.5.12 Touch "Return To Control".

4.5.13 Touch "RETURN TO OPERATION".

4.5.14 Perform Section 4.2 "Change Person Logged ON Computer" of this procedure to ensure operation at REFUELING PLATFORM OPERATOR access level.

4.6 Semi-Automatic Operation

NOTES

1. The Refuel Platform computer does NOT recognize Fuel Pool Storage Rack locations outside the Secure Travel Zone, the Fuel Preparation Machines, Bundle Sipping Canisters OR Spent Fuel Storage Cask locations as valid locations for automatic moves.

2. An automatic move can be terminated at any time by performing one of the following:
   - o touching "AUTO STOP" on the MAIN OR HOIST screen
   - o deflecting any of the master joysticks
   - o depressing "STOP" push button on START/STOP STATION
   - o depressing "TRAVEL OVERRIDE" on RIGHT HAND CONTROLLER

****
* CAUTION *
*
* Operation in Semi-Automatic mode requires both Primary *
* AND Redundant Encoders to be selected for each axis in *
* order to prevent collision of the mast OR handled *
* component in the event a single encoder fails(Ref. 6.5). *
****

4.6.1 IF desired to change mode of multiple axis automatic operation, THEN perform the following; OTHERWISE continue with step 4.6.2:

4.6.1.1 Touch "SHOW MENU".

4.6.1.2 Touch "XY/XY&Z MODE ACTIVE" as necessary to select the desired mode of multiple axis automatic operation.

4.6.1.3 Touch "PRESS FOR OPERATION".

4.6.2 IF operating in the XY mode, THEN perform the following, OTHERWISE continue with step 4.6.3 of this procedure:

4.6.2.1 IF in the Fuel Pool AND grapple is released, THEN verify hoist position indicates less than 164 inches.

4.6.2.2 IF in the Fuel Pool AND grapple is engaged, THEN verify hoist is at Normal Up position.

4.6.2.3 IF above the core AND grapple is released AND the requested location will be in the core, THEN verify hoist position indicates less than 530 inches.

4.6.2.4 IF above the core AND grapple is released AND the requested location will be in the Fuel Pool, THEN verify hoist position indicates less than 164 inches.

4.6.2.5 IF above the core AND grapple is engaged AND the requested location will be in the core, THEN verify hoist position indicates less than 355 inches.

4.6.2.6 IF above the core AND grapple is engaged AND the requested location will be in the Fuel Pool, THEN verify hoist is at Normal Up position.

4.6.3 IF operating in the XY&Z mode, THEN perform the following, OTHERWISE continue with step 4.6.4 of this procedure:

4.6.3.1 IF in the Fuel Pool AND grapple is released, THEN verify hoist position indicates less than 164 inches.

4.6.3.2 IF in the Fuel Pool AND grapple is engaged, THEN verify hoist is at Normal Up position.

4.6.3.3 IF above the core AND grapple is released, THEN verify hoist position indicates less than 530 inches.

4.6.3.4 IF above the core AND grapple is engaged, THEN verify hoist position indicates less than 355 inches.

4.6.4 Verify Bridge AND Trolley are within the Secure Travel Zone.

4.6.5 Verify Bridge AND Trolley are NOT in the Transfer Canal.

4.6.6 Touch "SELECT AUTO" on the Main OR Hoist screens.

4.6.7 IF during auto move selection it is desired to return to manual operation, THEN touch "SELECT MANUAL", OTHERWISE continue with this procedure subsection.

4.6.8 Touch "Manual Step Selection Active"/ "Auto Step Selection Active" as necessary to select "Manual Step Selection Active".

4.6.9 Touch "REQUEST" AND enter the desired location on the keypad screen.

4.6.10 IF requested location is correct, THEN touch "VERIFY"; OTHERWISE return to step 4.6.9.

4.6.11 Touch "AUTO RUN" to initiate Refueling Platform movement.

4.7 Full Automatic Operation

NOTES

1. The Refuel Platform computer does NOT recognize Fuel Pool Storage Rack locations outside the Secure Travel Zone, the Fuel Preparation Machines, Bundle Sipping Canisters OR Spent Fuel Storage Cask locations as valid locations for automatic moves.

2. An automatic move can be terminated at any time by performing one of the following:
   - touching "AUTO STOP" on the MAIN OR HOIST screen
   - deflecting any of the master joysticks
   - depressing "STOP" push button on START/STOP STATION
   - depressing "TRAVEL OVERRIDE" on RIGHT HAND CONTROLLER

****
* CAUTION *
*
* Operation in Full Automatic mode requires both Primary *
* AND Redundant encoders to be selected for each axis *
* in order to prevent collision of the mast OR handled *
* component in the event a single encoder fails(Ref. 6.5). *
****

4.7.1 IF desired to change mode of multiple axis automatic operation, THEN perform the following; OTHERWISE continue with step 4.7.2:

4.7.1.1 Touch "SHOW MENU".

4.7.1.2 Touch "XY/XY&Z MODE ACTIVE" as necessary to select the desired mode of multiple axis automatic operation.

4.7.1.3 Touch "PRESS FOR OPERATION".

4.7.2 IF operating in the XY mode, THEN perform the following, OTHERWISE continue with step 4.7.3 of this procedure:

4.7.2.1 IF in the Fuel Pool AND grapple is released, THEN verify hoist position indicates less than 164 inches.

4.7.2.2 IF in the Fuel Pool AND grapple is engaged, THEN verify hoist is at Normal Up position.

4.7.2.3 IF above the core AND grapple is released AND the requested location will be in the core, THEN verify hoist position indicates less than 530 inches.

4.7.2.4 IF above the core AND grapple is released AND the requested location will be in the Fuel Pool, THEN verify hoist position indicates less than 164 inches.

4.7.2.5 IF above the core AND grapple is engaged AND the requested location will be in the core, THEN verify hoist position indicates less than 355 inches.

4.7.2.6 IF above the core AND grapple is engaged AND the requested location will be in the Fuel Pool, THEN verify hoist is at Normal Up position.

4.7.3 IF operating in the XY&Z mode, THEN perform the following, OTHERWISE continue with step 4.7.4 of this procedure:

4.7.3.1 IF in the Fuel Pool AND grapple is released, THEN verify hoist position indicates less than 164 inches.

4.7.3.2 IF in the Fuel Pool AND grapple is engaged, THEN verify hoist is at Normal Up position.

4.7.3.3 IF above the core AND grapple is released, THEN verify hoist position indicates less than 530 inches.

4.7.3.4 IF above the core AND grapple is engaged, THEN verify hoist position indicates less than 355 inches.

4.7.4 Verify Bridge AND Trolley are within the Secure Travel Zone.

4.7.5 Verify Bridge AND Trolley are NOT in the Transfer Canal.

4.7.6 Touch "SELECT AUTO" on the Main OR Hoist screens.

4.7.7 IF during auto move selection it is desired to return to manual operation, THEN touch "SELECT MANUAL", OTHERWISE continue with this procedure subsection.

4.7.8 Touch "Manual Step Selection Active"/ "Auto Step Selection Active" as necessary to select "Auto Step Selection Active".

> NOTE
>
> The selected portion(PICKUP/SETDOWN) of the auto move to be performed is highlighted in green on the MOVE INFORMATION section of the screen. The requested location along with its bridge and trolley coordinates are displayed in a box on the bottom of the screen.

4.7.9 IF it is desired to select a particular step in the move sequence, THEN touch "SELECT NEW STEP NUMBER" AND enter desired step on the keypad screen.

4.7.10 IF it is desired to increment to the SETDOWN portion of a step OR the PICKUP portion of the next step in the sequence, THEN touch "INCREMENT STEP".

4.7.11 IF requested location is correct, THEN touch "VERIFY"; OTHERWISE return to step 4.7.9.

4.7.12 Touch "AUTO RUN" to initiate Refueling Platform movement.

4.8 Pickup Location - Fuel Pool Storage Rack

4.8.1 Position Refuel Platform Mast over desired core component in accordance with Core Component Transfer Authorization Sheet (CCTAS).

4.8.2 Lower hoist until grapple is 6 to 12 inches above bail.

4.8.3 Verify grapple is open.

4.8.4 Rotate grapple as necessary to achieve grapple to bail alignment.

4.8.5 Slowly lower hoist until "SLACK CABLE" light is lit.

NOTE

Steps 4.8.6 through 4.8.9 shall be double verified by the Fuel Handling Director (FHD) and Refuel Platform Operator (RPO) OR Fuel Handling Director and Spotter.

4.8.6 Verify proper core component location and orientation.

4.8.7 Verify the following, THEN inform FHD of grapple position.

4.8.7.1 Grapple is centered over bail handle

4.8.7.2 Hoist position indication agrees with Attachment 9 for item seated in Fuel Pool Storage Rack.

4.8.8 WHEN directed by FHD, THEN engage grapple, AND verify "GRAPPLE ENGAGED" light is lit.

4.8.9 WHEN directed by FHD, THEN slowly raise load AND verify "HOIST LOADED" light is lit (fuel only).

NOTE

WHEN accessing storage locations outside the Secure Travel Zone, use of the TRAVEL OVERRIDE push button is required to raise the hoist. Hoist slow speed zone near Normal Up will NOT be active. IF the hoist is fuel loaded, THEN raise motion will stop automatically WHEN the selected Normal Up setpoint is reached. IF the hoist is NOT fuel loaded(empty or blade guide), THEN raise motion will NOT stop automatically WHEN the selected Normal Up setpoint is reached and must be stopped by releasing the hoist joystick. IF the joystick is NOT released, THEN the hoist will raise until the first Overhoist Backup switch stops upward motion.

4.8.10 Continue raising until grapple is fully raised, THEN verify "GRAPPLE NORMAL UP" light is lit.

4.8.11 Perform appropriate "Set Down Location" subsection of this procedure as directed by FHD.

4.9 Pickup Location - Reactor Core

4.9.1 Position Refuel Platform Mast over desired core component in accordance with Core Component Transfer Authorization Sheet (CCTAS).

4.9.2 Lower hoist until grapple is 6 to 12 inches above bail.

NOTES

1. While the bridge is over the core, the grapple will only open when it is within 1 foot of the top of a bail. If the grapple is opened in the Fuel Pool it will remain open while over the core until the GRAPPLE switch is placed in the "ENGAGE" position.

2. If the GRAPPLE switch is placed in the "RELEASE" position while the bridge is over the core but the grapple is NOT within 1 foot of the top of a bail, the grapple will remain closed and the "GRAPPLE RELEASED ALARM" will sound. If the grapple is moved to within 1 ft of the top of a bail the grapple will NOT open until the switch is first placed in the "ENGAGE" position and then placed in the "RELEASE" position.

4.9.3 Verify grapple is open.

4.9.4 Rotate grapple as necessary to achieve grapple to bail alignment.

4.9.5 Slowly lower hoist until "SLACK CABLE" light is lit.

NOTE

Steps 4.9.6 through 4.9.10 (except 4.9.9) shall be double verified by the FHD and RPO OR FHD and Spotter.

4.9.6 Verify proper core component location and orientation.

4.9.7 Verify the following, THEN inform FHD of grapple position.

4.9.7.1 Grapple is centered over bail handle.

4.9.7.2 Hoist position indication agrees with Attachment 9 for item seated in core.

4.9.8 WHEN directed by FHD, THEN engage grapple, AND verify "GRAPPLE ENGAGED" light is lit.

4.9.9 IF load is a Fuel Bundle, THEN FHD shall inform Unit Reactor Operator of pending fuel removal from the core.

4.9.10 WHEN directed by FHD, THEN slowly raise load AND verify "HOIST LOADED" light is lit (fuel only).

4.9.11 Continue raising until core component is clear of core.

4.9.11.1 Verify hoist position indicates less than 355.0 inches.

4.9.11.2 Verify item is clear of top guide.

4.9.12 IF load is a Fuel Bundle, THEN FHD shall inform Unit Reactor Operator fuel bundle has cleared core.

4.9.13 IF load is to be transferred through Transfer Canal, THEN continue raising until grapple is fully raised AND verify "GRAPPLE NORMAL UP" light is lit.

4.9.14 Perform appropriate "Set Down Location" subsection of this procedure as directed by FHD.

4.10 Pickup Location - Fuel Preparation Machine

4.10.1 Verify Fuel Prep Machine carriage is fully lowered.

4.10.2 Position Refuel Platform Mast over fuel prep machine in accordance with Core Component Transfer Authorization Sheet (CCTAS).

4.10.3 Lower hoist until grapple is 6 to 12 inches above bail.

4.10.4 Verify grapple is open.

4.10.5 Rotate grapple as necessary to achieve grapple to bail alignment.

4.10.6 Slowly lower hoist until "SLACK CABLE" light is lit.

NOTE

Steps 4.10.7 through 4.10.10 shall be double verified by the FHD and RPO OR FHD and Spotter.

4.10.7 Verify proper core component location and orientation.

4.10.8 Verify the following, THEN inform FHD of grapple position.

4.10.8.1 Grapple is centered over bail handle

4.10.8.2 Hoist position indication agrees with Attachment 9 for item seated in fuel prep machine.

4.10.9 WHEN directed by FHD, THEN engage grapple, AND verify "GRAPPLE ENGAGED" light is lit.

4.10.10 WHEN directed by FHD, THEN slowly raise load AND verify "HOIST LOADED" light is lit (fuel only).

4.10.11 Continue raising until grapple is fully raised, THEN verify "GRAPPLE NORMAL UP" light is lit.

```
*****************************************************************
*                          CAUTION                              *
*                                                               *
*     Automatic modes shall NOT be used to perform moves while  *
*     mast is in a fuel preparation machine.                    *
*****************************************************************
```

4.10.12 Perform appropriate "Set Down Location" subsection of this procedure as directed by FHD.

4.11 Pickup Location - Bundle Sipping Canister

4.11.1 Verify Bundle Sipping Canister lid is open.

4.11.2 Position Refuel Platform Mast over desired Bundle Sipping Canister in accordance with Core Component Transfer Authorization Sheet (CCTAS).

4.11.3 Lower hoist until grapple is 6 to 12 inches above bail.

4.11.4 Verify grapple is open.

4.11.5 Rotate grapple as necessary to achieve grapple to bail alignment.

4.11.6 Slowly lower hoist until "SLACK CABLE" light is lit.

NOTES

1. Steps 4.11.7 through 4.11.10 shall be double verified by the FHD and RPO OR FHD and Spotter.

2. Expected hoist position is determined AND recorded on Attachment 9 by use of dummy bundle per Section 4.16.

4.11.7 Verify proper core component location and orientation.

4.11.8 Verify the following, THEN inform FHD of grapple position.

4.11.8.1 Grapple is centered over bail handle

4.11.8.2 Hoist position indication agrees with value posted on Attachment 9 for sipping canister in use.

4.11.9 WHEN directed by FHD, THEN engage grapple AND verify "GRAPPLE ENGAGED" light is lit.

****
* CAUTION *
*
* Use extreme care to avoid collision of fuel bundle *
* with open Sipping Canister lid. *
****

4.11.10 WHEN directed by FHD, THEN slowly raise load AND verify "HOIST LOADED" light is lit (fuel only).

4.11.11 Continue raising until grapple is fully raised, THEN verify "GRAPPLE NORMAL UP" light is lit.

4.11.12 Perform appropriate "Set Down Location" subsection of this procedure as directed by FHD.

4.12 Pickup Location - Spent Fuel Storage Cask

4.12.1 Position Refuel Platform Mast over desired core component in accordance with Core Component Transfer Authorization Sheet (CCTAS).

4.12.2 Lower hoist until grapple is 6 to 12 inches above bail.

4.12.3 Verify grapple is open.

4.12.4 Rotate grapple as necessary to achieve grapple to bail alignment.

4.12.5 Slowly lower hoist until "SLACK CABLE" light is lit.

> NOTE
>
> Steps 4.12.6 through 4.12.9 shall be double verified by the FHD and RPO OR FHD and Spotter.

4.12.6 Verify proper core component location and orientation.

4.12.7 Verify the following, THEN inform FHD of grapple position.

4.12.7.1 Grapple is centered over bail handle.

4.12.7.2 Hoist position indication agrees with Attachment 9 for item seated in Cask.

4.12.8 WHEN directed by FHD, THEN engage grapple, AND verify "GRAPPLE ENGAGED" light is lit.

4.12.9 WHEN directed by FHD, THEN slowly raise load AND verify "HOIST LOADED" light is lit.

4.12.10 Continue raising until grapple is fully raised, THEN verify "GRAPPLE NORMAL UP" light is lit.

4.12.11 Perform appropriate "Set Down Location" subsection of this procedure as directed by FHD.

4.13 Set Down Location - Fuel Pool Storage Rack

4.13.1 Position core component over desired location in accordance with Core Component Transfer Authorization Sheet (CCTAS).

4.13.2 Rotate core component as necessary to achieve proper orientation.

4.13.3 Perform Double Verification to ensure proper core component location and orientation.

NOTES

1. Tooling may be utilized as necessary to guide a bent channel fastener into the spent fuel rack.

2. WHEN accessing storage locations outside the Secure Travel Zone, THEN use of the TRAVEL OVERRIDE push button is required to lower OR raise the hoist. Hoist slow speed zones near rack entrance, seating AND Normal Up will NOT be active.

4.13.4 WHEN directed by FHD, THEN lower load until "SLACK CABLE" light is lit.

NOTE

Steps 4.13.5 through 4.13.7 shall be double verified by the FHD and RPO OR FHD and Spotter.

4.13.5 Verify the following, THEN inform FHD of grapple position.

4.13.5.1 Component elevation appears equivalent to other stored components in the rack.

4.13.5.2 Hoist position indication agrees with Attachment 9 for item seated in Fuel Pool Storage Rack.

4.13.6 WHEN directed by FHD, THEN release grapple, AND verify grapple is open.

4.13.7 Slowly raise hoist while verifying "HOIST LOADED" light remains OFF.

4.13.8 Record completion of component transfer on CCTAS.

4.14 Set Down Location - Reactor Core

4.14.1 Position core component over desired location in accordance with Core Component Transfer Authorization Sheet (CCTAS).

4.14.2 Lower load until hoist position indicates approximately 355 inches, THEN stop lowering.

4.14.3 Rotate core component as necessary to achieve proper orientation.

4.14.4 Perform Double Verification to ensure proper core component location and orientation.

4.14.5 IF load is a fuel bundle, THEN FHD shall inform Unit Reactor Operator of pending fuel insertion in core.

> NOTE
>
> Fuel bundle may contact CRBs at two elevations approximately 385 inches and 400 inches hoist encoder position.

4.14.6 WHEN directed by FHD, THEN lower load until "SLACK CABLE" light is lit.

> NOTE
>
> Steps 4.14.7 through 4.14.9 shall be double verified by the FHD and RPO OR FHD and Spotter.

4.14.7 Verify the following, THEN inform FHD of grapple position.

4.14.7.1 Component elevation appears equivalent to other components in the Reactor Core.

4.14.7.2 Hoist position indication agrees with Attachment 9 for item seated in Reactor Core.

4.14.8 WHEN directed by FHD, THEN release grapple, AND verify grapple is open.

4.14.9 Slowly raise hoist while verifying "HOIST LOADED" light remains OFF.

4.14.10 Record completion of component transfer on CCTAS.

4.14.11 IF load was a fuel bundle, THEN FHD shall inform Unit Reactor Operator of completion of fuel insertion in core.

4.15 Set Down Location - Fuel Preparation Machine

4.15.1 Verify Fuel Prep Machine carriage is fully lowered.

4.15.2 Position component over desired fuel prep machine in accordance with Core Component Transfer Authorization Sheet (CCTAS).

4.15.3 Rotate core component as necessary to achieve proper orientation.

4.15.4 Perform Double Verification to ensure proper core component location and orientation.

4.15.5 WHEN directed by FHD, THEN lower load until "SLACK CABLE" light is lit.

> NOTE
>
> Steps 4.15.6 through 4.15.8 shall be double verified by the FHD and RPO OR FHD and Spotter.

4.15.6 Verify Hoist position indication agrees with Attachment 9 for item seated in fuel prep machine, THEN inform FHD of grapple position.

4.15.7 WHEN directed by FHD, THEN release grapple, AND verify grapple is open.

4.15.8 Slowly raise hoist while verifying "HOIST LOADED" light remains OFF.

4.15.9 Record completion of component transfer on CCTAS.

4.16 Set Down Location - Bundle Sipping Canister

```
*****************************************************************
*                          CAUTION                              *
*                                                               *
*     Use extreme care to avoid collision of fuel bundle        *
*     with open Sipping Canister lid.                           *
*****************************************************************
```

4.16.1 Verify Bundle Sipping Canister lid is open.

> NOTE
>
> The following step determines the expected hoist position for use of sipping canisters. It shall be performed one time for each sipping canister to be used. Reactor Engineering can provide information on dummy bundle location.

4.16.2 Obtain and record hoist position of bundle seated in sipping canister.

4.16.2.1 Fuel Handling Director and Refuel Platform Operator or Spotter, verify DUMMY fuel bundle location.

4.16.2.2 Grapple and raise DUMMY bundle in accordance with Section 4.8.

4.16.2.3 Position DUMMY bundle over sipping canister and rotate bundle to achieve alignment.

4.16.2.4 WHEN directed by FHD, THEN slowly lower load until "SLACK CABLE" light is lit.

4.16.2.5 Using underwater camera, verify bundle is fully seated in sipping canister.

> NOTE
>
> The range(target hoist position) for a fuel bundle seated in a Bundle Sipping Canister(refer to Attachment 9) is calculated by subtracting 1.5 inches from, AND adding 0.5 inches to, the hoist position indication obtained below.

4.16.2.6 Record hoist position AND calculate the range for each Bundle Sipping Canister below:

SIPPING CANISTER ID/ LOCATION	HOIST POSITION INDICATION	RANGE
1. _____	_____	_____-_____
2. _____	_____	_____-_____

4.16.2.7 Perform appropriate steps in Sections 4.11 and 4.13 to store DUMMY bundle in Fuel Pool Storage Rack location in AS-FOUND position.

4.16.2.8 Record the ID/Location AND Range for each Sipping Canister on the copy of Attachment 9 posted on the Refueling Platform mast.

4.16.3 Position fuel bundle over desired bundle sipping canister in accordance with Core Component Transfer Authorization Sheet (CCTAS).

4.16.4 Rotate fuel bundle as necessary to achieve proper insertion alignment.

4.16.5 Perform Double Verification to ensure proper core component location and orientation.

4.16.6 WHEN directed by FHD, THEN lower load until "SLACK CABLE" light is lit.

NOTE

Steps 4.16.7 through 4.16.9 shall be double verified by the FHD and RPO OR FHD and Spotter.

4.16.7 Verify the following, THEN inform FHD of grapple position.

4.16.7.1 Fuel Bundle is fully seated in the Bundle Sipping Canister

4.16.7.2 Hoist position indication agrees with value posted on Attachment 9 for sipping canister in use.

4.16.8 WHEN directed by FHD, THEN release grapple, AND verify grapple is open.

4.16.9 Slowly raise hoist while verifying "HOIST LOADED" light remains OFF.

4.16.10 Record completion of component transfer on CCTAS.

4.17 Set Down Location - Spent Fuel Storage Cask

4.17.1 Position core component over desired location in accordance with Core Component Transfer Authorization Sheet(CCTAS).

4.17.2 Lower load until hoist indicates approximately 10 inches, THEN stop lowering.

4.17.3 Rotate core component as necessary to achieve proper orientation.

4.17.4 Perform double verification to ensure proper core component location AND orientation.

4.17.5 WHEN directed by FHD, THEN lower load until "SLACK CABLE" light is lit.

NOTE

Steps 4.17.6 through 4.17.8 shall be double verified by the FHD and RPO OR FHD and Spotter.

4.17.6 Verify the following, THEN inform FHD of grapple position.

4.17.6.1 Component elevation appears equivalent to other stored components in the cask.

4.17.6.2 Hoist position indication agrees with Attachment 9 for an item seated in cask.

4.17.7 WHEN directed by FHD, THEN release grapple AND verify grapple is open.

4.17.8 Slowly raise hoist while verifying "HOIST LOADED" light remains OFF.

4.17.9 Record completion of component transfer on CCTAS.

5.0 CONTROL STATIONS

5.1 20C950A, "U/2 Refueling Platform Left Hand Controller"

5.2 20C950B, "U/2 Refueling Platform Right Hand Controller"

5.3 HS-2-18-20S006, "U/2 Refueling Platform Start/Stop Station"

5.4 XC-80832 "U/2 Refueling Platform Operator Interface Console"

6.0 REFERENCES

6.1 M-1-M-631, U/2 GE Refueling Platform Instruction Manual, Volume I

6.2 M-1-M-632, U/2 GE Refueling Platform Instruction Manual, Volume II

6.3 326-P-VC-38, 39, 45, PBAPS Refueling Platform Instruction Manual Units 2 and 3

6.4 PECO Fuel Handling (FH) Procedures

6.5 10CFR50.59 Safety Evaluation for MOD P00758 Refueling Platform Controls Upgrade(ECR 98-02407)

6.6 INPO OE 7535, Failed Fuel Bundle at Oyster Creek

6.7 SIL 594, "Refuel Platform Triangular Mast Drag Loading"

6.8 ECR PB 98-02612, MOD P00758 Refueling Platform Controls Upgrade

6.9 ECR PB 99-00352, Modify Refueling Interlocks to Eliminate Main Hoist Not Normal Up Interlock

6.10 AR A1238197e01, Mod P758 Procedure Strategy Notes for SO 18.1.A-2(3)

7.0 TECHNICAL SPECIFICATION

7.1 Section 3.9.1

8.0 INTERFACING PROCEDURES

8.1 FH-6C, "Core Component Movement - Core Transfers"

8.2 FH-35, "Control of Material Movement in the Fuel Pool"

8.3 RE-C-40, "Core Component Transfer Authorization Sheet Generation and Administration"

8.4 SO 18.1.C-2, "Electrical, Mechanical and Pneumatic Alignment/Checkout of Refueling Platform"

8.5 SO 18.2.A-2, "Shutdown of Refueling Platform"

8.6 SO 18.7.G-2, "Refueling Platform Overrides and Bypasses"

8.7 SO 18.7.F-2, "Handwheel Operation of Refueling Platform Bridge, Trolleys and Hoists"

9.0 ATTACHMENTS

1. Interlock Status Display Annunciators
2. Main Screen Annunciators
3. Hoist Screen Annunciators
4. Auto Screen Annunciators
5. Hoist Condition By Elevation
6. Secure Travel Zone Description
7. Bridge And Trolley Zone Enforcement
8. Main Hoist Speed Zones
9. Hoist Encoder Position Ranges

ATTACHMENT 1

INTERLOCK STATUS DISPLAY ANNUNCIATORS

ANNUNCIATOR	INITIATING CONDITIONS	EFFECT ON OPERATIONS
ROD BLK INTERLK #1 (ROD BLOCK INTERLOCK #1)	BRIDGE NEAR OR OVER CORE AND ANY HOIST FUEL LOADED (See Note)	CONTROL ROD WITHDRAWAL BLOCK (RMCS), ROD WITHDRAW BLOCK ANNUNCIATOR - MCR, WHITE WITHDRAW PERMIT LIGHT OFF - MCR
BRIDGE REVERSE STOP #1	BRIDGE NEAR OR OVER CORE AND ANY HOIST FUEL LOADED AND NOT ALL RODS FULL IN	NO BRIDGE REVERSE MOTION
ROD BLK INTERLK #2 (ROD BLOCK INTERLOCK #2)	BRIDGE NEAR OR OVER CORE AND RX MODE SW NOT IN REFUEL OR ROD NOT SELECTED	CONTROL ROD WITHDRAWAL BLOCK (RMCS), ROD WITHDRAW BLOCK ANNUNCIATOR - MCR, WHITE WITHDRAW PERMIT LIGHT OFF - MCR
BRIDGE REVERSE STOP #2		NO BRIDGE REVERSE MOTION
FUEL HOIST INTERLK (FUEL HOIST INTERLOCK)	BRIDGE NEAR OR OVER CORE AND NOT ALL RODS FULL IN	MAIN HOIST INOPERATIVE
MONO HOIST INTERLK (MONO HOIST INTERLOCK)	BRIDGE NEAR OR OVER CORE AND NOT ALL RODS FULL IN AND APPLICABLE HOIST FUEL LOADED	MONO AUX HOIST INOPERATIVE
FRAME HOIST INTERLK (FRAME HOIST INTERLOCK)		FRAME AUX HOIST INOPERATIVE
FAULT LOCKOUT	MOTOR THERMAL OL - HOIST, BRIDGE, TROLLEY OPER CHECK TIMER - HOIST, BRIDGE, TROLLEY MOTOR DRIVE FAULT - HOIST, BRIDGE, TROLLEY ENCODER COMPARE ERROR - HOIST, BRIDGE, TROLLEY MAIN HOIST OVERSPEED PHASE LOSS MAIN CONTROL POWER OFF CABINET DOOR OPEN ON TROLLEY DECK VARIABLE SPEED SWITCHES NOT IN NEUTRAL DURING STARTUP	BRIDGE WILL NOT OPERATE NO BRIDGE, TROLLEY, HOIST MOTION GRAPPLES FAIL CLOSED
TEST IN PROG (TEST IN PROGRESS)	TEST BOX CONNECTED OR TESTING SCREEN ACTIVE	VARIABLE - DEPENDS ON TEST BUTTON POSITION
BACKUP HOIST LIMIT	MAIN HOIST TRAVEL TO APPROX. 1" ABOVE CASK LOADING NORMAL UP(OVERHOIST BACKUP SWITCH #1) OR APPROX. 11" ABOVE CASK LOADING NORMAL UP(OVERHOIST BACKUP SWITCH #2)	FURTHER MAIN HOIST RAISING PROHIBITED

NOTE: Depressing "STOP" push button with bridge near or over the core will also initiate a Rod Block Interlock #1.

ATTACHMENT 2

MAIN SCREEN ANNUNCIATORS

ANNUNCIATOR	INITIATING CONDITIONS	EFFECT ON OPERATIONS
TRAVEL OVERRIDE ACTIVATED (flashing)	TRAVEL OVERRIDE button activated	Bridge/Trolley/Hoist motion permitted at slow speed
SAFETY TRAVEL INTERLOCK	Bridge/Trolley outside Secure Travel Zone	NO Bridge/Trolley/Hoist motion
PLC OVERRIDE ACTIVE	PLC/COMPUTER OVERRIDE key switch in OVERRIDE position	All PLC functions/interlocks bypassed. Bridge/Trolley/Hoist motion at slow speed.
3" MOTION INTERLOCK HAS BEEN EXCEEDED	Bridge AND/OR Trolley moved more than 3" with the hoist lowered during component insertion	NO further motion in offending direction [TRAVEL OVERRIDE can be used to realign the Bridge/Trolley]
PHASE LOSS DETECTED	Loss of one OR more phases of incoming 480V power	NO Bridge/Trolley/Hoist motion (Will also result in a FAULT LOCKOUT)
CONSOLE TEMPERATURE ALARM	High temperature in the Trolley Control Cabinet, Trolley PLC Cabinet, OR Operator Interface Console	None - alarm only
FAULT OVERRIDE KEYSWITCH ACTIVATED (flashing)	FAULT OVERRIDE key switch turned to OVERRIDE position	Fault Lockout circuit bypassed. Fault conditions will NOT be annunciated via a FAULT LOCKOUT. However, FAULT CONDITION OVERRIDDEN annunciator will appear when a fault condition occurs.
FAULT CONDITION OVERRIDDEN	FAULT OVERRIDE key switch turned to OVERRIDE position concurrent with a valid Fault condition	Fault Lockout circuit bypassed. New fault conditions will NOT be annunciated.
SECURE TRAVEL ZONE BYPASSED (flashing)	Secure Travel Zone bypassed on UTILITIES screen	NO Secure Travel Zone enforcement
A PLC I/O FAULT HAS BEEN DETECTED	A PLC I/O module is NOT responding to commands from the CPU, OR the PLC configuration file detects a module has been removed	Variable - depends on the affected module
COMMUNICATION TO THE PLC HAS BEEN LOST	Loss of communication between the PC AND the PLC	NO further screen updates [Refueling Platform operation may continue in manual mode]
HOIST IS LOADED AND NOT AT THE CASK LOADING UP LIMIT	Bridge AND/OR trolley attempting to enter the Cask Zone when fuel loaded AND NOT at the Cask Loading Normal Up limit with Cask Loading Up Limit selected	NO Bridge/Trolley/Hoist motion

ATTACHMENT 2(cont.)

MAIN SCREEN ANNUNCIATORS

ANNUNCIATOR	INITIATING CONDITIONS	EFFECT ON OPERATIONS
ROD BLOCK INTERLOCK #1	BRIDGE NEAR OR OVER CORE AND ANY HOIST FUEL LOADED	CONTROL ROD WITHDRAWAL BLOCK (RMCS), ROD WITHDRAW BLOCK ANNUNCIATOR - MCR, WHITE WITHDRAW PERMIT LIGHT OFF - MCR
BRIDGE REVERSE STOP #1	BRIDGE NEAR OR OVER CORE AND ANY HOIST FUEL LOADED AND NOT ALL RODS FULL IN	NO BRIDGE REVERSE MOTION
ROD BLOCK INTERLOCK #2	BRIDGE NEAR OR OVER CORE AND RX MODE SW NOT IN REFUEL OR ROD NOT SELECTED	CONTROL ROD WITHDRAWAL BLOCK (RMCS), ROD WITHDRAW BLOCK ANNUNCIATOR - MCR, WHITE WITHDRAW PERMIT LIGHT OFF - MCR
BRIDGE REVERSE STOP #2	BRIDGE NEAR OR OVER CORE AND RX MODE SW NOT IN REFUEL OR ROD NOT SELECTED	NO BRIDGE REVERSE MOTION
FUEL HOIST INTERLOCK	BRIDGE NEAR OR OVER CORE AND NOT ALL RODS FULL IN	MAIN HOIST INOPERATIVE
MONO HOIST INTERLOCK	BRIDGE NEAR OR OVER CORE AND NOT ALL RODS FULL IN AND MONO HOIST FUEL LOADED	MONO AUX HOIST INOPERATIVE
FRAME HOIST INTERLOCK	BRIDGE NEAR OR OVER CORE AND NOT ALL RODS FULL IN AND FRAME HOIST FUEL LOADED	FRAME AUX HOIST INOPERATIVE
FAULT DETECTED	MOTOR THERMAL OL - HOIST, BRIDGE, TROLLEY OPER CHECK TIMER - HOIST, BRIDGE, TROLLEY MOTOR DRIVE FAULT - HOIST, BRIDGE, TROLLEY ENCODER COMPARE ERROR - HOIST, BRIDGE, TROLLEY MAIN HOIST OVERSPEED PHASE LOSS MAIN CONTROL POWER OFF CABINET DOOR OPEN ON TROLLEY DECK VARIABLE SPEED SWITCHES NOT IN NEUTRAL DURING STARTUP	BRIDGE WILL NOT OPERATE NO BRIDGE, TROLLEY, HOIST MOTION GRAPPLES FAIL CLOSED

ATTACHMENT 3

HOIST SCREEN ANNUNCIATORS

Annunciator	Initiating Conditions	Effect on Operations
TRAVEL OVERRIDE ACTIVATED (flashing)	TRAVEL OVERRIDE button activated	Bridge/Trolley/Hoist motion permitted at slow speed
SAFETY TRAVEL INTERLOCK	Bridge/Trolley outside Secure Travel Zone	NO Bridge/Trolley/Hoist motion
PLC OVERRIDE ACTIVE	PLC/COMPUTER OVERRIDE key switch in OVERRIDE position	All PLC functions/interlocks bypassed. Bridge/Trolley/Hoist motion at slow speed.
3" MOTION INTERLOCK HAS BEEN EXCEEDED	Bridge AND/OR Trolley moved more than 3" with the hoist lowered during component insertion	NO further motion in offending direction [TRAVEL OVERRIDE can be used to realign Bridge/Trolley]
PHASE LOSS DETECTED	Loss of one OR more phases of incoming 480V power	NO Bridge/Trolley/Hoist motion (Will also result in a FAULT LOCKOUT)
CONSOLE TEMPERATURE ALARM	High temperature in the Trolley Control Cabinet, Trolley PLC Cabinet, OR Operator Interface Console	None - alarm only
FAULT OVERRIDE KEYSWITCH ACTIVATED (flashing)	FAULT OVERRIDE key switch turned to OVERRIDE position	Fault Lockout circuit bypassed. Fault conditions will NOT be annunciated via a FAULT LOCKOUT. However, FAULT CONDITION OVERRIDDEN annunciator will appear when a fault condition occurs.
FAULT CONDITION OVERRIDDEN	FAULT OVERRIDE key switch turned to OVERRIDE position concurrent with a valid Fault condition	Fault Lockout circuit bypassed. New fault conditions will not be annunciated.
HOIST NOT IN PERMISSIVE ZONE	Hoist outside Secure Travel Zone	NO Hoist motion. NO Bridge/Trolley motion in offending direction.
SECURE TRAVEL ZONE BYPASSED (flashing)	Secure Travel Zone bypassed on UTILITIES screen	NO Secure Travel Zone enforcement
A PLC I/O FAULT HAS BEEN DETECTED	A PLC I/O module is NOT responding to commands from the CPU, OR the PLC configuration file detects a module has been removed	Variable - depends on the affected module
ROD BLOCK INTERLOCK #1	BRIDGE NEAR OR OVER CORE AND ANY HOIST FUEL LOADED	CONTROL ROD WITHDRAWAL BLOCK (RMCS), ROD WITHDRAW BLOCK ANNUNCIATOR - MCR, WHITE WITHDRAW PERMIT LIGHT OFF - MCR
BRIDGE REVERSE STOP #1	BRIDGE NEAR OR OVER CORE AND ANY HOIST FUEL LOADED AND NOT ALL RODS FULL IN	NO BRIDGE REVERSE MOTION
ROD BLOCK INTERLOCK #2	BRIDGE NEAR OR OVER CORE AND RX MODE SW NOT IN REFUEL OR ROD NOT SELECTED	CONTROL ROD WITHDRAWAL BLOCK (RMCS), ROD WITHDRAW BLOCK ANNUNCIATOR - MCR, WHITE WITHDRAW PERMIT LIGHT OFF - MCR
COMMUNICATION TO THE PLC HAS BEEN LOST	Loss of communication between the PC AND the PLC	NO further screen updates [Refueling Platform operation may continue in manual mode]

ATTACHMENT 3(Cont.)

HOIST SCREEN ANNUNCIATORS

Annunciator	Initiating Conditions	Effect on Operations
HOIST IS LOADED AND NOT AT THE CASK LOADING UP LIMIT	Bridge AND/OR trolley attempting to enter the Cask Zone when fuel loaded AND NOT at the Cask Loading Normal Up limit with Cask Loading Up Limit selected	NO Bridge/Trolley/Hoist motion
THERE IS A CONFLICT BETWEEN THE PLC AND EXTERNAL FUEL HOIST LOADED CONDITIONS	Set point module SP-MHL indicates main hoist is fuel loaded and analog load input to PLC indicates NOT fuel loaded, OR vice-versa	None {Evaluate operability of refueling interlocks}
GRAPPLE RELEASE INTERLOCK	Grapple switch in release position AND 1) main hoist fuel loaded, OR 2) hoist NOT within 12" of fuel seated in the core	Main hoist grapple will NOT release; GRAPPLE RELEASED ALARM will sound on Right Hand Controller.
HOIST RAISE LOCKOUT	Main hoist fuel loaded AND grapple limit switches indicate grapple open	NO main hoist raise motion
MAST ORIENTATION CONFLICT	Mast NOT oriented correctly based on fuel move sequence file AND mast orientation during component pickup, with hoist below Mast Orientation Interlock active elevation	NO main hoist lower motion
MAST ORIENTATION INTERLOCK IS BYPASSED	MAST ORIENTATION INTERLOCK is bypassed on UTILITIES screen	Mast Orientation Interlock NOT functional
BRIDGE REVERSE STOP #2	BRIDGE NEAR OR OVER CORE AND RX MODE SW NOT IN REFUEL OR ROD NOT SELECTED	NO BRIDGE REVERSE MOTION
FUEL HOIST INTERLOCK	BRIDGE NEAR OR OVER CORE AND NOT ALL RODS FULL IN	MAIN HOIST INOPERATIVE
FAULT DETECTED	MOTOR THERMAL OL - HOIST, BRIDGE, TROLLEY OPER CHECK TIMER - HOIST, BRIDGE, TROLLEY MOTOR DRIVE FAULT - HOIST, BRIDGE, TROLLEY ENCODER COMPARE ERROR - HOIST, BRIDGE, TROLLEY MAIN HOIST OVERSPEED PHASE LOSS MAIN CONTROL POWER OFF CABINET DOOR OPEN ON TROLLEY DECK VARIABLE SPEED SWITCHES NOT IN NEUTRAL DURING STARTUP	BRIDGE WILL NOT OPERATE NO BRIDGE, TROLLEY, HOIST MOTION GRAPPLES FAIL CLOSED
OVERHOIST BACKUP LIMIT #1	MAIN HOIST TRAVEL TO APPROX. 1" ABOVE CASK LOADING NORMAL UP	FURTHER MAIN HOIST RAISING PROHIBITED
OVERHOIST BACKUP LIMIT #2	MAIN HOIST TRAVEL TO APPROX. 11" ABOVE CASK LOADING NORMAL UP	FURTHER MAIN HOIST RAISING PROHIBITED
MAIN HOIST MOTION ERROR	Hoist motion was commanded in one direction AND hoist moved more than 2" from its starting point in other direction	NO hoist motion until condition acknowledged

ATTACHMENT 4

AUTO SCREEN ANNUNCIATORS

Annunciator	Initiating Conditions	Effect on Operations
YOU HAVE REQUESTED AN INVALID LOCATION	A location was requested which does NOT exist in the location database	CANNOT auto move to requested location
SEMI-AUTOMATIC IS NOT PERMISSIVE OR AUTOMATIC IS NOT PERMISSIVE	Automatic move requested which requires movement through Transfer Canal AND: 1) hoist NOT at Normal Up with grapple closed, OR 2) hoist position NOT less than 164" with grapple open	Auto move will NOT be executed
REQUEST PROHIBITED GATE IS INSTALLED	Bridge in pool AND auto move requested to core AND Refueling gate indicated as installed during LOGON	Auto move will NOT be executed

ATTACHMENT 5

HOIST CONDITION BY ELEVATION

Hoist Condition:	HOIST ENCODER VALUE:
Refueling Normal Up Limit:	0.00
Cask Loading Normal Up Limit	-6.00
Full Down Limit in Core:	553.00
Full Down Limit in Pool:	190.00
Full Down Limit at Prep Machines:	170.00
Full Down Limit in Cask area (Refueling Normal Up selected):	360.00
Full Down Limit in Cask area (Cask Loading Normal Up selected):	190.00
Set down of First Mast Section:	175.00
Set down of Second Mast Section:	372.00
Core Clear Grapple Closed:	< 355.00
Core Clear Grapple Open:	< 530.00
Racks Clear Grapple Closed:	Normal Up
Racks Clear Grapple Open:	< 164.00
Canal Clear Grapple Closed:	Normal Up
Canal Clear Grapple Open:	< 164.00
Cask Clear Fuel Loaded (Note: Only effective if Cask Loading Normal Up limit is selected):	< -6.00
Cask Clear Grapple Open:	< 164.00
Fuel entry slow zone core:	365.00 to 400.00
Fuel entry slow zone pool racks:	12.00 to 26.00
Fuel entry slow zone cask area:	14.00 to 28.00
Fuel seating slow limit core:	> 536.00
Fuel seating slow limit pool racks:	> 177.00
Fuel seating slow limit cask area (Note: Only effective if Cask Loading Normal Up limit is selected):	> 177.00
Mast Orientation Interlock Active-Core:	> 365.00
Mast Orientation Interlock Active-Pool:	> 7.00
Grapple Release Zone in Core:	> 536.00

Note: Encoder values are approximate.

ATTACHMENT 6

SECURE TRAVEL ZONE DESCRIPTION

The PLC receives inputs from the bridge, trolley and hoist encoders, TRAVEL OVERRIDE push button, and grapple open/closed indication and compares that information with the defined areas or zone.

SECURE TRAVEL ZONE

The Secure Travel Zone for the bridge and trolley consists of two zones, one slightly smaller than the other. The smaller zone is the high speed zone which allows the bridge, trolley and main hoist to operate at their designed full speeds. The larger of the zones is the slow speed zone and slows the bridge and trolley speeds to 5 FPM until the Secure Travel Zone limit is reached activating the SAFETY TRAVEL INTERLOCK which stops the refueling platform.

The TRAVEL OVERRIDE push button is to allow further travel beyond the Secure Travel Zone or to travel back into the Secure Travel Zone at maximum speed of 5 FPM.

High speed zones and slow speed zones exist in the core, Transfer Canal and Fuel Pool(see attachment 7). If, during log on, the question "IS THE REFUELING GATE INSTALLED?" is answered yes, the refueling platform will be limited to the Pool Zone. The Canal Zone will no longer be accessible from the pool.

Main Hoist permissive zone for entrance into the Transfer Canal is dependent on whether the grapple is open OR closed. IF the grapple is open, THEN the hoist position must be less than 164 inches. IF the grapple is closed, THEN the hoist must be at Normal Up position.

Bridge and trolley speed are limited to 2 FPM whenever the hoist is not at a "clear" elevation, depending on grapple status - see Attachment 5.

A zone in front of the East fuel prep machine enables the refueling bridge and trolley to drive into the prep machine WITHOUT the use of the Travel Override button. The bridge and trolley are limited to 5 FPM but the hoist may operate at 40 FPM. Travel Override is required to access the West fuel prep machine, but once in the prep zone, Travel Override is not required and bridge, trolley and hoist motion are the same as for the East prep machine.

The cask zones include the Cask Buffer Zone and the Cask Zone. They are in effect only when the Cask Loading Normal Up limit has been selected. The Cask Buffer Zone is an "L" shaped area just outside the cask pit where the racks end. Bridge and trolley motion will stop in this zone if the hoist is fuel loaded and NOT at the Cask Loading Normal Up limit. The bridge and trolley are limited to 30 FPM but the hoist may operate at 40 FPM.

The Cask Zone is still within the Pool Zone limits, with the Secure Travel Zone being defined by the Pool Zone limits. The bridge and trolley are limited to 30 FPM but the hoist may operate at 40 FPM.

ATTACHMENT 6(cont.)

HOIST AND GRAPPLE ZONES

Hoist speed is dependent on bridge and trolley position and grapple elevation. Hoist speed zones while in the Secure Travel Zone are shown on attachment 8. The hoist, while outside of the Secure Travel Zone is limited to a maximum of 10 FPM. The Grapple Full Down light will illuminate while outside of the Secure Travel Zone because the down limit is zone-dependent. The JOG LOWER speed is 2 FPM. Grapple release is prohibited if the bridge and trolley are over the core with the grapple engaged and hoist is NOT within 12 inches from the top of fuel seated in the core. This is known as the Grapple Release Zone(GRZ).

ATTACHMENT 7

BRIDGE AND TROLLEY ZONE ENFORCEMENT

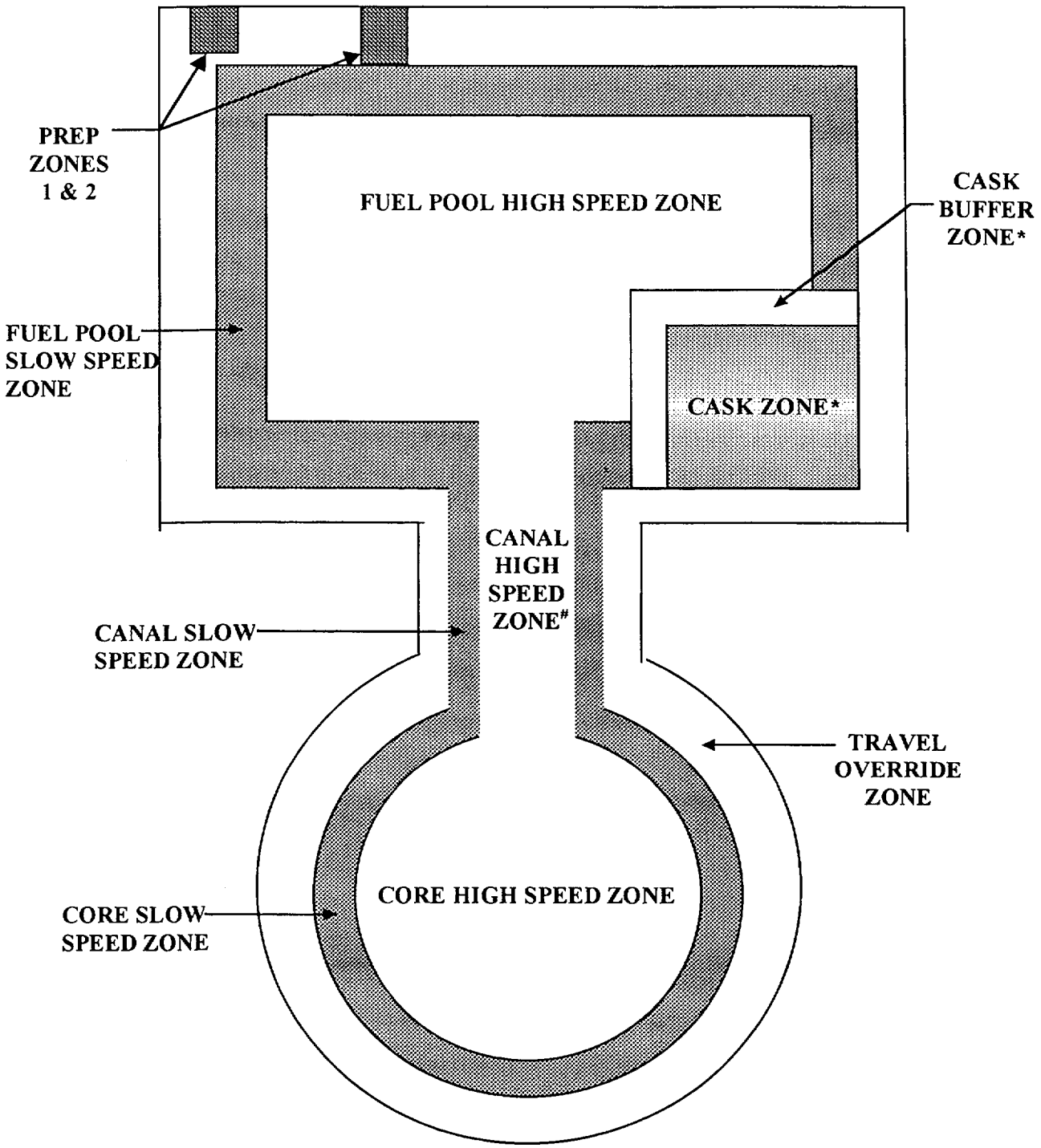

SECURE TRAVEL ZONE INCLUDES BOTH THE SLOW AND HIGH SPEED ZONES

*** IN EFFECT ONLY WHEN CASK LOADING NORMAL UP HAS BEEN SELECTED.**

 # APPLIES TO BRIDGE ONLY; TROLLEY OPERATES AT SLOW SPEED IN THIS ZONE

ATTACHMENT 8

MAIN HOIST SPEED ZONES

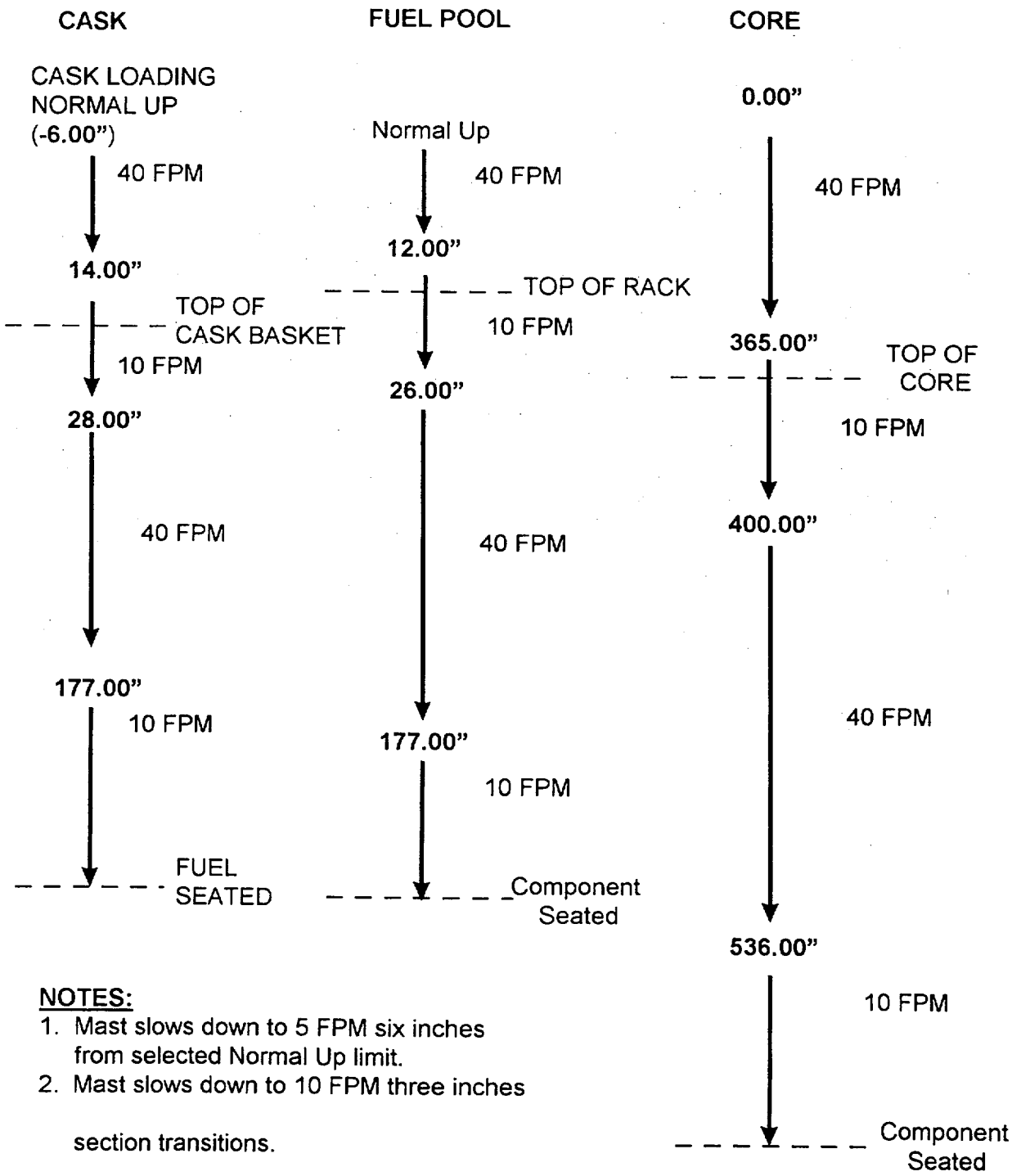

NOTES:

1. Mast slows down to 5 FPM six inches from selected Normal Up limit.
2. Mast slows down to 10 FPM three inches section transitions.

All hoist speeds indicated are at maximum joystick deflection. Actual hoist speed for a given zone is variable up to the maximum, dependent on the amount of joystick deflection. All zones are approximate encoder readings

ATTACHMENT 9

HOIST ENCODER POSITION RANGES

	Range
Fuel or SBG* Entering Rack	17.0" - 19.0"
Fuel or SBG* Seated in Rack	186.5" - 188.5"
Fuel Entering Cask	17.5" - 19.5"
Fuel Seated in Cask	183.5" - 185.5"
Fuel or SBG* Entering Core	369.0" - 371.0"
Fuel or SBG* Seated in Core	548.0" - 550.0"
DBG** Entering Rack	11.5" - 13.5"
DBG** Seated in Rack	177.5" - 184.5"
DBG** Entering Core	367.0" - 369.0"
DBG** Seated in Core	543.7" - 548.7"
DBG** Stacked in Core	As determined acceptable by FHD
Bundle in FPM (Full Down)	166.5" - 168.5"
Bundle in FPM (Full Down with GE fuel inspection fixture installed)	159.2" - 161.2"
Bottom of Cask Pit	364.5" - 366.5"
Bundle Seated in Bundle Sipping Canister:_____ ID/Location	_____" - _____"
Bundle Seated in Bundle Sipping Canister:_____ ID/Location	_____" - _____"
Permissive for entrance into Transfer Canal with grapple open	< 164.00"
Permissive for entrance into Transfer Canal with grapple closed	Normal Up

* SBG = Single Blade Guide
** DBG = Double Blade Guide

FOR TRAINING PURPOSES ONLY

PECO Energy Company
Peach Bottom Unit 3

SO 18.1.A-3 OPERATION OF REFUELING PLATFORM

1.0 PURPOSE

This provides the instruction necessary to operate the Refueling Platform Main Hoist for core component and DUMMY fuel bundle movements within the Fuel Pool and Reactor Core. This procedure shall be used in conjunction with Fuel Handling Procedure FH-6C, "Core Component Movement - Core Transfers", or FH-35, "Control of Material Movement in the Fuel Pool" as appropriate.

2.0 PREREQUISITES

2.1 IF performing transfers in the Reactor, THEN all prerequisites included in Procedure FH-6C, "Core Component Movement - Core Transfers" have been completed as appropriate.

2.2 IF performing transfers in the Fuel Pool only, THEN all prerequisites included in Procedure FH-35, "Control of Material Movement in the Fuel Pool" have been completed as appropriate.

2.3 DUMMY fuel bundle movement shall be governed by FH-35 OR FH-6C.

2.4 Refuel Platform started up AND checked out in accordance with SO 18.1.C-3, "Electrical, Mechanical and Pneumatic Alignment/Checkout of Refueling Platform." The main hoist section of the Refueling Platform Preoperational Checkoff List should be performed over the Reactor Cavity as soon as possible after core is accessible. Performing the preoperational checks in the cavity will ensure the mast will lower to the core height without binding.

2.5 IF operating in Full Automatic OR Semi-Automatic modes, THEN both Primary AND Redundant Encoders are selected for each axis on the UTILITIES screen(Ref. 6.4).

2.6 IF performing movement to OR from a Spent Fuel Storage Cask, THEN Cask Loading Normal Up limit shall be selected, OTHERWISE Refueling Normal Up limit shall be selected.

2.7 Attachment 9 of this procedure is posted on the Refueling Platform Mast.

3.0 PRECAUTIONS

3.1 WHEN operating equipment, IF it does NOT perform as expected, THEN place the equipment in a safe condition AND inform Shift Management or Fuel Handling Director(FHD).

3.2 Procedures SO 18.7.G-3, "Refueling Platform Overrides and Bypasses" and SO 18.7.F-3, "Handwheel Operation of Refueling Platform Bridge, Trolleys and Hoists" provide alternate methods for platform operation when the Refueling Platform is NOT performing as expected.

3.3 The monorail and frame mounted auxiliary hoist shall be full-up on hoist override with tools removed when not in use. Alternately, the tool and hoist cable may be stored in a safe location. Jam blocks shall be installed on aux hoist cables at all times.

3.4 Blade guides may be removed from the reactor core provided the associated control rod blade will be diagonally supported by fuel or other blade guide(s).

3.5 To prevent impact or mast/fuel assembly damage:

3.5.1 Trolley and Bridge shall always be accelerated AND decelerated slowly, avoiding sudden starts and stops.

3.5.2 Travel paths shall be clear before moving core components.

3.5.3 IF fuel OR a blade guide is grappled on the Main Hoist(grapple engaged), THEN "GRAPPLE NORMAL UP" light shall be lit before moving into Transfer Canal.

3.5.4 IF Main Hoist grapple is empty(grapple open), THEN Main Hoist position shall indicate less than 164 inches before moving into Transfer Canal.

3.5.5 Main Hoist grapple shall be in Normal Up position with "GRAPPLE NORMAL UP" light lit when not in use.

3.5.6 IF a core component is partially inserted into a location, THEN Bridge and Trolley shall only be moved using the TRAVERSE SYSTEM joystick for minor adjustments.

3.5.7 IF possible, observe channel fastener as it enters the core, fuel rack or sipping canister. To ensure channel fastener does NOT catch, push or pull mast assembly as required as bundle approaches fully seated position.

3.5.8 The following precautions apply when loading a fuel cask:

3.5.8.1 Top edge of cask fuel compartment could be damaged if impacted by a fuel bundle or weight of bundle is transferred to compartment. Use great care when aligning fuel bundle with cask opening.

3.5.8.1 Cask drain line protrudes into cask above the elevation of the fuel basket. Use great care when maneuvering bundles near the drain line as impacting drain line could cause fuel damage and/or drain line damage.

3.5.9 Use extreme caution and a slow hoist speed when handling unchanneled fuel bundles. Unchanneled bundles have the potential to twist and damage the bundle. Finger springs on the lower tie plate and fuel rod spacers may catch during bundle removal <u>OR</u> insertion.

3.6 Mast camera may impact surrounding structures when manipulating core components in the Reactor Core periphery, Fuel Pool periphery, Fuel Preparation Machine or Spent Fuel Storage Cask. Exercise caution to avoid impact damage.

3.7 <u>IF</u> during hoist operation:

3.7.1 "HOIST JAM" light comes on, <u>THEN</u> immediately stop and lower until "HOIST JAM" light goes out, <u>THEN</u> inform Fuel Handling Director for instruction.

3.7.2 "HOIST LOADED" light goes out prematurely, <u>OR</u> the load starts to lean, <u>THEN</u>:

3.7.2.1 Immediately stop lowering hoist.

3.7.2.2 Verify grapple switch is in "ENGAGE" position.

3.7.2.3 Verify "GRAPPLE ENGAGED" light is lit.

3.7.2.4 Slowly raise hoist to regain the weight of the load.

3.7.2.5 Inform Fuel Handling Director.

3.7.3 "GRAPPLE ENGAGED" light goes out unexpectedly during operation, <u>THEN</u> immediately stop and inform Fuel Handling Director

3.7.4 "HOIST LOADED" light comes on unexpectedly while raising grapple, THEN:

3.7.4.1 Immediately stop raising hoist.

3.7.4.2 Slowly lower hoist until "HOIST LOADED" light goes out.

3.7.4.3 Inform Fuel Handling Director.

3.7.5 "ROD BLK INTERLK #1" light does NOT light when refuel platform is over the core with the Main Hoist fuel loaded, THEN stop refuel platform operation AND inform Fuel Handling Director.

3.8 Fuel bundles may contact Control Rod Blades (CRB) at two elevations, approximately 385" and 400" hoist encoder position.

3.9 Prior to component handling concurrent with use of other unique equipment in the Reactor Cavity or Spent Fuel Pool, a determination should be made regarding the level of monitoring necessary to prevent contact between the equipment and the refuel platform mast, mast camera or core components suspended from the grapple.

Examples of unique equipment include in-vessel inspection or repair equipment, particularly those with umbilical cables. Depending on the risk of interference, consideration shall be given to positioning an individual on the refuel platform assigned the responsibility to monitor the position of the equipment (and umbilical if applicable) and alert Fuel Handling crew to STOP if interference is imminent.

3.10 If possible the fuel grapple shall be directly observed to be closed prior to lifting a load. Also check that the load's bail handle is inside the grapple head.

3.11 The RPO must NOT watch the hoist position indicator exclusively when a handled component is about to enter a designated location or when the empty grapple is approaching a seated component. The operator should observe component or grapple movement to avoid damage.

3.12 Peripheral fuel assemblies have a potential to miss their fuel support and seat low. Use extreme caution to maintain proper alignment while inserting assembly into the core.

3.13 Fuel bundles should be seated using a constant slow hoist speed while gently shaking the mast. Extreme slow speed and the absence of vibration increases the potential for bundles to require reseating.

3.14 Extra caution should be used when handling very old bundles. Careful monitoring of hoist load should be performed during lifting to ensure failure of bundle tie rods is promptly identified. In addition, channel fasteners AND bail handles have been found bent on old bundles which can lead to difficulty seating or releasing the bundle.(Reference 6.5)

3.15 Gentle rotation of the mast in both directions should be used prior to grapple engagement to ensure the fuel grapple is centered on the bail handle. Rapid or rough rotation during this check can lead to bundle damage, particularly when moving dechanneled fuel bundles(Reference 6.5).

3.16 The Refueling Platform shall be operated at the REFUELING PLATFORM OPERATOR access level unless specified otherwise in this OR other controlling procedures.

3.17 Power is removed from the cabinet air conditioners when a FAULT LOCKOUT occurs OR the STOP push button is depressed. This may cause a "CONSOLE HIGH TEMPERATURE" alarm.

3.18 Bridge speed is limited when the Main Hoist grapple is closed(engaged) AND the Main Hoist NOT fuel loaded. In this condition the PLC logic assumes there is a single or double blade guide on the Main Hoist and limits speed to prevent excessive drag loading on the mast(Ref. 6.6).

3.19 Prior to leaving the refueling platform temporarily unattended, the platform shall be positioned as directed by the FHD and the "STOP" push button depressed. Procedure SO 18.2.A-3, "Shutdown Of Refueling Platform", shall be performed for longer periods of shutdown(e.g. lunch hour, overnight, etc.).

3.20 IF Refueling Platform power needs to be temporarily interrupted (e.g., electrical blocking for emergent repairs OR transfer to/from alternate power supply), THEN perform computer shutdown section of SO 18.2.A-3, "Shutdown of Refueling Platform" prior to interrupting power.

3.21 Deenergizing the refueling platform while over the Reactor Cavity(track switches actuated) will generate a Rod Withdrawal Block in the Main Control Room. Notify Unit Reactor Operator prior to deenergizing the refueling platform with the track switches actuated.

3.22 The touch screen on the Operator Interface Console is required to be functional in order to change configuration of certain parameters(e.g., selection of Normal Up limit, selection of encoders for each axis, modification of Secure Travel Zone to recognize Fuel Pool Gate as removed or installed) and to operate in Semi-Automatic or Full Automatic modes. If all parameters are configured as required, the touch screen is NOT required to be functional for safe refueling platform operation in manual mode. Although the screen annunciator messages will NOT be available, the corresponding conditions will be evident via other visual or functional indications.

3.23 IF power to the PLC is interrupted while operating without a functional touch screen, THEN the Fuel Pool Gate status will default to "installed" when power is restored, preventing entrance into the Transfer Canal. The PLC will also default to the Refueling Normal Up limit when power is restored.

3.24 IF the message "COMMUNICATION TO THE PLC HAS BEEN LOST" is displayed on the touch screen meaning no further screen updates are possible, THEN refueling platform operation may continue in manual mode.

3.25 The OPERATOR INTERFACE CONSOLE AND SRO Station screens may be used as an alternate to the Right Hand OR Left Hand Controllers for verification of "SLACK CABLE", "HOIST LOADED", "GRAPPLE NORMAL UP" and "GRAPPLE ENGAGED" light status.

3.26 The keyboard AND/OR mouse stored in the OPERATOR INTERFACE CONSOLE may be connected to the front of the OPERATOR INTERFACE CONSOLE and used as an alternative to the "touch" function of the touch screen.

3.27 The computer slave screen at the SRO Station is for convenience and NOT required to be operational for Refueling Platform operation.

3.28 The Mast Orientation Interlock logic is NOT required to be functional for safe Refueling Platform operation. This optional feature is only active in Full Automatic mode and is a backup to the Double Verification by the FHD and RPO OR FHD and Spotter, which is the primary means of component orientation verification. Procedure SO 18.7.G-3, "Refueling Platform Overrides and Bypasses" provides instructions necessary to bypass the Mast Orientation Interlock logic if it is NOT performing as expected.

3.29 Attachments 1 through 4 summarize Refuel Platform interlocks and annunciators, including initiating conditions and effects on the system. Some of the screen annunciators provide suggested actions based on the initiating conditions. IF any annunciators appear unexpectedly, including those with suggested actions, THEN stop platform operation AND inform FHD prior to taking any action.

3.30 Touch screen annunciators with a pink background will bring up a popup information screen when touched. Touching "ACKNOWLEDGE" will close the popup screen.

3.31 Attachments 6 through 8 provide information regarding the Secure Travel Zone, Grapple Release Zone and bridge, trolley and hoist speed zones.

3.32 A CCTAS is not required for movement of the DUMMY fuel bundle.

4.0 PERFORMANCE STEPS

NOTES

1. The performance steps section of this procedure is separated into the following subsections:

   - 4.1, Logging ON Computer
   - 4.2, Change Person Logged ON Computer
   - 4.3, Selection of Encoders for Bridge, Trolley and Hoist
   - 4.4, Selection of Normal Up Limit
   - 4.5, Loading Fuel Move Sequence From Shuffleworks
   - 4.6, Semi-Automatic Operation
   - 4.7, Full Automatic Operation
   - 4.8, Pickup Location - Fuel Pool Storage Rack
   - 4.9, Pickup Location - Reactor Core
   - 4.10, Pickup Location - Fuel Preparation Machine
   - 4.11, Pickup Location - Bundle Sipping Canister
   - 4.12, Pickup Location - Spent Fuel Storage Cask
   - 4.13, Set Down Location - Fuel Pool Storage Rack
   - 4.14, Set Down Location - Reactor Core
   - 4.15, Set Down Location - Fuel Preparation Machine
   - 4.16, Set Down Location - Bundle Sipping Canister
   - 4.17, Set Down Location - Spent Fuel Storage Cask

2. Perform applicable subsections of Section 4.0 at the direction of the FHD.

3. Refueling Platform operating mode(i.e. Manual, Semi-Automatic or Full Automatic) is NOT prescribed in the pickup/set down subsections of this procedure. Operating mode is at the discretion of the fuel handling crew.

4.1 Logging ON Computer

4.1.1 Touch "LOG ON" AND enter name.

4.1.2 IF incorrect name was entered, THEN touch "CHANGE NAME" AND enter name.

4.1.3 Touch "ENTER PASSWORD" AND enter password.

NOTE

Answering "YES" to the question "IS THE REFUELING GATE INSTALLED" modifies the Secure Travel Zone boundary to NOT allow entrance into the Transfer Canal.

4.1.4 At screen prompt "IS THE REFUELING GATE INSTALLED?", answer "YES" if either gate is installed OR "NO" if both gates are removed.

4.1.5 Verify proper access level is displayed.

4.1.6 Touch "PRESS FOR OPERATION" to display "MAIN" screen.

4.2 Change Person Logged ON Computer

4.2.1 Touch "SHOW MENU".

4.2.2 Touch "LOG OFF"

4.2.3 Touch "YES/LOG OFF".

4.2.4 New operator perform Section 4.1 of this procedure.

4.3 Selection of Encoders for Bridge, Trolley and Hoist

NOTE

This section can only be performed by personnel with FUEL HANDLING DIRECTOR access level OR higher.

4.3.1 Touch "SHOW MENU".

4.3.2 Touch "UTILITIES".

NOTE

Steps 4.3.3 through 4.3.5 apply to the Bridge, Trolley and Hoist encoders.

```
*****************************************************************
*                          CAUTION                              *
*                                                               *
*     Operation in Semi-Automatic OR Full Automatic modes       *
*     requires both Primary AND Redundant Encoders to be        *
*     selected(i.e. "0") for each axis in order to prevent      *
*     collision of the mast OR handled component in the event   *
*     a single encoder fails(Ref. 6.4).                         *
*****************************************************************
```

4.3.3 Touch screen button displaying current encoder selection for the axis to be set.

4.3.4 On the number pad enter desired encoder selection(i.e. "0", "1" OR "2").

4.3.5 Verify desired encoder selection is displayed on button.

4.3.6 Touch "RETURN TO OPERATION".

4.3.7 Perform Section 4.2 "Change Person Logged ON Computer" of this procedure to ensure operation at REFUELING PLATFORM OPERATOR access level.

4.4 Selection of Normal Up Limit

> NOTE
>
> This section can only be performed by personnel with FUEL HANDLING DIRECTOR access level OR higher.

4.4.1 Touch "SHOW MENU".

4.4.2 Touch "UTILITIES".

4.4.3 Touch "Refueling/Cask Loading" button to select appropriate Normal Up limit for the planned evolution.

4.4.4 Verify desired Normal Up Limit is displayed.

4.4.5 Touch "RETURN TO OPERATION".

4.4.6 Perform Section 4.2 "Change Person Logged ON Computer" of this procedure to ensure operation at REFUELING PLATFORM OPERATOR access level.

4.5 Loading Fuel Move Sequence From Shuffleworks

> NOTE
>
> This section can only be performed by personnel with FUEL HANDLING DIRECTOR access level OR higher.

4.5.1 Touch "SHOW MENU".

4.5.2 Touch "UTILITIES".

4.5.3 Touch "GO TO DATABASE".

4.5.4 Verify floppy disk containing the fuel move sequence has the appropriate approvals required by RE-C-40, "Core Component Transfer Authorization Sheet Generation and Administration".

4.5.5 At the OPERATOR INTERFACE CONSOLE insert the floppy disk into the computer.

4.5.6 Touch "LOAD NEW SEQUENCE FILE".

4.5.7 Select type of move sequence, i.e., SHUFFLE, OFFLOAD OR RELOAD.

4.5.8 WHEN the prompt appears "Is The New Sequence Disk in Drive A:\", THEN touch "YES".

4.5.9 WHEN file has completed loading from disk, THEN remove floppy disk.

4.5.10 Touch "Open Sequence File".

NOTE
The Shuffleworks file designates orientation as follows: 0 - NE 1 - SE 2 - SW 3 - NW

4.5.11 Verify a sample of steps against the paper copy Core Component Transfer Authorization Sheet(CCTAS).

4.5.12 Touch "Return To Control".

4.5.13 Touch "RETURN TO OPERATION".

4.5.14 Perform Section 4.2 "Change Person Logged ON Computer" of this procedure to ensure operation at REFUELING PLATFORM OPERATOR access level.

4.6 Semi-Automatic Operation

NOTES

1. The Refuel Platform computer does NOT recognize Fuel Pool Storage Rack locations outside the Secure Travel Zone, the Fuel Preparation Machines, Bundle Sipping Canisters OR Spent Fuel Storage Cask locations as valid locations for automatic moves.

2. An automatic move can be terminated at any time by performing one of the following:
   - touching "AUTO STOP" on the MAIN OR HOIST screen
   - deflecting any of the master joysticks
   - depressing "STOP" push button on START/STOP STATION
   - depressing "TRAVEL OVERRIDE" on RIGHT HAND CONTROLLER

****
* CAUTION *
*
* Operation in Semi-Automatic mode requires both Primary *
* AND Redundant Encoders to be selected for each axis in *
* order to prevent collision of the mast OR handled *
* component in the event a single encoder fails(Ref. 6.4). *
****

4.6.1 IF desired to change mode of multiple axis automatic operation, THEN perform the following; OTHERWISE continue with step 4.6.2:

4.6.1.1 Touch "SHOW MENU".

4.6.1.2 Touch "XY/XY&Z MODE ACTIVE" as necessary to select the desired mode of multiple axis automatic operation.

4.6.1.3 Touch "PRESS FOR OPERATION".

4.6.2 IF operating in the XY mode, THEN perform the following, OTHERWISE continue with step 4.6.3 of this procedure:

4.6.2.1 IF in the Fuel Pool AND grapple is released, THEN verify hoist position indicates less than 164 inches.

4.6.2.2 IF in the Fuel Pool AND grapple is engaged, THEN verify hoist is at Normal Up position.

4.6.2.3 IF above the core AND grapple is released AND the requested location will be in the core, THEN verify hoist position indicates less than 530 inches.

4.6.2.4 IF above the core AND grapple is released AND the requested location will be in the Fuel Pool, THEN verify hoist position indicates less than 164 inches.

4.6.2.5 IF above the core AND grapple is engaged AND the requested location will be in the core, THEN verify hoist position indicates less than 355 inches.

4.6.2.6 IF above the core AND grapple is engaged AND the requested location will be in the Fuel Pool, THEN verify hoist is at Normal Up position.

4.6.3 IF operating in the XY&Z mode, THEN perform the following, OTHERWISE continue with step 4.6.4 of this procedure:

4.6.3.1 IF in the Fuel Pool AND grapple is released, THEN verify hoist position indicates less than 164 inches.

4.6.3.2 IF in the Fuel Pool AND grapple is engaged, THEN verify hoist is at Normal Up position.

4.6.3.3 IF above the core AND grapple is released, THEN verify hoist position indicates less than 530 inches.

4.6.3.4 IF above the core AND grapple is engaged, THEN verify hoist position indicates less than 355 inches.

4.6.4 Verify Bridge AND Trolley are within the Secure Travel Zone.

4.6.5 Verify Bridge AND Trolley are NOT in the Transfer Canal.

4.6.6 Touch "SELECT AUTO" on the Main OR Hoist screens.

4.6.7 IF during auto move selection it is desired to return to manual operation, THEN touch "SELECT MANUAL", OTHERWISE continue with this procedure subsection.

4.6.8 Touch "Manual Step Selection Active"/ "Auto Step Selection Active" as necessary to select "Manual Step Selection Active".

4.6.9 Touch "REQUEST" AND enter the desired location on the keypad screen.

4.6.10 IF requested location is correct, THEN touch "VERIFY"; OTHERWISE return to step 4.6.9.

4.6.11 Touch "AUTO RUN" to initiate Refueling Platform movement.

4.7 Full Automatic Operation

NOTES

1. The Refuel Platform computer does NOT recognize Fuel Pool Storage Rack locations outside the Secure Travel Zone, the Fuel Preparation Machines, Bundle Sipping Canisters OR Spent Fuel Storage Cask locations as valid locations for automatic moves.

2. An automatic move can be terminated at any time by performing one of the following:
   - touching "AUTO STOP" on the MAIN OR HOIST screen
   - deflecting any of the master joysticks
   - depressing "STOP" push button on START/STOP STATION
   - depressing "TRAVEL OVERRIDE" on RIGHT HAND CONTROLLER

****
* CAUTION *
*
* Operation in Full Automatic mode requires both Primary *
* AND Redundant encoders to be selected for each axis *
* in order to prevent collision of the mast OR handled *
* component in the event a single encoder fails(Ref. 6.4). *
****

4.7.1 IF desired to change mode of multiple axis automatic operation, THEN perform the following; OTHERWISE continue with step 4.7.2:

4.7.1.1 Touch "SHOW MENU".

4.7.1.2 Touch "XY/XY&Z MODE ACTIVE" as necessary to select the desired mode of multiple axis automatic operation.

4.7.1.3 Touch "PRESS FOR OPERATION".

4.7.2 IF operating in the XY mode, THEN perform the following, OTHERWISE continue with step 4.7.3 of this procedure:

4.7.2.1 IF in the Fuel Pool AND grapple is released, THEN verify hoist position indicates less than 164 inches.

4.7.2.2 IF in the Fuel Pool AND grapple is engaged, THEN verify hoist is at Normal Up position.

4.7.2.3 IF above the core AND grapple is released AND the requested location will be in the core, THEN verify hoist position indicates less than 530 inches.

4.7.2.4 IF above the core AND grapple is released AND the requested location will be in the Fuel Pool, THEN verify hoist position indicates less than 164 inches.

4.7.2.5 IF above the core AND grapple is engaged AND the requested location will be in the core, THEN verify hoist position indicates less than 355 inches.

4.7.2.6 IF above the core AND grapple is engaged AND the requested location will be in the Fuel Pool, THEN verify hoist is at Normal Up position.

4.7.3 IF operating in the XY&Z mode, THEN perform the following, OTHERWISE continue with step 4.7.4 of this procedure:

4.7.3.1 IF in the Fuel Pool AND grapple is released, THEN verify hoist position indicates less than 164 inches.

4.7.3.2 IF in the Fuel Pool AND grapple is engaged, THEN verify hoist is at Normal Up position.

4.7.3.3 IF above the core AND grapple is released, THEN verify hoist position indicates less than 530 inches.

4.7.3.4 IF above the core AND grapple is engaged, THEN verify hoist position indicates less than 355 inches.

4.7.4 Verify Bridge AND Trolley are within the Secure Travel Zone.

4.7.5 Verify Bridge AND Trolley are NOT in the Transfer Canal.

4.7.6 Touch "SELECT AUTO" on the Main OR Hoist screens.

4.7.7 IF during auto move selection it is desired to return to manual operation, THEN touch "SELECT MANUAL", OTHERWISE continue with this procedure subsection.

4.7.8 Touch "Manual Step Selection Active"/ "Auto Step Selection Active" as necessary to select "Auto Step Selection Active".

> NOTE
>
> The selected portion(PICKUP/SETDOWN) of the auto move to be performed is highlighted in green on the MOVE INFORMATION section of the screen. The requested location along with its bridge and trolley coordinates are displayed in a box on the bottom of the screen.

4.7.9 IF it is desired to select a particular step in the move sequence, THEN touch "SELECT NEW STEP NUMBER" AND enter desired step on the keypad screen.

4.7.10 IF it is desired to increment to the SETDOWN portion of a step OR the PICKUP portion of the next step in the sequence, THEN touch "INCREMENT STEP".

4.7.11 IF requested location is correct, THEN touch "VERIFY"; OTHERWISE return to step 4.7.9.

4.7.12 Touch "AUTO RUN" to initiate Refueling Platform movement.

4.8 Pickup Location - Fuel Pool Storage Rack

4.8.1 Position Refuel Platform Mast over desired core component in accordance with Core Component Transfer Authorization Sheet (CCTAS).

4.8.2 Lower hoist until grapple is 6 to 12 inches above bail.

4.8.3 Verify grapple is open.

4.8.4 Rotate grapple as necessary to achieve grapple to bail alignment.

4.8.5 Slowly lower hoist until "SLACK CABLE" light is lit.

NOTE

Steps 4.8.6 through 4.8.9 shall be double verified by the Fuel Handling Director (FHD) and Refuel Platform Operator (RPO) OR Fuel Handling Director and Spotter.

4.8.6 Verify proper core component location and orientation.

4.8.7 Verify the following, THEN inform FHD of grapple position.

4.8.7.1 Grapple is centered over bail handle

4.8.7.2 Hoist position indication agrees with Attachment 9 for item seated in Fuel Pool Storage Rack.

4.8.8 WHEN directed by FHD, THEN engage grapple, AND verify "GRAPPLE ENGAGED" light is lit.

4.8.9 WHEN directed by FHD, THEN slowly raise load AND verify "HOIST LOADED" light is lit (fuel only).

NOTE

WHEN accessing storage locations outside the Secure Travel Zone, use of the TRAVEL OVERRIDE push button is required to raise the hoist. Hoist slow speed zone near Normal Up will NOT be active. IF the hoist is fuel loaded, THEN raise motion will stop automatically WHEN the selected Normal Up setpoint is reached. IF the hoist is NOT fuel loaded(empty or blade guide), THEN raise motion will NOT stop automatically WHEN the selected Normal Up setpoint is reached and must be stopped by releasing the hoist joystick. IF the joystick is NOT released, THEN the hoist will raise until the first Overhoist Backup switch stops upward motion.

4.8.10 Continue raising until grapple is fully raised, THEN verify "GRAPPLE NORMAL UP" light is lit.

4.8.11 Perform appropriate "Set Down Location" subsection of this procedure as directed by FHD.

4.9 Pickup Location - Reactor Core

4.9.1 Position Refuel Platform Mast over desired core component in accordance with Core Component Transfer Authorization Sheet (CCTAS).

4.9.2 Lower hoist until grapple is 6 to 12 inches above bail.

NOTES

1. While the bridge is over the core, the grapple will only open when it is within 1 foot of the top of a bail. If the grapple is opened in the Fuel Pool it will remain open while over the core until the GRAPPLE switch is placed in the "ENGAGE" position.

2. If the GRAPPLE switch is placed in the "RELEASE" position while the bridge is over the core but the grapple is NOT within 1 foot of the top of a bail, the grapple will remain closed and the "GRAPPLE RELEASED ALARM" will sound. If the grapple is moved to within 1 ft of the top of a bail the grapple will NOT open until the switch is first placed in the "ENGAGE" position and then placed in the "RELEASE" position.

4.9.3 Verify grapple is open.

4.9.4 Rotate grapple as necessary to achieve grapple to bail alignment.

4.9.5 Slowly lower hoist until "SLACK CABLE" light is lit.

NOTE

Steps 4.9.6 through 4.9.10 (except 4.9.9) shall be double verified by the FHD and RPO OR FHD and Spotter.

4.9.6 Verify proper core component location and orientation.

4.9.7 Verify the following, THEN inform FHD of grapple position.

4.9.7.1 Grapple is centered over bail handle.

4.9.7.2 Hoist position indication agrees with Attachment 9 for item seated in core.

4.9.8 WHEN directed by FHD, THEN engage grapple, AND verify "GRAPPLE ENGAGED" light is lit.

4.9.9 IF load is a Fuel Bundle, THEN FHD shall inform Unit Reactor Operator of pending fuel removal from the core.

4.9.10 WHEN directed by FHD, THEN slowly raise load AND verify "HOIST LOADED" light is lit (fuel only).

4.9.11 Continue raising until core component is clear of core.

4.9.11.1 Verify hoist position indicates less than 355.0 inches.

4.9.11.2 Verify item is clear of top guide.

4.9.12 IF load is a Fuel Bundle, THEN FHD shall inform Unit Reactor Operator fuel bundle has cleared core.

4.9.13 IF load is to be transferred through Transfer Canal, THEN continue raising until grapple is fully raised AND verify "GRAPPLE NORMAL UP" light is lit.

4.9.14 Perform appropriate "Set Down Location" subsection of this procedure as directed by FHD.

4.10 Pickup Location - Fuel Preparation Machine

4.10.1 Verify Fuel Prep Machine carriage is fully lowered.

4.10.2 Position Refuel Platform Mast over fuel prep machine in accordance with Core Component Transfer Authorization Sheet (CCTAS).

4.10.3 Lower hoist until grapple is 6 to 12 inches above bail.

4.10.4 Verify grapple is open.

4.10.5 Rotate grapple as necessary to achieve grapple to bail alignment.

4.10.6 Slowly lower hoist until "SLACK CABLE" light is lit.

NOTE

Steps 4.10.7 through 4.10.10 shall be double verified by the FHD and RPO OR FHD and Spotter.

4.10.7 Verify proper core component location and orientation.

4.10.8 Verify the following, THEN inform FHD of grapple position.

4.10.8.1 Grapple is centered over bail handle

4.10.8.2 Hoist position indication agrees with Attachment 9 for item seated in fuel prep machine.

4.10.9 WHEN directed by FHD, THEN engage grapple, AND verify "GRAPPLE ENGAGED" light is lit.

4.10.10 WHEN directed by FHD, THEN slowly raise load AND verify "HOIST LOADED" light is lit (fuel only).

4.10.11 Continue raising until grapple is fully raised, THEN verify "GRAPPLE NORMAL UP" light is lit.

****
* CAUTION *
*
* Automatic modes shall NOT be used to perform moves while *
* mast is in a fuel preparation machine. *
****

4.10.12 Perform appropriate "Set Down Location" subsection of this procedure as directed by FHD.

4.11 Pickup Location - Bundle Sipping Canister

4.11.1 Verify Bundle Sipping Canister lid is open.

4.11.2 Position Refuel Platform Mast over desired Bundle Sipping Canister in accordance with Core Component Transfer Authorization Sheet (CCTAS).

4.11.3 Lower hoist until grapple is 6 to 12 inches above bail.

4.11.4 Verify grapple is open.

4.11.5 Rotate grapple as necessary to achieve grapple to bail alignment.

4.11.6 Slowly lower hoist until "SLACK CABLE" light is lit.

NOTES

1. Steps 4.11.7 through 4.11.10 shall be double verified by the FHD and RPO OR FHD and Spotter.

2. Expected hoist position is determined AND recorded on Attachment 9 by use of dummy bundle per Section 4.16.

4.11.7 Verify proper core component location and orientation.

4.11.8 Verify the following, THEN inform FHD of grapple position.

4.11.8.1 Grapple is centered over bail handle

4.11.8.2 Hoist position indication agrees with value posted on Attachment 9 for sipping canister in use.

4.11.9 WHEN directed by FHD, THEN engage grapple AND verify "GRAPPLE ENGAGED" light is lit.

```
*****************************************************************
*                          CAUTION                              *
*                                                               *
*     Use extreme care to avoid collision of fuel bundle        *
*     with open Sipping Canister lid.                           *
*****************************************************************
```

4.11.10 WHEN directed by FHD, THEN slowly raise load AND verify "HOIST LOADED" light is lit (fuel only).

4.11.11 Continue raising until grapple is fully raised, THEN verify "GRAPPLE NORMAL UP" light is lit.

4.11.12 Perform appropriate "Set Down Location" subsection of this procedure as directed by FHD.

4.12 Pickup Location - Spent Fuel Storage Cask

4.12.1 Position Refuel Platform Mast over desired core component in accordance with Core Component Transfer Authorization Sheet (CCTAS).

4.12.2 Lower hoist until grapple is 6 to 12 inches above bail.

4.12.3 Verify grapple is open.

4.12.4 Rotate grapple as necessary to achieve grapple to bail alignment.

4.12.5 Slowly lower hoist until "SLACK CABLE" light is lit.

NOTE

Steps 4.12.6 through 4.12.9 shall be double verified by the FHD and RPO OR FHD and Spotter.

4.12.6 Verify proper core component location and orientation.

4.12.7 Verify the following, THEN inform FHD of grapple position.

4.12.7.1 Grapple is centered over bail handle.

4.12.7.2 Hoist position indication agrees with Attachment 9 for item seated in Cask.

4.12.8 WHEN directed by FHD, THEN engage grapple, AND verify "GRAPPLE ENGAGED" light is lit.

4.12.9 WHEN directed by FHD, THEN slowly raise load AND verify "HOIST LOADED" light is lit.

4.12.10 Continue raising until grapple is fully raised, THEN verify "GRAPPLE NORMAL UP" light is lit.

4.12.11 Perform appropriate "Set Down Location" subsection of this procedure as directed by FHD.

4.13 Set Down Location - Fuel Pool Storage Rack

4.13.1 Position core component over desired location in accordance with Core Component Transfer Authorization Sheet (CCTAS).

4.13.2 Rotate core component as necessary to achieve proper orientation.

4.13.3 Perform Double Verification to ensure proper core component location and orientation.

NOTES

1. Tooling may be utilized as necessary to guide a bent channel fastener into the spent fuel rack.

2. WHEN accessing storage locations outside the Secure Travel Zone, THEN use of the TRAVEL OVERRIDE push button is required to lower OR raise the hoist. Hoist slow speed zones near rack entrance, seating AND Normal Up will NOT be active.

4.13.4 WHEN directed by FHD, THEN lower load until "SLACK CABLE" light is lit.

NOTE

Steps 4.13.5 through 4.13.7 shall be double verified by the FHD and RPO OR FHD and Spotter.

4.13.5 Verify the following, THEN inform FHD of grapple position.

4.13.5.1 Component elevation appears equivalent to other stored components in the rack.

4.13.5.2 Hoist position indication agrees with Attachment 9 for item seated in Fuel Pool Storage Rack.

4.13.6 WHEN directed by FHD, THEN release grapple, AND verify grapple is open.

4.13.7 Slowly raise hoist while verifying "HOIST LOADED" light remains OFF.

4.13.8 Record completion of component transfer on CCTAS.

4.14 Set Down Location - Reactor Core

4.14.1 Position core component over desired location in accordance with Core Component Transfer Authorization Sheet (CCTAS).

4.14.2 Lower load until hoist position indicates approximately 355 inches, THEN stop lowering.

4.14.3 Rotate core component as necessary to achieve proper orientation.

4.14.4 Perform Double Verification to ensure proper core component location and orientation.

4.14.5 IF load is a fuel bundle, THEN FHD shall inform Unit Reactor Operator of pending fuel insertion in core.

NOTE

Fuel bundle may contact CRBs at two elevations approximately 385 inches and 400 inches hoist encoder position.

4.14.6 WHEN directed by FHD, THEN lower load until "SLACK CABLE" light is lit.

NOTE

Steps 4.14.7 through 4.14.9 shall be double verified by the FHD and RPO OR FHD and Spotter.

4.14.7 Verify the following, THEN inform FHD of grapple position.

4.14.7.1 Component elevation appears equivalent to other components in the Reactor Core.

4.14.7.2 Hoist position indication agrees with Attachment 9 for item seated in Reactor Core.

4.14.8 WHEN directed by FHD, THEN release grapple, AND verify grapple is open.

4.14.9 Slowly raise hoist while verifying "HOIST LOADED" light remains OFF.

4.14.10 Record completion of component transfer on CCTAS.

4.14.11 IF load was a fuel bundle, THEN FHD shall inform Unit Reactor Operator of completion of fuel insertion in core.

4.15 Set Down Location - Fuel Preparation Machine

4.15.1 Verify Fuel Prep Machine carriage is fully lowered.

4.15.2 Position component over desired fuel prep machine in accordance with Core Component Transfer Authorization Sheet (CCTAS).

4.15.3 Rotate core component as necessary to achieve proper orientation.

4.15.4 Perform Double Verification to ensure proper core component location and orientation.

4.15.5 WHEN directed by FHD, THEN lower load until "SLACK CABLE" light is lit.

NOTE

Steps 4.15.6 through 4.15.8 shall be double verified by the FHD and RPO OR FHD and Spotter.

4.15.6 Verify Hoist position indication agrees with Attachment 9 for item seated in fuel prep machine, THEN inform FHD of grapple position.

4.15.7 WHEN directed by FHD, THEN release grapple, AND verify grapple is open.

4.15.8 Slowly raise hoist while verifying "HOIST LOADED" light remains OFF.

4.15.9 Record completion of component transfer on CCTAS.

4.16 Set Down Location - Bundle Sipping Canister

****
* CAUTION *
*
* Use extreme care to avoid collision of fuel bundle *
* with open Sipping Canister lid. *
****

4.16.1 Verify Bundle Sipping Canister lid is open.

NOTE

The following step determines the expected hoist position for use of sipping canisters. It shall be performed one time for each sipping canister to be used. Reactor Engineering can provide information on dummy bundle location.

4.16.2 Obtain and record hoist position of bundle seated in sipping canister.

4.16.2.1 Fuel Handling Director and Refuel Platform Operator or Spotter, verify DUMMY fuel bundle location.

4.16.2.2 Grapple and raise DUMMY bundle in accordance with Section 4.8.

4.16.2.3 Position DUMMY bundle over sipping canister and rotate bundle to achieve alignment.

4.16.2.4 WHEN directed by FHD, THEN slowly lower load until "SLACK CABLE" light is lit.

4.16.2.5 Using underwater camera, verify bundle is fully seated in sipping canister.

> NOTE
>
> The range(target hoist position) for a fuel bundle seated in a Bundle Sipping Canister(refer to Attachment 9) is calculated by subtracting 1.5 inches from, AND adding 0.5 inches to, the hoist position indication obtained below.

4.16.2.6 Record hoist position AND calculate the range for each Bundle Sipping Canister below:

SIPPING CANISTER ID/ LOCATION	HOIST POSITION INDICATION	RANGE
1. _____	_____	_____-_____
2. _____	_____	_____-_____

4.16.2.7 Perform appropriate steps in Sections 4.11 and 4.13 to store DUMMY bundle in Fuel Pool Storage Rack location in AS-FOUND position.

4.16.2.8 Record the ID/Location AND Range for each Sipping Canister on the copy of Attachment 9 posted on the Refueling Platform mast.

4.16.3 Position fuel bundle over desired bundle sipping canister in accordance with Core Component Transfer Authorization Sheet (CCTAS).

4.16.4 Rotate fuel bundle as necessary to achieve proper insertion alignment.

4.16.5 Perform Double Verification to ensure proper core component location and orientation.

4.16.6 WHEN directed by FHD, THEN lower load until "SLACK CABLE" light is lit.

NOTE

Steps 4.16.7 through 4.16.9 shall be double verified by the FHD and RPO OR FHD and Spotter.

4.16.7 Verify the following, THEN inform FHD of grapple position.

4.16.7.1 Fuel Bundle is fully seated in the Bundle Sipping Canister

4.16.7.2 Hoist position indication agrees with value posted on Attachment 9 for sipping canister in use.

4.16.8 WHEN directed by FHD, THEN release grapple, AND verify grapple is open.

4.16.9 Slowly raise hoist while verifying "HOIST LOADED" light remains OFF.

4.16.10 Record completion of component transfer on CCTAS.

4.17 Set Down Location - Spent Fuel Storage Cask

4.17.1 Position core component over desired location in accordance with Core Component Transfer Authorization Sheet(CCTAS).

4.17.2 Lower load until hoist indicates approximately 10 inches, THEN stop lowering.

4.17.3 Rotate core component as necessary to achieve proper orientation.

4.17.4 Perform double verification to ensure proper core component location AND orientation.

4.17.5 WHEN directed by FHD, THEN lower load until "SLACK CABLE" light is lit.

NOTE

Steps 4.17.6 through 4.17.8 shall be double verified by the FHD and RPO OR FHD and Spotter.

4.17.6 Verify the following, THEN inform FHD of grapple position.

4.17.6.1 Component elevation appears equivalent to other stored components in the cask.

4.17.6.2 Hoist position indication agrees with Attachment 9 for an item seated in cask.

4.17.7 WHEN directed by FHD, THEN release grapple AND verify grapple is open.

4.17.8 Slowly raise hoist while verifying "HOIST LOADED" light remains OFF.

4.17.9 Record completion of component transfer on CCTAS.

5.0 CONTROL STATIONS

5.1 30C950A, "U/3 Refueling Platform Left Hand Controller"

5.2 30C950B, "U/3 Refueling Platform Right Hand Controller"

5.3 HS-3-18-30S006, "U/3 Refueling Platform Start/Stop Station"

5.4 XC-90832 "U/3 Refueling Platform Operator Interface Console"

6.0 REFERENCES

6.1 M-1-M-765, U/3 GE Refueling Platform Instruction Manual Volume I

6.2 326-P-VC-38, 39, 45, PBAPS Refueling Platform Instruction Manual Units 2 and 3

6.3 PECO Fuel Handling (FH) Procedures

6.4 10CFR50.59 Safety Evaluation for MOD P00758 Refueling Platform Controls Upgrade(ECR 98-02407)

6.5 INPO OE 7535, Failed Fuel Bundle at Oyster Creek

6.6 SIL 594, "Refuel Platform Triangular Mast Drag Loading"

6.7 ECR PB 98-02621, MOD P00758 Refueling Platform Controls Upgrade

6.8 ECR PB 99-00352, Modify Refueling Interlocks to Eliminate Main Hoist Not Normal Up Interlock

6.9 AR A1238197e01, Mod P758 Procedure Strategy Notes for SO 18.1.A-2(3)

6.10 ECR PB 01-00600, Addition of Fuel-Loaded Input to Fuel Hoist Interlock Logic - Unit 3

7.0 TECHNICAL SPECIFICATION

7.1 Section 3.9.1

8.0 INTERFACING PROCEDURES

8.1 FH-6C, "Core Component Movement - Core Transfers"

8.2 FH-35, "Control of Material Movement in the Fuel Pool"

8.3 RE-C-40, "Core Component Transfer Authorization Sheet Generation and Administration"

8.4 SO 18.1.C-3, "Electrical, Mechanical and Pneumatic Alignment/Checkout of Refueling Platform"

8.5 SO 18.2.A-3, "Shutdown of Refueling Platform"

8.6 SO 18.7.G-3, "Refueling Platform Overrides and Bypasses"

8.7 SO 18.7.F-3, "Handwheel Operation of Refueling Platform Bridge, Trolleys and Hoists"

9.0 ATTACHMENTS

1. Interlock Status Display Annunciators
2. Main Screen Annunciators
3. Hoist Screen Annunciators
4. Auto Screen Annunciators
5. Hoist Condition By Elevation
6. Secure Travel Zone Description
7. Bridge And Trolley Zone Enforcement
8. Main Hoist Speed Zones
9. Hoist Encoder Position Ranges

ATTACHMENT 1

INTERLOCK STATUS DISPLAY ANNUNCIATORS

ANNUNCIATOR	INITIATING CONDITIONS	EFFECT ON OPERATIONS
ROD BLK INTERLK #1 (ROD BLOCK INTERLOCK #1)	BRIDGE NEAR OR OVER CORE AND ANY HOIST FUEL LOADED (See Note)	CONTROL ROD WITHDRAWAL BLOCK (RMCS), ROD WITHDRAW BLOCK ANNUNCIATOR - MCR, WHITE WITHDRAW PERMIT LIGHT OFF - MCR
BRIDGE REVERSE STOP #1	BRIDGE NEAR OR OVER CORE AND ANY HOIST FUEL LOADED AND NOT ALL RODS FULL IN	NO BRIDGE REVERSE MOTION
ROD BLK INTERLK #2 (ROD BLOCK INTERLOCK #2)	BRIDGE NEAR OR OVER CORE AND RX MODE SW NOT IN REFUEL OR ROD NOT SELECTED	CONTROL ROD WITHDRAWAL BLOCK (RMCS), ROD WITHDRAW BLOCK ANNUNCIATOR - MCR, WHITE WITHDRAW PERMIT LIGHT OFF - MCR
BRIDGE REVERSE STOP #2		NO BRIDGE REVERSE MOTION
FUEL HOIST INTERLK (FUEL HOIST INTERLOCK)	BRIDGE NEAR OR OVER CORE AND MAIN HOIST FUEL LOADED AND NOT ALL RODS FULL IN	MAIN HOIST INOPERATIVE
MONO HOIST INTERLK (MONO HOIST INTERLOCK)	BRIDGE NEAR OR OVER CORE AND NOT ALL RODS FULL IN AND APPLICABLE HOIST FUEL LOADED	MONO AUX HOIST INOPERATIVE
FRAME HOIST INTERLK (FRAME HOIST INTERLOCK)		FRAME AUX HOIST INOPERATIVE
FAULT LOCKOUT	MOTOR THERMAL OL - HOIST, BRIDGE, TROLLEY OPER CHECK TIMER - HOIST, BRIDGE, TROLLEY MOTOR DRIVE FAULT - HOIST, BRIDGE, TROLLEY ENCODER COMPARE ERROR - HOIST, BRIDGE, TROLLEY MAIN HOIST OVERSPEED PHASE LOSS MAIN CONTROL POWER OFF CABINET DOOR OPEN ON TROLLEY DECK VARIABLE SPEED SWITCHES NOT IN NEUTRAL DURING STARTUP	BRIDGE WILL NOT OPERATE NO BRIDGE, TROLLEY, HOIST MOTION GRAPPLES FAIL CLOSED
TEST IN PROG (TEST IN PROGRESS)	TEST BOX CONNECTED OR TESTING SCREEN ACTIVE	VARIABLE - DEPENDS ON TEST BUTTON POSITION
BACKUP HOIST LIMIT	MAIN HOIST TRAVEL TO APPROX. 1" ABOVE CASK LOADING NORMAL UP(OVERHOIST BACKUP SWITCH #1) OR APPROX. 11" ABOVE CASK LOADING NORMAL UP(OVERHOIST BACKUP SWITCH #2)	FURTHER MAIN HOIST RAISING PROHIBITED

NOTE: Depressing "STOP" push button with bridge near or over the core will also initiate a Rod Block Interlock #1.

ATTACHMENT 2

MAIN SCREEN ANNUNCIATORS

ANNUNCIATOR	INITIATING CONDITIONS	EFFECT ON OPERATIONS
TRAVEL OVERRIDE ACTIVATED (flashing)	TRAVEL OVERRIDE button activated	Bridge/Trolley/Hoist motion permitted at slow speed
SAFETY TRAVEL INTERLOCK	Bridge/Trolley outside Secure Travel Zone	NO Bridge/Trolley/Hoist motion
PLC OVERRIDE ACTIVE	PLC/COMPUTER OVERRIDE key switch in OVERRIDE position	All PLC functions/interlocks bypassed. Bridge/Trolley/Hoist motion at slow speed.
3" MOTION INTERLOCK HAS BEEN EXCEEDED	Bridge AND/OR Trolley moved more than 3" with the hoist lowered during component insertion	NO further motion in offending direction [TRAVEL OVERRIDE can be used to realign the Bridge/Trolley]
PHASE LOSS DETECTED	Loss of one OR more phases of incoming 480V power	NO Bridge/Trolley/Hoist motion (Will also result in a FAULT LOCKOUT)
CONSOLE TEMPERATURE ALARM	High temperature in the Trolley Control Cabinet, Trolley PLC Cabinet, OR Operator Interface Console	None - alarm only
FAULT OVERRIDE KEYSWITCH ACTIVATED (flashing)	FAULT OVERRIDE key switch turned to OVERRIDE position	Fault Lockout circuit bypassed. Fault conditions will NOT be annunciated via a FAULT LOCKOUT. However, FAULT CONDITION OVERRIDDEN annunciator will appear when a fault condition occurs.
FAULT CONDITION OVERRIDDEN	FAULT OVERRIDE key switch turned to OVERRIDE position concurrent with a valid Fault condition	Fault Lockout circuit bypassed. New fault conditions will NOT be annunciated.
SECURE TRAVEL ZONE BYPASSED (flashing)	Secure Travel Zone bypassed on UTILITIES screen	NO Secure Travel Zone enforcement
A PLC I/O FAULT HAS BEEN DETECTED	A PLC I/O module is NOT responding to commands from the CPU, OR the PLC configuration file detects a module has been removed	Variable - depends on the affected module
COMMUNICATION TO THE PLC HAS BEEN LOST	Loss of communication between the PC AND the PLC	NO further screen updates [Refueling Platform operation may continue in manual mode]
HOIST IS LOADED AND NOT AT THE CASK LOADING UP LIMIT	Bridge AND/OR trolley attempting to enter the Cask Zone when fuel loaded AND NOT at the Cask Loading Normal Up limit with Cask Loading Up Limit selected	NO Bridge/Trolley/Hoist motion

ATTACHMENT 2(cont.)

MAIN SCREEN ANNUNCIATORS

ANNUNCIATOR	INITIATING CONDITIONS	EFFECT ON OPERATIONS
ROD BLOCK INTERLOCK #1	BRIDGE NEAR OR OVER CORE AND ANY HOIST FUEL LOADED	CONTROL ROD WITHDRAWAL BLOCK (RMCS), ROD WITHDRAW BLOCK ANNUNCIATOR - MCR, WHITE WITHDRAW PERMIT LIGHT OFF - MCR
BRIDGE REVERSE STOP #1	BRIDGE NEAR OR OVER CORE AND ANY HOIST FUEL LOADED AND NOT ALL RODS FULL IN	NO BRIDGE REVERSE MOTION
ROD BLOCK INTERLOCK #2	BRIDGE NEAR OR OVER CORE AND RX MODE SW NOT IN REFUEL OR ROD NOT SELECTED	CONTROL ROD WITHDRAWAL BLOCK (RMCS), ROD WITHDRAW BLOCK ANNUNCIATOR - MCR, WHITE WITHDRAW PERMIT LIGHT OFF - MCR
BRIDGE REVERSE STOP #2	BRIDGE NEAR OR OVER CORE AND RX MODE SW NOT IN REFUEL OR ROD NOT SELECTED	NO BRIDGE REVERSE MOTION
FUEL HOIST INTERLOCK	BRIDGE NEAR OR OVER CORE AND MAIN HOIST FUEL LOADED AND NOT ALL RODS FULL IN	MAIN HOIST INOPERATIVE
MONO HOIST INTERLOCK	BRIDGE NEAR OR OVER CORE AND NOT ALL RODS FULL IN AND MONO HOIST FUEL LOADED	MONO AUX HOIST INOPERATIVE
FRAME HOIST INTERLOCK	BRIDGE NEAR OR OVER CORE AND NOT ALL RODS FULL IN AND FRAME HOIST FUEL LOADED	FRAME AUX HOIST INOPERATIVE
FAULT DETECTED	MOTOR THERMAL OL - HOIST, BRIDGE, TROLLEY OPER CHECK TIMER - HOIST, BRIDGE, TROLLEY MOTOR DRIVE FAULT - HOIST, BRIDGE, TROLLEY ENCODER COMPARE ERROR - HOIST, BRIDGE, TROLLEY MAIN HOIST OVERSPEED PHASE LOSS MAIN CONTROL POWER OFF CABINET DOOR OPEN ON TROLLEY DECK VARIABLE SPEED SWITCHES NOT IN NEUTRAL DURING STARTUP	BRIDGE WILL NOT OPERATE NO BRIDGE, TROLLEY, HOIST MOTION GRAPPLES FAIL CLOSED

ATTACHMENT 3

HOIST SCREEN ANNUNCIATORS

Annunciator	Initiating Conditions	Effect on Operations
TRAVEL OVERRIDE ACTIVATED (flashing)	TRAVEL OVERRIDE button activated	Bridge/Trolley/Hoist motion permitted at slow speed
SAFETY TRAVEL INTERLOCK	Bridge/Trolley outside Secure Travel Zone	NO Bridge/Trolley/Hoist motion
PLC OVERRIDE ACTIVE	PLC/COMPUTER OVERRIDE key switch in OVERRIDE position	All PLC functions/interlocks bypassed. Bridge/Trolley/Hoist motion at slow speed.
3" MOTION INTERLOCK HAS BEEN EXCEEDED	Bridge AND/OR Trolley moved more than 3" with the hoist lowered during component insertion	NO further motion in offending direction [TRAVEL OVERRIDE can be used to realign Bridge/Trolley]
PHASE LOSS DETECTED	Loss of one OR more phases of incoming 480V power	NO Bridge/Trolley/Hoist motion (Will also result in a FAULT LOCKOUT)
CONSOLE TEMPERATURE ALARM	High temperature in the Trolley Control Cabinet, Trolley PLC Cabinet, OR Operator Interface Console	None - alarm only
FAULT OVERRIDE KEYSWITCH ACTIVATED (flashing)	FAULT OVERRIDE key switch turned to OVERRIDE position	Fault Lockout circuit bypassed. Fault conditions will NOT be annunciated via a FAULT LOCKOUT. However, FAULT CONDITION OVERRIDDEN annunciator will appear when a fault condition occurs.
FAULT CONDITION OVERRIDDEN	FAULT OVERRIDE key switch turned to OVERRIDE position concurrent with a valid Fault condition	Fault Lockout circuit bypassed. New fault conditions will not be annunciated.
HOIST NOT IN PERMISSIVE ZONE	Hoist outside Secure Travel Zone	NO Hoist motion. NO Bridge/Trolley motion in offending direction.
SECURE TRAVEL ZONE BYPASSED (flashing)	Secure Travel Zone bypassed on UTILITIES screen	NO Secure Travel Zone enforcement
A PLC I/O FAULT HAS BEEN DETECTED	A PLC I/O module is NOT responding to commands from the CPU, OR the PLC configuration file detects a module has been removed	Variable - depends on the affected module
ROD BLOCK INTERLOCK #1	BRIDGE NEAR OR OVER CORE AND ANY HOIST FUEL LOADED	CONTROL ROD WITHDRAWAL BLOCK (RMCS), ROD WITHDRAW BLOCK ANNUNCIATOR - MCR, WHITE WITHDRAW PERMIT LIGHT OFF - MCR
BRIDGE REVERSE STOP #1	BRIDGE NEAR OR OVER CORE AND ANY HOIST FUEL LOADED AND NOT ALL RODS FULL IN	NO BRIDGE REVERSE MOTION
ROD BLOCK INTERLOCK #2	BRIDGE NEAR OR OVER CORE AND RX MODE SW NOT IN REFUEL OR ROD NOT SELECTED	CONTROL ROD WITHDRAWAL BLOCK (RMCS), ROD WITHDRAW BLOCK ANNUNCIATOR - MCR, WHITE WITHDRAW PERMIT LIGHT OFF - MCR
COMMUNICATION TO THE PLC HAS BEEN LOST	Loss of communication between the PC AND the PLC	NO further screen updates [Refueling Platform operation may continue in manual mode]

ATTACHMENT 3 (Cont.)

HOIST SCREEN ANNUNCIATORS

Annunciator	Initiating Conditions	Effect on Operations
HOIST IS LOADED AND NOT AT THE CASK LOADING UP LIMIT	Bridge AND/OR trolley attempting to enter the Cask Zone when fuel loaded AND NOT at the Cask Loading Normal Up limit with Cask Loading Up Limit selected	NO Bridge/Trolley/Hoist motion
THERE IS A CONFLICT BETWEEN THE PLC AND EXTERNAL FUEL HOIST LOADED CONDITIONS	Set point module SP-MHL indicates main hoist is fuel loaded and analog load input to PLC indicates NOT fuel loaded, OR vice-versa	None [Evaluate operability of refueling interlocks]
GRAPPLE RELEASE INTERLOCK	Grapple switch in release position AND 1) main hoist fuel loaded, OR 2) hoist NOT within 12" of fuel seated in the core	Main hoist grapple will NOT release; GRAPPLE RELEASED ALARM will sound on Right Hand Controller.
HOIST RAISE LOCKOUT	Main hoist fuel loaded AND grapple limit switches indicate grapple open	NO main hoist raise motion
MAST ORIENTATION CONFLICT	Mast NOT oriented correctly based on fuel move sequence file AND mast orientation during component pickup, with hoist below Mast Orientation Interlock active elevation	NO main hoist lower motion
MAST ORIENTATION INTERLOCK IS BYPASSED	MAST ORIENTATION INTERLOCK is bypassed on UTILITIES screen	Mast Orientation Interlock NOT functional
BRIDGE REVERSE STOP #2	BRIDGE NEAR OR OVER CORE AND RX MODE SW NOT IN REFUEL OR ROD NOT SELECTED	NO BRIDGE REVERSE MOTION
FUEL HOIST INTERLOCK	BRIDGE NEAR OR OVER CORE AND MAIN HOIST FUEL LOADED AND NOT ALL RODS FULL IN	MAIN HOIST INOPERATIVE
FAULT DETECTED	MOTOR THERMAL OL - HOIST, BRIDGE, TROLLEY OPER CHECK TIMER - HOIST, BRIDGE, TROLLEY MOTOR DRIVE FAULT - HOIST, BRIDGE, TROLLEY ENCODER COMPARE ERROR - HOIST, BRIDGE, TROLLEY MAIN HOIST OVERSPEED PHASE LOSS MAIN CONTROL POWER OFF CABINET DOOR OPEN ON TROLLEY DECK VARIABLE SPEED SWITCHES NOT IN NEUTRAL DURING STARTUP	BRIDGE WILL NOT OPERATE NO BRIDGE, TROLLEY, HOIST MOTION GRAPPLES FAIL CLOSED
OVERHOIST BACKUP LIMIT #1	MAIN HOIST TRAVEL TO APPROX. 1" ABOVE CASK LOADING NORMAL UP	FURTHER MAIN HOIST RAISING PROHIBITED
OVERHOIST BACKUP LIMIT #2	MAIN HOIST TRAVEL TO APPROX. 11" ABOVE CASK LOADING NORMAL UP	FURTHER MAIN HOIST RAISING PROHIBITED
MAIN HOIST MOTION ERROR	Hoist motion was commanded in one direction AND hoist moved more than 2" from its starting point in other direction	NO hoist motion until condition acknowledged

ATTACHMENT 4

AUTO SCREEN ANNUNCIATORS

Annunciator	Initiating Conditions	Effect on Operations
YOU HAVE REQUESTED AN INVALID LOCATION	A location was requested which does NOT exist in the location database	CANNOT auto move to requested location
SEMI-AUTOMATIC IS NOT PERMISSIVE OR AUTOMATIC IS NOT PERMISSIVE	Automatic move requested which requires movement through Transfer Canal AND: 1) hoist NOT at Normal Up with grapple closed, OR 2) hoist position NOT less than 164" with grapple open	Auto move will NOT be executed
REQUEST PROHIBITED GATE IS INSTALLED	Bridge in pool AND auto move requested to core AND Refueling gate indicated as installed during LOGON	Auto move will NOT be executed

ATTACHMENT 5

HOIST CONDITION BY ELEVATION

Hoist Condition:	HOIST ENCODER VALUE:
Refueling Normal Up Limit:	0.00
Cask Loading Normal Up Limit	-6.00
Full Down Limit in Core:	553.00
Full Down Limit in Pool:	190.00
Full Down Limit at Prep Machines:	170.00
Full Down Limit in Cask area (Refueling Normal Up selected):	360.00
Full Down Limit in Cask area (Cask Loading Normal Up selected):	190.00
Set down of First Mast Section:	175.00
Set down of Second Mast Section:	372.00
Core Clear Grapple Closed:	< 355.00
Core Clear Grapple Open:	< 530.00
Racks Clear Grapple Closed:	Normal Up
Racks Clear Grapple Open:	< 164.00
Canal Clear Grapple Closed	Normal Up
Canal Clear Grapple Open	< 164.00
Cask Clear Fuel Loaded (Note: Only effective if Cask Loading Normal Up limit is selected.)	< -6.00
Cask Clear Grapple Open	< 164.00
Fuel entry slow zone core	365.00 to 400.00
Fuel entry slow zone pool racks	12.00 to 26.00
Fuel entry slow zone cask area	14.00 to 28.00
Fuel seating slow limit core	> 536.00
Fuel seating slow limit pool racks	> 177.00
Fuel seating slow limit cask area (Note: Only effective if Cask Loading Normal Up limit is selected.)	> 177.00
Mast Orientation Interlock Active-Core	> 365.00
Mast Orientation Interlock Active-Pool	> 7.00
Grapple Release Zone in Core	> 536.00

Note: Encoder values are approximate.

ATTACHMENT 6

SECURE TRAVEL ZONE DESCRIPTION

The PLC receives inputs from the bridge, trolley and hoist encoders, TRAVEL OVERRIDE push button, and grapple open/closed indication and compares that information with the defined areas or zone.

SECURE TRAVEL ZONE

The Secure Travel Zone for the bridge and trolley consists of two zones, one slightly smaller than the other. The smaller zone is the high speed zone which allows the bridge, trolley and main hoist to operate at their designed full speeds. The larger of the zones is the slow speed zone and slows the bridge and trolley speeds to 5 FPM until the Secure Travel Zone limit is reached activating the SAFETY TRAVEL INTERLOCK which stops the refueling platform.

The TRAVEL OVERRIDE push button is to allow further travel beyond the Secure Travel Zone or to travel back into the Secure Travel Zone at maximum speed of 5 FPM.

High speed zones and slow speed zones exist in the core, Transfer Canal and Fuel Pool(see attachment 7). If, during log on, the question "IS THE REFUELING GATE INSTALLED?" is answered yes, the refueling platform will be limited to the Pool Zone. The Canal Zone will no longer be accessible from the pool.

Main Hoist permissive zone for entrance into the Transfer Canal is dependent on whether the grapple is open or closed. If the grapple is open, then the hoist position must be less than 164 inches. If the grapple is closed, then the hoist must be at Normal Up position.

Bridge and trolley speed are limited to 2 FPM whenever the hoist is not at a "clear" elevation, depending on grapple status - see Attachment 5.

A zone in front of the East fuel prep machine enables the refueling bridge and trolley to drive into the prep machine WITHOUT the use of the Travel Override button. The bridge and trolley are limited to 5 FPM but the hoist may operate at 40 FPM. Travel Override is required to access the West fuel prep machine, but once in the prep zone, Travel Override is not required and bridge, trolley and hoist motion are the same as for the East prep machine.

The cask zones include the Cask Buffer Zone and the Cask Zone. They are in effect only when the Cask Loading Normal Up limit has been selected. The Cask Buffer Zone is an "L" shaped area just outside the cask pit where the racks end. Bridge and trolley motion will stop in this zone if the hoist is fuel loaded and NOT at the Cask Loading Normal Up limit. The bridge and trolley are limited to 30 FPM but the hoist may operate at 40 FPM.

The Cask Zone is still within the Pool Zone limits, with the Secure Travel Zone being defined by the Pool Zone limits. The bridge and trolley are limited to 30 FPM but the hoist may operate at 40 FPM.

ATTACHMENT 6(cont.)

HOIST AND GRAPPLE ZONES

Hoist speed is dependent on bridge and trolley position and grapple elevation. Hoist speed zones while in the Secure Travel Zone are shown on attachment 8. The hoist, while outside of the Secure Travel Zone is limited to a maximum of 10 FPM. The Grapple Full Down light will illuminate while outside of the Secure Travel Zone because the down limit is zone-dependent. The JOG LOWER speed is 2 FPM. Grapple release is prohibited if the bridge and trolley are over the core with the grapple engaged and hoist is NOT within 12 inches from the top of fuel seated in the core. This is known as the Grapple Release Zone(GRZ).

ATTACHMENT 7

BRIDGE AND TROLLEY ZONE ENFORCEMENT

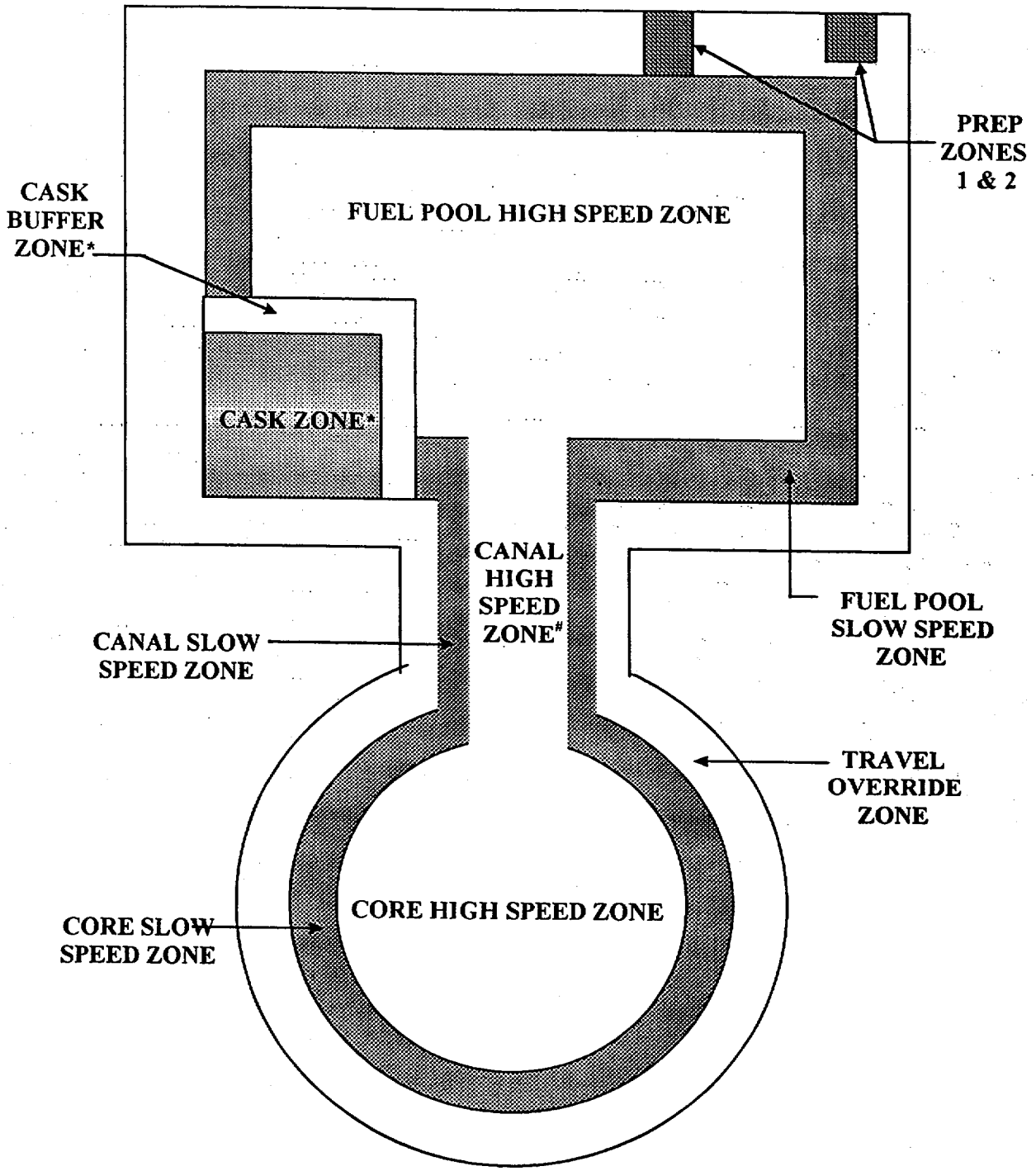

SECURE TRAVEL ZONE INCLUDES BOTH THE SLOW AND HIGH SPEED ZONES

*** IN EFFECT ONLY WHEN CASK LOADING NORMAL UP HAS BEEN SELECTED**

 # APPLIES TO BRIDGE ONLY; TROLLEY OPERATES AT SLOW SPEED IN THIS ZONE

ATTACHMENT 8

MAIN HOIST SPEED ZONES

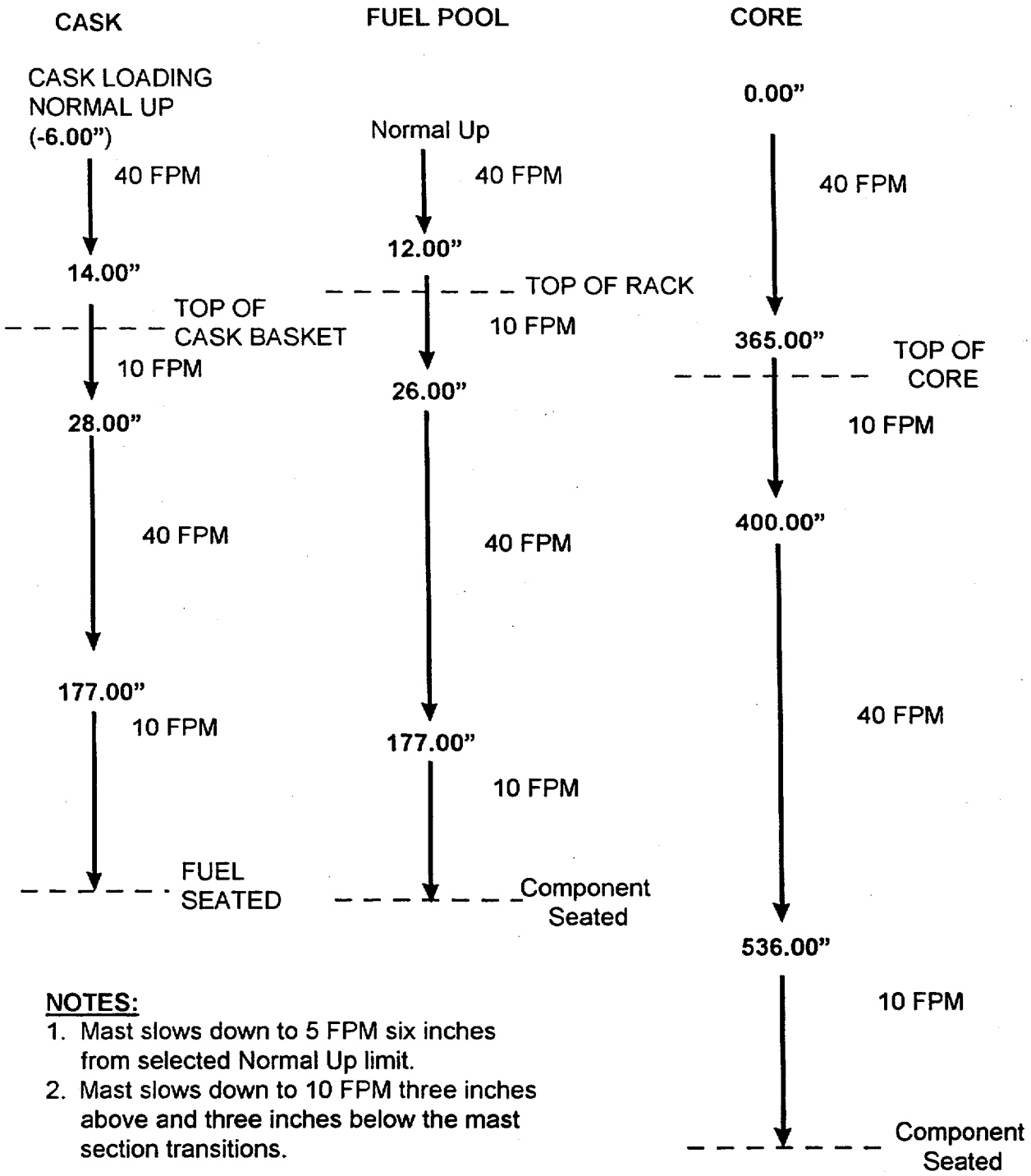

NOTES:

1. Mast slows down to 5 FPM six inches from selected Normal Up limit.
2. Mast slows down to 10 FPM three inches above and three inches below the mast section transitions.

All hoist speeds indicated are at maximum joystick deflection. Actual hoist speed for a given zone is variable up to the maximum, dependent on the amount of joystick deflection. All zones are approximate encoder readings

ATTACHMENT 9

HOIST ENCODER POSITION RANGES

	Range
Fuel or SBG* Entering Rack	17.0" - 19.0"
Fuel or SBG* Seated in Rack	186.2" - 188.2"
Fuel Entering Cask	17.5" - 19.5"
Fuel Seated in Cask	183.5" - 185.5"
Fuel or SBG* Entering Core	369.0" - 371.0"
Fuel or SBG* Seated in Core	549.2" - 551.2"
DBG** Entering Rack	11.5" - 13.5"
DBG** Seated in Rack	177.5" - 184.5"
DBG** Entering Core	367.0" - 369.0"
DBG** Seated in Core	543.7" - 548.7"
DBG** Stacked in Core	As determined acceptable by FHD
Bundle in FPM (Full Down)	166.5" - 168.5"
Bundle in FPM (Full Down with GE fuel inspection fixture installed)	159.2" - 161.2"
Bottom of Cask Pit	364.5" - 366.5"
Bundle Seated in Bundle Sipping Canister:_____ ID/Location	_____" - _____"
Bundle Seated in Bundle Sipping Canister:_____ ID/Location	_____" - _____"
Permissive for entrance into Transfer Canal with grapple open	< 164.00"
Permissive for entrance into Transfer Canal with grapple closed	Normal Up

* SBG = Single Blade Guide
** DBG = Double Blade Guide

Exelon Nuclear
Peach Bottom Units 2 and 3

FH-6C CORE COMPONENT MOVEMENT - CORE TRANSFERS

1.0 PURPOSE

Provides instructions and requirements for the performance of core component movement between the Reactor Cavity and Spent Fuel Pool. This procedure also provides controls for movement of loads over fuel. Core component or load movement over fuel within the fuel pool only is governed by FH-35.

This procedure establishes:

- The necessary conditions for core component movement or movement of loads over fuel
- Concerns to be considered during core alterations

2.0 SCOPE

This procedure provides precautions, limitations and responsibilities to perform core component movement or load handling over fuel during a refueling outage. All core component movements are also controlled by other procedures (e.g. SO 18 series, M-C- series).

3.0 REFERENCES

3.1 FSAR Appendix B, "Technical Specifications and Bases"

3.2 GEK 9684, Volume VI, "Services and Handling Equipment"

3.3 Safety Evaluation for "MOD 1140-Fuel Storage Capacity Increase"

3.4 A-C-44, "Special Nuclear Material Accounting"

3.5 A-C-33, "Nuclear Generation Group Process for Verification of Quality"

3.6 A-C-130, "Fuel Floor Foreign Material Exclusion"

3.7 A-C-190, "Control of Heavy Loads"

3.8 FH-35, "Control of Material Movement in the Fuel Pool"

3.9 GP-6, "Refueling Operations"

3.10 GP-11.C, "Special Operations"

3.11 GP-12, "Core Cooling Procedure"

3.12 HP-C-310, "Access Control Program"

3.13 M-C-741-301, "Control Rod Blade, Fuel Support and Control Rod Guide Tube Removal and Installation"

3.14 M-C-774-010, "LPRM / SRM, IRM, WRNM Replacement"

3.15 M-C-797-005, "Refueling Platform Operational Check Over Fuel Pool"

3.16 SO 18.1.C-2(3), "Electrical, Mechanical And Pneumatic Alignment/Checkout Of Refueling Platform"

3.17 M-C-797-008, "Fuel Preparation Machine Maintenance"

3.18 M-C-797-020, "Core Verification"

3.19 Nuclear Operations Manual, NOM-C-1.3, 4.1, 9.2

3.20 ON-124, "Fuel Floor and Fuel Handling Problems/Procedure"

3.21 RE-C-40, "Core Component Transfer Authorization Sheet Generation and Administration"

3.22 RE-C-044, "Accountability and Control of SNM"

3.23 SI2(3)N-60C -WRNM-A(B)4FM, "Wide Range Neutron Monitor "A"("B") Functional Check"

3.24 SI2(3)N-60C-WRNM-A(-H)1C2, "Wide Range Neutron Monitor A(-H) Cal Functional Check"

3.25 SI2(3)N-60C-WRNM-A(-H)1MX, "Wide Range Neutron Monitor A(-H) Signal to Noise Ratio Check"

3.26 SO 18.1.A-2(3), "Operation of Refueling Platform"

3.27 ST-O-003-465-2(3), "Control Rod Withdraw Tests"

3.28 ST-O-003-950-2(3), "Verification of Special Operations Surveillance Requirements SR 3.10.6"

3.29 ST-O-018-120-2(3), "Refueling Interlocks Functional Test with the Ability to Move Control Rods"

3.30 ST-O-018-125-2(3), "Refueling Interlocks Functional Test with the Inability to Move Control Rods"

3.31 CM-1, Letter from G.A. Hunger dated Sept. 29, 1994 Transmitting TSCR 93-16 (T03802)

3.32 Event Invest 2-91-062

3.33 CM-3, EPRI NSAC 164L "Guidelines for BWR Reactivity Control During Refueling", April 1992. (A/R A0787566)

3.34 CM-4, Letter from G.A. Hunger dated Sept. 29, 1994 Transmitting TSCR 93-16 (T03688)

3.35 CM-5, Letter from G.A. Hunger dated Sept. 29, 1994 Transmitting TSCR 93-16 (T03687)

3.36 CM-6, Letter from G.A. Hunger dated Sept. 29, 1994 Transmitting TSCR 93-16 (T03766)

3.37 CM-7, Ltr to NRC, 7/26/77 (T01852)

3.38 CM-8, NRC Commitment 85-12/12 per NRC Violation 82-09-02 (T03193)

3.39 CM-9, Letter from G.A. Hunger dated Sept. 29, 1994 Transmitting TSCR 93-16 (T03798, T03799)

3.40 CM-10, GE SIL No. 406, "In-Core Instrumentation Protection" (T03253)

3.41 CM-11 NRC Bulletin 88-09 (T00514)

3.42 CM-12 Event INV 2-91-065 (T02071)

3.43 CM-13, PBAPS CAR Q0001882, "Fuel Movement Restriction Accountability Requirements" (A/R A0005476)

3.44 CM-14, PBAPS CAR Q0001880, "Inadequate Double Verification Requirements" (A/R A0005476)

3.45 CM-15, PBAPS LER 3-83-05 (T03138)

3.46 CM-16, PEP Issue (I0001540) (T03251)

3.47 CM-17, PEP Issue (I0005333)

3.48 CM-18, TSCR 93-16, Fuel Floor Crane Limits (T03777)

3.49 AR A1158987, A1159331, Response to INPO IE8834 - "Problems associated with irradiated fuel inspection activities"

3.50 PEP Issue (I0009814)

3.51 ECR PB 98-02407, MOD P00758 Refuel Platform Controls Upgrade

3.52 ECR PB 99-00352, Modifying Refueling Interlocks to Eliminate Main Hoist Not Normal Up Interlock

3.53 PEP Issue (I0010407)

3.54 ECR PB 00-01353, Calculation for Movement of Light Loads Over Irradiated Fuel

4.0 DEFINITIONS

4.1 CCTAS - Core Component Transfer Authorization Sheet - A Sequential Listing and Schedule of Core Component Moves, which may include both a paper copy and an electronic copy on disk for loading into the refuel platform computer. CCTAS's are prepared in accordance with Procedure RE-C-40. CCTAS's are required for all Core Alterations, except normal control rod stroking in accordance with ST-O-003-465-2(3), "Control Rod Withdraw Tests".

4.2 FHD - Fuel Handling Director: A Senior Licensed Operator, Senior Licensed Operator limited to fuel handling, or a Designated Alternate (DA) approved by the Plant Manager. DAs specified on the paper copy CCTAS may supervise all work within the vessel except Core Alterations as defined in Tech Specs. DAs may also supervise component moves limited to within the fuel pool. All Core Alterations must be directly supervised by a Senior Licensed Operator or Senior Licensed Operator limited to fuel handling who has no other concurrent responsibility during this operation. The FHD shall report directly to Shift Management. **CM-1**

4.3 RPO - Refueling Platform Operator: A qualified person trained to operate the bridge and bridge hoists.

4.4 RO - Reactor Operator

4.5 DOUBLE VERIFICATION - An additional level of verification of product quality by a second qualified individual, <u>witnessing events prior to or during the activity</u>, to verify simultaneously that a specific condition exists.

4.6 Core Alteration - The movement of any fuel, sources, or reactivity control components within the reactor vessel with the vessel head removed and fuel in the vessel. The following exceptions are <u>NOT</u> considered to be CORE ALTERATIONS:

4.6.1 Movement of wide range neutron monitors, local power range monitors, traversing incore probes, or special movable detectors (including undervessel replacement); and

4.6.2 Control Rod movement, provided there are no fuel assemblies in the associated core cell.

Suspension of CORE ALTERATIONS shall not preclude completion of movement of a component to a safe position.

4.7 Spotter - A second qualified RPO or FHD who may be assigned to the refueling platform to perform double verification functions in place of the RPO. The spotter will document his double verification in the "RPO" column of the paper copy CCTAS. An individual may be considered qualified for Spotting duties only (i.e. without being fully qualified to manipulate refueling platform controls) by NMD Supervision in accordance with applicable Training/Qualification procedures if he/she has demonstrated competency with core counting/fuel spotting.

5.0 PREREQUISITES

NOTES

1. Prerequisites designated by an asterisk (*) next to the "INITIALS" line must be verified prior to the start of Core Alterations AND each shift as part of the Fuel Handling Director shift turnover record. Other prerequisites need only be verified when this procedure is performed prior to the start of Core Alterations or when a new working copy of this procedure is initiated. Shifts may be either 8 or 12 hours long.
2. At the discretion of the Reactor Engineer, prerequisites may be omitted and designated N/A if not required.
3. The prerequisites may be signed-off in any order.
4. These prerequisites should be signed off prior to the initial movement of any core components, prior to CRB/CRD/In-Vessel maintenance and prior to movement of core components to final core configuration.

5.1 Check Unit which Core Component and Irradiated Item Movement with Core transfers is to be performed.

_____ Unit 2 _____ Unit 3 _____ FHD

5.2 Label top of cover page with scope of work to be performed (e.g. , Fuel Shuffle Part I in parallel with control rod withdrawal/uncoupling, CRB/CRD/In-Vessel maintenance, etc.) by this procedure. _____ FHD

5.3 The reactor mode switch is locked in REFUEL and key removed. _____ SMgt *

5.4 All control rods are fully inserted AND indicate "Full-In" per Tech Spec 3.9.3 AND 3.9.4 (verified by Control Room Instrumentation) except as allowed by GP-11.C and Tech Spec 3.10.6. **CM-3**

SMgt *

5.5 Prior to core reload or Core Shuffle Part 2, perform the following. Mark this step N/A if this FH-6C is NOT being used for core reload or Core Shuffle Part 2.

FHD

5.5.1 Visually verify by camera scan conducted from the refuel floor that all rods that were withdrawn for Maintenance in accordance with GP-26, "Coordination of HCU, CRB and CRD Work During a Refuel Outage", are fully inserted.

5.5.2 For GP-26 Maintenance Cells, verify PIPS reconnected in accordance with GP-26.

5.6 WRNMs are operable as required by Tech Spec 3.3.1.2 (Verified by ST-O-098-02N(D)-2(3). **CM-4, CM-5**

SMgt *

5.7 Verify the following:

> NOTE
>
> Performance of SI2(3)N-60C-WRNM-A(-H)1C2, "WRNM A(-H) Cal Functional Check" AND SI2(3)N-60C-WRNM-A(-H)1MX, "WRNM A(-H) Signal to Noise Ratio Check" can be performed in lieu of SI2(3)N-60C-WRNM-A(B)4FM".

5.7.1 SI2(3)N-60C-WRNM-A4FM (Functional and signal to noise ratio test) has been completed in accordance with SR 3.3.1.1.5, SR 3.3.1.1.6, AND SR 3.3.1.2.5.

SMgt *

5.7.2 SI2(3)N-60C-WRNM-B4FM (Functional and signal to noise ratio test) has been completed in accordance with SR 3.3.1.1.5, SR 3.3.1.1.6, AND SR 3.3.1.2.5.

SMgt *

5.8 At least 22 ft of water over the top of irradiated fuel seated in the spent fuel storage racks (water level greater than or equal to 232 ft 3 inches plant elevation) (required during movement of fuel assemblies in the spent fuel storage pool per Tech Spec 3.7.7). This prerequisite also applies to the handling of other loads over irradiated fuel seated in the spent fuel storage racks, unless an analysis has been performed justifying otherwise.

FHD *

5.9 Reactor Pressure Vessel (RPV) water level greater than or equal to 458 inches above RPV instrument zero (required during movement of irradiated fuel assemblies within the RPV, OR during movement of new fuel assemblies or handling of control rods within the RPV when irradiated fuel assemblies are seated within the RPV per Tech Spec 3.9.6). This prerequisite also applies to the handling of other loads over irradiated fuel seated in the RPV, unless an analysis has been performed justifying otherwise.

SMgt *

5.10 Main Control Room Emergency Ventilation System AND Instrumentation are in compliance with the requirements of Tech Spec 3.3.7.1, 3.7.4, AND TRMS 3.4 (required during movement of irradiated fuel assemblies in the secondary containment, during Core Alterations, OR during operations with a potential for draining the Reactor Vessel (OPDRVs)). This prerequisite also applies to the handling of other loads over irradiated fuel, unless an analysis has been performed justifying otherwise.

SMgt *

5.11 Standby gas treatment system is in compliance with the requirements of Tech Spec 3.6.4.3 (required during movement of irradiated fuel assemblies in the secondary containment, during Core Alterations, OR during OPDRVs). This prerequisite also applies to the handling of other loads over irradiated fuel, unless an analysis has been performed justifying otherwise.

SMgt *

5.12 Secondary containment, the secondary containment isolation valves, and applicable secondary containment instrumentation are in compliance with the requirements of Tech Spec 3.3.6.2, 3.6.4.1 AND 3.6.4.2. (required during the movement of irradiated fuel OR a fuel cask in secondary containment, during Core Alterations, OR during OPDRVs). At least one Reactor Building Ventilation Exhaust Fan and one Refuel Floor Ventilation Exhaust Fan must be in service to ensure the secondary containment isolation rad monitor functions are operable. This prerequisite also applies to the handling of other loads over irradiated fuel, unless an analysis has been performed justifying otherwise. **CM-6**

M *
SMgt

5.13 Electric power requirements AND electric power instrumentation requirements of Tech Spec 3.3.8.1, 3.8.2, 3.8.3, 3.8.5, 3.8.6, AND 3.8.8 are satisfied (required during movement of irradiated fuel assemblies in the secondary containment per Tech Spec 3.8.2, 3.8.5, AND 3.8.8). This prerequisite also applies to the handling of other loads over irradiated fuel, unless an analysis has been performed justifying otherwise.

M *
SMgt

5.14 Core spray and LPCI subsystems AND Emergency core cooling system instrumentation must be operable in accordance with Tech Spec 3.5.2 AND 3.3.5.1 (NOT required when the spent fuel storage pool gates are removed with water level greater than OR equal to 458 inches above reactor pressure vessel instrument zero and NO OPDRV's in progress).

M *
SMgt

5.15 Continuous communications established between control room and Refueling Platform during Core Alterations. **CM-3**

*
FHD

5.16 A job specific RWP has been issued prior to the start of any operations if required by HP-C-310.

HP
HP

5.17 A reload specific evaluation has been performed to estimate the period of maximum heat load in the fuel pool based on CCTAS schedule. The minimum cool down time, between Reactor Shutdown (MODE 3) AND initial fuel off load (MODE 5) based on the reload specific CCTAS schedule is: **CM-17**

Minimum Cooldown Time: 31 Hours

RE
RE

5.18 Verify minimum cooldown time has been satisfied.

M
SMgt

5.19 Identify the method(s) of fuel pool cooling to support fuel movement:

X 2 Fuel Pool Cooling Heat Exchangers/Pumps operating in accordance with RT-R-019-901-2(3).

____ RHR - Fuel Pool Cooling Assist Mode operating in accordance with AO 10.3-2(3)

____ RHR Shutdown Cooling (SDC) - Fuel Pool to Reactor Mode operating in accordance with AO 10.4-2(3)

____ Other approved method for maintaining Fuel Pool Temperature below 150°F. Implementing procedure(s): _____

RE
RE

NOTE
Fuel pool cooling may be temporarily out of service to support a change in system line-up for changing fuel pool cooling methods.

5.20 Verify a fuel pool cooling method specified in Step 5.19 is in service, OR if no methods are in service, THEN ensure the estimated duration for fuel pool cooling to be out of service will not result in an undesirable pool temperature. Refer to SO 19.7.A-2(3), "Loss of Fuel Pool Cooling" for estimated heat-up rates.

M *
SMgt

5.21 A reload specific evaluation has been performed of the maximum number of bundles that can be moved to the spent fuel pool in any 24 hour period from the start date identified. Otherwise, use maximum of 150 bundles per 24 hours from the start date identified. Enter Start Date and Limit on Table 1(N/A for in-vessel maintenance and Shuffle Part II).

Maximum # of bundles per 24 hours = 150

Start Date: 6/1/02 RE
RE

5.22 Copies of the appropriate CCTAS are provided at the following locations:

5.22.1 Refueling Bridge (2 copies, plus electronic disk copy if required).

5.22.2 Control Room

5.22.3 Fuel Floor Office

5.22.4 Reactor Engineering Office

RE
RE

5.22.5 Verify that the appropriate CCTAS indicates "VERIFIED" at the top of each page of component moves, AND the CCTAS cover sheet and the electronic disk copy label (if used) have been signed IAW RE-C-40.

RE
RE

5.23 IF performing Shuffle Part I/Core Offload in parallel with control rod withdrawal/uncoupling, THEN verify CCTAS does NOT move fuel into core. OTHERWISE, N/A this step.

N/A
RE

5.24 ST-O-018-120-2(3), "Refueling Interlocks Functional Test with the Ability to Move Control Rods", OR ST-O-018-125-2(3), "Refueling Interlocks Functional Test with the Inability to Move Control Rods", has been satisfied in accordance with SR 3.9.1.1.

FHD *

5.25 Refueling equipment functionally tested in accordance with M-C-797-005 (required once per outage).

NMD
NMD

5.26 Fuel preparation machines functionally tested in accordance with M-C-797-008. (Mark N/A if fuel prep machine will NOT be used).

West FPM: N/A
NMD

East FPM: N/A
NMD

5.27 Fuel preparation machines travel stop set to handle irradiated fuel in accordance with M-C-797-008. IF FPM travel stop is NOT set to handle irradiated fuel, THEN FPM shall be tagged in accordance with M-C-797-008 to NOT be used for irradiated fuel. Check one status for EACH FPM.

_____: West FPM travel stop set for irradiated fuel

_____: West FPM tagged to NOT handle irradiated fuel

_____: East FPM travel stop set for irradiated fuel

_____: East FPM tagged to NOT handle irradiated fuel

N/A
NMD

5.28 If aux hoists are to be used, jamming buttons shall be installed on the cables to limit upward movement of the cable so that the top of the grapple or tool in use remains at least 7 feet under water or as specified for use in other procedures (Mark N/A if aux hoists will NOT be used). **CM-8**

FHD

5.29 An HP qualified person is present on the refuel floor during any work in fuel pool, reactor cavity or equipment pit. **CM-8**

FHD *

5.30 All refueling platform operators are qualified to operate the refueling bridge and its hoists.

NMD

5.31 The fuel grapple hoist load switch set at less than OR equal to 1000 lbs. IF the frame-mounted auxiliary hoist OR the monorail-mounted auxiliary hoist is to be used for handling fuel with the head off the reactor vessel, THEN the load limit switch on the hoist to be used shall be set at less than OR equal to 400 lbs. Setpoints are checked by M-C-797-005. **CM-9**

NMD
NMD

NOTES

1. One recirculation pump operating at minimum speed will produce sufficient flow to cause flow induced vibration of any In-Core Instruments NOT supported on all four sides by either fuel or blade guides. **CM-10, CM-11**

2. Do NOT exceed RHR Shutdown Cooling flow rate of 6500 gpm if In-Core instrumentation is NOT supported by blade guides OR fuel bundles on all sides unless greater flow is required to maintain desired reactor water temperature below Technical Specification limits. This flow rate limitation CANNOT be met for the B AND C RHR pumps which do NOT have drag valves to throttle flow. **CM-10, CM-11**

5.32 Neither recirculation pump is operating OR all In-Core Instruments shall be continuously supported on all sides throughout the entire fuel handling evolution by either fuel or blade guides. **CM-10, CM-11**

M *
SMgt

5.33 RHR shutdown cooling in compliance with Tech Spec 3.9.7 (required with irradiated fuel in the reactor vessel).

M *
SMgt

5.34 RHR Shutdown Cooling Flow Rate does NOT exceed 6500 gpm (unless required by Reactor Water Temperature Tech Spec Limits) OR all In-Core Instruments shall be continuously supported on all sides throughout the entire fuel handling evolution by either fuel or blade guides. **CM-10, CM-11**

M *
SMgt

5.35 Moderator temperature greater than or equal to 68°F in the reactor vessel as obtained from one of the following (depending on reactor conditions), unless a cycle specific 50.59 Determination or Safety Evaluation has been performed analyzing reactor water temperature less than 68°F. If the 50.59 has been performed, reactor water temperature must be greater than or equal to the temperature recorded below. **CM-12**

- RHR Hx Inlet Temp from points 4, 10, 16, or 22 on TRS-2(3)-10-131
- Recirc Suction Temp from TR-2(3)-02-165
- Clean up bottom head drain temp from point 9 on TR-2(3)-02-3-89
- Fuel Pool Cooling Hx Inlet Temp from Point 28 on TRS-2(3)-10-131 in accordance with GP-12.

M *
SMgt

A cycle-specific 50.59 Determination or Safety Evaluation (has, has NOT) been performed AND minimum acceptable moderator temperature is 80 degrees F.

RE
RE

5.36 Verify that fuel pool markers have been correctly installed by ensuring that the rows and columns match the permanent rack labels. (Mark this step N/A if fuel pool markers have been removed from the fuel pool or are NOT being used).

FHD

5.37 Verify with NMD RSS/Rx Eng that the Fuel Pool Rack or CRB Rack locations to be used have been previously inspected for debris.

NMD

5.38 Ensure personnel barriers and safety postings are in place near skimmer surge tank lid "peninsulas" (and any other areas deemed necessary by the FHD) to limit entry into these areas when the refueling platform is in use.

FHD

5.39 Verify Refueling Normal Up limit is selected on the Refuel Platform.

FHD *

5.40 For core reload OR Core Shuffle Part 2, verify that this procedure will NOT leave current outage discharge fuel in rack rows A-G, between rack columns 25-48, inclusive (Reference 3.53). Mark this step N/A if this FH-6C is NOT being used for core reload OR Core Shuffle Part 2.

RE

5.41 Ensure signed off original up to this step of the procedure is returned to Reactor Engineering AND signed off copies are given to the Control Room AND Fuel Handling Director.

FHD

6.0 SPECIAL TOOLS

None

7.0 RESPONSIBILITIES

7.1 Fuel Handling Director (FHD)

7.1.1 Shall supervise and be ultimately responsible for all component transfers in accordance with the RE-C-40 Core Component Transfer Authorization Sheets. This includes double verification with the appropriate unit RO of correct CCTAS step, double verification with the RPO or Spotter of correct mast position prior to grappling and prior to inserting a bundle into a designated location, and documentation of the move (except for WRNM readings, date and time which are recorded on the control room copy) on the paper CCTAS. **CM-3**

7.1.2 Shall be responsible for ensuring that all procedures being used for core component movement are being complied with.

7.1.3 Ensure the refueling platform operator is qualified to operate the refueling platform.

7.1.4 Shall direct and supervise the actions of refueling platform operators.

7.1.5 Shall determine the proper corrective action if an abnormal event or instrument response occurs, and communicate this action to the fuel handling crew.

7.1.6 Shall be responsible for the completion of SO 18.1.C-2(3) Attachment 1, Refueling Platform Preoperational Checkoff List prior to initial fuel handling, daily AND prior to resumption of bridge operation if interruption of bridge operation is greater than a shift.

7.1.7 Shall be responsible for review of the prerequisites to this procedure to assure that all applicable prerequisites are met during core component movement.

7.1.8 Shall be responsible for completing the Fuel Handling Director Shift Turnover record during the core component movement activity. This checklist shall be filled out each shift change by the oncoming and off-going FHD.

7.1.9 Shall be responsible for maintaining the maximum limit of bundles specified in Step 5.21 being transferred per 24 hour period, to the fuel pool during the initial core off load or during "Part I" of a Fuel Shuffle (initial off-load of maintenance location bundles). Use Table 1 to keep track of the transfer rate. **CM-13**

7.1.10 Shall overlap during a turnover for at least 1 move or until comfortable with the situation prior to the relieved individual leaving. Turnover shall not take place in the middle of a move involving transfer of a fuel bundle or blade guide, unless warranted by extraordinary circumstances (Reference 3.50).

7.1.11 Shall direct and supervise Health Physics qualified personnel in the absence of Health Physics supervision.

7.1.12 Shall conduct, as necessary, pre-evolution briefs with fuel handling personnel to discuss work activities, procedures, and methods for verification of CCTAS moves.

7.1.13 All Core Alterations must be directly supervised by a Senior Licensed Operator OR Senior Licensed Operator limited to fuel handling who has no other concurrent responsibility during this operation. **CM-1**

7.1.14 Consider consequences of and, if appropriate, authorize release and return of refueling bridge equipment to/from an operable status in accordance with Operations Manual.

7.2 Refueling Platform Operator (RPO)

7.2.1 Shall perform all operations, under the direction of the Fuel Handling Director, required from the refueling platform which involve core component movement.

NOTE
Responsibilities listed in the next step may be performed by a Spotter as applicable.

7.2.2 Shall double verify with the FHD the correct CCTAS step and the correct mast position prior to grappling and prior to inserting a bundle into a designated location. The RPO or Spotter shall initial their paper copy of the CCTAS at move completion to indicate performance of double verification with FHD. **CM-3, CM-14**

7.2.3 Shall perform additional duties, as required, under the direction of the Fuel Handling Director.

7.2.4 Shall overlap during a turnover for at least 1 move or until comfortable with the situation prior to the relieved individual leaving. Turnover shall not take place in the middle of a move involving transfer of a fuel bundle or blade guide, unless warranted by extraordinary circumstances(Ref. 3.50).

7.3 Reactor Operator (RO)

7.3.1 Shall communicate with the refueling platform to double verify with the FHD the correct CCTAS step. Also, the RO shall communicate information on equipment, instrumentation or alarm status and maintain the applicable RE-C-40 Core Component Transfer Authorization Sheets.

NOTE

The paper copy CCTAS will provide information identifying which WRNM detector(s) is connected for each step in the core shuffle. A minus sign (-) and/or a plus sign (+)will appear on the "step no." line below the connected WRNM detector designation. The minus sign indicates a bundle being removed from the core. A plus sign indicates a bundle being inserted into the core. It is possible, but not required to be connected to both WRNM detectors in the same quadrant.

7.3.2 Shall continually observe the WRNMs during core alterations to alert the FHD of an abnormal response. The RO is responsible for documenting WRNM count rates on the paper copy CCTAS.

NOTE

If a Rod Block signal is initiated by a planned activity and the rod withdraw permissive light is continuously de-energized on Panel 20(30)C05A due to this condition, then either the process computer refueling interlock computer point or the refueling platform's Rod Block Interlock #1 light may be used for verification of the Rod Block. **CM-15**

7.3.3 During core alterations, shall verify that the white rod withdraw permissive light on Panel 20(30)C05A extinguished (or by alternate method per note above) whenever the refueling bridge is over the reactor with either its main hoist loaded to greater than 485 lbs., OR any of its auxiliary hoists loaded to greater than 400 lbs. Failure of this light to extinguish indicates inoperative refueling interlocks and requires termination of core alterations. **CM-15**

7.3.4 Shall verify that neither recirculation pump is operating AND RHR Shutdown Cooling Flow Rate does NOT exceed 6500 gpm when In-Core Instrumentation is NOT protected on all sides by either fuel bundles or blade guides, in order to prevent flow vibration of the instruments. **CM-10, CM-11**

7.3.5 Shall maintain the applicable paper copy CCTAS by:

1. Observing WRNM count rates prior to performing each CCTAS step.

2. Monitoring WRNM count rates during the step.

3. Taking appropriate actions per Step 10.2.9 should any single count rate double during performance of the step.

> NOTE
>
> IF deemed necessary by the operator, THEN the initial WRNM count rates prior to performance of any step may be recorded in the blank spaces above the step to be performed.

4. Recording at the appropriate step in the paper copy CCTAS the final WRNM count rates, date and time at the completion of that step.

7.4 Reactor Engineer

7.4.1 Shall be responsible for maintaining the Special Nuclear Material (SNM) accountability files and ensure that the SNM accounting records necessary to properly document SNM movements are complete and accurate.

7.4.2 Shall provide the approved RE-C-40 CCTAS to the Fuel Handling Director, Refueling Platform Operator, Reactor Operator and Fuel Floor Office.

7.4.3 Shall collect, distribute, and file SNM documentation associated with this activity.

7.5 NMD Reactor Services Section Fuel Floor Supervisor

7.5.1 Shall make frequent inspections of the area during any Fuel Floor operation. **CM-7**

7.5.2 Shall report to the FHD on matters concerning the implementation of this procedure.

7.6 Health Physics Qualified Personnel

7.6.1 Shall monitor activities in the designated controlled access areas.

7.6.2 Shall provide RWPs for various tasks being performed on the refueling floor.

7.6.3 Shall post, survey, and maintain radiologically controlled areas.

8.0 CORE COMPONENT ACCOUNTABILITY

8.1 The RE-C-40 Core Component Transfer Authorization Sheet.

These sheets, and electronic disk copy if used, are both a schedule and an authorization for the relocation of fuel assemblies and the performance of other core component transfers. The applicable sheets will provide direction to the Fuel Handling Crew in performing core component handling operations. The paper copy in the Control Room will be used to ensure that the fuel movement and core alteration schedules are being followed. This sheet shall be used to record the official time and date when each fuel movement or other core alteration is performed. CCTAS is required for all core alterations, except normal control rod stroking in accordance with ST-O-003-465-2(3).

8.2 Revisions to the approved Core Component Transfer Authorization Sheets shall be made in accordance with RE-C-40.

8.3 The Reactor Engineer shall maintain the SNM accountability files in accordance with RE-C-044 and ensure that all SNM accountability records are accurate and current.

9.0 PRECAUTIONS

9.1 Core Alterations affect reactivity of core as monitored on the WRNMs. A sustained increase in count rate is indicative of an inadvertent criticality requiring immediate actions as directed by ON-124.

9.2 Observe all instructions and precautions specified in the various station procedures governing core component movements performed from the refueling bridge.

9.3 All control rods must be fully inserted when loading fuel in the core (except as permitted in Tech Spec 3.10.6).

9.4 All tools and personal items must be secured as required in A-C-130. **CM-7**

9.5 The refuel platform shall be inspected in accordance with SO 18.1.C-2(3) Attachment 1, Refueling Platform Preoperational Checkoff List, prior to the initial fuel handling shift, daily AND prior to resumption of bridge operation if interruption of bridge operation is greater than a shift. **CM-7**

9.6 If a full core off-load has occurred, a list of projected WRNM readings for the first 32 fuel moves will be provided to the Reactor Operator from Reactor Engineering.

9.7 During a core off-load or shuffle Part 1, no more than the maximum number of bundles specified in step 5.21 may be moved from the reactor to the fuel pool in any 24 hour period. **CM-13**

9.8 IF a fuel floor ARM alarms during movement of fuel into the fuel racks, THEN perform the applicable steps in accordance with ON-124, "Fuel Floor and Fuel Handling Problems".

9.9 When moving an irradiated fuel bundle, maintain as much distance as possible between the fuel bundle and reactor vessel wall.

9.10 Any time a fuel bundle must remain in the fuel preparation machine unattended, the fuel prep machine shall be lowered to the full down limit and the air supply disconnected.

9.11 Fuel Preparation Machines are NOT for storage of irradiated fuel assemblies. Therefore, prior to completing work activities for the day, OR whenever an extended delay in work is anticipated, fuel bundle(s) containing irradiated fuel rods shall be placed back into the fuel storage racks (ref. 3.49).

9.12 IF In-Core Instruments are not continuously supported throughout the entire fuel handling evolution by fuel bundles or blade guides on all sides, THEN neither recirculation pump shall be operated AND RHR Shutdown Cooling Flow should NOT exceed 6500 gpm (see Steps 5.32 and 5.34). **CM-10, CM-11**

9.13 Any item that is being removed from the fuel pool, reactor cavity, or equipment pool must be surveyed by a HP qualified person as it is raised to the surface of the water. **CM-8**

9.14 Shift Management and HP should be notified prior to moving any known leaking fuel bundles.

9.15 Swivel adapters shall be used singly to attach GE supplied and other approved servicing grapples to the refuel platform aux. hoists and auxiliary platform hoist. Do NOT use them to attach servicing grapples to any other crane or hoist without prior approval by Reactor Services Tech Staff. **CM-16**

9.16 Loads greater than 1,000 lbs. (excluding the rigging AND transport vehicle) shall NOT be moved over fuel assemblies in the spent fuel pool OR the fuel cask unless a PORC approved safety evaluation exists for the evolution. **CM-18**

10.0 LIMITATIONS AND ACTIONS

10.1 Difficulties in handling core components shall be treated as described in the appropriate station procedures.

10.2 Limitation to Continued Core Alterations and Load Handling:

10.2.1 IF failure of a DOUBLE VERIFICATION (DV) is discovered, THEN Core Alterations shall be terminated AND Shift Management, NMD Management and Reactor Engineering shall be notified. A PEP shall be initiated per LR-C-10 for failure of a DV. Challenges to the DV (e.g. one verifier accepts a discrepant condition which is caught by the other verifier) should be monitored. PEP initiation should be considered for cases of multiple DV challenges. **CM-3**

10.2.2 IF difficulty is encountered during insertion OR removal of a component, THEN inspect location using camera.

10.2.3 The loss of communications between the control room and the refueling floor shall be reason to terminate core alterations until communication is restored. **CM-3**

NOTE

The paper copy CCTAS will provide information identifying which WRNM detector(s) is connected for each step in the core shuffle. A minus sign (-) and/or a plus sign (+) will appear on the "step no." line below the connected WRNM detector designation. The minus sign indicates a bundle being removed from the core. A plus sign indicates a bundle being inserted into the core. It is possible, but not required to be connected to both WRNM detectors in the same quadrant.

10.2.4 Core Alterations shall NOT continue if the WRNM operability requirements of Tech Spec 3.3.1.2 are NOT met.

1. IF any WRNM becomes inoperable, THEN notify Reactor Engineering. Core shuffle may be designed such that only 1 of 2 WRNM's in their associated quadrant remains connected. The FHD shall evaluate acceptability of continuing core alterations based on connectivity to the remaining WRNM in the quadrant where core alterations are being performed. Reactor Engineering will evaluate if a revision to the CCTAS is required.

10.2.5 Terminate fuel handling operations if a fuel assembly or single fuel rod is dropped or damaged. IF this occurs, THEN perform the applicable steps in accordance with ON-124.

10.2.6 If any system OR equipment prescribed as a prerequisite to this procedure becomes inoperable, discontinue the core component transfer operations OR load handling over fuel until the required system or equipment is returned to operation. This includes controls, indications, interlock circuitry and mechanical and electrical equipment. Failures which are found and corrected in refueling interlock circuitry shall be tested by performing the applicable section(s) of refueling interlock test ST-O-018-120-2(3) or ST-O-018-125-2(3) before performance of in-vessel fuel movement with equipment associated with interlocks may resume.

NOTE

If a Rod Block signal is initiated by a planned activity and the rod withdraw permissive light is continuously de-energized on Panel 20(30)C05A due to this condition, then either the process computer refueling interlock computer point or the refueling platform's Rod Block interlock #1 light may be used for verification of the Rod Block. **CM-15**

10.2.7 During core alterations, if the white rod withdrawal permissive light on Panel 20(30)C05A does NOT extinguish (or alternate method per note above is used) when the refueling platform is over the reactor with its main hoist loaded to greater than 485 lbs, OR any of its aux. hoists loaded to greater than 400 lbs, core alterations shall be terminated.

10.2.8 During core alterations, if the "Rod Block Interlock #1" light does NOT light when the refueling platform is over the core with its main hoist loaded to greater than 485 lbs, OR any aux hoist loaded to greater than 400 lbs, core alterations shall be terminated.

NOTE

Reference Figure 1 at end of procedure for summary of step 10.2.9 and applicable ON-124 steps.

10.2.9 Continuously observe the WRNMs as applicable, during core alterations and immediately notify the Fuel Handling Director AND Shift Supervision to suspend component movement IF any WRNM count rate has doubled between CCTAS steps. **CM-6**

1. IF WRNM count rate doubles two times, THEN enter ON-124 immediately.

2. IF WRNM count rate stabilizes at a value of less than 2 doublings AND no WRNM spiking OR indication of WRNM inoperability exists, THEN component movement may resume.

This does NOT apply to the first, second, third or fourth fuel bundles placed adjacent to a WRNM at the beginning of a core reload.

10.2.10 If the WRNM count rate significantly exceeds the values predicted by the Reactor Engineer when the first, second, third, or fourth fuel bundles are placed adjacent to an WRNM at the start of core reload, terminate core alterations and notify the Reactor Engineer. **CM-3**

10.2.11 Table 2 provides requirements and limitations for handling light loads over irradiated fuel without secondary containment or other systems/equipment required to mitigate the fuel handling design basis accident (i.e., prerequisites 5.8 thru 5.13). These requirements and limitations are based on an engineering analysis documented in Reference 3.54.

10.2.12 If one or both Control Room Emergency Ventilation subsystems are inoperable, then take the required action(s) in accordance with Tech Spec 3.7.4. If the required action(s) being implemented include suspending handling of irradiated fuel in the secondary containment, then handling of other loads over irradiated fuel shall also be suspended, unless an analysis has been performed justifying otherwise.

10.2.13 If secondary containment, the SCIVs, OR one or both SBGT subsystems are inoperable, then take the required action(s) in accordance with Tech Spec 3.6.4.1, 3.6.4.2, OR 3.6.4.3. If the required action(s) being implemented include suspending handling of irradiated fuel in secondary containment, then handling of other loads over irradiated fuel shall also be suspended, unless an analysis has been performed justifying otherwise.

10.2.14 IF the electrical power requirements of Tech Spec 3.3.8.1, 3.8.2, 3.8.3, 3.8.5, 3.8.6 OR 3.8.8 are NOT met, THEN take action(s) in accordance with the appropriate Tech Spec. If the required action(s) being implemented include suspending handling of irradiated fuel in secondary containment, then handling of other loads over irradiated fuel shall also be suspended, unless an analysis has been performed justifying otherwise.

10.2.15 Suspend core alterations if any deviation from the CCTAS exists (such as to and from location, orientation, etc.) unless provisions are made which allow for an alternate course of action to be taken. If these provisions are NOT specified, contact Shift Management and the Reactor Engineering Manager (or designate) and request that a CCTAS revision be made in accordance with RE-C-40. **CM-3**

11.0 PROCEDURE

NOTE

Changes to the CCTAS must be made in accordance with RE-C-40.

11.1 Contact Shift Management and verify that the applicable prerequisites to this procedure are satisfied.

11.2 Obtain Shift Management permission to begin fuel movement or other core component transfers.

11.3 Contact Health Physics drywell control point and verify access control to upper elevations is in place.

11.4 Perform SO 18.1.C-2(3) Attachment 1, Refueling Platform Preoperational Checkoff List. After the checkoff list is initially performed, it shall be performed daily AND prior to resumption of bridge operation if interruption of bridge operation is greater than a shift.

11.5 IF a core off-load OR shuffle Part 1 is being performed, THEN use Table 1 to ensure that no more than the maximum number of bundles specified in step 5.21 are moved into the fuel pool in any 24 hour period. **CM-13**

11.6 Utilizing the appropriate RE-C-40 CCTAS, perform the following steps: **CM-3**

11.6.1 For CCTAS moves involving core alterations the FHD shall double verify with the appropriate RO the correct CCTAS step. This shall be done by direct repeat back between the FHD and RO of pertinent CCTAS information (i.e. step number).

11.6.2 The FHD and the RPO or Spotter shall verify the correct mast location AND orientation prior to grappling and prior to inserting a bundle into a core or fuel pool location. **CM-14**

11.6.3 Move the component specified on the CCTAS per the appropriate station procedures.

11.6.4 The RO,FHD, and RPO or Spotter (as applicable) shall document the move on the paper copy CCTAS.

11.6.5 Some peripheral fuel bundle locations may present a mast camera-to-core shroud interference. The paper copy CCTAS will provide notice when a step involves one of these locations.

11.7 Prior to withdrawing any control blades or beginning in-vessel maintenance, visually double verify that the correct maintenance location control cells were off-loaded in accordance with ST-O-003-950-2(3). **CM-3**

11.8 Once core off-load or shuffle Part 1 is complete, in-vessel maintenance can be performed in accordance with the appropriate station procedures.

11.9 Prior to core reload or Core Shuffle Part 2, perform the following. N/A this step if this FH-6C is NOT being used for core reload or Core Shuffle Part 2.

11.9.1 Visually verify by camera scan conducted from the refuel floor that all rods withdrawn for maintenance in accordance with GP-26 are fully inserted.

11.9.2 Verify PIPS are reconnected for GP-26 Maintenance Cells.

11.9.3 Double verify all control rods are fully inserted using control room indication. **CM-3**

11.10 Perform Core Reload or Shuffle Part 2 moves in accordance with the guidance given in Step 11.6.

11.11 WHEN temporarily suspending irradiated core component transfers with the intent to unrestrict access to the drywell upper elevations, THEN perform the following:

11.11.1 Post a sign in front of the Fuel grapple controls to remind personnel to verify access control to the drywell upper elevations is in place prior to resuming irradiated core component handling.

11.11.2 Contact the Health Physics drywell control point leader and inform the leader that irradiated core component transfers have been halted and that access to the drywell upper elevations may be unrestricted and that the Fuel grapple controls have been posted to re-verify access control prior to resuming component handling.

11.12 Procedure Close-out

> NOTE
>
> This procedure close-out is NOT required to be complete in its entirety prior to the issuing of a new FH-6C due to the updating of records in accordance with RE-C-044.

11.12.1	Upon completion of activities governed by this procedure, the Reactor Engineer shall assemble all SNM movement documentation.	_____ RE
11.12.2	Upon completion of core reload or shuffle, perform M-C-797-020, "Core Verification". Mark this step N/A if core reload or shuffle was NOT performed by this procedure.	_____ RE
11.12.3	The Reactor Engineer shall initiate the update of all SNM accounting documents affected by completion of this procedure.	_____ RE

TABLE 1
FUEL MOVEMENT RESTRICTION ACCOUNTABILITY
MAXIMUM # OF BUNDLES ALLOWED TO BE MOVED INTO FUEL POOL PER 24 HOUR PERIOD
(Required for Core Off Load or Fuel Shuffle "PART 1" Only - Fill Out Every 8 Hours)
Start Date: _____ Limit = _____ (from Step 5.21)

Shift / Day	CCTAS Step No. Start	CCTAS Step No. Finish	Total # Bundles moved to pool in last 8 hours (Do not count B/G's)	Total # Bundles moved to pool in 24 hours (This shift plus last 16 hrs)	# Bundles allowed to be move to pool in next 8 hours =Limit-(# moved in previous 16 hrs)	Initials (FHD)
/						
/						
/						
/						
/						
/						
/						
/						
/						
/						
/						
/						
/						
/						
/						
/						

TABLE 2

ALLOWABLE LIGHT LOADS OVER IRRADIATED FUEL WITHOUT SECONDARY CONTAINMENT

This table provides a listing of light loads allowed to be handled over irradiated fuel without secondary containment or other systems/equipment required to mitigate the fuel handling design basis accident. These requirements and limitations are based on an engineering analysis documented in Reference 3.54

Object	Limitations*
Any object 5 lbs. or less	None
Any object 10 lbs. or less	Object has drag and buoyancy properties less severe than either a 10 lb 1 inch dia. steel rod OR a 10 lb solid steel cube
TriNuc cartridge filter	10 lbs. or less (approx. 6" O.D. x 30" long)
Teletector survey instrument	10 lbs. or less
Black & White Camera/Light Assembly	10 lbs. or less (approx. 1.25" dia. with 3" x 4.5" light assembly)
Color Camera/Light Assembly	15 lbs. or less (approx. 5" x 5" x 10")
Guide Tube Vacuum Head	15 lbs. or less (approx. 10" dia.)
Color Camera/Light Assembly attached to lightweight handling poles (LWHP)	15 lbs. or less (approx. 5" x 5" x 10") LWHPs - any length, but no more than 10' above pole handler
Guide Tube Vacuum Head attached to LWHP	15 lbs. or less (approx. 10" dia.) LWHPs - any length, but no more than 10' above pole handler
LWHPs w/ no attachments	Maximum length = 20' OR Maximum length = 70' if bottom of assembly is within 4' of fuel #

* For all objects, reactor cavity/spent fuel pool water level must be at least 231' 3"
\# Poles must be assembled in an area clear of fuel (e.g., over annulus or cask pit)

Neutron Monitoring and Response to Abnormal WRNM Response During Fuel Handling
Figure 1

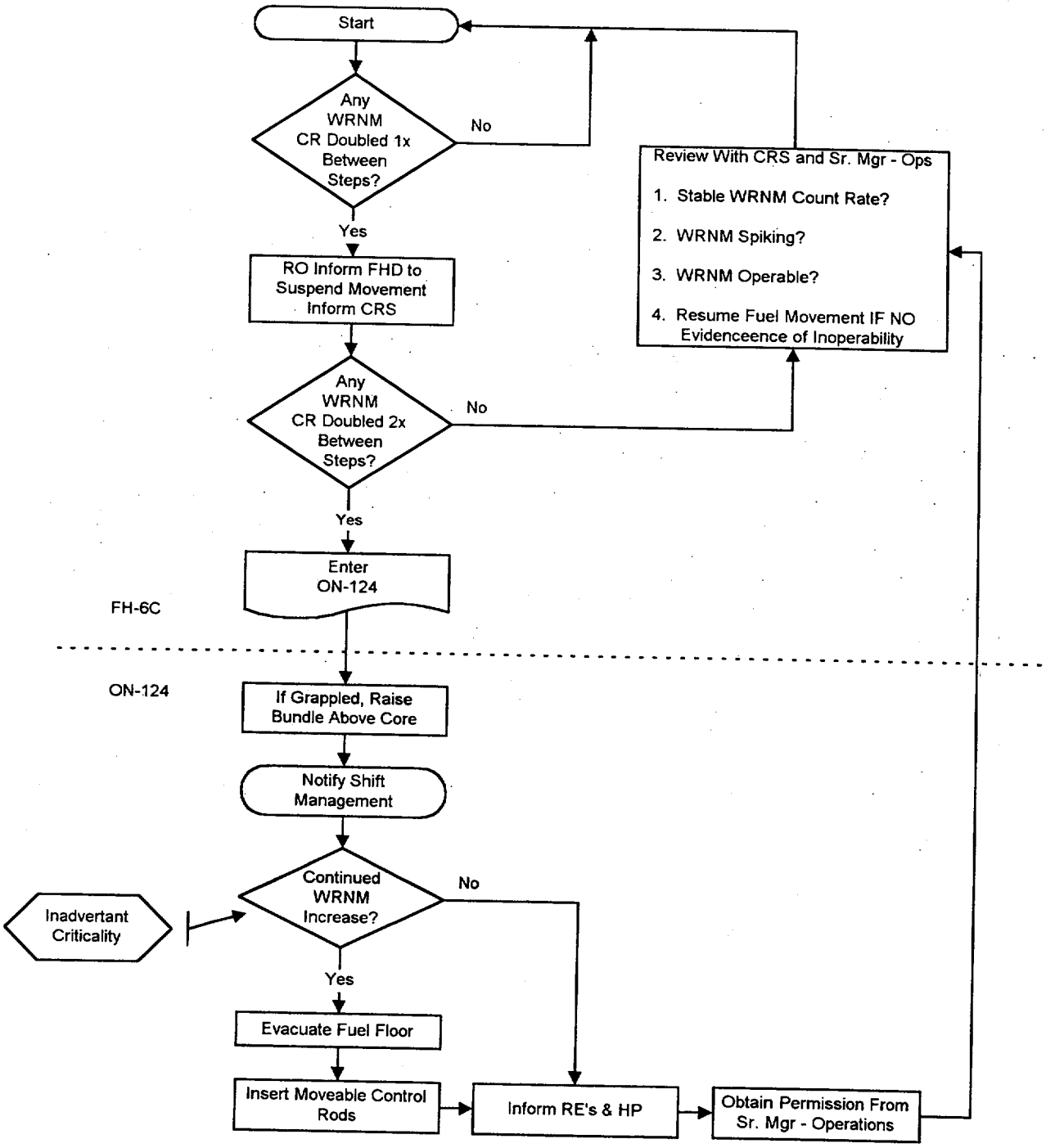

*** NOTE**
Does NOT apply during loading of 1st, 2nd, 3rd, or 4th bundle adjacent to a WRNM Detector at the beginning of a core reload. Reactor Engineering will provide expected WRNM count rates during initial steps of a core reload.

PECO ENERGY COMPANY
PEACH BOTTOM UNITS 2 & 3

ON-124 FUEL FLOOR AND FUEL HANDLING PROBLEMS - PROCEDURE

1.0 SYMPTOMS

> NOTE
>
> Step 1.1 is not applicable when loading the 1st, 2nd, 3rd, or 4th fuel assembly directly adjacent to WRNMs at the beginning of a core reload.

1.1 WRNM count rate doubles two times between CCTAS steps during fuel handling.

OR

1.2 Unanticipated "FUEL STORAGE POOL HI RADIATION" alarm on Panel 2(3)0C075 C-1 during fuel handling in the Spent Fuel Pool.

OR

1.3 Unanticipated Fuel Floor Area Radiation Monitor alarms while handling any object in the Spent Fuel Pool, Reactor Cavity, OR Equipment Storage Pit.

OR

1.4 Fuel assembly dropped OR damaged.

OR

1.5 Single fuel rod dropped OR damaged.

OR

1.6 Unanticipated loss of water inventory in the Spent Fuel Pool, Reactor Cavity, OR Equipment Storage Pit.

2.0 OPERATOR ACTIONS

2.1 IF WRNM count rate doubles two times between CCTAS steps, THEN:

2.1.1 IF grappled, THEN raise fuel assembly from core so that it clears upper grid (approximately 360 inches hoist position).

2.1.2 Notify Shift Management.

2.1.3 Determine WRNM count rate.

2.1.4 IF count rate continues to raise (criticality), THEN evacuate the Fuel Floor to Turbine Building elevation 165' OR area designated by Shift Management as per GP-15, "Local Evacuation".

2.1.5 Ensure all insertable control rods are fully inserted.

2.1.6 Notify Health Physics AND Reactor Engineering.

2.1.7 Obtain permission from the Senior Manager, Operations before resuming fuel handling operations.

2.2 IF the "FUEL STORAGE POOL HI RADIATION" alarm on Panel 2(3)0C075 C-1 alarms AND the alarm IS NOT due to a fuel assembly positioned near the Fuel Pool Radiation Monitor, THEN:

2.2.1 IF moving fuel into the Spent Fuel Pool storage racks OR Independent Spent Fuel Storage Installation (ISFSI) Cask Basket Assembly (CBA), THEN IMMEDIATELY raise the fuel assembly from EITHER the storage racks so the fuel assembly clears the top of the rack OR the ISFSI CBA so the fuel assembly clears the top of the ISFSI CBA.

2.2.2 Notify Health Physics to perform appropriate surveys on the Fuel Floor AND 195' AND 165' elevations.

2.2.3 Notify Shift Management.

2.2.4 IF directed by Health Physics OR ANY Fuel Floor Area Radiation Monitor alarms, THEN evacuate the Fuel Floor to Turbine Building elevation 165' or area designated by Shift Management as per GP-15, "Local Evacuation".

2.2.5 Shift Management shall determine the disposition of the fuel assembly (if required).

2.2.6 Obtain Shift Manager authorization to resume Fuel Floor operations.

2.3 IF a Fuel Floor Area Radiation Monitor alarms, unplanned, while handling any object in the Spent Fuel Pool, Reactor Cavity, OR Equipment Storage Pit, THEN:

2.3.1 IF a Fuel Floor Area Radiation Monitor alarm is unexplained, THEN enter T-103, "Secondary Containment Control".

2.3.2 Immediately re-submerge AND/OR lower the object being handled OR grapple being operated.

2.3.3 Evacuate the Fuel Floor to Turbine Building elevation 165' OR area designated by Shift Management as per GP-15, "Local Evacuation".

2.3.4 Notify Shift Management.

2.3.5 Notify Health Physics to perform appropriate surveys.

2.3.6 Obtain Shift Manager authorization to resume Fuel Floor operations.

2.4 IF a fuel assembly is dropped OR damaged, THEN:

2.4.1 Terminate Fuel Floor operations.

2.4.2 Evacuate the Fuel Floor to Turbine Building elevation 165' OR area designated by Shift Management as per GP-15, "Local Evacuation".

2.4.3 IF the fuel assembly is located in the Reactor Cavity, THEN evacuate the drywell.

2.4.4 Notify Shift Management.

2.4.5 Isolate Reactor Building Ventilation AND Refuel Floor Ventilation AND initiate Standby Gas Treatment system.

2.4.6 IF fuel damage results in a "2(3) UNIT REFUELING FLOOR AREA HI RADIATION" alarm on Panel 003 B-4(F-4) OR "REFUELING FLOOR VENT EXHAUST HI RADIATION" alarm on Panel 218(318) A-1, THEN enter ERP-101, "Classification of Emergencies".

2.4.7 IF major fuel damage is observed, THEN enter ERP-101, "Classification of Emergencies".

2.4.8 Notify Health Physics to perform the appropriate surveys and entrance to the Fuel Floor area shall be restricted until appropriate radiological studies have been performed and entrance requirements established.

2.4.9 Notify Reactor Engineers.

2.4.10 Shift Management shall determine the exact nature of the damage to the subject fuel assembly AND to the surrounding fuel assemblies and core components.

2.4.11 Obtain Shift Manager authorization to resume Fuel Floor operations.

2.5 IF a single fuel rod is dropped OR damaged, THEN:

2.5.1 Terminate Fuel Floor operations.

2.5.2 Notify Shift Management.

2.5.3 Notify Health Physics to monitor radiological conditions to aid Shift Management in determining the following:

- o IF a Fuel Floor evacuation is required.

  AND

- o IF Refuel Floor Ventilation needs to be isolated.

  AND

- o IF Standby Gas Treatment system should be initiated.

2.5.4 IF the Fuel Floor is evacuated, THEN entrance to the Fuel Floor area shall be restricted until appropriate radiological studies have been performed and entrance requirements established as per GP-15, "Local Evacuation".

2.5.5 IF fuel damage results in a "2(3) UNIT REFUELING FLOOR AREA HI RADIATION" alarm on Panel 003 B-4(F-4) OR "REFUELING FLOOR VENT EXHAUST HI RADIATION" alarm on Panel 218(318) A-1, THEN enter ERP-101, "Classification of Emergencies".

2.5.6 IF major fuel damage is observed, THEN enter ERP-101, "Classification of Emergencies".

2.5.7 Shift Management shall determine the exact nature of the damage to the dropped or damaged single fuel rod AND to the surrounding fuel assemblies and core components.

2.5.8 Notify the Reactor Engineers.

2.5.9 Obtain Shift Manager authorization to resume Fuel Floor operations.

2.6 IF the Spent Fuel Pool, Reactor Cavity, OR Equipment Storage Pit water level unexpectedly lowers, THEN:

2.6.1 Notify Shift Management.

2.6.2 Immediately lower all irradiated components hanging from the main hoist, mono hoist, aux hoist, overhead crane, or otherwise being handled, in the Spent Fuel Pool, ISFSI CBA, Reactor Cavity, OR Equipment Storage Pit to a safe condition:

- o Finish transporting material to its designation, OR return the material to its original storage space.

- o IF time is vital, THEN lower the material to the nearest underwater storage location.

- o IF no storage location is available, THEN lower the material as low as possible in the water.

- o IF any fuel preparation machines are loaded, THEN lower the fuel prep machine to its full down position AND disconnect its air supply.

2.6.3 Notify Health Physics to continuously evaluate radiological conditions on the Fuel Floor AND recommend evacuation OR allowance to continue with the following steps.

2.6.4 IF water level is lost to below fuel level in the Spent Fuel Pool, THEN enter ERP-101, "Classification of Emergencies".

2.6.5 Evacuate all personnel nonessential for placing the Fuel Floor in a radiologically safe condition to the Turbine Building elevation 165' OR area designated by Shift Management as per GP-15, "Local Evacuation".

2.6.6 IF radiological conditions permit, THEN perform the following:

- o As directed by Shift Management, add water inventory to the affected area.

- o Perform FH-74, "Actions in Response to an Unexpected Loss of Fuel Pool, Reactor Cavity, or Equipment Storage Pool Water Inventory", for placing Fuel Floor in a safe condition.

2.6.7 IF level can NOT be recovered by any other means, THEN inject HPSW in accordance with AO 32.2-2(3), "High Pressure Service Water Injection Into The Reactor Vessel".

2.6.8 Evacuate the Fuel Floor to the Turbine Building elevation 165' OR as designated by Shift Management.

2.6.9 Notify Shift Management once all personnel have evacuated the Fuel Floor.

2.6.10 Obtain Shift Manager authorization to resume Fuel Floor operations.