Strategic Teaming and Resource Sharing

D. R. Woodlan, Chairman
Integrated Regulatory Affairs Group
P.O. Box 1002, Glen Rose, Texas 76043

Ref: DG-1115

STARS-02008

June 7, 2002

U. S. Nuclear Regulatory Commission
ATTN: Document Control Desk
Washington, DC 20555-0001

STRATEGIC TEAMING AND RESOURCE SHARING (STARS)
"DEMONSTRATION OF THE COMPONENT TEST METHOD
FOR DETERMINING CONTROL ROOM IN-LEAKAGE"

References:

1. Letter from Alan C. Passwater to the NRC Document Control Desk, "Submittal of the Strategic Teaming and Resource Sharing (STARS) Engineering Report on Control Room In-leakage," AmerenUE letter to the NRC Document Control Desk, dated March 5, 2001 (ULNRC-04402)

2. Letter from D. R. Woodlan to the NRC Document Control Desk, "Submittal of Strategic Teaming and Resource Sharing (STARS) Additional Information on Control Room Habitability," dated August 31, 2001 (STARS-01002)

Gentlemen:

The purpose of this letter is to update the plans of the STARS [1] plants regarding control room habitability. Included in this letter is the basis for using the Component Test Method as a baseline test for determining control room in-leakage. STARS plants plan to use this integrated test method for any future baseline testing of their control rooms. This test method has generic applicability for positive-pressure control room plants throughout the industry.

Background

STARS formed a project team in late 1999 to address industry concerns regarding control room habitability. The team's charter was to determine the best method for assuring that the control rooms at the STARS plants meet their design basis in a logical, cost effective manner. The

[1] STARS consists of six plants operated by TXU Generation Company LP, AmerenUE, Wolf Creek Nuclear Operating Corporation, Pacific Gas and Electric Company, STP Nuclear Operating Company and Arizona Public Service Company.

A003
A017

team's project manager became a member of the Nuclear Energy Institute (NEI) task force that was formed to address this issue.

A self-assessment was performed at each STARS facility to ensure that the licensing and design bases were met and that industry issues were addressed. The self-assessment team consisted of peer reviewers among the STARS plants. The self-assessment was consistent with the method discussed in NEI 99-03, "Control Room Habitability Assessment Guidance," June 2001, for assessing plant control rooms. The results of the self-assessments were reported to the NRC in Reference 1. [2] (See STARS engineering report, "Component Test Method for Determining Control Room In-Leakage" which was enclosed in Reference 1).

Following the self-assessments, corrective actions are being taken to address any deficiencies. The team agreed that each control room should be baseline tested for in-leakage. The team was concerned with the relatively large uncertainties that were being reported by other facilities throughout the industry that had tested their control rooms using a method described in ASTM E741, "Standard Test Method for Determining Air Change in a Single Zone by Means of a Tracer Gas Dilution." This test method is described as the Integrated Tracer Gas Test method in Section 5.3.1 of Appendix I of NEI 99-03. The team commissioned a study to understand the reasons for these large uncertainties and developed an alternative test method more suitable to the STARS control room designs. Reference 2 was submitted to the NRC staff to present the results of this uncertainty study. Reference 2 also submitted the overall results of integrated tracer gas and component testing conducted at the Palo Verde Nuclear Generating Station (PVNGS). These results demonstrated that the in-leakage results determined by the Component Test method compared favorably to the results from the Integrated Tracer Gas Test method with less uncertainty. In Reference 2, it was stated that STARS planned to conduct similar comparison testing at the Comanche Peak facility since this plant had a larger number of diverse components that were vulnerable to in-leakage.

Reference 2 also provided the general plan for addressing control room habitability for the STARS plants. It was expected that the Palo Verde and Comanche Peak test results would demonstrate that the Component Test Method is a valid method for performing control room in-leakage baseline testing. The remaining STARS plants planned to perform control room in-leakage measurements using the Component Test Method to provide the basis for the unfiltered in-leakage assumptions of the control room habitability calculations. The STARS plants also planned to establish a long-term control room habitability maintenance program based on the guidelines of NEI 99-03. These actions should provide an acceptable approach for maintaining control room integrity.

Control Room In-leakage Testing

Testing for determining control room in-leakage was performed at the Comanche Peak plant from December 3 to 13, 2001. Comparison of in-leakage results was made by using both the Integrated Tracer Gas Test method and the Component Test method described in Appendix I of

[2] Although a self-assessment was performed at the Palo Verde plant, the results were not reported in Reference 2 because Palo Verde was not a member of STARS at the time the report was submitted.

NEI 99-03. The results of both methods compared favorably with the other. Unfiltered in-leakage was determined to be 0 scfm. Filtered in-leakage (not including the filtered make-up air used to pressurize the control room) was determined to range from 232 to 245 scfm depending on which train of control room ventilation was in operation. The requirements of General Design Criterion 19 of Appendix A of 10CFR50 were met. The results of these tests are included in Attachment 1.

As discussed above, comparison testing for determining control room in-leakage had been performed earlier at PVNGS from April 24 to 27, 2001. The unfiltered in-leakage was determined to be 0 scfm. The results were within the requirements of the plant's licensing basis criteria for control room unfiltered in-leakage. The overall results of this test were reported in Reference 2. The detailed results of this test are included in Attachment 2.

STARS/ NRC Interactions

In addition to the two referenced letters, STARS personnel have made numerous presentations regarding the Component Test method to the NRC staff through the NEI Control Room Habitability Task Force. NRC Staff members observed the testing at Comanche Peak.

Present STARS actions consist of reviewing the four related draft regulatory guides and draft generic communications to address management of control room habitability. STARS has submitted comments on DG-1111, "Atmospheric Relative Concentrations for Control Room Habitability Assessments at Nuclear Power Plants" and DG-1113, "Methods and Assumptions for Evaluating Radiological Consequences of Design Basis Accidents at Light-Water Nuclear Power Reactors." STARS personnel are presently reviewing and will be presenting comments on DG-1114, "Control Room Habitability at Nuclear Power Reactors," DG-1115, "Demonstrating Control Room Envelope Integrity at Nuclear Power Reactors," and the draft generic communications appearing in the Federal Register on May 9, 2002. The comments will challenge the preliminary NRC position on baseline testing and component testing issues found in Sections 1.1 and 1.2 of DG-1115. Attachment 3 provides a synopsis contrasting the NRC and STARS positions on these testing issues.

Conclusion

The results from the in-leakage testing conducted at Comanche Peak and PVNGS are, respectively, reported in this letter's Attachments 1 and 2. The results from the Component Test method were validated by the results from the Integrated Tracer Gas Test method at both of these facilities. In general, there was less uncertainty associated with the results from component testing than from integrated tracer gas testing. The two control rooms tested bound the range of control room configurations among the STARS plants. At both plants, the Component Test method reliably established the total unfiltered in-leakage.

The program used by STARS to address control room habitability with the described testing clearly demonstrates the validity of the Component Test method for the STARS plants. Future baseline testing for determining control room in-leakage by STARS plants will be based on the

Component Test method. This test method will properly demonstrate that each plant's control room habitability systems are designed, constructed, configured, operated and maintained in accordance with the facility's design and licensing bases.

As a result, the STARS plants intend to continue with the plan presented in Reference 2. The remaining STARS plants are using their planning and budgeting processes to determine the earliest time that they can perform baseline control room in-leakage measurements using the Component Test method. The STARS plants also plan to establish a long-term control room habitability maintenance program. This long-term program will be based on the guidelines of NEI 99-03 and lessons learned from the STARS baseline testing. This long-term program should be in place when baseline testing is completed at all the STARS plants. These actions will provide adequate assurance that control room habitability is adequately established and maintained.

In addition, the STARS plants are closely following the generic guidance being developed and issued by the NRC. Comments have already been provided on DG-1111 and DG-1113. Attachment 3 to this letter provides comments on the baseline and component testing sections of DG-1115. Additional comments are being prepared on DG-1114, DG-1115 and the draft generic communications. These comments will be submitted to the NRC by the requested dates.

The NRC may find it useful to review the attached material, as well as the material in References 1 and 2, to assist in the development of this series of regulatory guides. As such, the review fees should be waived. The STARS plants recommend that this review be performed.
If there are any questions regarding these comments, please contact me at 254-897-6887 or dwoodla1@txu.com.

Sincerely,

D. R. Woodlan, Chairman
Integrated Regulatory Affairs Group
STARS

Attachments:

1. Comanche Peak Control Room In-leakage Test Summary
2. Palo Verde Control Room In-leakage Test Summary
3. STARS Position on NRC Draft Regulatory Guide DG-1115, Sections 1.1 and 1.2

c- Samuel J. Collins, Director Office of Nuclear Reactor Regulation
John N. Hannon, NRR
Jack N. Donohew, NRR

Comanche Peak Control Room In-leakage Test Summary

1.0 INTRODUCTION

As part of a comprehensive control room habitability program, Comanche Peak contracted an independent contractor to perform component and integrated leak rate tests of their control room pressure boundary using tracer gas test methods. The components selected for testing were identified during a self-assessment performed at Comanche Peak in March 2000. More information regarding this assessment can be found in Reference 6.1. Preliminary work included a walk-down to select injection and sample points and scheduling of work. This was followed by site-specific procedure development for the work to be performed. Site-specific procedures were developed for the constant injection leak rate testing of the control room envelope, damper leak testing of suspected vulnerable leak paths and duct leak rate testing of non-Q ductwork within the control room pressure boundary.

The Comanche Peak control room design meets the characteristics described in Section 5.3.2 of Appendix I of NEI 99-03 (Reference 6.2). Comanche Peak shares a common control room between its two reactor units. Reference 6.1 provides a description of the control room envelope and ventilation system. Briefly, the Comanche Peak control room envelope consists of three interconnected levels, the control room proper at 830 foot referenced elevation level, the technical support center at the 840 foot elevation, and the control room heating, ventilation and air conditioning (HVAC) train-A and train-B equipment rooms at the 854 foot elevation. The two equipment rooms are adjacent to a room that houses the HVAC equipment for the office and service area (OSA) and uncontrolled access area. The supply and return ducts for these two systems pass through a corner of the train-A and train-B equipment rooms.

Each of the emergency train-A and train-B pressurization make-up fans provide a nominal 800 cfm of filtered outside air to the 8000 cfm emergency recirculation filter that is then mixed with air returned to the control room air-conditioning units (two operating at nominally 25,845 cfm each). The dampers used to isolate the emergency flow path from the normal flow path are opposing metal blades with metal-to-metal seals.

2.0 DESCRIPTION OF TESTS PERFORMED

2.1 Damper Leak Tests

The damper leak tests were based on ASTM E2029-1999, "Standard Test Method for Volumetric and Mass Flow Rate Measurement in a Duct Using Tracer Gas Dilution." A self-assessment of the control room identified four possible damper leak paths when either HVAC train was operating in the emergency mode. These paths are identified along with the tracer gas injection and sample points in Figure 1 to this attachment. Path 1 is the normal make-up flow path for train-A. Path 2 is the normal make-up flow path for train-B. Path 3 is the flow path through

train-B when train-A is operating. Path 4 is the flow path through train-A when train-B is operating. All of these leak paths were determined to be additional potential sources of filtered outside airflow to the system. To confirm this, an additional sample, S_x, was taken at traverse point 13 shown in Figure 1 to verify if any of the tracer gas leaking past the dampers could become unfiltered in-leakage. The tests were conducted with train-A and train-B in the emergency mode of operation required for response to a radiological event.

To obtain the leak rate flow through each damper, the tracer gas injection flow rate was multiplied by the ratio of the injected tracer gas concentration to the tracer gas concentration found downstream of the injection point. During the performance of the damper leak tests, the control room pressurization surveillance tests were performed by plant personnel. These tests were used to measure the emergency pressurization filter airflow of the operating train and the relative pressure of the control room to the outside and adjacent areas.

2.2 Duct Leak Tests

Tests were conducted on the portions of the duct from the Office and Service Area (OSA) and Uncontrolled Access Area (UCA) HVAC systems in mechanical equipment room 151 that pass through the control room pressure boundary equipment rooms 150 (North) and 150A (South) at elevation 854'. The test procedure was based on ASHRAE Transactions: Symposia BN-97-14-3, Part II, Step 1, "Determining the Actual Leakage Rate from the Specific Component in Question." The ducts passing through the equipment rooms were isolated using tents. The air inside the tents was mixed using fans while the tents were ventilated at a constant flow rate using nominal 50 cfm blowers. During the performance of the test, tracer gas was injected either in the return housing for the UCA or split between the two fan inlets for the OSA. Samples were taken in the area outside the tents, inside the tent and in the downstream duct portion located in equipment rooms 151A and B. The duct leak rate was calculated by multiplying the tent ventilation flow rate by the ratio of the tracer gas concentration in the tent sample to the tracer gas concentration in the duct. During these tests, the A-train emergency filtration system was in operation. The differential pressure between the OSA & UCA supply duct and rooms 150 & 150A were tested earlier during the damper leak tests. Since the differential pressure was greatest when train-A was operating, this was the basis for choosing this train for leak testing the ducts.

2.3 Other Component Testing

The relative pressures from areas inside the control room envelope to adjacent areas outside the envelope were measured with the control room HVAC system in the emergency mode. Sufficient measurements were taken to represent all areas of the test boundary. Measurements were taken using a calibrated Shortridge Airdata Multimeter with an accuracy of +/-2 %. Figure 2 of this attachment provides a summary of the test results.

The self-assessment of the control room boundary determined that the instrument air or service air systems were potential unfiltered in-leakage paths. These systems were walked down. Those leakage paths that could not be eliminated by repair or refurbishment were tested using a Film Flow Calibrator with an accuracy of +/- 2 % from 1200 to 6000 sccm.

2.4 Integrated Tracer Gas Test

The total in-leakage into the control room envelope was also determined by integrated tracer gas testing. The procedure for this test was based on the constant injection leak rate procedure of ASTM E741, " Standard Test Method for Determining Air Change in a Single Zone by Means of Tracer Gas Dilution." In order for this method to be valid, spatial uniformity in the different areas of the boundary envelope needed to be established. This spatial uniformity test was performed with the train-A emergency filtration system operating. Tracer gas was injected for a short duration ("puff") and samples were taken throughout the envelope. Sixteen samples were taken in the control room area, fourteen samples were taken in the technical support area, eight samples were taken in the train-A equipment room area and seven samples were taken in the train-B equipment room area. After the spatial uniformity results were found satisfactory, the constant injection test was then performed. Tracer gas was injected at a constant rate into the pressurization flow until tracer gas concentration equilibrium was obtained throughout the envelope. The time to equilibrium was shortened by using a "puff" of tracer gas to raise the concentration of tracer gas to the target concentration. The total control room envelope leak rate was then determined by multiplying the tracer gas injection flow rate by the ratio of the injected tracer gas concentration to the average tracer gas concentration in the envelope at equilibrium. Since the tracer gas was injected in the pressurization airflow, samples taken downstream of this injection point provided a measure of this flow for the duration of the constant injection test. The unknown in-leakage to the control room envelope was then calculated by subtracting the pressurization flow rate and the damper leak flow rate from the leak rate obtained from the constant injection test.

3.0 TEST RESULTS

3.1 Damper Leak Test Results

The results from the damper leak tests are shown in Table 1. The ± values after the flows were calculated at the 95% confidence level.

Table 1
Damper Leak Airflows

Leak Path	Train A Operating	Train B Operating
Path 1	40.8 ± 0.44 scfm	33.2 ± 1.9 scfm
Path 2	128 ± 6.5 scfm	151 ± 5.0 scfm
Path 3	76 ± 7.0 scfm	NA
Path 4	NA	47.3 ± 2.9 scfm
Total	**245 ± 9.6 scfm**	**232 ± 6.1 scfm**

Table 1 **Damper Leak Airflows**		
Pressurization Flow (from surveillance test)	698 scfm	679 scfm
Total Make-up Flow (used for target concentration)	943 scfm	911 scfm
Pressurization Flow (from constant injection test)	717 ± 19 scfm	715 ± 15 scfm

3.2 Duct Leak Rate Test Results

The results for the duct leak tests are presented in Table 2.

Table 2 **Duct Leak Test Results**		
	Office and Service Area	Uncontrolled Access Area
North Section Leak Rate	≤ 0.075 ± 0.003 scfm	≤ 0.062 ± 0.002 scfm
South Section Leak Rate	≤ 0.18 ± 0.007 scfm	≤ 0.14 ± 0.01 scfm
Total Leak Rate	**≤ 0.26 ± 0.008 scfm**	**≤ 0.20 ± 0.01 scfm**

3.3 Other Component Test Results

The results for the other component tests are presented in Table 3.

Table 3 **Other Component Test Results**		
	Train-A operating	Train-B operating
Minimum pressure to adjacent area (from surveillance test)	**0.43 inches W.G.** (see Figure 2)	**0.43 inches W.G.**
Instrument air and service air systems	Not detectable when measuring in the cubic centimeter per minute range (as a result, this test was performed only for one train)	
Total Leak Rate	**0 scfm**	**0 scfm**

3.4 Integrated Tracer Gas Test Results

Results using the constant injection test method are presented in Table 4.

Table 4 Constant Injection Leak Rate Test Results	
Train-A	**911 ± 27 scfm**
Train-B	**926 ± 21 scfm**

3.5 Unknown In-leakage Rate Results

The results of the calculation for the unknown in-leakage results are presented in Table 5.

Table 5 Unknown In-leakage Results		
	Train-A	Train-B
Unknown in-leakage calculated using pressurization flow measured during constant injection test	**-51 ± 34 scfm**	**-21 ± 27 scfm**
Unknown in-leakage calculated by correcting damper leak airflow for different conditions	**-44 ± 34 scfm**	**-18 ± 27 scfm**

3.5 Error Analysis

The errors shown in the tables above were random errors (precision) calculated at the 95% confidence level. As an example, consider the leak rate data for the train-B constant injection test:

$$C_{mean} = 43.30 \pm 0.98 \text{ ppb } (\pm 95\% \text{ confidence limits})$$

$$F_{average\ injection} = 4.01 \times 10^{-5} \pm 5.6 \times 10^{-9} \text{ scfm } (\pm 95\% \text{ confidence limits})$$

The 95% confidence limit is calculated from:

$$C_{mean} = C_{mean} \pm t(n-1, 1-\alpha)\, s/\sqrt{n}$$

$$F_{average\ injection} = F_{average\ injection} \pm t(n-1,1-\alpha)\, s/\sqrt{n}$$

where C_{mean} is the average concentration of the CR envelope samples taken after equilibrium was reached, $F_{average\ injection}$ is the average tracer gas flow rate during the time the samples were taken, S is the sample deviation, n is the number of samples (n=6 for C_{mean}, n=600 for $F_{average\ injection}$), and $t(n-1,1-\alpha)$ is the two-sided confidence limit of the student t distribution at n-1 degrees of freedom and $\alpha = 0.05$ for 95% probability.

The precision for the result of 926 scfm at the 95% confidence limit is then calculated from:

$$926\ scfm \bullet \sqrt{(0.98/43.30)^2 + (5.6 \times 10^{-9}/4.01 \times 10^{-5})^2} = \pm 21\ scfm$$

The error analysis demonstrates acceptable application of the test procedures and methodology and is not intended to be used for modifying the nominal measured values.

4.0 DISCUSSION OF THE TESTING ISSUES

4.1 Damper Leak Rate Tests

The initial injection point for Path 3 (leak through the idle train-B dampers while train-A was operating) allowed the activated carbon in the pressurization filter to attenuate the tracer gas concentration. As a result, no leak rate was measured during the first testing attempt. This condition was corrected by moving the injection point downstream of the activated carbon and repeating the test. The injection point corresponding to Path 4 for the idle train-A damper test when train-B was operating was adjusted accordingly.

The leak rates were higher than expected. The accident analysis assumed a total "filtered" air in-leakage of 30 cfm. Although the test results were higher than the assumed leakage, the leakage was filtered with a greater than 99 percent efficiency. Calculations were performed to demonstrate that regulatory limits of General Design Criterion 19 of Appendix A of 10CFR50 were met. An evaluation is being conducted to determine the long-term action to ensure that the licensing basis reflects the plant.

4.2 Duct Leak Rate Tests

No significant problems were encountered while performing these tests. It was noticed that the airflow split between the North and South ducts was unequal for both the systems tested (OSA and UCA). This led to different concentrations in the ducts and thus different minimum detectable leaks as shown in Table 2. The concentration of tracer gas that was maintained in the South duct was always less than the corresponding concentration in the North ducts. Thus the South duct had a higher minimum detectable flow. The minimum leak rates shown in Table 2 result from the concentration in the ducts, the ventilation flow rate and the minimum detectable tracer gas concentration, which was estimated to be 50 ppt. No tracer gas was detected inside either the North or South tents. This means there was no unfiltered in-leakage from this

potential path identified during the self-assessment. The accident analysis conservatively assumed 2 cfm of unfiltered in-leakage from this source.

4.3 Other Component Tests.

The pressure measurements between areas inside the envelope to adjacent areas were not only positive but nearly the same from area to area. These pressure relationships demonstrate that there is no in-leakage through the measured control room boundaries. This is an important part of the Component Test method. The test results are shown in Table 3.

The self-assessment determined that the instrument air or service air systems were potential unfiltered in-leakage paths. No measurable unfiltered in-leakage was found during component testing (See Table 3).

In summary, including the tests in Section 4.2, no unfiltered in-leakage was found during component testing.

4.4 Integrated Tracer Gas Tests

The sum of the damper leak rates and the emergency pressurization airflow were used to estimate the total make-up flow rate to the control room envelope. The target tracer gas constant injection flow rate was then chosen based on this airflow. The tracer gas injection point was located within the airflow of the pressurization filter, downstream of its adsorber component. This allowed for intermittent airflow verification of the pressurization filter airflow during the performance of the constant injection test. This, along with the tracer gas "puff" at the start of the tests, allowed the tracer gas concentration to reach equilibrium in less time and at the desired target concentration. This was extremely important in order to have a valid test given the size of the envelope.

During the performance of the constant injection leak tests, the samples taken around the envelope showed that equilibrium was maintained to better than 2% (See Table 4). This indicates a well-balanced and maintained system, especially considering the volume , 423,000 ft^3, and the three distinct levels.

4.4 Unknown In-leakage

Two results are shown in Table 5. The first result was based on using the damper leak rates measured during the first week of testing. The constant injection tests were performed during the second week with different atmospheric conditions. The second result is based on correcting the damper leak rates for the change in atmospheric conditions from the nights the damper leak rate tests were performed to the atmospheric conditions when the constant injection tests were performed. The average outside temperature during train-A's damper leak rate tests was 69.5°F and for train-B was 68.6°F. During the constant injection tests, the average outside temperature was 52.4°F for train-A and 47.1°F for train-B. This change in temperature would raise the scfm coming out of the pressurization fan. This can be seen in Table 1 results when the pressurization flows measured during the damper leak tests are compared to those measured during the constant

injection tests. The increased volumetric output of the pressurization fans would lower the leak rate through the other leak paths. This was estimated by calculating the ratio of the correction factor to standard conditions for the night that the damper leak tests were performed to the nights that the corresponding constant injection leak rate test were performed. The total damper leak rate was decreased by this ratio.

It is postulated that the negative calculated unknown leak rate may be the result of the following two factors: (1) the opposed blade dampers used to isolate the normal flow path from the emergency filtration units do not seal well and are unlikely to come to the same position after cycling on and off (thus, the dampers would probably not have the same leak rate after opening and closing again) and (2) the negative pressure inside the duct can draw air through the vent caps during sampling and lower the resulting measured tracer gas concentration and thus bias the result to a higher leak rate through the damper than actual, although every effort was made to minimize this effect.

5.0 SUMMARY

- The Comanche Peak control room design meets the characteristics described in Section 5.3.2 of Appendix I of NEI 99-03. (Reference 6.2)
- The total boundary leakage was determined by the Integrated Tracer Gas Test method and the Component Test method.
- The negative calculated leak rate from the Integrated Tracer Gas Test method confirmed the no unfiltered in-leakage result from the Component Test method.
- The component testing accounted for all of the total boundary leakage.
- Filtered in-leakage was determined to be greater than that assumed in the accident analysis.
- Regulatory limits General Design Criterion 19 of Appendix A of 10CFR50 were met.

6.0 REFERENCES

6.1 Letter from Alan C. Passwater to the NRC Document Control Desk, "Submittal of the Strategic Teaming and Resource Sharing (STARS) Engineering Report on Control Room In-leakage", AmerenUE letter to the NRC Document Control Desk, dated March 5, 2001 (ULNRC-04402).

6.2 Nuclear Energy Institute NEI 99-03, "Control Room Habitability Assessment Guidance", June 2001.

Figure 1

Comanche Peak Damper Leak Test Paths

COMANCHE PEAK

Train A in Emergency Recirculation Train B OFF

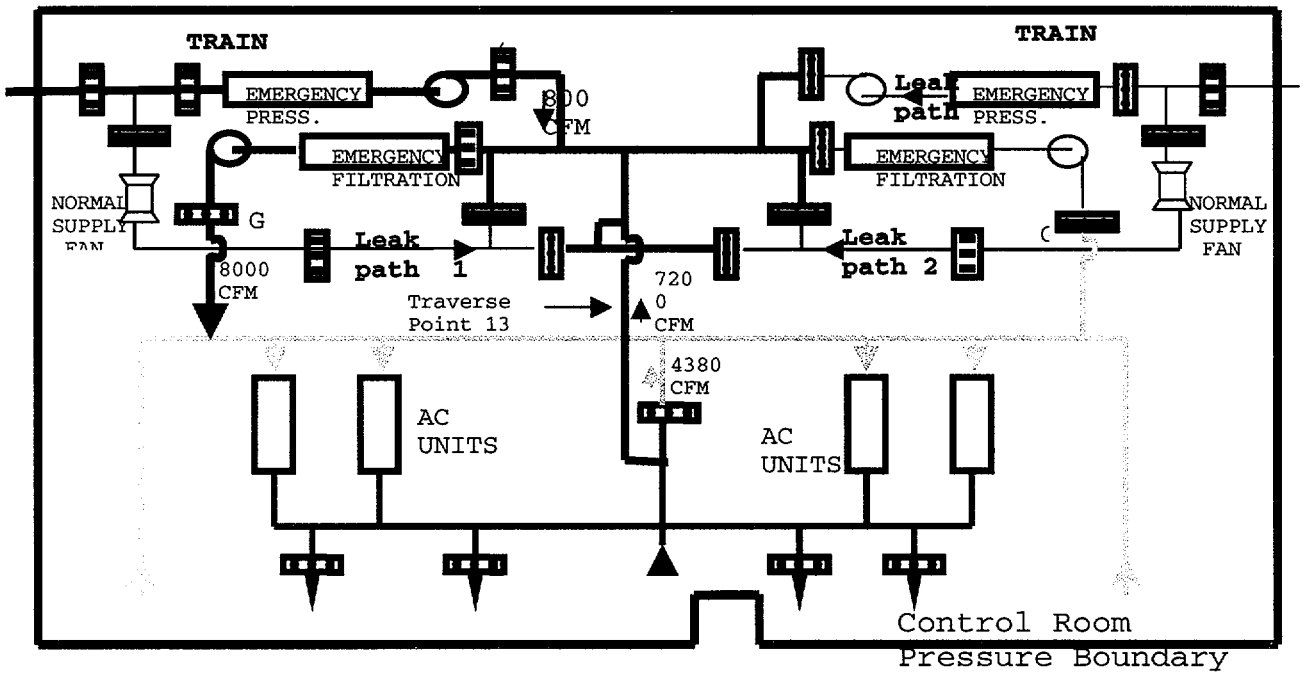

COMANCHE PEAK

Train B in Emergency Recirculation Train A OFF

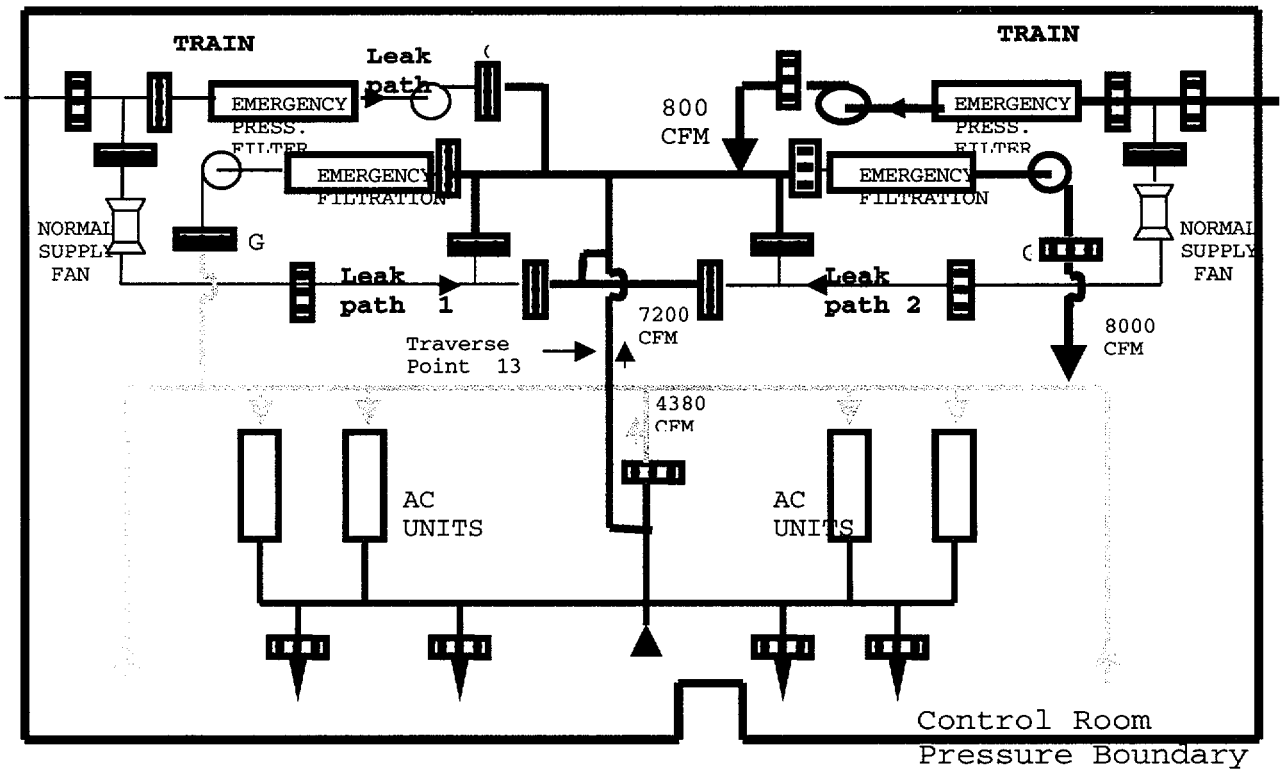

Figure 2

Control Room Positive Pressure Test Results

Control Room Area Elev. 830 (Rm 135) to *	"B" Train D/P (inches wg.)	"A" Train D/P (inches wg.)
* Outside Atmosphere	0.44 to 0.51	0.44 to0.48
*Cable Spread Room (Rm133)	0.43	0.43
*Cable Spread Room (Rm134)	0.46	0.44
*Auxiliary Building (Rm 226)	0.72	0.77
*Stairwell 138	0.65	0.61
*Stairwell 145	0.66	0.65
TSC Area Elev. 840 (Rm 148) to *		
*Outside Atmosphere	0.45	0.44
* Stairwell 149	0.61	0.60
Mechanical Equipment Room Elev. 852 (Rm 150) to *		
*Outside Atmosphere	0.45	0.46
*Auxiliary Bldg. (Rm 241)	0.71	0.74
*Mechanical Equip. Room (Rm 151)	0.73	0.73
*Mechanical Equip. Room (Rm 151B)	0.46	0.45
*Stairwell 152	0.62	0.60
Mechanical Equipment Room Elev. 852 (Rm 150A) to *		
*Outside Atmosphere	0.47	0.45
*Auxiliary Bldg. (Rm 241)	0.71	0.75
*Mechanical Equip. Room (Rm 151)	0.73	0.75
*Mechanical Equip. Room (Rm 151A)	0.46	0.45

Palo Verde Control Room In-leakage Test Summary

1.0 INTRODUCTION

As part of a comprehensive control room habitability program, Palo Verde also contracted the performance of component and integrated leak tests of their Unit 2 control room pressure boundary.

Two primary factors were catalyst for the Palo Verde Nuclear Generating Station (PVNGS) expanding their existing control room habitability program. These factors caused PVNGS to perform research and implementation activities for validating licensing basis assumptions associated with PVNGS Unit 2's control room unfiltered in-leakage. They can be identified as:

1. A Memorandum from the Office of the Nuclear Reactor Regulation (dated September 11, 2000) discussing the subject of "Interim Procedure for Handling Reviews Of Power Reactor License Amendments Having An Impact On Control Room Habitability (TAC No. MA4471").
2. The PVNGS Steam Generator Replacement Project (SGRP) was preparing to submit a license amendment in June 2001 that would indeed be impacted by the above-mentioned interim procedure.

Therefore, based upon interactions with the ASME Committee on Nuclear and Gas Treatment (CONAGT), the Nuclear HVAC Utilities Group (NHUG), and the Strategic Teaming And Resource Sharing (STARS) Initiative, which emphasized a heightened awareness of the control room unfiltered in-leakage validation issue, PVNGS proceeded to expedite its plan to validate its unfiltered in-leakage criteria. The general plan was to perform a control room habitability assessment of the PVNGS Unit 2 control room, identify weaknesses and/or vulnerabilities in the habitability design and programs, correct any such identified deficiencies, and to find the best approach to validating unfiltered in-leakage and implement that course of action.

The first stage of the plan was to perform a self-assessment similar to that defined in NEI 99-03 (Reference 1). Since STARS had already devised an excellent self-assessment approach to control room habitability, PVNGS adopted this format for this assessment.

The Palo Verde control room design meets the characteristics described in Section 5.3.2 of Appendix I of NEI 99-03 (Reference 7.1) with one exception. The majority of control room HVAC equipment and ducting is located outside the control room envelope. However, this design does not result in any vulnerabilities to in-leakage into the control room envelope from the HVAC system outside the control room. A more detailed description of the Palo Verde design and the results of the self-assessment performed at Palo Verde follows in Section 2.0 of this attachment.

2.0 CONTROL ROOM ENVELOPE AND HVAC SYSTEM DESIGN

Each of the three PVNGS reactor units have a separate, but virtually identically designed, control room and habitability (HVAC) system. The Palo Verde control room design meets the characteristics described in Section 5.3.2 of Appendix I of Reference 7.1, with one exception. The majority of control room HVAC equipment and ducting is located outside the control room envelope. However, this design does not result in any vulnerabilities to in-leakage into the control room envelope from the HVAC system outside the control room.

2.1 The Control Room Envelope (CRE)

Each PVNGS control room complex is a simple one-floor design with excellent boundary integrity. Thus, the main control room is limited to one elevation. The control room envelope's pressure boundary consists of the outside walls, the ceiling, and the floor. Additionally, the essential duct and related components (i.e., fan, dampers, NATS housing, etc.) outside the control room envelope are part of the pressure boundary. There are two personnel entrances that penetrate the outside walls. Each entrance is a double-door barrier (vestibule design) and is considered an air lock. The CRE's 140' elevation pressure boundary is shown in Figure 1. The figure does not include the associated ducts and components outside the 140' elevation that is part of the pressure boundary.

2.2 The Control Room HVAC System

The control room's normal and essential HVAC is designed Quality (Q) Class. The control room's essential ventilation system design combines the cooling and radiological filtration functions into one system. Located at the 74' elevation are each essential train's fan, nuclear air treatment system (NATS), connecting ducts, dampers, cooling coils and related chiller components. Q-Class duct transfers the air to and from the ventilation components on the 74' elevation to the 140' elevation CRE. System components within the CRE are isolation dampers, ducts, and diffusers.

Key design elements of each control room essential HVAC system are that the fan pressurizes the NATS and associated supply duct which negates in-leakage; The essential cooling coil is attached to the NATS, and utilizes one fan operation; and outside makeup air (pressurization air) enters upstream of the fan, allowing the makeup air to draft into the system by the negative pressure of the fan.

The control room ventilation system has three main modes of operation. They are the Normal Mode, the Pressurization Mode (using makeup air to pressurize the CRE), and the Recirculation Mode (as defined as an isolation mode or isolation of the makeup air, recirculating the volume of air within the CRE). In response to a radiological accident, the control room HVAC system automatically aligns as shown in Figure 2. The return air from the CRE is mixed with a nominal 1000 scfm of outside air. The mixed air of approximately 28,600 scfm is filtered and cooled by either train-A or train-B filtration units. Air exits the filtration units and returns to the CRE. No air is supplied to or returned from the Communications Equipment Room or Inverter Room in this mode of operation. Exhaust fans servicing the control room restrooms and kitchen area are isolated by means of dampers that were designed and procured to be bubble tight.

The overall effect is that the system is pressurized from the fan discharge up to and including the CRE and any part of the control room HVAC system outside the 140' elevation CRE that is under negative pressure with respect to the adjacent space is filtered prior to returning to the CRE.

2.3 Self-Assessment Results

A self-assessment of control room habitability was performed at Palo Verde in June, 2000, in a manner similar to the other STARS plants as described in Reference 7.2. The assessment team concluded that the Palo Verde control room envelope and ventilation systems are designed, operated, and maintained in accordance with the plant licensing basis and have a low susceptibility for allowing unfiltered in-leakage into the control room.

The assessment team identified one component that was vulnerable to unfiltered in-leakage. The control building supply fan has a duct that penetrates through the control room envelope (as it enters and exits, North to South) to supply air to the 140' elevation of the Corridor Building. The fan to this non-control room ventilation duct does not automatically stop on an ESF actuation signal to pressurize the CRE. This is a potential source of unfiltered in-leakage into the control room on the basis that the duct has the potential to become more pressurized than the surrounding CRE.

3.0 DESCRIPTION OF TESTS PERFORMED

The selection of injection and sample points, the scheduling of work, and the development of site-specific procedures were done in a manner similar for the preparations of testing at Comanche Peak. Site-specific procedures were developed for the constant injection leak rate testing of the control room envelope and leak rate testing of a non-control room ventilation duct within the control room pressure boundary.

3.1 Duct Leak Test

A leak test on the non-control room ventilation system duct section that passes through the CRE was performed with the control room HVAC system in the emergency pressurization mode. The purpose for performing the duct leak test was to evaluate and compare the results against the results of the integrated tracer gas test. If the results were comparable, the duct leak test would be considered for incorporation into the preventative maintenance program and tracked as a design basis/maintenance rule parameter. This would be performed as part of an overall component test method and used as an alternative to performing any further integrated tracer gas tests.

The test procedure was based on the pressure decay method described in Section 6.5.3 of ASME N510-1989, "Testing of Nuclear Air Treatment Systems." The section of duct tested was blanked off and the test volume was calculated. A test fan was connected to raise the pressure in the duct to 1.25 inches water gauge (in. wg). After the initial pressure stabilized, the fan was isolated from the duct and the time for the pressure to decay to 0.75 in. wg was determined.

During the testing period, temperature and relative humidity were monitored in the spaces that included the section of duct tested. These parameters would be factored into the leak rate calculation.

3.2 CRE Positive Pressure Test

The purpose of this test was to evaluate the pressure relative to the CRE interior against the pressures relative to the control room's adjacent area air spaces. This enhanced pressure test would be considered for incorporation into the preventative maintenance program and tracked as a design basis/maintenance rule parameter. This would be performed as part of an overall component test method and used as an alternative to performing any further integrated tracer gas tests.

The air pressure in the CRE relative to adjacent areas was measured with control room HVAC train-B in the pressurized mode and train-A in isolation mode. This test was repeated with train-A in the pressurized mode and train-B in isolation mode. Pressure was measured at 13 locations within the CRE and 26 locations outside the CRE in adjacent areas. These measurement locations were determined to represent the differential pressure across the entire CRE boundary. Measurements were taken using a calibrated pressure detector, NUCON Model PD-C. The PD-C pressure detector has a linear range of +/- 20" w.g., a resolution of 0.01" w.g., and measurement repeatability of within 0.02" w.g. The effects of elevation and the environment were taken into account.

3.3 Integrated Tracer Gas Test

The purpose of performing the tracer gas on the Unit 2 control room was to ultimately validate the PVNGS licensing basis assumption for control room system unfiltered in-leakage for the support of the SGRP license amendment. However, secondary benefits associated with the tracer testing evolution would include 1) validating the assumed control room volume used in habitability calculations and 2) comparing the system airflow measurement results between the pitot tube method and tracer gas method. These benefits would be evaluated for future use and incorporated as needed.

The test procedure was developed in reference to two primary standards. ASTM E741-2000, "Standard Test Method for Determining Air Change in a Single Zone by Means of Tracer Gas Dilution", provided guidance for performing the constant injection method and the concentration decay method. The constant injection method was used as the primary data collection method for determining in-leakage. The concentration decay method was used as a means to validate the constant injection method data. ASTM E2029-1999, "Standard Test Method for Volumetric and Mass Flow Rate Measurement in a Duct Using Tracer Gas Dilution", was used to perform airflow measurements of the outside makeup air (pressurization air) and the total supply air to the control room. Sulfur hexafluoride (SF_6) was used as the tracer gas in the performance of these tests.

On April 24th, airflow measurements were performed to determine the outside airflow and the total recirculation airflow for train-B, with train-B in the pressurized mode and train-A in the isolation mode. This configuration was used to enhance control room tracer/air mixing and to

ensure a homogeneous concentration within the entire CRE, which includes the train-A duct. Prior testing confirmed that the use of the opposite train in the isolation mode had no affect on the operating parameters of the train in pressurization mode.

On April 25th, with the control room HVAC system aligned as described above, the in-leakage into the CRE was determined first by using the constant tracer gas injection method. To begin, a target CRE tracer concentration is calculated based upon the estimated volume of the control room envelope. Then, a known volume of tracer gas is injected at a known rate into the CRE to bring the tracer gas concentration up to the target value, where the concentration would stabilize and reach equilibrium. To reach the CRE concentration-equilibrium more quickly, a known volume of a higher concentration of tracer is released. This is known as a "puff" release. As the injection of tracer continues, tracer/air samples (spatial samples) are taken at specific intervals throughout the injection period and analyzed to validate reaching the homogeneous mixture state, verifying equilibrium and to provide time-series sample data. After sampling was completed for the constant injection method, the injection of the tracer gas was stopped and samples for the concentration decay method were obtained in much the same manner and analyzed. The concentration decay method was performed to compare its results to the results of the constant injection method.

On April 26th, the in-leakage to the CRE was determined for train-A with train-A in the pressurized mode and train-B in the isolation mode using the constant tracer gas injection technique. Again, a "puff" of tracer gas was used to bring the concentration of tracer gas in the CRE up to a target value. Due to the successful validation of the constant injection method by the concentration decay test performed the previous day, no additional data verification of this type was performed.

For both tests performed on April 25th and 26th, the unknown in-leakage to the CRE was then calculated by subtracting the outside pressurization airflow from the leak rate obtained from the constant injection test.

4.0 TEST RESULTS

4.1 Duct Leak Test Results

The result of the duct leak test is as follows:

2.13 +/- 8.8 scfm "out-leakage"

4.2 CRE Positive Pressure Test Results

The results of the positive pressure test of the CRE boundary are presented in Table 1

Table 1 **CRE Positive Pressure Test Results**		
	Train-A operating	Train-B operating
Range of pressures inside the CRE	0.54 to 1.17 in. wg	0.57 to 1.20 in. wg
Range of pressures in adjacent areas outside the CRE	-0.08 to -0.11 in. wg	-0.11 to 0.00 in. wg
Lowest differential pressure across the CRE boundary	0.43 in.wg	0.57 in. wg
Total Leak Rate	**0 scfm**	**0 scfm**

4.3 Integrated Tracer Gas Test Results

The results of the integrated tracer gas test are presented in Table 2.

Table 2 **Integrated Tracer Gas Test Results** **(Constant Injection Method)**	
Train-A Outside Air Flow	610 +/- 51 scfm
Train-A Total In-leakage	610 +/- 10 scfm
Train-A In-leakage	**0 +/- 52 scfm**
Train-B Outside Air Flow	610 +/- 22 scfm
Train-B Total In-leakage	610 +/- 21 scfm
Train-B In-leakage	**0 +/- 30 scfm**

For additional information, the train-B total in-leakage using the concentration decay method of testing was determined to be 610 +/- 30 scfm. The concentration decay method is another method of the E741 Integrated Tracer Gas Test method. The test result was consistent with that obtained from the constant injection test method.

4.4 Estimation of Random Errors

The general equation for the random error associated with the use of tracer gas to measure the flow of gas in a duct is:

$$s_F = F\sqrt{\frac{s^2_{(C_D - C_U)}}{(C_D - C_U)^2} + \frac{s^2_{F_I}}{F_I^2}}$$

where:

$s^2_{F_I}$ is the square of the standard deviation of the injection flowrate, and $s^2_{(C_D - C_U)}$ is the square of the standard deviation of the difference in the downstream and upstream tracer concentration. In

the case of the Train "A" and "B" outside airflows, the upstream concentration was zero, so the above equation simplifies to:

$$s_F = F\sqrt{\frac{s_{F_I}^2}{F_I^2} + \frac{s_D^2}{C_D^2}}$$

As an example, for the outside airflow for Train "B" we have $\frac{s_{F_I}^2}{F_I^2}$ = 7.8 x 10^{-7} and $\frac{s_D^2}{C_D^2}$ = 1.3 x 10^{-3}, F = 610 SCFM . s_F is then = ± 22 SCFM.

Constant Injection Tests:

The standard deviation of the calculated inleakage, s_Q, for the constant injection method with a constant leak is given by:

$$s_Q = Q\sqrt{\frac{s_{Q_{SF_6}}^2}{Q_{SF_6}^2} + \frac{s_{C_{acg}}^2}{C_{avg}^2}}$$

where Q is the inleakage flow, $s_{Q_{SF_6}}^2$ is the square of the standard deviation of the tracer gas injection flow rate, and $s_{C_{acg}}^2$ is the square of the standard deviation of the average CRE concentration.

As an example, from page 11 of the Tracer Gas Testing Report (not included with this letter) for the inleakage calculated with Train "B" in recirculation and Train "A" in isolation mode we have Q = 610 SCFM, $\frac{s_{C_{acg}}^2}{C_{avg}^2}$ = 1.3 x 10^{-3} and $\frac{s_{Q_{SF_6}}^2}{Q_{SF_6}^2}$ = 1.7 x 10^{-6}, so that s_Q = ± 22 SCFM.

5.0 DISCUSSION OF TEST RESULTS

5.1 Duct Leak Rate Test

After opening the non-control room ventilation ducting to prepare for the test, it was determined that the pressure inside the duct was negative with respect to the pressure in the CRE. This explains the out-leakage result instead of the potential in-leakage expected from the self-assessment findings. Therefore, it may be concluded that the self-assessment finding of the duct being a potential in-leakage source is not an in-leakage contributor during operation of the control room's essential HVAC system. The causal factor for the potential becoming adverse would be from an abnormal system configuration of the non-control room system (the control building ventilation) that causes the static pressure of the subject duct to rise above normal parameters, challenging the CRE pressure. As the potential exists, the self-assessment is correct in advising the component test for system/component performance monitoring.

5.2 CRE Positive Pressure Test

The relative pressures between areas inside the CRE to adjacent areas were sufficient to conclude that no unfiltered in-leakage exists across the CRE boundary. The result of this test and the result of the duct leak rate test demonstrated that there is no unfiltered in-leakage across the CRE boundary for Unit 2.

5.3 Integrated Tracer Gas Tests

The results of these tests confirm the results from the component tests. The uncertainty of the results is primarily driven by the uncertainty in determining the outside makeup air (pressurization air) airflow rate. Palo Verde's control room dose analysis assumes an unfiltered in-leakage of 61 scfm (this includes 10 scfm for ingress and egress). This assumption was made to account for uncertainty in the integrated tracer gas test results using the method from ASTM E741. Palo Verde is reasonably assured that there is no actual unfiltered in-leakage across the CRE boundary. Although the margin to the regulatory limit allowed use of this conservative assumption, the margin is reduced such that future plant changes could unnecessarily challenge the limit.

6.0 SUMMARY

- The Palo Verde Unit 2 control room design meets the characteristics described in Section 5.3.2 of Appendix I of reference 7.1 with one exception.
- Although the majority of the control room HVAC system is located outside the CRE, the simplified one-floor CRE design with excellent boundary integrity, simplified control room HVAC design with quality ductwork results in no potential unfiltered in-leakage paths into the CRE.
- The total boundary leakage was determined by the Integrated Tracer Gas Test method and the Component Test method.
- The Integrated Tracer Gas Test method confirmed the no unfiltered in-leakage result from the Component Test method.
- The component testing accounted for all of the total boundary leakage.
- Testing verified that the actual control room unfiltered in-leakage met the license basis parameter of less than 61 scfm.

7.0 REFERENCES

7.1 Nuclear Energy Institute NEI 99-03, "Control Room Habitability Assessment Guidance", June 2001.

7.2 Letter from Alan C. Passwater to the NRC Document Control Desk, "Submittal of the Strategic Teaming and Resource Sharing (STARS) Engineering Report on Control Room In-leakage", AmerenUE letter to the NRC Document Control Desk, dated March 5, 2001 (ULNRC-04402).

Figure 1

Control Room Pressure Boundary (CRPB)

CRPB Drawing

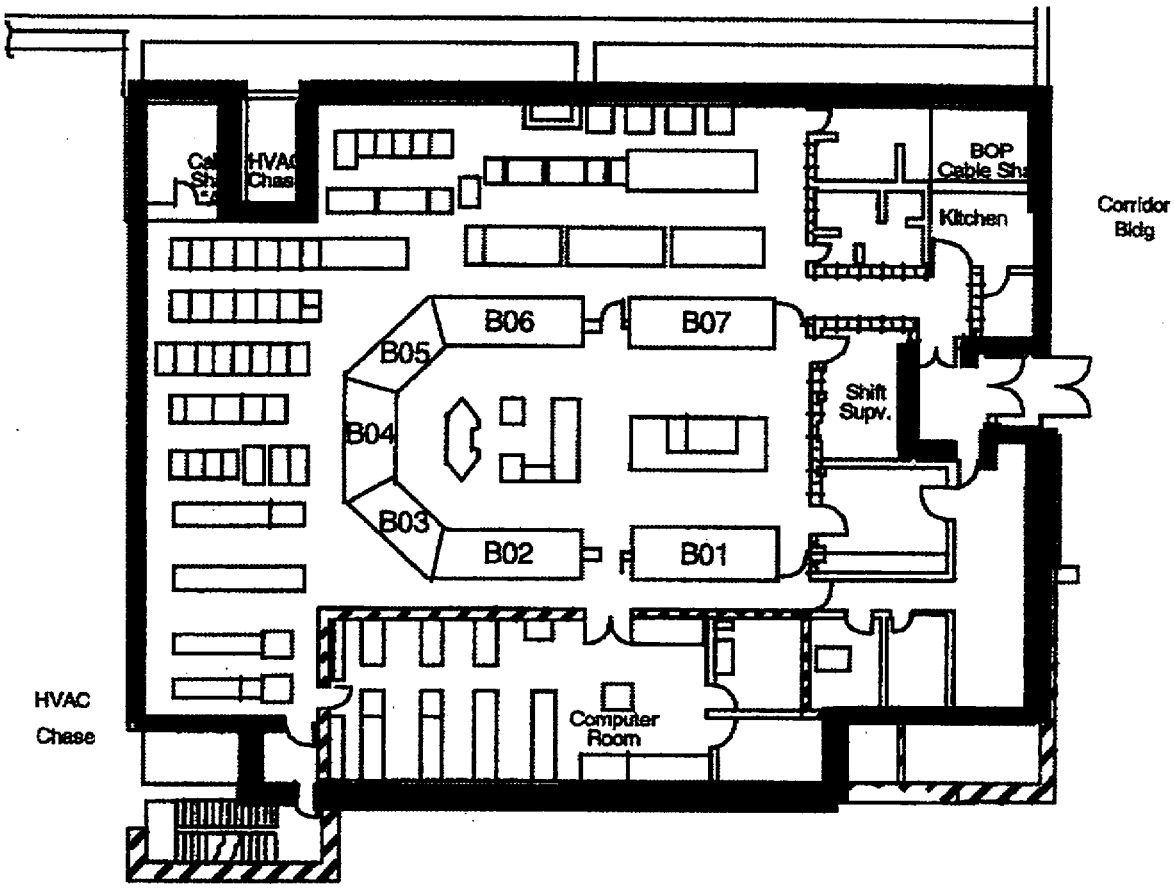

NOTE

For the purpose of this procedure, the Control Room Pressure Boundary is defined by the floor, ceiling, doors, and walls bounded by the darkly outlined portion of this drawing together with the interior walls, doors, floors and ceilings of the two airlock chambers.

Figure 2

Palo Verde Control Room Ventilation System

Alignment in the Emergency Pressurization Mode

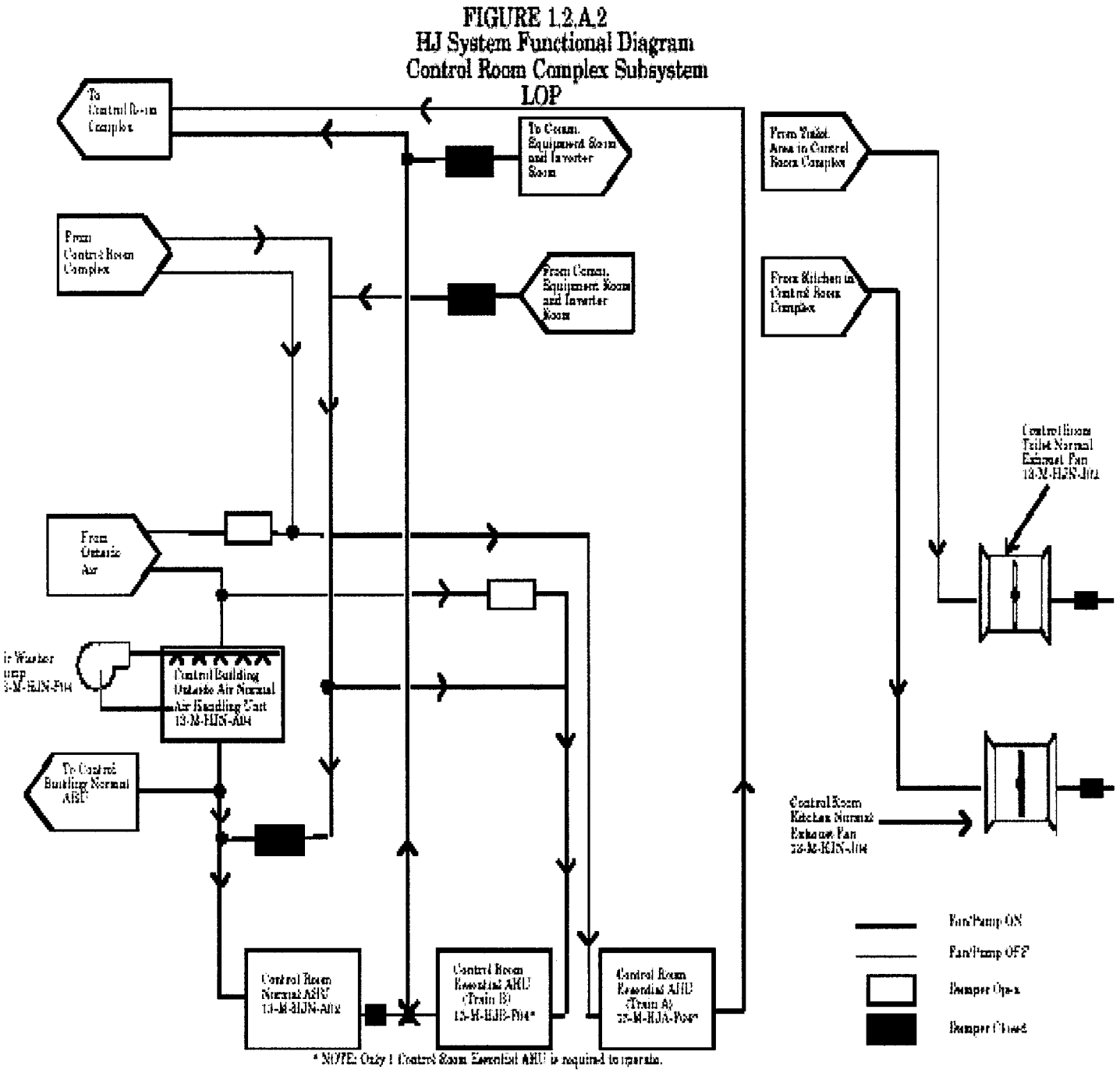

Attachment 3

STARS Position on NRC Draft Regulatory Guide DG-1115, Sections 1.1 and 1.2

Sections 1.1 and 1.2 are NRC exceptions to the endorsement of Appendix I "Testing Programs", of Nuclear Energy Institute NEI 99-03, "Control Room Habitability Assessment Guidance", June 2001 (Reference 1). Section 1.1 discusses baseline testing. Section 1.2 discusses component testing. The discussion below presents a discussion on a number of items presented in Section 1.1 and 1.2 where STARS differs from the position presented in the regulatory guide. STARS members have adopted the engineering position that the Component Test method will reliably determine control room in-leakage.

Section 1.1, "Baseline Testing"

Item No. 1

NRC staff position:

The staff has determined that a baseline integrated test should be performed, using test methods described in ASME E741 (Reference 2), for each control room envelope (CRE) at plants holding operating licenses.

STARS position:

STARS agree that an integrated baseline test should be performed to determine control room in-leakage to validate the basis in the assumption used in accident safety analyses. However, the integrated test method should allow the option of the Component Test method described in Reference 1.

Although ASTM E741 is a valid method for determining the air change in a single zone, and thus a method to infer in-leakage into the zone, the test has some disadvantages when applied to the low-leakage, positively-pressurized control rooms that exist at the STARS facilities. Industry experience with this testing method has generally demonstrated that the test results have a high degree of uncertainty for pressurized control rooms. The uncertainty can be an order of magnitude larger than the measured unknown in-leakage. Licensees may be required to account for this uncertainty in their dose analysis calculations. The dose margin to regulatory limits can unnecessarily be used up to account for the uncertainty in the test results. In fact, the magnitude of the uncertainty may, in some cases, exceed the available margin to regulatory limits. The Component Test method has demonstrated test results with much less uncertainty than results from integrated tracer gas testing.

The Component Test method focuses on specific components. Therefore, the source of in-leakage is both quantified and identified. An Integrated Tracer Gas Test does not require that the source of in-leakage be identified as long as the accident analysis can support the result. Therefore, an opportunity to improve the material condition of a leaking component may be lost.

Thus far, the integrated tracer gas tests performed in accordance with ASTM E741 have required contractor support. These tests have been relatively expensive to perform – on the order of $50K to $100K per control room. Most component tests are within the capability of the plant staff. Therefore, the cost of these tests are generally less expensive than the ASTM E741.

The Advisory Committee of Reactor Safeguards (ACRS) commented that "The staff should require that the results of component testing be validated by comparison with those tracer gas testing in several control room configurations prior to the staff agreeing to the exclusive use of component testing for pressurized control rooms" (Reference 3). The ACRS also stated that "The staff will need to confirm that component testing can reliably establish the total unfiltered in-leakage" (Reference 3).

The comparison tests described in Attachments 1 and 2 of this letter provide the justification for the exclusive use of component testing for pressurized control rooms. STARS considers that the testing at the two facilities represents a sufficient number of control room configurations because of the similarities in the control room designs at the STARS plants. These designs are described in Reference 4. The comparison test results, discussed in Attachments 1 and 2, confirm that component testing can reliably establish the total unfiltered in-leakage.

Item No. 2

NRC staff position:

The staff has determined that an integrated test using the test methods of ASME E741 is necessary to confirm the appropriateness of the selection of component tests that are selected for testing using the Component Test method. The staff cites industry experience with tracer gas testing performed to date that indicated unexpectedly high in-leakage results at control room envelopes that had previously undergone differential pressure testing of the boundary and that these unexpected results were often associated with unrecognized in-leakage pathways.

STARS position:

During interactions with the NRC staff through the NEI Control Room Habitability Task Force, the staff often cited testing performed on reactor control rooms of early design. These control rooms were not of the robust design that are characteristic of the STARS plants' control rooms and typically had in-leakage rates in the hundreds to thousands of scfm. Assessments that were conducted typically identified a number of vulnerable areas. Significant sealing efforts were performed prior to testing. It is not known if separate components tests were conducted at these

older facilities to compare with the integrated tracer gas test results. It is also not known to what degree of thoroughness the positive pressure test was performed.

The STARS self-assessment process for identifying components vulnerable to in-leakage is a logical review of the system design. The design is validated by field walkdown. The assessment also takes advantage of industry experience to ensure potential in-leakage paths are assessed. The identification of those components for testing is similar to identifying containment building penetrations for Appendix J local leak rate testing. The comparison testing conducted at the Comanche Peak and Palo Verde facilities provides a high level of confidence that potential in-leakage sources did not go undetected. An integrated test using the test methods of ASME E741 can confirm the selection of component tests for the Component Test method. However, the E741 test is not necessary provided Reference 1 is followed for determining in-leakage using the Component Test methodology.

Item No. 3

NRC staff position:

The staff states that one inherent limitation of the differential pressure test method is that this test is not a direct measurement of in-leakage.

STARS position:

The differential pressure test method is a direct measurement of in-leakage for the areas of the boundary tested. If the differential pressure is measured to be sufficiently positive with respect to adjacent spaces, then one can confidently quantify the "in-leakage" as zero. Any leakage across the measured boundary would have to be "out-leakage."

Section 1.2, "Component Testing"

Item No. 1

NRC staff position:

The staff considers the CRE design characteristics provided in Section 5.3.2 of Appendix I of Reference 1 as prerequisites to be met for a component test to be found acceptable.

STARS position:

The features discussed in Section 5.3.2 support the selection of component testing as a preferred method for determining CRE in-leakage. If justification can be provided, some features may not be necessary for using component testing. In the case of the testing conducted at the Palo Verde facility, as presented in Attachment 2, the majority of the control room HVAC equipment is

located outside the CRE. However, the system design resulted in no vulnerable in-leakage paths from this system into the envelope.

Item No. 2

NRC staff position:

The staff found that the following three additional conditions are to be met for component testing to be acceptable:

1. An integrated in-leakage test, as discussed in Sections 5.3.1 and 5.4.1 of Appendix I in Reference 1, is performed to determine the total boundary leakage.

2. Component testing accounts for no less than 95 percent of the total boundary leakage.

3. Approximately 20 percent margin exists between the radiation doses or hazardous chemical concentrations calculated using the measured total boundary leakage and the corresponding acceptance criterion. The 20 percent margin compensates for the uncertainties involved with the companion differential pressure testing and the identification of vulnerable components.

STARS position:

1. The Component Test method is an acceptable method to determine the total boundary leakage for STARS control room designs.

2. If component testing is performed in accordance with the Reference 1 guidance, the licensee should reasonably conclude that total boundary leakage has been determined. Comparison leak rate testing has been conducted at two STARS facilities to demonstrate that component testing can determine total boundary leakage. The 95 percent criterion assumes that the Integrated Tracer Gas Method has accurately established the total boundary leakage for making a comparison. It will most likely be difficult to quantitatively compare the results from two test methods with different magnitudes of uncertainty. For example, the Palo Verde measured unfiltered in-leakage using the integrated tracer gas testing was 0 +/- 52 scfm with the train-A ventilation system in the emergency mode. If the licensee established the in-leakage result as 52 scfm to be conservative, then the 0 unfiltered in-leakage, that was determined by component testing, would not meet the 95 percent criterion discussed in the draft guide.

3. Although STARS expects that component testing will accurately determine total boundary leakage, the establishment of a margin could be accepted if the margin was applied to the measured in-leakage value and not the margin between the calculated radiation dose and acceptance criterion. The changing of the margin for radiation dose is already controlled by 10CFR50.59. It would be more acceptable to apply a margin that is a percent of measured in-

leakage to the input in-leakage value in the radiological dose calculation. This complements the conservatisms applied to other inputs into this calculation. If this method of application of margin is accepted, it should also be applied to the measured in-leakage results from the performance of an integrated tracer gas test if a plant chooses to use that test method.

SUMMARY:

If performed in accordance with Reference 1, the Component Test method is an acceptable integrated method for determining control room total boundary leakage. The results from component testing do not require validation by performance of additional integrated tracer gas testing. The Component Test method has many strengths for low-leakage, positively-pressurized control room designs for which the Integrated Tracer Gas Test method is less reliable.

REFERENCES:

1. Nuclear Energy Institute NEI 99-03, "Control Room Habitability Assessment Guidance", June 2001.
2. ASTM E741, "Standard Tests Methods for Determining Air Change in a Single Zone by Means of a Tracer Gas Dilution."
3. D.A. Powers, ACRS, Letter to W.D. Travers, USNRC, Subject: Nuclear Energy Institute Draft Report NEI 99-03, "Control Room Habitability Assessment Guidance", December 14, 2000.
4. Letter from Alan C. Passwater to the NRC Document Control Desk, "Submittal of the Strategic Teaming and Resource Sharing (STARS) Engineering Report on Control Room In-leakage", AmerenUE letter to the NRC Document Control Desk, dated March 5, 2001 (ULNRC-04402).
5. Draft Regulatory Guide DG-1115, "Demonstrating Control Room Envelope Integrity at Nuclear Power Reactors", March 2002.