SOUTHERN CALIFORNIA
EDISON
An EDISON INTERNATIONAL℠ Company

Dwight E. Nunn
Vice President

June 14, 2002

U. S. Nuclear Regulatory Commission
Document Control Desk
Washington, DC 20555

Subject: **Docket No. 50-361**
Special Report: Inservice Inspection of Steam Generator Tubes, Cycle 12
San Onofre Nuclear Generating Station, Unit 2

Gentlemen:

On June 2, 2002, Southern California Edison (SCE) completed the inservice inspection of steam generator tubes at San Onofre Nuclear Generating Station Unit 2. Technical Specification (TS) 5.7.2.c requires SCE to:

- Report the number of tubes plugged and tubes sleeved in each steam generator within 15 days of completing the inspection.
- Report the results of the steam generator tube inspections which fall into Category C-3 prior to resumption of plant operation. This report is required to include a description of the investigations conducted to determine the cause of the tube degradation and corrective measures taken to prevent recurrence.
- Report the complete results of steam generator tube inspections within 12 months of inspection completion.

The attachment to this letter, "Special Report – Inservice Inspection of Steam Generator Tubes," satisfies these requirements. This report also follows the guidance contained in NEI 97-06, Rev. 1, "Steam Generator Program Guidelines," dated January 2001 and contains no new commitments.

If you require any additional information, please advise.

Sincerely,

Attachments:

cc: E. W. Merschoff, Regional Administrator, NRC Region IV
A. B. Wang, NRC Project Manager, San Onofre Units 2 & 3
C. C. Osterholtz, NRC Senior Resident Inspector, San Onofre Units 2 & 3
Institute of Nuclear Power Operations (INPO)

P. O. Box 128
San Clemente, CA 92674-0128
949-368-1480
Fax 949-368-1490

A047

SPECIAL REPORT - INSERVICE INSPECTION OF STEAM GENERATOR TUBES

Regulatory Reporting Requirements

Reporting Requirement 5.7.2.c of Appendix A, Technical Specification to Facility Operating License NPF-10, requires the number of tubes plugged and tubes sleeved in each steam generator to be reported the Nuclear Regulatory Commission within 15 days following completion of the inspection.

Reporting Requirement 5.7.2.c of Appendix A, Technical Specification to Facility Operating License NPF-10, requires the results of steam generator tube inspections which fall into Category C-3 to be reported the Nuclear Regulatory Commission prior to resumption of plant operation.

Reporting Requirement 5.7.2.c of Appendix A, Technical Specification to Facility Operating License NPF-10, requires the complete results of steam generator tube inspections to be reported the Nuclear Regulatory Commission within 12 months following completion of the inspection.

Planned Inspection Scope

Table 1 summarizes the planned inspection program. Also, when indications by the bobbin probe were non-quantifiable or distorted, the inspection program included inspection with the Plus-Point Probe. Table 2 provides the list of Nondestructive Examination (NDE) techniques utilized for each degradation mechanism.

There were no significant inspection program scope expansions in response to inspection results.

Results

This report satisfies the listed regulatory reporting requirements.

The contents of this report were prepared using the guidance contained in NEI 97-06, Rev. 1, "Steam Generator Program Guidelines." The NEI guidance is an initiative to unify the industry approach towards steam generator issues and strengthen, where necessary, the steam generator program.

Table 3 summarizes the number of tubes repaired and active degradation mechanisms found. Each tube is only counted once in this listing, although it may also have an eddy current indication of a type below the point in the listing where it appears. The Appendices provide the complete results of the steam generator tubing inservice inspection.

Table 4 summarizes in-situ pressure and leak testing results. This particular testing demonstrated the structural and leakage (i.e., there was no leakage) integrity of the tested tubes consistent with EPRI guidelines. Eddy current testing results and in-situ pressure and leak testing results (Condition Monitoring) provide assurance that performance criteria in the NEI guidance (structural integrity and accident-induced leakage) were met during operation prior to this inspection.

Repair of Tubes

Table 5 provides an itemized listing of the tubes plugged in steam generator E-088 along with the corresponding Table 3 category specifying the indication orientation/location.

Table 6 provides an itemized listing of the tubes sleeved in steam generator E-088 along with the corresponding Table 3 category specifying the indication orientation/location.

Table 7 provides an itemized listing of tubes plugged in steam generator E-089 along with the corresponding Table 3 category specifying the indication orientation/location.

Table 8 provides an itemized listing of the tubes sleeved in steam generator E-089 along with the corresponding Table 3 category specifying the indication orientation/location.

Repair Methods, Number of Tubes Repaired and Effective Plugging Percentage

All tube plugging was performed using the design, materials, and installation methods of FRAMATOME ANP (FANP). A "roll" method was used for all tube plugs. One tube was "stabilized" in the vicinity of the top of the tubesheet using the design, materials, and installation methods of FANP.

All tube sleeving was performed using the welded sleeve design, materials, and installation methods of Westinghouse (formerly ABB Combustion Engineering). This repair method is specifically addressed in Technical Specification 5.5.2.11.f.1.j for Unit 2.

Forty-nine tubes were plugged, and seventy-five tubes were sleeved in Steam Generator E-088 during the Cycle 12 refueling outage. A total of 773 tubes have been plugged, and to date, 255 sleeved tubes are in service. The design number of tubes is 9350 tubes and the sleeve to plug equivalency ratio is thirty-eight sleeves per plug. The effective plugging percentage for E-088 is 8.4%.

Fifty-two tubes were plugged, and forty-three tubes were sleeved in Steam Generator E-089 during the Cycle 12 refueling outage. A total of 817 tubes have been plugged, and to date, 146 sleeved tubes are in service. The design number of tubes is 9350 tubes and the sleeve to plug equivalency ratio is thirty-eight sleeves per plug. The effective plugging percentage for E-089 is 8.8%.

Causes and Corrective Actions

The degradation detected during this inspection remained within the Technical Specification category C-3. There is no significant update from previous reports of causes and corrective actions for Category C-3 results. Thus, this portion of a previous report is provided below.

Actions have been taken to improve the secondary side chemistry environment for steam generator tubing in both Unit 2 steam generators. These actions have been reviewed by a panel of industry experts for application at SONGS. The expert panel concurs with these measures. The actions include:

1. Chemical cleaning of the entire tube bundle (full bundle) performed during the Cycle 9 refueling outage in December 1996.

2. Addition of an inhibitor (titanium dioxide) for IGA/SCC immediately after the chemical cleaning for maximum crevice penetration potential. This is ongoing.

3. Use of Ethanolamine (ETA) for pH control of the secondary fluids. This is ongoing.

4. Boric acid addition in the secondary side to help reduce denting of the tube supports and stress corrosion cracking of tubing. This is ongoing.

In addition, SCE reduced the reactor coolant temperature at the steam generator inlet (T-hot) by about 13°F. SCE expects this will reduce stress corrosion cracking of the tubing initiating from the inside diameter of the tubing. The first phase of this change, a reduction of about 4°F, was completed in January 1998. The final phase of this change, a reduction of an additional 9°F, was completed in February 1999.

Description of Tables and Appendices

Table 1 -	Summary of the Planned Inspection Program for the Unit 2 Cycle 12 (U2C12) Refueling Outage
Table 2 -	List of Nondestructive Examination (NDE) Techniques Utilized for Each Degradation Mechanism for the U2C12 Refueling Outage
Table 3 -	Number of Tubes Repaired and Active Degradation Mechanisms Found During the U2C12 Refueling Outage
Table 4 -	Summary of Results of In-Situ Pressure and Leak Testing for the U2C12 Refueling Outage
Table 5 -	U2C12 Refueling Outage Tubes Plugged, Steam Generator E-088
Table 6 -	U2C12 Refueling Outage Tubes Sleeved, Steam Generator E-088
Table 7 -	U2C12 Refueling Outage Tubes Plugged, Steam Generator E-089
Table 8 -	U2C12 Refueling Outage Tubes Sleeved, Steam Generator E-089
Appendix 1 -	Steam Generator Reference Information
Appendix 2 -	Legend for Appendices 3 and 4
Appendix 3 -	Inspection Summary, Steam Generator E-088
Appendix 4 -	Inspection Summary, Steam Generator E-089

Table 1 - Summary of the Planned Inspection Program for the Unit 2 Cycle 12 (U2C12) Refueling Outage

	Number of Tubes/Percentage of Tubes Steam Generator	
	E-088	**E-089**
Full length of tube with the bobbin probe (excluding sleeved regions and U-bends for Rows 1-3)	8626 / 100%	8585 / 100%
Hot leg expansion transition at the top-of-tubesheet with the Plus-Point Probe	8446 / 100%	8482 / 100%
Cold leg expansion transition at the top-of-tubesheet with the Plus-Point Probe	2680 / 31%	2646 / 30%
U-bend regions of Rows 1, 2, and 3 with both mid and high frequency Plus-Point Probes	181/ 100%	179 / 100%
Plus-Point Probe examinations of tube support intersections with dents greater than, or equal to, 2 volts	3293 / 100%	2097 / 100%
Plus-Point Probe examination of hot leg dings greater than, or equal to, 5 volts	118 / 100%	52 / 100%
Plus-Point Probe examination of all tube support intersections with quantified wear indications by the bobbin probe	362 / 100%	352 / 100%
Full length of sleeves with the Plus-Point Probe	180 / 100%	103 / 100%

Table 2 – List of Nondestructive Examination (NDE) Techniques Utilized for Each Degradation Mechanism for the U2C12 Refueling Outage

Indication Orientation/Location	Probe Type for Detection	Probe Type for Characterization
Axially oriented ID (initiated on the inside-diameter of the tubing wall) indications at tube support locations	Bobbin Plus Point (Note 1)	Plus Point Plus Point
Axially oriented OD (initiated on the outside-diameter of the tubing wall) indications at tube support locations	Bobbin Plus Point (Note 1)	Plus Point Plus Point
Axially oriented OD indications not associated with a tube support (freespan)	Bobbin	Plus Point
Circumferentially oriented ID indications near or below the expansion transition at the top of the hot leg tubesheet	Plus Point	Plus Point
Circumferentially oriented OD indications near the expansion transition at the top of the hot leg tubesheet	Plus Point	Plus Point
Axially oriented indications in the sludge pile region near the top of the hot leg tubesheet	Plus Point	Plus Point
Axially oriented ID indications near or below the expansion transition at the top of the hot leg tubesheet	Plus Point	Plus Point
Indications of wear at tube support locations	Bobbin	Plus Point

Note 1: Plus-Point technique is used at dents with greater than, or equal to, two volts.

TABLE 3 – Number of Tubes Repaired and Active Degradation Mechanisms Found During the U2C12 Refueling Outage

Category	Indication Orientation/Location	Steam Generator E-088	Steam Generator E-089
1	Tubes with axially oriented ID (initiated on the inside-diameter of the tubing wall) indications at tube support locations. (ID Axial @ Support)	4	2
2	Tubes with axially oriented OD (initiated on the outside-diameter of the tubing wall) indications at tube support locations. (OD Axial @ Support)	19	10
3	Tubes with axially oriented OD indications not associated with a tube support (freespan). (OD Axial @ Freespan)	6	8
4	Tubes with circumferentially oriented ID indications near the expansion transition at the top of the hot leg tubesheet. (ID Circ @ TSH)	30	12
5	Tubes with circumferentially oriented OD indications near the expansion transition at the top of the hot leg tubesheet. (OD Circ @ TSH)	8	17
6	Tubes with axially oriented OD indications in the sludge pile region near the top of the hot leg tubesheet. (OD Axial @ Sludge Pile TSH)	6	8
7	Tubes with axially oriented OD indications near the expansion transition at the top of the hot leg tubesheet. (OD Axial @ TSH)	0	0
8	Tubes with axially oriented ID indications near the expansion transition at the top of the hot leg tubesheet. (ID Axial @ TSH)	2	0
9	Tubes with axially oriented ID indications below the inlet top-of-tubesheet. (ID Axial below TSH)	26	9
10	Tubes with circumferentially oriented ID indications below the inlet top-of-tubesheet. (ID Circ below TSH)	9	1
11	Tubes with indications of wear at tube support locations. (Wear @ Support)	14	23
12	Tubes with volumetric indications. (OD Vol @ Miscellaneous)	0	2
13	Miscellaneous preventative plugging (not an active degradation mechanism). (Prevent @ Miscellaneous)	0	3
Total		124	95

TABLE 4

SONGS-2 IN SITU PRESSURE TEST LIST
S/G 88 MAY-2002

TUBE AND EDDY CURRENT INFORMATION									IN-SITU TEST RESULTS			
	TUBE INFORMATION			PLUS POINT DATA								
REGION	ROW	COL	LOCATION	LENGTH	VOLTS	Max. Depth %	PDA or Avg. Depth %	ORIENTATION	GPM @ NOPD	GPM @ MSLB	GPM @ NOPD POST MSLB	PRESURE 3xNOPD
EGGCRATE	27	115	05H + 0.01	0.65	0.31	93%	34%	OD AXIAL	0	0	0	5000

SONGS-2 IN SITU PRESSURE TEST LIST
S/G 89 MAY-2002

TUBE AND EDDY CURRENT INFORMATION									IN-SITU TEST RESULTS			
	TUBE INFORMATION			PLUS POINT DATA								
REGION	ROW	COL	LOCATION	LENGTH	VOLTS	Max. Depth %	PDA or Avg. Depth %	ORIENTATION	GPM @ NOPD	GPM @ MSLB	GPM @ NOPD POST MSLB	PRESURE 3xNOPD
EGGCRATE	13	119	06H - 0.18	0.18	0.24	71%	N/A	OD AXIAL	0	0	0	5000
LOW ROW U-BEND	1	165	DBH + 9.91	N/A	N/A	N/A	N/A	DATA QUALITY	0	0	0	5000

NOTES:

GPM = Gallons per Minute
NOPD = Normal Operation Pressure Differential
MSLB = Main Steam Line Break Pressure Differential
N/A = Not Applicable
OD = Degradation initiated on the outside diameter of the tubing
ID = Degradation initiated on the inside diameter of the tubing
PDA = Percent degraded area

TABLE 5 – SONGS U2C12 Refueling Outage Tubes Plugged
STEAM GENERATOR E-088

Row	Column	Reason for Plugging Tube (per Table 3)
4	12	OD Axial @ Sludge Pile TSH
15	13	OD Axial @ Support
37	13	OD Axial @ Freespan
80	24	OD Axial @ Support
84	24	OD Axial @ Support
78	26	OD Axial @ Support
85	27	OD Axial @ Support
88	30	OD Axial @ Support
90	40	OD Axial @ Support
21	49	ID Axial @ Support
18	58	OD Axial @ Support
13	61	OD Axial @ Support
33	69	OD Axial @ Support
145	73	Wear @ Support
46	74	Wear @ Support
46	78	Wear @ Support
51	79	Wear @ Support
53	81	Wear @ Support
55	85	ID Axial below TSH
147	85	Wear @ Support
56	86	Wear @ Support
143	87	OD Axial @ Support
56	88	ID Axial below TSH
147	89	Wear @ Support
54	90	Wear @ Support
56	90	Wear @ Support
145	91	Wear @ Support
47	99	Wear @ Support
44	100	Wear @ Support
39	101	Wear @ Support
54	108	OD Axial @ Freespan
31	109	ID Axial @ Support

TABLE 5 (CONT.) – SONGS U2C12 Refueling Outage Tubes Plugged
STEAM GENERATOR E-088

Row	Column	Reason for Plugging Tube (per Table 3)
133	109	OD Axial @ Freespan
28	112	OD Axial @ Support
27	115	OD Axial @ Support
29	115	OD Axial @ Support
22	116	ID Axial @ Support
18	118	ID Axial @ Support
37	119	ID Axial below TSH
10	120	ID Circ below TSH
18	124	OD Axial @ Freespan
87	133	OD Axial @ Support
105	133	OD Axial @ Support
21	159	OD Axial @ Support
4	162	ID Axial below TSH
32	164	OD Axial @ Support
22	166	OD Axial @ Freespan
22	168	OD Axial @ Freespan
24	170	OD Axial @ Support

TABLE 6 – SONGS U2C12 Refueling Outage Tubes Sleeved
STEAM GENERATOR E-088

Row	Column	Reason for Sleeving Tube (per Table 3)
17	27	ID Axial below TSH
17	35	ID Circ @TSH
8	36	ID Circ below TSH
18	36	ID Circ @ TSH
19	39	ID Circ @ TSH
16	44	ID Circ @ TSH
6	46	ID Circ below TSH
24	48	ID Circ below TSH
25	49	ID Circ @ TSH
45	55	OD Circ @ TSH
48	58	ID Circ below TSH
90	58	ID Circ @ TSH
17	61	ID Axial below TSH
12	62	ID Circ below TSH
62	62	ID Circ @ TSH
54	64	ID Axial below TSH
49	65	OD Axial @ Sludge Pile TSH
30	68	ID Axial @ TSH
36	68	ID Circ below TSH
37	69	ID Axial below TSH
65	69	ID Circ @ TSH
30	70	ID Axial @ TSH
68	70	ID Circ @ TSH
49	71	ID Axial below TSH
46	72	ID Axial below TSH
62	72	ID Circ @ TSH
82	72	ID Circ @ TSH
54	74	ID Axial below TSH
68	74	ID Circ @ TSH
44	76	ID Axial below TSH
67	83	OD Axial @ Sludge Pile TSH
86	86	OD Circ @ TSH

TABLE 6 (CONT.) – SONGS U2C12 Refueling Outage Tubes Sleeved
STEAM GENERATOR E-088

Row	Column	Reason for Sleeving Tube (per Table 3)
58	88	ID Axial below TSH
82	88	ID Circ @ TSH
71	89	OD Axial @ Sludge Pile TSH
68	90	OD Axial @ Sludge Pile TSH
56	92	ID Axial below TSH
77	93	OD Circ @ TSH
77	97	OD Circ @ TSH
81	97	ID Circ @ TSH
97	97	ID Circ @ TSH
64	98	OD Axial @ Sludge Pile TSH
74	100	OD Circ @ TSH
68	102	ID Circ @ TSH
41	103	ID Axial below TSH
61	103	ID Circ @ TSH
79	103	ID Circ @ TSH
52	104	ID Axial below TSH
51	105	ID Axial below TSH
36	106	ID Axial below TSH
72	106	ID Circ @ TSH
36	108	ID Axial below TSH
114	108	OD Circ @ TSH
49	109	ID Axial below TSH
67	109	OD Circ @ TSH
51	111	ID Axial below TSH
57	111	ID Axial below TSH
83	111	ID Circ @ TSH
22	112	ID Axial below TSH
23	113	ID Axial below TSH
65	113	ID Circ @ TSH
28	114	ID Axial below TSH
46	116	ID Circ @ TSH
55	117	OD Circ @ TSH
25	119	ID Circ below TSH

TABLE 6 (CONT.) – SONGS U2C12 Refueling Outage Tubes Sleeved
STEAM GENERATOR E-088

Row	Column	Reason for Sleeving Tube (per Table 3)
65	119	ID Circ @ TSH
27	121	ID Circ @ TSH
39	121	ID Circ @ TSH
65	121	ID Circ @ TSH
34	122	ID Axial below TSH
47	123	ID Circ @ TSH
18	126	ID Circ @ TSH
58	134	ID Circ @ TSH
15	135	ID Circ below TSH
12	138	ID Circ @ TSH

TABLE 7 – SONGS U2C12 Refueling Outage Tubes Plugged
STEAM GENERATOR E-089

Row	Column	Reason for Plugging Tube (per Table 3)
18	16	OD Axial @ Support
93	23	Wear @ Support
67	31	OD Axial @ Support
9	33	ID Axial @ Support
95	33	OD Axial @ Support
93	35	OD Axial @ Freespan
110	36	OD Axial @ Freespan
102	38	OD Axial @ Support
106	40	OD Axial @ Freespan
114	46	OD Axial @ Support
38	52	OD Axial @ Freespan
34	54	ID Axial @ Support
121	77	OD Axial @ Support
65	79	OD Axial @ Sludge Pile TSH
55	81	Wear @ Support
147	81	Wear @ Support
54	82	Wear @ Support
55	83	Wear @ Support
75	85	Wear @ Support
61	87	OD Circ @TSH
56	88	Wear @ Support
58	88	Wear @ Support
56	90	Wear @ Support
62	90	OD Circ @ TSH
145	91	Wear @ Support
52	92	Wear @ Support
54	92	Wear @ Support
55	95	Wear @ Support
71	97	Wear @ Support
48	98	Wear @ Support
50	98	Wear @ Support
45	99	Wear @ Support
51	99	Wear @ Support
38	102	Wear @ Support
35	105	ID Axial below TSH

TABLE 7 (CONT.) – SONGS U2C12 Refueling Outage Tubes Plugged
STEAM GENERATOR E-089

Row	Column	Reason for Plugging Tube (per Table 3)
73	105	Wear @ Support
44	108	Wear @ Support
68	112	OD Axial @ Freespan
13	119	OD Axial @ Support
4	120	OD Axial @ Support
19	121	OD Axial @ Support
79	121	Wear @ Support
22	126	OD Axial @ Freespan
120	128	OD Axial @ Freespan
2	154	OD Vol @ Miscellaneous
2	158	OD Vol @ Miscellaneous
74	160	Wear @ Support
38	164	OD Axial @ Support
1	165	Prevent @ Miscellaneous
3	165	Prevent @ Miscellaneous
1	173	Prevent @ Miscellaneous
14	174	OD Axial @ Freespan

TABLE 8 – SONGS U2C12 Refueling Outage Tubes Sleeved
STEAM GENERATOR E-089

Row	Column	Reason for Sleeving Tube (per Table 3)
39	37	ID Circ @ TSH
16	42	ID Circ @ TSH
47	45	ID Axial below TSH
100	46	OD Circ @ TSH
24	48	ID Circ @ TSH
29	49	OD Circ @ TSH
47	49	OD Circ @ TSH
50	52	OD Circ @ TSH
39	53	OD Axial @ Sludge Pile TSH
24	54	OD Circ @ TSH
30	54	OD Circ @ TSH
44	54	OD Axial @ Sludge Pile TSH
22	60	ID Axial below TSH
71	63	ID Circ @ TSH
31	65	OD Axial @ Sludge Pile TSH
22	66	ID Axial below TSH
70	66	ID Circ @ TSH
55	69	OD Axial @ Sludge Pile TSH
57	69	OD Axial @ Sludge Pile TSH
74	72	OD Circ @ TSH
114	76	OD Circ @ TSH
57	81	OD Axial @ Sludge Pile TSH
65	81	OD Axial @ Sludge Pile TSH
86	82	ID Circ @ TSH
63	91	ID Axial below TSH
61	93	OD Circ @ TSH
85	93	ID Circ @ TSH
84	96	ID Circ @ TSH
59	99	OD Circ @ TSH
41	103	ID Axial below TSH
57	105	ID Circ @ TSH
75	105	OD Circ @ TSH
37	107	ID Axial below TSH
24	112	OD Circ @ TSH
25	115	OD Circ @ TSH
29	115	ID Axial below TSH

TABLE 8 (CONT.) – SONGS U2C12 Refueling Outage Tubes Sleeved STEAM GENERATOR E-089

Row	Column	Reason for Sleeving Tube (per Table 3)
93	115	ID Axial below TSH
26	118	OD Circ @ TSH
28	118	OD Circ @ TSH
85	119	ID Circ @ TSH
85	123	ID Circ @ TSH
13	139	ID Circ below TSH
11	141	ID Circ @ TSH

Appendix 1

Steam Generator Reference Information

Steam Generator
CE Model 3410 Tube Support Drawing

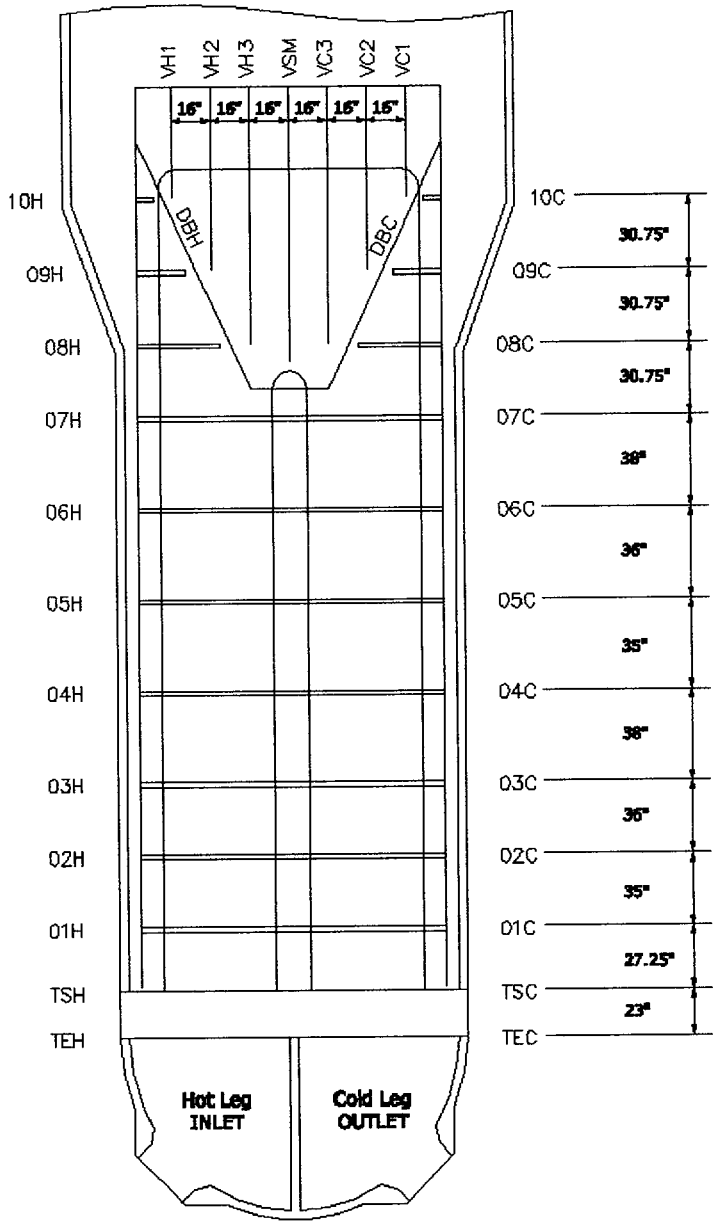

STEAM GENERATOR TUBE SUPPORT INTERSECTIONS ABOVE THE 7TH (FULL) EGGCRATE SUPPORT

SUPPORT INTERSECTIONS															
ROW	STRUCTURES														
122-147	08H	09H	10H	DBH	VH1	VH2	VH3	VSM	VC3	VC2	VC1	DBC	10C	09C	08C
120-121*	08H	09H	10H	DBH	VH1	VH2	VH3	VSM	VC3	VC2	VC1	DBC	10C	09C	08C
115-119	08H	09H		DBH	VH1	VH2	VH3	VSM	VC3	VC2	VC1	DBC		09C	08C
86-114	08H	09H		DBH		VH2	VH3	VSM	VC3	VC2		DBC		09C	08C
84-85*	08H	09H		DBH		VH2	VH3	VSM	VC3	VC2		DBC		09C	08C
83	08H			DBH		VH2	VH3	VSM	VC3	VC2		DBC			08C
51-82	08H			DBH			VH3	VSM	VC3			DBC			08C
49-50*	08H			DBH				VSM				DBC			08C
19-48				DBH				VSM				DBC			
1-18				DBH								DBC			

* Indicates those rows adjacent to scallop bars

SOUTHERN CALIFORNIA EDISON, SAN ONOFRE

CE MODEL 3410 STEAM GENERATOR

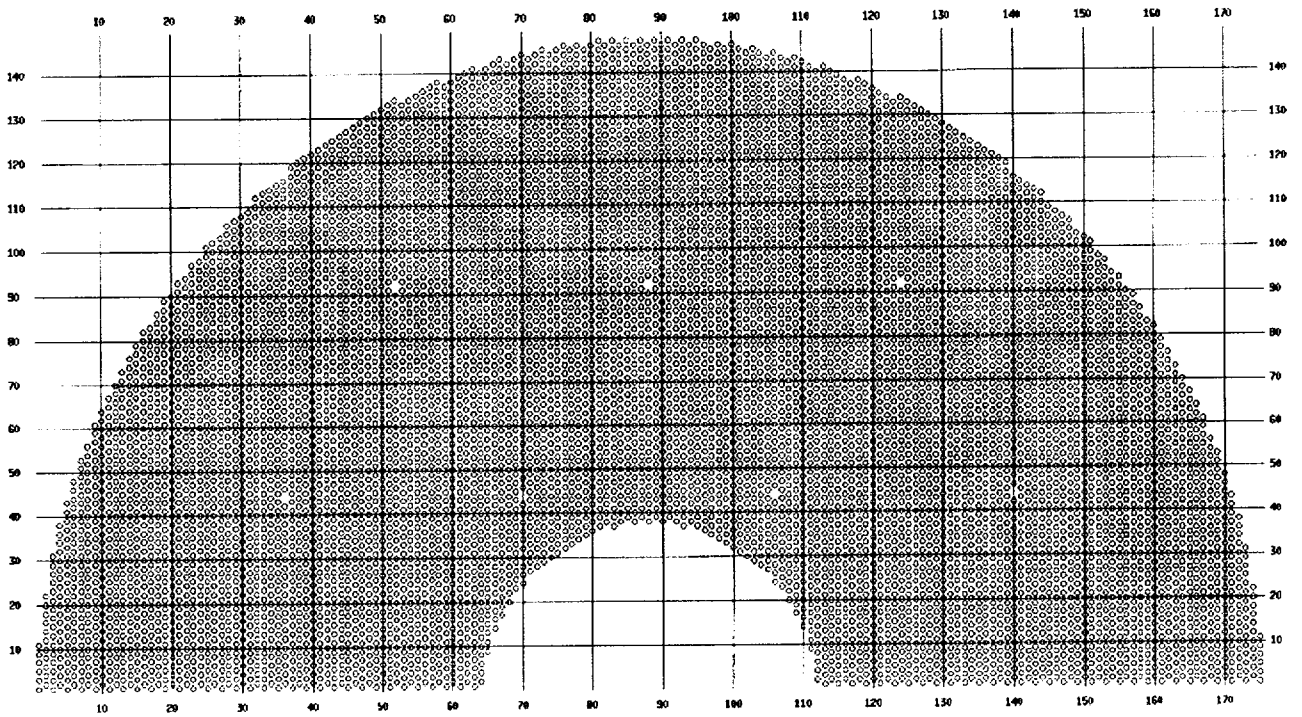

Appendix 2

Legend for Appendices 3 and 4

List of Abbreviations and Format Used to Describe Indications from Rotating Probe Testing

"I-Code" Abbreviations	Explanation of the Abbreviations
SCI	Single Circumferential Indication
MCI	Multiple Circumferential Indications
SAI	Single Axial Indication
MAI	Multiple Axial Indications
MMI	Mixed Mode Indications
SVI	Single Volumetric Indication (i.e. no special axial or circumferential aspect)
MVI	Multiple Volumetric Indications (i.e. no special axial or circumferential aspect)

Format

In Appendices 3 and 4, a single line of data is associated with each individual rotating probe indication. Below is a descriptive example of the format.

ROW	COL	VOLTS	DEG	CHN	IND	%TW	LOCATION	EXT	EXT	UTIL 1	UTIL 2
4	12	+P VOLTS	+P DEG	CH#	CODE	%	LOCATION	EXT	EXT	PAN VOLTS	+P LEN

1. All "I-Code" indications require a single line entry. The example above displays the form of a Resolution Report line. The VOLTS field contains the Plus-Point P-to-P voltage of the largest, most representative response. The DEG field contains the corresponding phase angle. The CHN field contains the reporting channel (i.e. the appropriate 300kHz Plus-Point channel). The IND field contains the appropriate 3-letter code (see list above). The %TW field indicates the percent wall loss for wear indications. The LOCATION field contains the abbreviation for the referenced landmark and the (FROM-TO) distance for the indication. The EXT fields contain the landmarks of the beginning and end of the test extent. The UTIL 1 field contains the 300kHz pancake P-to-P voltage of the largest, most representative response. The UTIL 2 field contains the measured Plus-Point length of the indications. Exceptions to this general guidance is provided in paragraphs 2 and 3 below.

2. For axial indications of extended length, the location should be ranged (FROM-TO) in the LOCATION field. If the range of such an indication includes any part of a support structure, it should be references from that landmark.

3. For "I-Code" indications which have both axial and circumferential extent (i.e. SVI, MVI, and MMI) the location should be ranged in the LOCATION field (as above) and the UTIL 2 field should contain the circumferential length.

Appendix 3

Inspection Summary

Steam Generator E-088

SG88 - MAI, MCI, MMI, MVI, SAI, SCI, SVI, 0-100%TWD

QUERY: QueryM1

ROW	LINE	VOLTS	DEG	CHN	IND	%TW	LOCATION			EXT	EXT	UTIL 1	UTIL 2	CAL #	LEG	PROBE
4	12	0.23	104	2	SAI		TSH	+3.51		TSH	TSH	0.21	0.12	47	HOT	600PP
4	162	3.04	26	4	SAI		TSH	-7.10		TSH	TSH	5.60	0.24	180	HOT	580PP
6	46	0.46	22	P 1	SCI		TSH	-4.32		TSH	TSH	0.84	0.20	33	HOT	600PP
8	36	0.45	21	P 1	SCI		TSH	-5.27		TSH	TSH	0.21	0.22	36	HOT	600PP
10	120	1.75	41	P 1	SCI		TSH	-7.86		TSH	TSH	3.94	0.22	182	HOT	580PP
		1.16	26	4	MVI		TSH	-9.17	TO-8.97	TSH	TSH	1.55	0.69	182	HOT	580PP
		0.46	51	P 1	MCI		TSH	-7.43	TO-6.62	TSH	TSH	3.13	0.46	182	HOT	580PP
10	126	0.22	35	P 2	TWD	11	05H	+0.76		TEC	TEH	LAR		13	HOT	600UL
12	62	0.34	21	P 1	SCI		TSH	-1.77		TSH	TSH	0.13	0.19	58	HOT	600PP
12	138	0.27	25	P 1	SCI		TSH	-0.02		TSH	TSH	0.22	0.35	46	HOT	600PP
13	9	0.61	81	P 2	TWD	24	05H	-0.10		TEH	TEC			46	COLD	600UL
13	61	0.39	115	2	SAI		06H	+0.49		06H	06H	1.34	0.27	115	HOT	580PP
15	13	0.29	98	2	SAI		06H	+0.30		06H	06H	0.18	0.53	123	HOT	580PP
15	135	0.42	19	P 1	SCI		TSH	-2.66		TSH	TSH	0.28	0.16	41	HOT	600PP
16	20	0.28	128	P 2	TWD	12	DBC	+1.25		TEH	TEC			49	COLD	600UL
16	44	0.27	22	P 1	SCI		TSH	-0.09		TSH	TSH	0.00	0.19	32	HOT	600PP
17	27	0.55	11	2	SAI		TSH	-2.82		TSH	TSH	0.51	0.19	39	HOT	600PP
17	35	0.44	17	P 1	SCI		TSH	-0.09		TSH	TSH	0.16	0.19	36	HOT	600PP
17	61	1.01	20	2	SAI		TSH	-1.11		TSH	TSH	0.65	0.18	53	HOT	600PP
18	36	0.72	22	P 1	SCI		TSH	-0.08		TSH	TSH	0.49	0.19	37	HOT	600PP
18	44	0.25	92	P 2	TWD	8	DBH	-1.75		TEH	TEC			1	COLD	600UL
18	58	0.69	43	2	SAI		07H	-0.11		07H	07H	0.56	0.11	188	HOT	520PP
18	118	0.49	7	2	SAI		06H	+0.26		06H	06H	0.00	0.26	138	HOT	580PP
18	124	0.15	91	2	SAI		01H	+8.39		01H	01H	0.00	0.39	135	HOT	580PP
18	126	0.38	24	P 1	SCI		TSH	-0.12		TSH	TSH	0.69	0.22	76	HOT	600PP
19	39	0.29	25	P 1	SCI		TSH	-0.11		TSH	TSH	0.17	0.21	37	HOT	600PP
21	49	1.07	16	2	SAI		07H	-0.52		07H	07H	0.00	0.20	107	HOT	580PP
21	159	0.28	93	2	SAI		06H	+0.87		06H	06H	0.71	0.18	111	HOT	580PP
		0.43	134	P 2	TWD	16	06H	+0.87		TEH	TEC			30	COLD	600UL
22	112	0.53	14	2	SAI		TSH	-0.58		TSH	TSH	0.47	0.18	68	HOT	600PP
22	116	0.65	13	2	SAI		06H	+0.02		06H	06H	0.00	0.18	138	HOT	580PP
22	166	0.09	124	2	SAI		06H	+4.48		06H	06H	0.00	0.32	105	HOT	580PP
		0.14	114	2	SAI		06H	+7.50		06H	06H	0.19	0.67	105	HOT	580PP
		0.07	74	2	SAI		06H	+10.97		06H	06H	0.00	0.45	105	HOT	580PP
		0.11	126	2	SAI		06H	+17.60		06H	06H	0.00	0.48	105	HOT	580PP
22	168	0.14	119	2	SAI		06H	+13.00		06H	06H	0.00	0.27	105	HOT	580PP
23	109	0.33	116	P 2	TWD	14	VSM	+0.76		TEC	TEH			19	HOT	600UL
23	113	0.61	18	2	SAI		TSH	-1.16		TSH	TSH	1.22	0.16	67	HOT	600PP
		0.64	14	2	SAI		TSH	-0.51		TSH	TSH	1.21	0.16	67	HOT	600PP
24	14	0.33	66	P 2	TWD	13	VSM	+0.88		TEH	TEC			49	COLD	600UL
24	48	0.47	21	P 1	SCI		TSH	-2.07		TSH	TSH	0.58	0.16	48	HOT	600PP

SG88 - MAI, MCI, MMI, MVI, SAI, SCI, SVI, 0-100%TWD

QUERY: QueryM1

ROW	LINE	VOLTS	DEG	CHN	IND	%TW	LOCATION		EXT	EXT	UTIL 1	UTIL 2	CAL #	LEG	PROBE
24	170	0.19	117	2	SAI		02H	+0.33	02H	02H	0.59	0.24	106	HOT	580PP
		0.20	104	2	SAI		06H	-0.33	06H	06H	0.00	0.13	106	HOT	580PP
		0.20	133	2	SAI		06H	-0.12	06H	06H	0.00	0.16	106	HOT	580PP
		0.24	141	2	SAI		06H	+0.12	06H	06H	0.00	0.16	106	HOT	580PP
25	49	0.42	14	P 1	SCI		TSH	-0.05	TSH	TSH	0.27	0.14	47	HOT	600PP
25	119	0.56	23	P 1	MCI		TSH	-0.21	TSH	TSH	0.32	0.24	71	HOT	580PP
27	115	0.31	125	2	SAI		05H	+0.01	05H	05H	0.00	0.35	143	HOT	580PP
		0.17	94	2	SAI		05H	-0.48	05H	05H	0.00	0.22	143	HOT	580PP
27	121	0.23	16	P 1	SCI		TSH	-0.04	TSH	TSH	0.31	0.18	174	HOT	580PP
27	173	0.40	134	P 2	TWD	18	04H	+0.86	TEH	TEC			36	COLD	600UL
28	112	0.43	98	P 2	TWD	15	07H	+0.80	TEC	TEH			20	HOT	600UL
		0.25	101	2	SAI		07H	+0.81	07H	07H	0.00	0.14	142	HOT	580PP
28	114	0.44	17	2	SAI		TSH	-3.43	TSH	TSH	0.54	0.25	71	HOT	580PP
29	115	0.26	134	2	SAI		05H	-0.07	05H	05H	0.00	0.57	142	HOT	580PP
30	68	0.63	15	2	SAI		TSH	-0.09	TSH	TSH	0.73	0.25	58	HOT	600PP
30	70	0.62	18	2	SAI		TSH	-0.03	TSH	TSH	0.33	0.17	58	HOT	600PP
31	11	0.47	115	P 2	TWD	20	DBH	+1.35	TEH	TEC			46	COLD	600UL
31	109	0.85	18	2	SAI		06H	-0.53	06H	06H	0.00	0.24	142	HOT	580PP
32	60	0.34	49	P 2	TWD	13	VSM	-0.86	TEC	TEH			15	HOT	600UL
32	164	0.22	95	2	SAI		06H	+0.37	06H	06H	0.64	0.33	111	HOT	580PP
33	69	0.30	111	2	SAI		07H	-0.12	07H	07H	0.00	0.19	188	HOT	520PP
33	71	0.46	92	P 2	TWD	16	DBC	-1.68	TSC	TEH			31	HOT	600UL
34	72	0.59	23	P 2	TWD	20	DBC	+2.02	TEC	TEH			30	HOT	600UL
34	116	0.24	75	P 2	TWD	11	VSM	-0.87	TEC	TEH			19	HOT	600UL
34	122	0.86	18	2	SAI		TSH	-4.50	TSH	TSH	0.79	0.18	71	HOT	580PP
35	25	0.61	132	P 2	TWD	21	VSM	-0.73	TEH	TEC			50	COLD	600UL
35	59	0.64	83	P 2	TWD	22	VSM	+0.63	TEC	TEH			15	HOT	600UL
36	58	0.53	155	P 2	TWD	19	VSM	+0.80	TEC	TEH			15	HOT	600UL
36	68	0.45	18	P 1	SCI		TSH	-1.26	TSH	TSH	0.00	0.21	58	HOT	600PP
36	102	0.96	82	P 2	TWD	29	DBC	+1.92	TSC	TEH			34	HOT	600UL
36	104	0.94	106	P 2	TWD	27	DBH	-1.69	STH	TEC			42	COLD	600UL
36	106	0.31	16	2	SAI		TSH	-1.11	TSH	TSH	0.95	0.16	67	HOT	600PP
36	108	0.96	22	2	SAI		TSH	-3.98	TSH	TSH	1.30	0.16	67	HOT	600PP
36	110	0.34	148	P 2	TWD	15	VSM	+0.66	TEC	TEH			19	HOT	600UL
37	13	0.19	92	2	SAI		06H	+2.03	06H	06H	0.22	0.17	123	HOT	580PP
37	47	0.43	134	P 2	TWD	15	VSM	+0.91	TEC	TEH			12	HOT	600UL
37	61	0.66	121	P 2	TWD	22	VSM	+0.63	TEC	TEH			15	HOT	600UL
37	69	0.99	16	2	MAI		TSH	-1.28	TSH	TSH	0.66	0.17	57	HOT	600PP
37	119	1.90	23	4	SAI		TEH	+9.99	TEH	TEH	3.39	0.46	175	HOT	580PP
38	74	0.67	21	P 2	TWD	22	DBC	+1.87	TEC	TEH			30	HOT	600UL

SG88 - MAI, MCI, MMI, MVI, SAI, SCI, SVI, 0-100%TWD

QUERY: QueryM1

ROW	LINE	VOLTS	DEG	CHN	IND	%TW	LOCATION			EXT	EXT	UTIL 1	UTIL 2	CAL #	LEG	PROBE
38	102	0.34	109	P 2	TWD	13	DBC	+1.59		TSC	TEH			34	HOT	600UL
		0.81	123	P 2	TWD	26	DBC	+1.93		TSC	TEH			34	HOT	600UL
39	13	0.33	132	P 2	TWD	15	VSM	+0.19		TEH	TEC			46	COLD	600UL
39	101	0.99	126	P 2	TWD	30	DBC	+1.97		TEC	TEH			34	HOT	600UL
39	103	0.43	80	P 2	TWD	14	DBC	+1.80		STH	TEC			42	COLD	600UL
39	121	0.23	23	P 1	SCI		TSH	-0.14		TSH	TSH	0.51	0.19	72	HOT	600PP
39	127	0.36	61	P 2	TWD	17	VSM	-0.88		TEC	TEH			13	HOT	600UL
40	122	0.49	65	P 2	TWD	17	VSM	-0.85		TEC	TEH			14	HOT	600UL
41	73	0.31	92	P 2	TWD	11	VSM	+0.89		TEC	TEH			31	HOT	600UL
41	101	0.35	130	P 2	TWD	13	VSM	-0.81		TEC	TEH			35	HOT	600UL
41	103	0.22	15	2	SAI		TSH	-0.44		TSH	TSH	0.56	0.17	59	HOT	600PP
41	113	0.40	71	P 2	TWD	17	VSM	-0.91		TEC	TEH			26	HOT	600UL
42	74	0.42	107	P 2	TWD	15	DBC	+1.86		TEC	TEH			31	HOT	600UL
42	106	0.48	107	P 2	TWD	18	VSM	-0.83		TSC	TEH			34	HOT	600UL
43	19	0.60	128	P 2	TWD	21	02H	+0.85		TEH	TEC			48	COLD	600UL
43	51	0.95	122	P 2	TWD	27	VSM	+0.82		TEC	TEH			12	HOT	600UL
43	75	0.62	126	P 2	TWD	20	DBC	+1.99		TEC	TEH			31	HOT	600UL
		0.81	114	P 2	TWD	24	VSM	+0.86		TEC	TEH			31	HOT	600UL
43	101	0.30	108	P 2	TWD	11	DBC	-1.63		TEC	TEH			34	HOT	600UL
43	125	0.37	112	P 2	TWD	17	VSM	-0.83		TEC	TEH			13	HOT	600UL
44	58	0.48	118	P 2	TWD	18	VSM	+0.84		TEC	TEH			15	HOT	600UL
44	76	0.49	13	2	SAI		TSH	-0.90		TSH	TSH	0.62	0.32	69	HOT	600PP
		0.35	14	2	SAI		TSH	-1.81		TSH	TSH	0.23	0.12	69	HOT	600PP
		0.35	10	2	SAI		TSH	-2.06		TSH	TSH	0.56	0.29	69	HOT	600PP
44	98	0.51	109	P 2	TWD	16	01H	-0.30		TEC	TEH			35	HOT	600UL
44	100	0.33	119	P 2	TWD	13	DBC	-1.51		TEC	TEH			34	HOT	600UL
		1.40	169	P 2	TWD	36	DBC	+1.82		TEC	TEH			34	HOT	600UL
44	124	0.33	47	P 2	TWD	12	VSM	-0.97		TEC	TEH			14	HOT	600UL
45	55	0.37	125	P 1	SCI		TSH	+0.07		TSH	TSH	0.00	0.57	54	HOT	600PP
45	73	0.41	130	P 2	TWD	13	DBC	-1.61		STH	TEC			40	COLD	600UL
45	75	0.85	112	P 2	TWD	25	DBC	+1.95		TEC	TEH			30	HOT	600UL
		0.87	106	P 2	TWD	26	DBH	-1.76		TEC	TEH			30	HOT	600UL
46	72	0.39	25	2	SAI		TSH	-1.37		TSH	TSH	0.71	0.16	67	HOT	600PP
46	74	0.62	87	P 2	TWD	19	DBC	+1.78		TEC	TEH			31	HOT	600UL
		1.23	97	P 2	TWD	30	VSM	-0.87		TEC	TEH			31	HOT	600UL
		0.32	133	P 2	TWD	11	VSM	+0.83		TEC	TEH			31	HOT	600UL
46	76	0.70	18	P 2	TWD	22	DBH	+2.01		TEC	TEH			30	HOT	600UL
46	78	1.11	129	P 2	TWD	30	DBC	+2.25		TEC	TEH			30	HOT	600UL
46	98	0.94	76	P 2	TWD	29	DBH	-1.92		TEC	TEH			34	HOT	600UL
46	116	0.43	20	P 1	SCI		TSH	-0.03		TSH	TSH	0.34	0.16	72	HOT	600PP
		0.71	38	P 2	TWD	23	VSM	-0.80		TEC	TEH			20	HOT	600UL
47	99	0.50	62	P 2	TWD	18	DBC	-1.91		TEC	TEH			34	HOT	600UL
		1.44	109	P 2	TWD	37	DBH	-2.25		TEC	TEH			34	HOT	600UL

SG88 - MAI, MCI, MMI, MVI, SAI, SCI, SVI, 0-100%TWD

QUERY: QueryM1

ROW	LINE	VOLTS	DEG	CHN	IND	%TW	LOCATION		EXT	EXT	UTIL 1	UTIL 2	CAL #	LEG	PROBE
		0.32	98	P 2	TWD	14	DBC	+2.15	TEC	TEH.			34	HOT	600UL
47	109	0.21	134	P 2	TWD	9	VSM	+0.98	STH	TEC			42	COLD	600UL
47	123	0.27	21	P 1	MCI		TSH	-0.08	TSH	TSH	0.20	0.20	76	HOT	600PP
47	143	0.37	138	P 2	TWD	15	VSM	-0.81	TEH	TEC			23	COLD	600UL
48	58	0.39	17	P 1	SCI		TSH	-3.20	TSH	TSH	0.40	0.16	53	HOT	600PP
48	68	0.38	118	P 2	TWD	14	VSM	+0.78	TEC	TEH			17	HOT	600UL
48	108	0.52	92	P 2	TWD	17	VSM	-0.20	TEC	TEH			10	HOT	600UL
		0.48	74	P 2	TWD	16	VSM	-0.77	TEC	TEH			10	HOT	600UL
49	31	0.43.	92	P 2	TWD	16	08C	-1.14	TEH	TEC			50	COLD	600UL
49	65	0.21	91	2	SAI		TSH	+0.18	TSH	TSH	0.00	0.18	57	HOT	600PP
		0.25	107	2	SAI		TSH	+0.40	TSH	TSH	0.00	0.25	57	HOT	600PP
49	71	0.30	11	2	SAI		TSH	-0.63	TSH	TSH	0.20	0.12	68	HOT	600PP
		0.33	14	2	SAI		TSH	-0.46	TSH	TSH	0.10	0.14	68	HOT	600PP
		0.51	82	P 2	TWD	18	VSM	-0.82	TEC	TEH			30	HOT	600UL
49	75	0.30	108	P 2	TWD	11	DBH	-1.96	TEC	TEH			30	HOT	600UL
49	109	0.80	19	2	SAI		TSH	-2.59	TSH	TSH	1.00	0.16	67	HOT	600PP
50	8	0.36	143	P 2	TWD	16	VSM	+0.78	TEH	TEC			46	COLD	600UL
50	66	0.70	130	P 2	TWD	24	08C	+1.08	STH	TEC			41	COLD	600UL
50	76	0.72	90	P 2	TWD	23	DBC	-1.81	TEC	TEH			30	HOT	600UL
50	98	0.32	42	P 2	TWD	12	VSM	-0.89	TEC	TEH			34	HOT	600UL
50	110	0.47	73	P 2	TWD	20	08H	+1.23	TEC	TEH	LAR		26	HOT	600UL
51	77	0.49	87	P 2	TWD	16	DBC	-2.00	TEC	TEH			31	HOT	600UL
51	79	1.14	120	P 2	TWD	31	DBC	-1.76	TEC	TEH			30	HOT	600UL
		0.70	44	P 2	TWD	22	DBC	+1.88	TEC	TEH			30	HOT	600UL
		0.30	40	P 2	TWD	11	DBH	+1.41	TEC	TEH			30	HOT	600UL
51	99	0.69	90	P 2	TWD	24	DBH	-2.05	TEC	TEH			34	HOT	600UL
51	105	0.41	14	2	SAI		TSH	-1.33	TSH	TSH	0.00	0.20	59	HOT	600PP
		0.39	22	2	SAI		TSH	-1.17	TSH	TSH	0.53	0.17	59	HOT	600PP
		0.32	9	2	SAI		TSH	-0.96	TSH	TSH	0.18	0.15	59	HOT	600PP
51	111	0.62	11	2	SAI		TSH	-4.45	TSH	TSH	0.83	0.19	67	HOT	600PP
51	163	0.52	63	P 2	TWD	19	VH3	+0.89	TEH	TEC			35	COLD	600UL
52	68	0.53	125	P 2	TWD	19	VSM	+0.04	TEC	TEH			17	HOT	600UL
52	90	1.05	69	P 2	TWD	27	DBH	-1.91	STH	TEC			38	COLD	600UL
52	94	0.49	124	P 2	TWD	18	DBC	-1.77	TEC	TEH			34	HOT	600UL
52	96	0.49	65	P 2	TWD	18	DBH	-2.14	TEC	TEH			34	HOT	600UL
52	104	0.58	16	2	SAI		TSH	-1.08	TSH	TSH	0.48	0.13	59	HOT	600PP
53	81	1.15	101	P 2	TWD	31	DBH	-1.61	TEC	TEH			30	HOT	600UL
54	8	0.57	120	P 2	TWD	23	01H	+0.08	TEH	TEC	LAR		46	COLD	600UL
		0.15	24	P 2	TWD	8	01H	-1.01	TEH	TEC	LAR		46	COLD	600UL
54	64	0.70	16	2	SAI		TSH	-1.63	TSH	TSH	0.49	0.15	58	HOT	600PP
		0.79	17	2	SAI		TSH	-3.48	TSH	TSH	0.62	0.15	58	HOT	600PP
54	74	0.56	16	2	SAI		TSH	-1.55	TSH	TSH	0.80	0.15	70	HOT	580PP
		0.49	13	2	SAI		TSH	-1.32	TSH	TSH	0.82	0.20	70	HOT	580PP

SG88 - MAI, MCI, MMI, MVI, SAI, SCI, SVI, 0-100%TWD

QUERY: QueryM1

ROW	LINE	VOLTS	DEG	CHN	IND	%TW	LOCATION		EXT	EXT	UTIL 1	UTIL 2	CAL #	LEG	PROBE
54	76	0.46	137	P 2	TWD	16	DBC	-1.71	TEC	TEH			30	HOT	600UL
54	90	1.59	79	P 2	TWD	35	DBH	-2.10	STH	TEC			38	COLD	600UL
		0.84	132	P 2	TWD	23	DBH	+1.75	STH	TEC			38	COLD	600UL
		0.18	8	P 2	TWD	6	DBC	+1.74	STH	TEC			38	COLD	600UL
54	96	0.64	78	P 2	TWD	19	DBH	-1.61	STH	TEC			38	COLD	600UL
54	108	0.14	132	2	SAI		02H	+7.35	02H	02H	0.00	0.22	150	HOT	580PP
55	83	0.67	119	P 2	TWD	19	DBH	-1.89	STH	TEC			40	COLD	600UL
		0.20	162	P 2	TWD	7	DBH	+1.85	01H	TEC			40	COLD	600UL
55	85	0.33	14	2	SAI		TSH	-1.10	TSH	TSH	0.30	0.21	74	HOT	580PP
55	89	0.85	95	P 2	TWD	24	DBC	-1.54	STH	TEC			38	COLD	600UL
		0.56	170	P 2	TWD	17	DBC	+1.47	STH	TEC			38	COLD	600UL
55	91	0.39	93	P 2	TWD	15	DBH	-1.99	TEC	TEH			34	HOT	600UL
55	117	0.24	93	P 1	SCI		TSH	-0.08	TSH	TSH	0.65	0.31	71	HOT	580PP
56	80	0.47	50	P 2	TWD	16	DBC	-1.95	TEC	TEH			31	HOT	600UL
56	86	1.41	91	P 2	TWD	36	DBH	-2.00	TEC	TEH			34	HOT	600UL
56	88	0.70	25	2	SAI		TSH	-1.40	TSH	TSH	0.44	0.16	64	HOT	600PP
		0.71	85	P 2	TWD	22	DBC	-1.71	TEC	TEH			35	HOT	600UL
56	90	0.72	28	P 2	TWD	24	DBH	+1.27	TEC	TEH			34	HOT	600UL
		1.01	52	P 2	TWD	30	DBH	-2.15	TEC	TEH			34	HOT	600UL
56	92	0.38	23	2	SAI		TSH	-0.60	TSH	TSH	0.93	0.16	63	HOT	600PP
57	25	0.63	56	P 2	TWD	21	VH3	-0.79	TEH	TEC			51	COLD	600UL
57	69	0.33	118	P 2	TWD	11	VH3	+0.82	TEC	TEH			17	HOT	600UL
57	81	0.43	124	P 2	TWD	15	DBH	-1.49	TEC	TEH			30	HOT	600UL
57	111	0.76	20	2	SAI		TSH	-4.12	TSH	TSH	0.81	0.16	67	HOT	600PP
57	167	0.59	150	P 2	TWD	22	02C	+0.84	TEH	TEC			34	COLD	600UL
58	70	0.40	97	P 2	TWD	14	VSM	-0.82	TEC	TEH			17	HOT	600UL
58	88	0.29	10	2	SAI		TSH	-0.98	TSH	TSH	0.27	0.14	63	HOT	600PP
		0.32	89	P 2	TWD	12	DBC	-1.73	TEC	TEH			34	HOT	600UL
58	134	0.33	31	P 1	SCI		TSH	-0.05	TSH	TSH	0.23	0.20	42	HOT	600PP
59	87	0.50	68	P 2	TWD	17	DBH	-1.99	TEC	TEH			35	HOT	600UL
59	111	0.32	91	P 2	TWD	12	01H	+1.19	STH	TEC			42	COLD	600UL
59	143	0.41	37	P 2	TWD	17	VH3	-0.57	TEH	TEC			23	COLD	600UL
61	31	0.29	84	P 2	TWD	11	VH3	+1.03	TEH	TEC			50	COLD	600UL
61	103	0.32	23	P 1	SCI		TSH	-0.17	TSH	TSH	0.86	0.21	59	HOT	600PP
61	125	0.35	130	P 2	TWD	12	VC3	-1.08	TEC	TEH			14	HOT	600UL
62	62	0.42	19	P 1	MCI		TSH	-0.09	TSH	TSH	0.10	0.17	57	HOT	600PP
62	70	0.40	133	P 2	TWD	14	VSM	+0.00	TEC	TEH			17	HOT	600UL
62	72	0.22	13	P 1	SCI		TSH	-0.11	TSH	TSH	0.26	0.16	69	HOT	600PP
64	80	0.57	157	P 2	TWD	18	DBH	+1.62	TEC	TEH			31	HOT	600UL
		0.39	152	P 2	TWD	13	VSM	-0.76	TEC	TEH			31	HOT	600UL
64	98	0.15	105	2	SAI		TSH	+0.11	TSH	TSH	0.00	0.13	59	HOT	600PP
65	69	0.56	16	P 1	SCI		TSH	-0.14	TSH	TSH	0.00	0.25	58	HOT	600PP

SG88 - MAI, MCI, MMI, MVI, SAI, SCI, SVI, 0-100%TWD

QUERY: QueryM1

ROW	LINE	VOLTS	DEG	CHN	IND	%TW	LOCATION		EXT	EXT	UTIL 1	UTIL 2	CAL #	LEG	PROBE
65	97	0.42	95	P 2	TWD	14	02H	-1.13	TEC	TEH			35	HOT	600UL
65	113	0.42	30	P 1	SCI		TSH	-0.11	TSH	TSH	0.57	0.22	67	HOT	600PP
65	119	0.41	22	P 1	SCI		TSH	-0.08	TSH	TSH	0.45	0.19	72	HOT	600PP
65	121	0.19	24	P 1	SCI		TSH	-0.14	TSH	TSH	0.12	0.16	72	HOT	600PP
66	48	0.57	123	P 2	TWD	19	VSM	-0.82	TEC	TEH			12	HOT	600UL
67	83	0.18	95	4	MAI		TSH	+0.59	TSH	TSH	0.00	0.17	170	HOT	580PP
67	85	0.79	52	P 2	TWD	23	DBC	-1.91	TEC	TEH			35	HOT	600UL
67	109	0.18	118	P 1	SCI		TSH	+0.03	TSH	TSH	0.00	0.20	68	HOT	600PP
67	121	0.17	90	P 2	TWD	8	VSM	+0.81	TEC	TEH			19	HOT	600UL
67	129	0.23	148	P 2	TWD	11	VH3	+0.00	TEC	TEH			9	HOT	600UL
67	159	0.47	118	P 2	TWD	17	VC3	-0.31	TEH	TEC			29	COLD	600UL
		0.32	122	P 2	TWD	12	VH3	+0.81	TEH	TEC			29	COLD	600UL
67	165	0.79	120	P 2	TWD	27	VH3	-0.83	TEH	TEC			34	COLD	600UL
68	70	0.42	20	P 1	SCI		TSH	-0.08	TSH	TSH	0.09	0.19	58	HOT	600PP
68	74	0.18	22	P 1	SCI		TSH	-0.07	TSH	TSH	0.18	0.19	69	HOT	600PP
68	90	0.24	98	2	SAI		TSH	+0.55	TSH	TSH	0.17	0.19	64	HOT	600PP
68	102	0.87	27	P 1	MCI		TSH	-0.18	TSH	TSH	0.87	0.21	59	HOT	600PP
68	146	0.50	110	P 2	TWD	21	VC3	-0.86	TEH	TEC			25	COLD	600UL
69	163	0.36	94	P 2	TWD	14	VSM	+0.83	TEH	TEC			34	COLD	600UL
70	70	0.50	86	P 2	TWD	18	VC3	-0.86	TEC	TEH			17	HOT	600UL
71	63	0.52	115	P 2	TWD	18	VH3	-0.88	TEC	TEH			17	HOT	600UL
71	85	0.87	52	P 2	TWD	24	DBC	-1.91	TEC	TEH			35	HOT	600UL
71	89	0.19	132	2	SAI		TSH	+0.85	TSH	TSH	0.24	0.16	63	HOT	600PP
71	97	0.28	76	P 2	TWD	10	01H	+0.88	TEC	TEH			35	HOT	600UL
72	70	0.36	91	P 2	TWD	13	VC3	-1.10	TEC	TEH			18	HOT	600UL
72	88	0.54	105	P 2	TWD	20	DBC	-1.82	TEC	TEH			34	HOT	600UL
72	90	0.60	141	P 2	TWD	19	VSM	+0.86	TEC	TEH			35	HOT	600UL
72	98	0.45	102	P 2	TWD	17	02H	-1.24	TEC	TEH			34	HOT	600UL
72	106	0.46	27	P 1	SCI		TSH	-0.12	TSH	TSH	0.19	0.17	60	HOT	600PP
		0.51	83	P 2	TWD	16	VH3	-0.80	TEC	TEH			35	HOT	600UL
72	118	0.23	68	P 2	TWD	8	VH3	-0.83	TEC	TEH			9	HOT	600UL
73	73	0.82	119	P 2	TWD	24	VSM	+0.93	TEC	TEH			31	HOT	600UL
73	133	0.51	131	P 2	TWD	20	VH3	+0.87	TEH	TEC			22	COLD	600UL
74	82	0.46	127	P 2	TWD	16	VSM	-0.94	TEC	TEH			31	HOT	600UL
		0.95	140	P 2	TWD	26	VSM	+0.82	TEC	TEH			31	HOT	600UL
74	100	0.21	79	P 1	MCI		TSH	-0.02	TSH	TSH	0.00	0.45	59	HOT	600PP
74	146	0.75	141	P 2	TWD	23	VH3	-0.83	TEH	TEC			26	COLD	600UL
		0.72	59	P 2	TWD	23	VC3	-0.95	TEH	TEC			26	COLD	600UL
		1.02	143	P 2	TWD	28	VC3	+0.85	TEH	TEC			26	COLD	600UL
74	148	0.26	82	P 2	TWD	11	VH3	-0.86	TEH	TEC			26	COLD	600UL

SG88 - MAI, MCI, MMI, MVI, SAI, SCI, SVI, 0-100%TWD

QUERY: QueryM1

ROW	LINE	VOLTS	DEG	CHN	IND	%TW	LOCATION		EXT	EXT	UTIL 1	UTIL 2	CAL #	LEG	PROBE
75	139	0.23	86	P 2	TWD	9	VH3	-0.92	TEH	TEC			23	COLD	600UL
		0.34	156	P 2	TWD	14	VH3	+0.80	TEH	TEC			23	COLD	600UL
		0.89	97	P 2	TWD	28	VSM	+0.04	TEH	TEC			23	COLD	600UL
76	84	0.23	34	P 2	TWD	9	VH3	-0.83	TEC	TEH			30	HOT	600UL
		0.20	70	P 2	TWD	8	VH3	+0.72	TEC	TEH			30	HOT	600UL
76	88	0.54	63	P 2	TWD	17	03H	-1.14	TEC	TEH			35	HOT	600UL
76	90	0.41	45	P 2	TWD	16	VSM	+0.08	TEC	TEH			34	HOT	600UL
76	100	0.46	142	P 2	TWD	16	VC3	-0.85	TEC	TEH			35	HOT	600UL
76	134	0.44	127	P 2	TWD	16	VH3	+0.73	TEH	TEC			21	COLD	600UL
77	31	0.22	122	P 2	TWD	9	VSM	+0.33	TEH	TEC			50	COLD	600UL
77	33	0.55	79	P 2	TWD	18	VSM	+0.86	TEH	TEC			52	COLD	600UL
77	93	0.29	110	P 1	SCI		TSH	-0.03	TSH	TSH	0.25	0.25	63	HOT	600PP
77	97	0.21	130	P 1	SCI		TSH	-0.04	TSH	TSH	0.44	0.38	63	HOT	600PP
78	22	0.69	105	P 2	TWD	23	VC3	-0.88	TEH	TEC			48	COLD	600UL
78	26	0.37	95	2	SAI		06H	+0.58	06H	06H	0.65	0.29	123	HOT	580PP
78	120	0.28	34	P 2	TWD	12	VC3	+0.67	TEC	TEH			9	HOT	600UL
78	136	0.56	66	P 2	TWD	21	DBH	-1.99	TEH	TEC			22	COLD	600UL
78	138	0.23	166	P 2	TWD	9	DBC	+1.53	TEH	TEC			24	COLD	600UL
78	142	0.48	133	P 2	TWD	18	VH3	+0.84	TEH	TEC			24	COLD	600UL
78	148	0.59	143	P 2	TWD	20	08C	-0.86	TEH	TEC			26	COLD	600UL
78	154	0.49	134	P 2	TWD	18	VC3	+0.88	TEH	TEC			28	COLD	600UL
79	73	0.40	97	P 2	TWD	14	VSM	+0.79	TEC	TEH			31	HOT	600UL
79	103	0.37	28	P 1	SCI		TSH	+0.00	TSH	TSH	0.58	0.30	60	HOT	600PP
79	143	0.20	134	P 2	TWD	9	DBC	-1.26	TEH	TEC			23	COLD	600UL
80	24	0.37	97	2	SAI		06H	+0.22	06H	06H	0.31	0.17	123	HOT	580PP
80	80	0.45	133	P 2	TWD	15	VSM	-0.82	TEC	TEH			31	HOT	600UL
80	112	0.25	87	P 2	TWD	10	VSM	-0.91	TEC	TEH			9	HOT	600UL
81	23	0.47	57	P 2	TWD	18	DBC	+1.60	TEH	TEC			49	COLD	600UL
81	39	0.23	101	P 2	TWD	9	VSM	+0.92	TEH	TEC			3	COLD	600UL
81	97	0.30	21	P 1	SCI		TSH	-0.10	TSH	TSH	0.43	0.27	63	HOT	600PP
81	151	0.37	137	P 2	TWD	14	VH3	+0.62	TEH	TEC			28	COLD	600UL
82	54	0.86	118	P 2	TWD	26	VH3	-0.84	TEC	TEH			11	HOT	600UL
82	72	0.26	20	P 1	SCI		TSH	-0.15	TSH	TSH	0.39	0.19	69	HOT	600PP
82	88	0.29	20	P 1	MCI		TSH	-0.11	TSH	TSH	0.33	0.19	73	HOT	600PP
83	111	0.42	29	P 1	SCI		TSH	-0.12	TSH	TSH	0.19	0.25	67	HOT	600PP
83	129	0.27	71	P 2	TWD	12	VC2	+0.55	TEC	TEH			9	HOT	600UL
84	24	0.33	133	2	SAI		06H	-0.29	06H	06H	0.65	0.24	123	HOT	580PP
84	104	0.40	29	P 2	TWD	15	09H	-1.11	TEC	TEH			34	HOT	600UL
84	114	0.31	117	P 2	TWD	14	09C	+0.00	TEC	TEH			9	HOT	600UL

SG88 - MAI, MCI, MMI, MVI, SAI, SCI, SVI, 0-100%TWD

QUERY: QueryM1

ROW	LINE	VOLTS	DEG	CHN	IND	%TW	LOCATION		EXT	EXT	UTIL 1	UTIL 2	CAL #	LEG	PROBE
85	27	0.26	125	2	SAI	07H		+0.48	07H	07H	0.12	0.24	123	HOT	580PP
85	67	0.45	96	P 2	TWD	16	VH2	-0.74	TEC	TEH			17	HOT	600UL
85	91	0.47	123	P 2	TWD	18	09H	-1.15	TEC	TEH			34	HOT	600UL
85	119	0.39	73	P 2	TWD	16	09H	+1.50	TEC	TEH	LOCOK		9	HOT	600UL
85	141	0.47	96	P 2	TWD	18	09H	+1.44	TEH	TEC	LOCOK		23	COLD	600UL
86	86	0.19	115	P 1	SCI		TSH	+0.05	TSH	TSH	0.00	0.33	170	HOT	580PP
86	130	0.35	128	P 2	TWD	13	VC2	+0.80	TEH	TEC			21	COLD	600UL
87	37	0.42	126	P 2	TWD	15	VH2	-0.78	TEH	TEC			5	COLD	600UL
		0.34	126	P 2	TWD	13	VH2	+0.76	TEH	TEC			5	COLD	600UL
87	125	0.30	113	P 2	TWD	13	VH2	-0.83	TEC	TEH			9	HOT	600UL
87	127	0.37	55	P 2	TWD	14	VH2	-0.81	TEC	TEH			9	HOT	600UL
87	129	0.32	129	P 2	TWD	14	VH2	-0.79	TEC	TEH			9	HOT	600UL
87	133	0.33	106	2	SAI		06H	-0.02	06H	06H	0.99	0.59	117	HOT	580PP
88	30	0.25	115	2	SAI		07H	+0.72	07H	07H	0.23	0.35	123	HOT	580PP
		0.24	101	2	SAI		07H	-0.20	07H	07H	0.33	0.31	123	HOT	580PP
88	52	0.46	53	P 2	TWD	16	VH2	+0.86	TEC	TEH			11	HOT	600UL
89	33	0.29	151	P 2	TWD	11	VH2	-0.86	TEH	TEC			52	COLD	600UL
89	37	0.44	121	P 2	TWD	16	VH2	-0.76	TEH	TEC			5	COLD	600UL
		0.27	73	P 2	TWD	10	VH2	+0.78	TEH	TEC			5	COLD	600UL
89	51	0.37	110	P 2	TWD	14	VH3	+0.82	TEC	TEH			11	HOT	600UL
89	61	0.40	142	P 2	TWD	15	VH3	+0.84	TEC	TEH			15	HOT	600UL
		0.39	83	P 2	TWD	15	VH3	-0.84	TEC	TEH			15	HOT	600UL
89	123	0.47	120	P 2	TWD	16	VH2	-0.95	TEC	TEH			10	HOT	600UL
89	125	0.37	28	P 2	TWD	14	VH2	-0.99	TEC	TEH			9	HOT	600UL
89	127	0.58	127	P 2	TWD	19	VH2	-0.93	TEC	TEH			10	HOT	600UL
89	141	0.41	60	P 2	TWD	17	VH2	+0.77	TEH	TEC			23	COLD	600UL
		0.28	96	P 2	TWD	11	VC2	+0.75	TEH	TEC			23	COLD	600UL
89	143	0.38	142	P 2	TWD	15	VH2	-0.81	TEH	TEC			23	COLD	600UL
90	40	0.18	83	2	SAI		07H	-0.53	07H	07H	0.15	0.23	127	HOT	580PP
90	58	0.46	24	P 1	SCI		TSH	-0.15	TSH	TSH	0.68	0.19	65	HOT	600PP
90	78	0.57	109	P 2	TWD	20	03H	-1.03	TEH	TEC			7	COLD	600UL
90	148	0.41	33	P 2	TWD	16	VH2	+0.90	TEH	TEC			19	COLD	600UL
92	26	0.66	70	P 2	TWD	23	VH2	-0.81	TEH	TEC			55	COLD	600UL
92	36	0.68	43	P 2	TWD	24	VH2	-0.81	TEH	TEC			55	COLD	600UL
		0.29	68	P 2	TWD	12	VSM	+0.85	TEH	TEC			55	COLD	600UL
93	153	0.50	59	P 2	TWD	18	05C	-0.88	TEH	TEC			19	COLD	600UL
		0.43	78	P 2	TWD	17	03C	+0.91	TEH	TEC			19	COLD	600UL
94	32	0.44	101	P 2	TWD	17	VH2	-0.84	TEH	TEC			54	COLD	600UL
94	84	0.31	158	P 2	TWD	12	VH3	+0.84	TEH	TEC			8	COLD	600UL
94	116	0.35	70	P 2	TWD	15	01H	+0.81	TEC	TEH			1	HOT	600UL
94	138	0.30	79	P 2	TWD	12	VSM	+0.19	TEH	TEC			19	COLD	600UL

SG88 - MAI, MCI, MMI, MVI, SAI, SCI, SVI, 0-100%TWD

QUERY: QueryM1

ROW	LINE	VOLTS	DEG	CHN	IND	%TW	LOCATION		EXT	EXT	UTIL 1	UTIL 2	CAL #	LEG	PROBE
95	39	0.30	123	P 2	TWD	13	VSM	+0.69	TEH	TEC			54	COLD	600UL
96	30	0.27	109	P 2	TWD	12	06H	+0.80	TEH	TEC			54	COLD	600UL
96	50	0.46	54	P 2	TWD	18	VC2	+0.80	TEC	TEH			8	HOT	600UL
96	150	0.53	116	P 2	TWD	19	VH2	-0.96	TEH	TEC			20	COLD	600UL
97	51	0.32	73	P 2	TWD	13	08C	-0.82	TEC	TEH			7	HOT	600UL
97	97	0.41	24	P 1	SCI		TSH	-0.11	TSH	TSH	0.23	0.17	78	HOT	580PP
98	74	0.27	163	P 2	TWD	11	VC2	+0.78	TEH	TEC			8	COLD	600UL
98	88	0.28	140	P 2	TWD	11	VH2	-0.63	TEH	TEC			10	COLD	600UL
99	51	0.39	90	P 2	TWD	15	VC2	-0.76	TEC	TEH			7	HOT	600UL
99	121	0.27	115	P 2	TWD	12	VH2	-0.89	TEC	TEH			1	HOT	600UL
99	123	0.19	113	P 2	TWD	9	VC2	+0.55	TEC	TEH			5	HOT	600UL
100	120	0.28	65	P 2	TWD	13	05H	-0.24	TEC	TEH			1	HOT	600UL
100	122	0.26	69	P 2	TWD	10	VH3	-0.84	TEC	TEH			6	HOT	600UL
101	27	0.31	56	P 2	TWD	13	VH2	+0.75	TEH	TEC			54	COLD	600UL
101	147	0.52	148	P 2	TWD	19	VSM	-0.66	TEH	TEC			19	COLD	600UL
102	26	0.39	45	P 2	TWD	16	06H	+0.83	TEH	TEC			55	COLD	600UL
105	133	0.15	70	2	SAI		08H	-0.41	08H	08H	0.30	0.46	155	HOT	580PP
106	30	0.35	125	P 2	TWD	15	06H	+0.84	TEH	TEC			54	COLD	600UL
107	97	0.23	140	P 2	TWD	10	VH3	-0.84	TEH	TEC			11	COLD	600UL
107	115	0.27	35	P 2	TWD	8	VH2	+0.86	07H	TEC			33	COLD	600UL
107	125	0.21	112	P 2	TWD	7	DBH	-1.61	TEC	TEH			6	HOT	600UL
108	36	0.35	65	P 2	TWD	15	DBC	-1.64	TEH	TEC			55	COLD	600UL
110	138	0.37	141	P 2	TWD	14	VC3	-0.88	TEH	TEC			19	COLD	600UL
111	37	0.61	37	P 2	TWD	22	DBH	+1.07	TEH	TEC			54	COLD	600UL
111	57	0.38	54	P 2	TWD	15	VH3	-0.80	TEC	TEH			7	HOT	600UL
111	93	0.22	78	P 2	TWD	9	05H	+0.93	TEH	TEC			11	COLD	600UL
111	101	0.23	89	P 2	TWD	10	DBH	-0.91	TEH	TEC			44	COLD	600UL
112	92	0.40	48	P 2	TWD	16	VH2	-0.77	TEH	TEC			11	COLD	600UL
112	144	1.00	165	P 2	TWD	28	DBH	+2.04	TEH	TEC			20	COLD	600UL
113	37	0.31	118	P 2	TWD	13	VH2	-0.97	TEH	TEC			55	COLD	600UL
113	39	0.45	130	P 2	TWD	18	DBH	+1.79	TEH	TEC			55	COLD	600UL
113	41	0.54	113	P 2	TWD	20	VH2	-0.59	TEH	TEC			53	COLD	600UL
113	99	0.31	138	P 2	TWD	12	VH2	-0.84	TEH	TEC			12	COLD	600UL
114	96	0.30	156	P 2	TWD	12	VH3	-0.79	TEH	TEC			12	COLD	600UL
114	108	0.14	126	P 1	SCI		TSH	+0.03	TSH	TSH	0.00	0.18	86	HOT	580PP
114	110	0.32	94	P 2	TWD	14	DBH	-1.75	TEC	TEH			1	HOT	600UL
116	102	0.42	125	P 2	TWD	17	DBH	+0.65	TEH	TEC			11	COLD	600UL

SG88 - MAI, MCI, MMI, MVI, SAI, SCI, SVI, 0-100%TWD

QUERY: QueryM1

ROW	LINE	VOLTS	DEG	CHN	IND	%TW	LOCATION		EXT	EXT	UTIL 1	UTIL 2	CAL #	LEG	PROBE
118	88	0.40	125	P 2	TWD	15	VH1	-0.71	TEH	TEC			10	COLD	600UL
		0.36	121	P 2	TWD	14	VH1	+0.71	TEH	TEC			10	COLD	600UL
119	39	0.27	152	P 2	TWD	11	VH1	-0.92	TEH	TEC			54	COLD	600UL
119	41	0.34	138	P 2	TWD	12	VH1	-0.82	TEH	TEC			52	COLD	600UL
119	55	0.35	95	P 2	TWD	14	DBH	+1.69	TEC	TEH			7	HOT	600UL
119	59	0.40	132	P 2	TWD	14	VH1	-1.01	TEC	TEH			3	HOT	600UL
119	61	0.36	136	P 2	TWD	13	VH1	-1.02	TEC	TEH			3	HOT	600UL
119	65	0.32	126	P 2	TWD	12	VH1	-1.17	TEC	TEH			3	HOT	600UL
119	67	0.41	136	P 2	TWD	15	VH1	-0.99	TEC	TEH			3	HOT	600UL
119	79	0.50	114	P 2	TWD	19	DBH	+2.00	TEH	TEC			8	COLD	600UL
119	95	0.47	104	P 2	TWD	18	DBH	-1.32	TEH	TEC			11	COLD	600UL
119	101	0.39	113	P 2	TWD	15	DBH	-1.85	TEH	TEC			11	COLD	600UL
120	38	0.43	115	P 2	TWD	17	DBC	+1.83	TEH	TEC			55	COLD	600UL
120	72	0.65	76	P 2	TWD	22	09C	-1.10	TEH	TEC			5	COLD	600UL
120	74	0.30	103	P 2	TWD	12	10H	-1.25	TEH	TEC			7	COLD	600UL
120	80	0.33	78	P 2	TWD	13	DBH	-1.90	TEH	TEC			8	COLD	600UL
120	86	0.25	65	P 2	TWD	9	DBH	-1.69	TEH	TEC			9	COLD	600UL
		0.39	100	P 2	TWD	14	10H	+1.45	TEH	TEC	LOCOK		9	COLD	600UL
120	88	0.39	65	P 2	TWD	14	03H	-0.15	TEH	TEC			9	COLD	600UL
120	92	0.27	116	P 2	TWD	11	10H	+0.11	TEH	TEC			11	COLD	600UL
		0.36	82	P 2	TWD	14	DBH	-2.10	TEH	TEC			11	COLD	600UL
120	120	0.30	122	P 2	TWD	13	VH1	-0.90	TEC	TEH			1	HOT	600UL
120	138	0.54	62	P 2	TWD	19	DBH	-1.62	TEH	TEC			20	COLD	600UL
121	39	0.44	38	P 2	TWD	18	03C	-0.94	TEH	TEC			55	COLD	600UL
121	41	0.52	146	P 2	TWD	19	VH1	-0.83	TEH	TEC			53	COLD	600UL
		0.31	47	P 2	TWD	13	VH1	+0.76	TEH	TEC			53	COLD	600UL
121	57	0.36	98	P 2	TWD	15	VH1	-1.05	TEC	TEH			8	HOT	600UL
121	67	0.21	41	P 2	TWD	8	DBH	-1.51	TEC	TEH			4	HOT	600UL
121	75	0.43	133	P 2	TWD	16	VH1	-0.78	TEH	TEC			8	COLD	600UL
121	95	0.62	118	P 2	TWD	21	VH1	-0.86	TEH	TEC			12	COLD	600UL
121	97	0.47	138	P 2	TWD	16	10H	+0.00	TEH	TEC			12	COLD	600UL
121	99	0.57	151	P 2	TWD	19	VH1	-0.73	TEH	TEC			12	COLD	600UL
121	125	0.26	96	P 2	TWD	12	10H	+0.70	TEC	TEH			5	HOT	600UL
122	94	0.30	143	P 2	TWD	12	DBH	+2.22	TEH	TEC			12	COLD	600UL
122	96	0.52	131	P 2	TWD	19	DBH	+1.85	TEH	TEC			12	COLD	600UL
122	112	0.20	91	P 2	TWD	9	10H	-1.16	TEC	TEH			1	HOT	600UL
122	114	0.34	84	P 2	TWD	14	10H	+0.86	TEC	TEH			1	HOT	600UL
122	124	0.46	126	P 2	TWD	19	DBH	+1.85	TEC	TEH			5	HOT	600UL
123	41	0.45	135	P 2	TWD	17	VH1	-0.87	TEH	TEC			53	COLD	600UL
123	55	0.47	100	P 2	TWD	17	VH1	+0.00	TEC	TEH			7	HOT	600UL

SG88 - MAI, MCI, MMI, MVI, SAI, SCI, SVI, 0-100%TWD

QUERY: QueryM1

ROW	LINE	VOLTS	DEG	CHN	IND	%TW	LOCATION		EXT	EXT	UTIL 1	UTIL 2	CAL #	LEG	PROBE
123	65	0.36	127	P 2	TWD	13	DBH	+0.02	TEC	TEH			3	HOT	600UL
		0.57	122	P 2	TWD	19	VH1	-0.91	TEC	TEH			3	HOT	600UL
123	67	0.44	137	P 2	TWD	15	VH1	-0.88	TEC	TEH			3	HOT	600UL
123	71	0.38	133	P 2	TWD	13	VH1	-0.84	TEH	TEC			5	COLD	600UL
123	77	0.28	102	P 2	TWD	12	VH2	-0.79	TEH	TEC			7	COLD	600UL
123	85	0.46	145	P 2	TWD	17	VH1	-0.81	TEH	TEC			8	COLD	600UL
123	97	0.50	144	P 2	TWD	17	VH1	-0.84	TEH	TEC			43	COLD	600UL
123	109	0.43	107	P 2	TWD	17	VH1	-1.07	TEC	TEH			1	HOT	600UL
123	111	0.46	67	P 2	TWD	18	DBH	+1.73	TEC	TEH			1	HOT	600UL
		0.40	91	P 2	TWD	17	VH1	-0.99	TEC	TEH			1	HOT	600UL
		0.27	106	P 2	TWD	12	10H	-0.99	TEC	TEH			1	HOT	600UL
123	115	0.37	95	P 2	TWD	15	VH1	-1.04	TEC	TEH			1	HOT	600UL
123	117	0.46	122	P 2	TWD	19	VH1	-0.96	TEC	TEH			1	HOT	600UL
123	121	0.47	94	P 2	TWD	19	VH1	-0.99	TEC	TEH			1	HOT	600UL
124	64	0.31	53	P 2	TWD	13	10H	-0.97	TEC	TEH			4	HOT	600UL
124	76	0.31	112	P 2	TWD	12	VH1	-0.79	TEH	TEC			7	COLD	600UL
125	57	0.32	81	P 2	TWD	14	VC3	+0.73	TEC	TEH			8	HOT	600UL
125	83	0.39	145	P 2	TWD	15	VH1	-0.84	TEH	TEC			8	COLD	600UL
		0.77	135	P 2	TWD	25	DBH	+2.05	TEH	TEC			8	COLD	600UL
125	85	0.42	128	P 2	TWD	16	VH1	-0.82	TEH	TEC			7	COLD	600UL
		0.25	122	P 2	TWD	11	VH2	-0.91	TEH	TEC			7	COLD	600UL
125	91	0.25	134	P 2	TWD	10	DBH	+1.83	TEH	TEC			11	COLD	600UL
125	97	0.58	131	P 2	TWD	20	VH1	-0.96	TEH	TEC			12	COLD	600UL
126	62	0.70	109	P 2	TWD	23	10H	-0.98	TEC	TEH			4	HOT	600UL
126	86	0.46	137	P 2	TWD	17	DBH	+1.94	TEH	TEC			10	COLD	600UL
126	90	0.42	122	P 2	TWD	16	DBH	+1.96	TEH	TEC			10	COLD	600UL
126	92	0.27	135	P 2	TWD	10	VH1	-0.84	TEH	TEC			12	COLD	600UL
126	112	0.37	29	P 2	TWD	16	DBH	+1.75	TEC	TEH			1	HOT	600UL
127	53	0.48	69	P 2	TWD	18	VH1	-0.92	TEC	TEH			7	HOT	600UL
127	59	0.43	106	P 2	TWD	15	VH1	-1.02	TEC	TEH			3	HOT	600UL
127	67	0.36	108	P 2	TWD	13	VH1	-0.79	TEC	TEH			3	HOT	600UL
127	75	0.42	152	P 2	TWD	16	VH1	-0.94	TEH	TEC			7	COLD	600UL
		0.25	139	P 2	TWD	11	VH1	+0.79	TEH	TEC			7	COLD	600UL
127	87	0.44	111	P 2	TWD	15	09H	-1.01	TEH	TEC			9	COLD	600UL
		0.49	127	P 2	TWD	17	10H	-1.03	TEH	TEC			9	COLD	600UL
127	95	0.33	149	P 2	TWD	14	VH1	-0.92	TEH	TEC			11	COLD	600UL
127	99	0.39	125	P 2	TWD	16	VH1	-0.87	TEH	TEC			11	COLD	600UL
127	101	0.19	103	P 2	TWD	8	VH3	+0.78	TEH	TEC			11	COLD	600UL
127	107	0.53	119	P 2	TWD	18	VH1	-0.71	TEC	TEH			2	HOT	600UL
127	109	0.27	102	P 2	TWD	12	VH1	-0.98	TEC	TEH			1	HOT	600UL
		0.56	121	P 2	TWD	21	09H	-0.99	TEC	TEH			1	HOT	600UL

SG88 - MAI, MCI, MMI, MVI, SAI, SCI, SVI, 0-100%TWD

QUERY: QueryM1

ROW	LINE	VOLTS	DEG	CHN	IND	%TW	LOCATION		EXT	EXT	UTIL 1	UTIL 2	CAL #	LEG	PROBE
127	115	0.37	137	P 2	TWD	15	VH1	-0.93	TEC	TEH			1	HOT	600UL
127	121	0.32	122	P 2	TWD	13	VH1	-0.99	TEC	TEH			1	HOT	600UL
127	125	0.54	117	P 2	TWD	18	VH1	-0.86	TEC	TEH			6	HOT	600UL
128	60	0.54	110	P 2	TWD	19	10H	-0.97	TEC	TEH			4	HOT	600UL
128	68	0.30	27	P 2	TWD	12	DBH	+1.51	TEC	TEH			4	HOT	600UL
128	88	0.64	108	P 2	TWD	21	10H	-1.10	TEH	TEC			9	COLD	600UL
128	108	0.29	119	P 2	TWD	11	VH1	-0.67	TEC	TEH			2	HOT	600UL
128	110	0.26	88	P 2	TWD	10	VH1	+0.78	TEC	TEH			2	HOT	600UL
129	47	0.67	143	P 2	TWD	24	VH3	-0.88	TEC	TEH			8	HOT	600UL
129	63	0.31	127	P 2	TWD	12	10H	-0.13	TEC	TEH			4	HOT	600UL
129	67	0.33	46	P 2	TWD	13	DBH	-1.73	TEC	TEH			4	HOT	600UL
129	73	0.46	153	P 2	TWD	18	VH1	-0.75	TEH	TEC			8	COLD	600UL
129	75	0.57	87	P 2	TWD	20	VH1	-0.80	TEH	TEC			8	COLD	600UL
129	87	0.41	152	P 2	TWD	15	VH1	-0.91	TEH	TEC			10	COLD	600UL
129	95	0.50	125	P 2	TWD	17	DBH	+2.09	TEH	TEC			12	COLD	600UL
		0.54	133	P 2	TWD	18	VH1	-0.89	TEH	TEC			12	COLD	600UL
129	109	0.27	153	P 2	TWD	10	VH1	-0.76	TEC	TEH			2	HOT	600UL
129	119	0.51	83	P 2	TWD	18	VH1	-0.91	TEC	TEH			2	HOT	600UL
129	121	0.36	155	P 2	TWD	13	VH1	-0.81	TEC	TEH			2	HOT	600UL
130	70	0.45	88	P 2	TWD	16	VH1	-0.76	TEC	TEH			3	HOT	600UL
130	74	0.80	113	P 2	TWD	26	10H	-1.04	TEH	TEC			8	COLD	600UL
130	94	0.48	147	P 2	TWD	16	10H	-1.00	TEH	TEC			12	COLD	600UL
130	106	0.47	129	P 2	TWD	17	VH1	-0.79	TEH	TEC			14	COLD	600UL
130	128	0.52	80	P 2	TWD	18	VH2	-0.54	TEC	TEH			6	HOT	600UL
131	77	0.60	23	P 2	TWD	21	DBH	+2.00	TEH	TEC			13	COLD	600UL
131	83	0.24	118	P 2	TWD	10	DBH	-1.85	TEH	TEC			13	COLD	600UL
131	89	0.68	127	P 2	TWD	23	10H	+0.90	TEH	TEC			13	COLD	600UL
131	127	0.52	126	P 2	TWD	19	03C	+0.83	TEH	TEC			17	COLD	600UL
132	94	0.63	78	P 2	TWD	22	10H	+0.92	TEH	TEC			13	COLD	600UL
133	61	0.39	129	P 2	TWD	15	VH1	-0.98	TEH	TEC			14	COLD	600UL
133	75	0.49	143	P 2	TWD	18	DBH	+1.91	TEH	TEC			14	COLD	600UL
133	83	0.41	148	P 2	TWD	15	10H	-1.02	TEH	TEC			14	COLD	600UL
133	87	0.45	85	P 2	TWD	17	VH1	-0.97	TEH	TEC			14	COLD	600UL
133	99	0.29	90	P 2	TWD	11	VH1	-0.89	TEH	TEC			14	COLD	600UL
133	109	0.12	143	2	SAI		07H	-7.41 TO-9.41	07H	07H	0.40	2.00	159	HOT	580PP
		0.09	122	2	SAI		07H	-13.68 TO-15.84	07H	07H	0.40	2.16	159	HOT	580PP
		0.18	122	2	SAI		07H	-16.47 TO-22.50	07H	07H	2.00	4.90	159	HOT	580PP
133	115	0.50	128	P 2	TWD	18	10H	+0.92	TEH	TEC			17	COLD	600UL
134	68	0.29	119	P 2	TWD	11	10H	-0.75	TEH	TEC	LAR		14	COLD	600UL

SG88 - MAI, MCI, MMI, MVI, SAI, SCI, SVI, 0-100%TWD

QUERY: QueryM1

ROW	LINE	VOLTS	DEG	CHN	IND	%TW	LOCATION		EXT	EXT	UTIL 1	UTIL 2	CAL #	LEG	PROBE
134	84	0.34	38	P 2	TWD	13	10H	-1.02	TEH	TEC			14	COLD	600UL
134	86	0.51	104	P 2	TWD	19	10H	-1.04	TEH	TEC			13	COLD	600UL
134	100	0.44	159	P 2	TWD	15	10H	+0.95	TEH	TEC			16	COLD	600UL
135	81	0.61	140	P 2	TWD	21	VH1	-0.83	TEH	TEC			14	COLD	600UL
135	87	0.24	161	P 2	TWD	10	10H	-0.94	TEH	TEC			13	COLD	600UL
135	93	0.30	79	P 2	TWD	12	10H	+0.88	TEH	TEC			13	COLD	600UL
135	97	0.24	120	P 2	TWD	10	10H	+0.94	TEH	TEC			13	COLD	600UL
		0.26	130	P 2	TWD	10	10H	-1.06	TEH	TEC			13	COLD	600UL
136	74	0.55	110	P 2	TWD	20	10H	-1.01	TEH	TEC			13	COLD	600UL
136	86	0.72	135	P 2	TWD	23	10H	-1.07	TEH	TEC			14	COLD	600UL
137	91	0.42	156	P 2	TWD	16	10H	-1.08	TEH	TEC			14	COLD	600UL
137	119	0.52	71	P 2	TWD	17	01C	-0.99	TEH	TEC			18	COLD	600UL
138	74	0.33	70	P 2	TWD	13	VH1	-0.75	TEH	TEC			13	COLD	600UL
138	78	0.38	94	P 2	TWD	15	VH1	-0.71	TEH	TEC			13	COLD	600UL
139	71	0.32	145	P 2	TWD	13	VH1	-0.89	TEH	TEC			13	COLD	600UL
139	105	0.49	131	P 2	TWD	17	10H	+0.88	TEH	TEC			18	COLD	600UL
140	88	0.27	147	P 2	TWD	11	DBH	+2.00	TEH	TEC			13	COLD	600UL
141	65	0.48	139	P 2	TWD	17	08C	+0.83	TEH	TEC			14	COLD	600UL
141	67	0.68	123	P 2	TWD	22	VC1	+0.85	TEH	TEC			14	COLD	600UL
141	79	0.35	145	P 2	TWD	14	VC1	+0.91	TEH	TEC			13	COLD	600UL
		0.87	75	P 2	TWD	27	DBC	+1.57	TEH	TEC			13	COLD	600UL
142	72	0.71	87	P 2	TWD	23	DBC	+1.43	TEH	TEC			14	COLD	600UL
142	82	0.76	134	P 2	TWD	24	DBC	+1.98	TEH	TEC			14	COLD	600UL
142	86	0.26	154	P 2	TWD	10	DBH	+1.88	TEH	TEC			13	COLD	600UL
142	90	0.28	129	P 2	TWD	11	DBH	+1.86	TEH	TEC			13	COLD	600UL
142	104	0.34	19	P 2	TWD	12	DBH	+1.90	TEH	TEC			16	COLD	600UL
142	110	0.54	54	P 2	TWD	18	DBH	+1.97	TEH	TEC			18	COLD	600UL
143	73	0.19	64	P 2	TWD	8	01H	-0.89	TEH	TEC			13	COLD	600UL
143	87	0.43	121	2	SAI		06H	+0.48	06H	06H	0.00	0.23	166	HOT	580PP
143	89	0.24	49	P 2	TWD	10	DBH	-1.90	TEH	TEC			13	COLD	600UL
143	109	0.30	136	P 2	TWD	10	DBH	-1.51	TEH	TEC			18	COLD	600UL
144	74	0.57	106	P 2	TWD	20	VC1	+0.90	TEH	TEC			14	COLD	600UL
144	78	0.41	141	P 2	TWD	15	DBC	-1.58	TEH	TEC			14	COLD	600UL
144	80	0.40	138	P 2	TWD	16	DBH	+1.99	TEH	TEC			13	COLD	600UL
144	82	0.75	88	P 2	TWD	25	DBC	+1.48	TEH	TEC			13	COLD	600UL
144	84	0.61	102	P 2	TWD	21	DBC	+1.31	TEH	TEC			13	COLD	600UL
144	86	0.30	147	P 2	TWD	12	DBH	+1.90	TEH	TEC			13	COLD	600UL
144	88	0.86	37	P 2	TWD	27	DBC	+1.38	TEH	TEC			13	COLD	600UL
144	90	0.78	57	P 2	TWD	24	DBC	+1.27	TEH	TEC			14	COLD	600UL

SG88 - MAI, MCI, MMI, MVI, SAI, SCI, SVI, 0-100%TWD

QUERY: QueryM1

ROW	LINE	VOLTS	DEG	CHN	IND	%TW	LOCATION		EXT	EXT	UTIL 1	UTIL 2	CAL #	LEG	PROBE
144	96	0.34	139	P 2	TWD	14	DBH	+2.16	TEH	TEC			13	COLD	600UL
144	106	1.01	91	P 2	TWD	28	DBC	+1.84	TEH	TEC			18	COLD	600UL
145	73	0.44	130	P 2	TWD	16	10H	-1.12	TEH	TEC			14	COLD	600UL
		1.01	106	P 2	TWD	29	DBH	+1.72	TEH	TEC			14	COLD	600UL
		0.63	133	P 2	TWD	21	VC1	+0.92	TEH	TEC			14	COLD	600UL
		1.32	18	P 2	TWD	33	DBC	+1.57	TEH	TEC			14	COLD	600UL
145	75	0.74	88	P 2	TWD	23	DBH	+1.89	TEH	TEC			14	COLD	600UL
		0.44	139	P 2	TWD	16	VH1	-0.89	TEH	TEC			14	COLD	600UL
145	79	0.39	147	P 2	TWD	14	DBC	+1.25	TEH	TEC			14	COLD	600UL
145	81	0.49	146	P 2	TWD	18	VH1	-0.85	TEH	TEC			13	COLD	600UL
		0.81	84	P 2	TWD	26	DBC	-1.32	TEH	TEC			13	COLD	600UL
145	83	0.32	147	P 2	TWD	12	DBH	-1.74	TEH	TEC			14	COLD	600UL
		0.48	80	P 2	TWD	17	VC1	+0.91	TEH	TEC			14	COLD	600UL
145	89	0.48	94	P 2	TWD	17	VC1	+0.83	TEH	TEC			14	COLD	600UL
		0.29	106	P 2	TWD	11	DBH	-1.72	TEH	TEC			14	COLD	600UL
145	91	1.13	21	P 2	TWD	30	DBC	+1.51	TEH	TEC			14	COLD	600UL
		0.43	138	P 2	TWD	16	VH2	+0.71	TEH	TEC			14	COLD	600UL
146	100	0.82	145	P 2	TWD	24	DBH	-1.85	TEH	TEC			16	COLD	600UL
147	85	0.79	96	P 2	TWD	25	DBC	+1.52	TEH	TEC			14	COLD	600UL
		0.72	139	P 2	TWD	23	VC1	-0.83	TEH	TEC			14	COLD	600UL
		0.40	140	P 2	TWD	15	DBH	-2.04	TEH	TEC			14	COLD	600UL
		0.36	56	P 2	TWD	14	VH1	+0.79	TEH	TEC			14	COLD	600UL
		0.80	111	P 2	TWD	25	VC1	+0.14	TEH	TEC			14	COLD	600UL
		1.23	130	P 2	TWD	32	VC1	+0.83	TEH	TEC			14	COLD	600UL
147	89	0.36	121	P 2	TWD	14	VC2	+0.81	TEH	TEC			14	COLD	600UL
		1.29	131	P 2	TWD	32	VC1	+0.79	TEH	TEC			14	COLD	600UL
147	91	0.58	145	P 2	TWD	20	VC1	-0.82	TEH	TEC			14	COLD	600UL
147	93	0.22	147	P 2	TWD	9	DBH	-1.75	TEH	TEC			14	COLD	600UL
		1.05	116	P 2	TWD	29	VC1	+0.90	TEH	TEC			14	COLD	600UL
		0.38	123	P 2	TWD	14	VC1	-0.54	TEH	TEC			14	COLD	600UL
		0.29	106	P 2	TWD	11	DBC	-1.57	TEH	TEC			14	COLD	600UL

Total Tubes : 465
Total Records: 556

Appendix 4

Inspection Summary

Steam Generator E-089

SG89 - MAI, MCI, MMI, MVI, SAI, SCI, SVI, 0-100%TWD

QUERY: QueryM1

ROW	LINE	VOLTS	DEG	CHN	IND	%TW	LOCATION			EXT	EXT	UTIL 1	UTIL 2	CAL #	LEG	PROBE
1	175	0.22	19	P 2	TWD	10	DBH	+1.25		DBH	TEH	LAR		14	HOT	600UL
2	154	0.23	107	2	SVI		TSH	+7.15	TO+7.39	TSH	TSH	0.39	0.35	133	HOT	580PP
2	158	0.17	111	2	SVI		TSH	+5.77	TO+5.92	TSH	TSH	0.31	0.29	133	HOT	580PP
4	120	0.43	79	2	SAI		07H	-0.02		07H	DBH	0.71	0.18	130	HOT	580PP
6	60	0.37	48	P 2	TWD	17	02H	-1.35		TEC	TEH	LOCOK		19	HOT	600UL
7	175	0.31	56	P 2	TWD	16	02C	+0.83		TEH	TEC			24	COLD	600UL
9	33	1.25	13	2	SAI		06H	+0.51		06H	06H	0.00	0.35	123	HOT	580PP
9	39	-0.41	65	P 2	TWD	18	03H	+0.85		TEH	TEC			46	COLD	600UL
10	52	0.34	90	P 2	TWD	16	01C	+0.23		TEC	TEH			9	HOT	600UL
11	119	0.30	65	P 2	TWD	13	07H	+0.87		TEC	TEH			24	HOT	600UL
11	141	0.56	26	P 1	SCI		TSH	-0.08		TSH	TSH	0.64	0.16	43	HOT	600PP
13	119	0.24	92	2	SAI		06H	-0.18		06H	06H	0.30	0.18	129	HOT	580PP
13	139	0.33	19	P 1	SCI		TSH	-4.91		TSH	TSH	0.19	0.19	39	HOT	600PP
14	116	0.36	87	P 2	TWD	14	07H	-0.23		TEC	TEH			23	HOT	600UL
14	174	0.11	86	2	SAI		03H	-1.25		03H	03H	0.00	0.28	137	HOT	580PP
16	42	0.25	17	P 1	SCI		TSH	-0.07		TSH	TSH	0.13	0.20	61	HOT	600PP
16	58	0.42	96	P 2	TWD	17	07H	-0.16		TEC	TEH			22	HOT	600UL
18	16	0.21	136	2	SAI		06H	+0.36		06H	06H	0.35	0.25	117	HOT	580PP
19	121	0.23	110	2	SAI		04H	-0.51		04H	04H	0.67	0.20	129	HOT	580PP
19	173	0.11	146	P 2	TWD	6	VSM	+0.81		TEH	TEC			24	COLD	600UL
20	58	0.46	128	P 2	TWD	19	01H	+0.93		TEC	TEH			22	HOT	600UL
21	113	0.30	130	P 2	TWD	13	07C	+0.80		STH	TEC			41	COLD	600UL
22	2	0.54	139	P 2	TWD	21	VSM	-0.89		TEH	TEC			46	COLD	600UL
22	60	0.73	16	2	SAI		TSH	-1.48		TSH	TSH	0.87	0.16	77	HOT	600PP
22	66	0.47	16	2	SAI		TSH	-2.22		TSH	TSH	0.49	0.16	82	HOT	600PP
22	126	0.15	108	2	SAI		02H	+5.14		02H	02H	0.12	0.22	129	HOT	580PP
23	169	0.42	67	P 2	TWD	18	02H	+0.88		TEH	TEC			25	COLD	600UL
24	48	0.79	26	P 1	SCI		TSH	-0.09		TSH	TSH	0.98	0.21	86	HOT	580PP
24	54	0.23	116	P 1	SCI		TSH	+0.16		TSH	TSH	0.36	0.29	81	HOT	600PP
24	112	0.17	131	P 1	MCI		TSH	+0.00	TO+0.12	TSH	TSH	0.17	0.17	60	HOT	600PP
25	115	0.19	125	P 1	SCI		TSH	+0.14	TO+0.31	TSH	TSH	0.35	0.17	60	HOT	600PP
26	118	0.21	93	P 1	MCI		TSH	+0.12		TSH	TSH	0.25	0.24	63	HOT	600PP
28	118	0.11	99	P 1	SCI		TSH	+0.12		TSH	TSH	0.29	0.31	64	HOT	600PP
29	49	0.20	77	P 1	SCI		TSH	+0.04		TSH	TSH	0.30	0.19	86	HOT	580PP
29	115	0.56	18	2	SAI		TSH	-0.80	TO-0.89	TSH	TSH	0.58	0.45	60	HOT	600PP
30	54	0.14	105	P 1	MCI		TSH	+0.12		TSH	TSH	0.36	0.24	81	HOT	600PP
30	108	0.25	20	P 2	TWD	13	06C	-0.86		TEC	TEH			30	HOT	600UL
31	65	0.18	106	2	SAI		TSH	+1.09		TSH	TSH	0.00	0.15	94	HOT	580PP

SG89 - MAI, MCI, MMI, MVI, SAI, SCI, SVI, 0-100%TWD

QUERY: QueryM1

ROW	LINE	VOLTS	DEG	CHN	IND	%TW	LOCATION		EXT	EXT	UTIL 1	UTIL 2	CAL #	LEG	PROBE
31	71	0.54	77	P 2	TWD	22	DBH -1.73		TEH	TEC			23	COLD	600UL
		0.29	147	P 2	TWD	14	DBC -1.73		TEH	TEC			23	COLD	600UL
		0.26	111	P 2	TWD	13	DBC +1.79		TEH	TEC			23	COLD	600UL
31	117	0.31	142	P 2	TWD	13	07C +0.41		TEC	TEH			24	HOT	600UL
34	54	0.86	13	2	SAI		07H -0.13		07H	07H	0.00	0.16	138	HOT	580PP
35	105	0.72	23	2	SAI		TEH +1.89		TEH	TEH	1.16	0.20	116	HOT	580PP
		2.04	29	2	SAI		TEH +3.69		TEH	TEH	3.53	0.41	116	HOT	580PP
		1.44	22	2	SAI		TEH +4.67		TEH	TEH	1.74	0.35	116	HOT	580PP
		1.33	26	2	SAI		TEH +4.92		TEH	TEH	1.26	0.17	116	HOT	580PP
		2.17	30	2	SAI		TEH +5.56		TEH	TEH	3.04	0.47	116	HOT	580PP
		2.73	26	2	SAI		TSH -6.79		TSH	TSH	2.33	0.34	158	HOT	580PP
		3.87	32	2	MAI		TSH -9.43		TSH	TSH	5.98	0.92	158	HOT	580PP
37	75	0.72	104	P 2	TWD	25	DBC -1.27		TEC	TEH			33	HOT	600UL
		0.45	130	P 2	TWD	19	DBC +1.70		TEC	TEH			33	HOT	600UL
37	107	0.40	16	2	SAI		TSH -5.75	TO-5.83	TSH	TSH	0.28	0.34	60	HOT	600PP
38	4	0.37	65	P 2	TWD	16	02C -0.94		TEH	TEC			51	COLD	600UL
		0.35	56	P 2	TWD	15	01C +0.06		TEH	TEC			51	COLD	600UL
38	52	0.13	130	2	SAI		02H +6.61		02H	02H	0.39	0.62	135	HOT	580PP
38	66	0.33	155	P 2	TWD	14	VSM -0.72		TEC	TEH			15	HOT	600UL
38	102	1.15	75	P 2	TWD	34	DBH -1.75		TEC	TEH			40	HOT	600UL
		0.28	52	P 2	TWD	13	DBH +1.69		TEC	TEH			40	HOT	600UL
38	164	0.28	109	2	SAI		06H +0.20		06H	06H	0.52	0.15	136	HOT	580PP
38	166	0.40	69	P 2	TWD	17	VSM -0.82		TEH	TEC			25	COLD	600UL
39	37	0.51	22	P 1	SCI		TSH -0.04		TSH	TSH	0.17	0.20	61	HOT	600PP
39	53	0.34	96	2	SAI		TSH +0.87		TSH	TSH	0.50	0.27	85	HOT	580PP
39	73	0.66	118	P 2	TWD	25	DBC -1.85		TEH	TEC			23	COLD	600UL
40	62	0.32	28	P 2	TWD	14	DBC -0.10		TEC	TEH			15	HOT	600UL
41	73	0.11	15	P 2	TWD	7	DBC -2.14		TEH	TEC			21	COLD	600UL
41	75	0.49	74	P 2	TWD	19	DBC +1.54		TEC	TEH			33	HOT	600UL
41	103	0.40	16	2	SAI		TSH -0.68		TSH	TSH	0.60	0.15	103	HOT	580PP
		0.29	142	P 2	TWD	13	VSM +0.80		TEC	TEH			40	HOT	600UL
41	159	0.34	78	P 2	TWD	14	01H +1.16		TEH	TEC			27	COLD	600UL
42	110	0.67	74	P 2	TWD	23	VSM -0.24		TEC	TEH			31	HOT	600UL
		0.87	116	P 2	TWD	27	VSM +0.93		TEC	TEH			31	HOT	600UL
42	168	0.53	148	P 2	TWD	23	VSM +1.06		TEH	TEC			24	COLD	600UL
42	170	0.74	92	P 2	TWD	28	VSM -0.30		TEH	TEC			24	COLD	600UL
43	79	0.81	74	P 2	TWD	25	DBH +1.74		TEC	TEH			32	HOT	600UL
43	101	0.72	65	P 2	TWD	26	DBC +1.74		TEC	TEH			40	HOT	600UL
44	18	0.35	150	P 2	TWD	16	VSM -0.83		TEH	TEC			54	COLD	600UL
		0.18	53	P 2	TWD	9	VSM +0.65		TEH	TEC	LAR		54	COLD	600UL
44	54	0.16	81	2	SAI		TSH +1.33		TSH	TSH	0.40	0.14	90	HOT	580PP
44	74	0.44	86	P 2	TWD	17	DBC -1.70		TEC	TEH			33	HOT	600UL
		0.27	7	P 2	TWD	12	DBC +1.94		TEC	TEH	LAR		33	HOT	600UL
44	100	1.13	107	P 2	TWD	27	DBC +1.67		TEC	TEH			41	HOT	600UL
44	108	0.94	119	P 2	TWD	32	VSM -0.87		TEC	TEH			30	HOT	600UL

SG89 - MAI, MCI, MMI, MVI, SAI, SCI, SVI, 0-100%TWD

QUERY: QueryM1

ROW	LINE	VOLTS	DEG	CHN	IND	%TW	LOCATION	EXT	EXT	UTIL 1	UTIL 2	CAL #	LEG	PROBE
44	112	0.45	143	P 2	TWD	23	VSM -0.86	TEC	TEH			28	HOT	600UL
45	73	0.20	133	P 2	TWD	11	DBC -2.03	TEH	TEC			21	COLD	600UL
45	99	0.57	46	P 2	TWD	23	DBC +1.82	TEC	TEH			40	HOT	600UL
		0.96	71	P 2	TWD	31	DBH -1.90	TEC	TEH			40	HOT	600UL
		0.89	57	P 2	TWD	30	DBC -1.75	TEC	TEH			40	HOT	600UL
45	103	0.43	120	P 2	TWD	18	VSM +0.97	TEC	TEH			40	HOT	600UL
45	145	0.28	55	P 2	TWD	12	VSM -0.75	TEH	TEC			33	COLD	600UL
45	167	0.51	54	P 2	TWD	22	VSM +0.89	TEH	TEC			24	COLD	600UL
46	104	0.69	136	P 2	TWD	26	VSM -0.84	TEC	TEH			40	HOT	600UL
		0.41	154	P 2	TWD	18	VSM +0.25	TEC	TEH			40	HOT	600UL
46	128	0.30	115	P 2	TWD	18	VSM -0.93	TEC	TEH			17	HOT	600UL
46	156	0.41	122	P 2	TWD	18	VSM -0.87	TEH	TEC			29	COLD	600UL
		0.22	144	P 2	TWD	11	VSM +0.91	TEH	TEC			29	COLD	600UL
46	162	0.29	103	P 2	TWD	13	VSM +0.87	TEH	TEC			26	COLD	600UL
47	33	0.46	39	P 2	TWD	17	DBH +1.89	TEH	TEC			48	COLD	600UL
47	45	1.69	23	2	SAI		TSH -5.84	TSH	TSH	1.72	0.35	65	HOT	600PP
47	49	0.41	136	P 1	MCI		TSH -0.00	TSH	TSH	0.43	0.53	85	HOT	580PP
47	101	0.67	95	P 2	TWD	25	DBC +1.75	TEC	TEH			40	HOT	600UL
47	121	0.26	147	P 2	TWD	8	VSM -0.97	TEC	TEH			23	HOT	600UL
48	6	0.60	104	P 2	TWD	23	08C -1.85	TEH	TEC	LOCOK		51	COLD	600UL
48	8	0.24	110	P 2	TWD	12	02C +0.86	TEH	TEC			51	COLD	600UL
48	34	0.27	33	P 2	TWD	12	VSM -0.59	TEH	TEC			47	COLD	600UL
48	66	0.76	157	P 2	TWD	24	VSM -0.93	TEC	TEH			16	HOT	600UL
48	98	0.73	137	P 2	TWD	20	DBH +1.85	TEC	TEH			41	HOT	600UL
		1.55	119	P 2	TWD	33	DBH +0.00	TEC	TEH	LAR		41	HOT	600UL
48	100	0.46	140	P 2	TWD	14	DBC +1.77	TEC	TEH			41	HOT	600UL
48	118	0.47	116	P 2	TWD	23	04H -1.04	TEC	TEH	LAR		28	HOT	600UL
49	49	0.31	59	P 2	TWD	14	08H +1.49	TEC	TEH	LOCOK		19	HOT	600UL
49	55	0.29	120	P 2	TWD	11	VSM -0.70	TEH	TEC			62	COLD	580SF
49	65	0.42	119	P 2	TWD	16	VSM -0.74	TEC	TEH			16	HOT	600UL
49	99	0.89	120	P 2	TWD	23	DBC -1.56	TEC	TEH			41	HOT	600UL
		0.55	110	P 2	TWD	16	DBH -1.79	TEC	TEH			41	HOT	600UL
49	109	0.38	113	P 2	TWD	15	08H -1.06	TEC	TEH			31	HOT	600UL
49	111	0.54	71	P 2	TWD	24	08H -1.27	TEC	TEH	LOCOK		30	HOT	600UL
49	113	0.42	44	P 2	TWD	17	08H -0.99	STH	TEC			43	COLD	600UL
49	145	0.66	36	P 2	TWD	24	08H -1.07	TEH	TEC			33	COLD	600UL
50	44	0.39	122	P 2	TWD	16	VSM -0.83	TEH	TEC			4	COLD	600UL
50	52	0.17	130	P 1	SCI		TSH -0.00	TSH	TSH	0.00	0.26	86	HOT	580PP
50	58	0.42	101	P 2	TWD	17	02H -1.19	TEC	TEH			22	HOT	600UL
50	64	0.44	59	P 2	TWD	17	08H +1.02	TEC	TEH			16	HOT	600UL

SG89 - MAI, MCI, MMI, MVI, SAI, SCI, SVI, 0-100%TWD

QUERY: QueryM1

ROW	LINE	VOLTS	DEG	CHN	IND	%TW	LOCATION		EXT	EXT	UTIL 1	UTIL 2	CAL #	LEG	PROBE
50	74	0.38	105	P 2	TWD	16	DBC	+1.54	TEC	TEH			33	HOT	600UL
		0.26	142	P 2	TWD	11	DBC	-1.70	TEC	TEH			33	HOT	600UL
50	76	0.45	103	P 2	TWD	18	DBC	-1.72	TEC	TEH			33	HOT	600UL
50	82	0.72	71	P 2	TWD	23	DBC	+1.79	TEC	TEH			32	HOT	600UL
		0.30	114	P 2	TWD	11	DBH	-1.73	TEC	TEH			32	HOT	600UL
		0.29	152	P 2	TWD	12	DBC	-1.89	TEC	TEH			32	HOT	600UL
50	98	1.14	133	P 2	TWD	34	DBH	-1.67	TEC	TEH			40	HOT	600UL
50	100	0.38	86	P 2	TWD	17	01H	+0.93	TEC	TEH			40	HOT	600UL
51	61	0.40	155	P 2	TWD	18	08C	-0.73	TEC	TEH			21	HOT	600UL
51	75	0.54	115	P 2	TWD	20	DBC	-1.80	STH	TEC			42	COLD	600UL
51	95	0.40	76	P 2	TWD	18	DBC	+1.80	TEC	TEH			40	HOT	600UL
51	97	0.86	58	P 2	TWD	29	DBC	-2.00	TEC	TEH			40	HOT	600UL
		0.41	61	P 2	TWD	18	DBH	-2.00	TEC	TEH			40	HOT	600UL
51	99	1.02	97	P 2	TWD	32	DBC	-2.00	TEC	TEH			40	HOT	600UL
		0.56	116	P 2	TWD	22	VSM	+0.84	TEC	TEH			40	HOT	600UL
		0.30	68	P 2	TWD	14	VH3	+0.78	TEC	TEH			40	HOT	600UL
		0.40	29	P 2	TWD	18	VC3	+0.82	TEC	TEH			40	HOT	600UL
		0.13	78	P 2	TWD	6	VC3	-0.60	TEC	TEH			40	HOT	600UL
52	18	0.45	135	P 2	TWD	19	VH3	-1.04	TEH	TEC			54	COLD	600UL
52	76	0.34	61	P 2	TWD	13	DBC	-1.50	TEC	TEH			32	HOT	600UL
52	80	0.47	79	P 2	TWD	17	DBC	-2.00	TEC	TEH			32	HOT	600UL
52	84	0.27	42	P 2	TWD	10	DBH	-1.76	TEC	TEH			32	HOT	600UL
52	92	0.76	146	P 2	TWD	20	DBC	+1.86	TEC	TEH			41	HOT	600UL
		1.41	109	P 2	TWD	31	DBH	-1.64	TEC	TEH			41	HOT	600UL
		0.44	109	P 2	TWD	13	DBH	+1.43	TEC	TEH			41	HOT	600UL
52	96	0.39	151	P 2	TWD	12	DBH	-1.40	TEC	TEH			41	HOT	600UL
53	77	0.39	106	P 2	TWD	14	DBC	-1.80	TEC	TEH			32	HOT	600UL
53	83	0.87	82	P 2	TWD	26	DBC	-1.82	TEC	TEH			32	HOT	600UL
		0.35	58	P 2	TWD	13	DBH	+1.71	TEC	TEH			32	HOT	600UL
53	141	0.34	84	P 2	TWD	14	VC3	+0.83	TEH	TEC			33	COLD	600UL
54	82	1.18	81	P 2	TWD	33	DBC	+1.71	TEC	TEH			33	HOT	600UL
54	92	0.63	131	P 2	TWD	24	DBC	+1.88	TEC	TEH			40	HOT	600UL
		1.43	88	P 2	TWD	37	DBH	-1.61	TEC	TEH			40	HOT	600UL
54	94	0.94	124	P 2	TWD	24	DBH	-1.32	TEC	TEH			41	HOT	600UL
54	128	0.30	60	P 2	TWD	18	02H	-1.24	TEC	TEH			17	HOT	600UL
55	69	0.17	107	2	SAI		TSH	+0.85	TSH	TSH	0.00	0.15	94	HOT	580PP
55	81	1.07	120	P 2	TWD	31	DBC	-1.65	TEC	TEH			33	HOT	600UL
55	83	1.24	106	P 2	TWD	34	DBC	-1.74	TEC	TEH			33	HOT	600UL
55	95	1.42	73	P 2	TWD	37	DBC	+1.93	TEC	TEH			40	HOT	600UL
55	151	0.40	67	P 2	TWD	18	VH3	+0.85	TEH	TEC			31	COLD	600UL
56	34	0.38	35	P 2	TWD	17	VC3	+0.80	TEH	TEC			47	COLD	600UL
		0.42	122	P 2	TWD	18	VH3	-0.65	TEH	TEC			47	COLD	600UL
		0.38	57	P 2	TWD	16	VH3	+0.76	TEH	TEC			47	COLD	600UL
56	64	0.23	120	P 2	TWD	11	VH3	-0.96	TEC	TEH			15	HOT	600UL
56	82	0.39	50	P 2	TWD	15	VH3	+0.80	TEC	TEH			32	HOT	600UL

SG89 - MAI, MCI, MMI, MVI, SAI, SCI, SVI, 0-100%TWD

QUERY: QueryM1

ROW	LINE	VOLTS	DEG	CHN	IND	%TW	LOCATION		EXT	EXT	UTIL 1	UTIL 2	CAL #	LEG	PROBE
		0.85	92	P 2	TWD	26	VH3	-0.76	TEC	TEH			32	HOT	600UL
56	84	0.57	141	P 2	TWD	21	DBC	-1.80	STH	TEC			42	COLD	600UL
		0.44	104	P 2	TWD	17	DBH	+1.82	STH	TEC			42	COLD	600UL
56	88	1.29	116	P 2	TWD	34	DBH	+1.75	TEC	TEH			33	HOT	600UL
56	90	0.36	113	P 2	TWD	14	DBC	+1.61	TEC	TEH			37	HOT	600UL
		1.43	66	P 2	TWD	35	DBH	-1.24	TEC	TEH			37	HOT	600UL
		0.29	150	P 2	TWD	11	DBH	+1.41	TEC	TEH			37	HOT	600UL
56	94	0.65	60	P 2	TWD	25	DBH	-1.75	TEC	TEH			40	HOT	600UL
56	104	0.50	159	P 2	TWD	17	DBC	-0.47	TEC	TEH			41	HOT	600UL
56	108	0.32	58	P 2	TWD	13	VSM	+0.65	TEC	TEH			31	HOT	600UL
56	146	0.52	25	P 2	TWD	20	VH3	-0.68	TEH	TEC			30	COLD	600UL
56	152	0.35	78	P 2	TWD	16	DBH	+1.02	TEH	TEC			29	COLD	600UL
56	158	0.48	87	P 2	TWD	21	VH3	-0.63	TEH	TEC			29	COLD	600UL
56	162	0.66	99	P 2	TWD	24	VH3	-0.85	TEH	TEC			27	COLD	600UL
57	69	0.14	113	2	MAI		TSH	+2.02 TO+2.96	TSH	TSH	0.24	0.21	93	HOT	580PP
57	79	0.54	84	P 2	TWD	19	DBC	-1.90	TEC	TEH			32	HOT	600UL
57	81	0.13	105	2	SAI		TSH	+1.22	TSH	TSH	0.00	0.22	98	HOT	580PP
57	83	0.98	72	P 2	TWD	28	DBC	-1.82	TEC	TEH			32	HOT	600UL
57	105	0.27	18	P 1	SCI		TSH	-0.12	TSH	TSH	0.40	0.19	102	HOT	580PP
58	16	0.55	127	P 2	TWD	22	VH3	-0.71	TEH	TEC			54	COLD	600UL
58	82	0.35	106	P 2	TWD	15	DBH	+1.54	TEC	TEH			33	HOT	600UL
58	88	1.49	112	P 2	TWD	36	DBH	+1.72	TEC	TEH			32	HOT	600UL
58	90	0.77	73	P 2	TWD	28	DBH	-1.83	TEC	TEH			36	HOT	600UL
59	25	0.56	135	P 2	TWD	24	VH3	-0.73	TEH	TEC			50	COLD	600UL
59	99	0.26	103	P 1	SCI		TSH	+0.12	TSH	TSH	0.00	0.36	102	HOT	580PP
59	143	0.25	149	P 2	TWD	12	VH3	-0.71	TEH	TEC			33	COLD	600UL
60	88	0.69	146	P 2	TWD	22	DBH	+1.40	TEC	TEH			32	HOT	600UL
60	94	0.37	134	P 2	TWD	16	DBC	-2.02	TEC	TEH			40	HOT	600UL
61	87	0.53	83	P 1	SCI		TSH	+0.04	TSH	TSH	0.53	0.90	98	HOT	580PP
61	93	0.27	132	P 1	SCI		TSH	+0.05	TSH	TSH	0.00	0.19	106	HOT	580PP
62	84	0.43	151	P 2	TWD	17	DBC	-1.93	TEC	TEH			33	HOT	600UL
		0.71	122	P 2	TWD	24	DBH	-1.81	TEC	TEH			33	HOT	600UL
62	90	0.21	137	P 1	SCI		TSH	+0.11	TSH	TSH	0.25	0.16	102	HOT	580PP
62	94	0.69	147	P 2	TWD	19	DBC	+1.90	TEC	TEH			41	HOT	600UL
62	126	0.22	78	P 2	TWD	10	VH3	+0.77	TEC	TEH			18	HOT	600UL
63	35	0.25	150	P 2	TWD	10	VH3	-0.54	TEH	TEC			48	COLD	600UL
63	45	0.34	66	P 2	TWD	15	VSM	-0.76	TEH	TEC			4	COLD	600UL
63	61	0.41	50	P 2	TWD	17	03H	-0.95	TEC	TEH			22	HOT	600UL
63	79	0.82	86	P 2	TWD	27	DBC	-1.86	TEC	TEH			33	HOT	600UL
63	83	0.78	149	P 2	TWD	26	DBC	-1.93	TEC	TEH			33	HOT	600UL

SG89 - MAI, MCI, MMI, MVI, SAI, SCI, SVI, 0-100%TWD

QUERY: QueryM1

ROW	LINE	VOLTS	DEG	CHN	IND	%TW	LOCATION		EXT	EXT	UTIL 1	UTIL 2	CAL #	LEG	PROBE
63	87	0.68	128	P 2	TWD	24	DBH	-1.60	STH	TEC			42	COLD	600UL
63	91	0.28	24	2	SAI		TSH	-0.97	TSH	TSH	0.71	0.23	102	HOT	580PP
63	145	0.43	57	P 2	TWD	16	VH3	+0.85	TEH	TEC			30	COLD	600UL
64	10	0.52	137	P 2	TWD	21	03C	-0.97	TEH	TEC			51	COLD	600UL
64	82	0.65	115	P 2	TWD	23	DBC	+1.89	TEC	TEH			33	HOT	600UL
64	84	0.41	102	P 2	TWD	15	DBH	+1.87	TEC	TEH			32	HOT	600UL
64	136	0.31	140	P 2	TWD	15	VC3	-1.16	TEH	TEC			35	COLD	600UL
65	37	0.41	89	P 2	TWD	19	VSM	-0.70	TEH	TEC			45	COLD	600UL
65	79	0.18	87	2	SAI		TSH	+1.80	TSH	TSH	0.00	0.19	98	HOT	580PP
		0.39	146	P 2	TWD	15	DBC	-1.50	TEC	TEH			32	HOT	600UL
65	81	0.24	114	2	MAI		TSH	+0.65	TSH	TSH	0.39	0.36	98	HOT	580PP
65	89	0.66	113	P 2	TWD	26	DBH	+1.83	TEC	TEH			36	HOT	600UL
65	155	0.42	70	P 2	TWD	17	VH3	-0.72	TEH	TEC			28	COLD	600UL
66	80	0.23	65	P 2	TWD	9	DBC	+1.90	TEC	TEH			32	HOT	600UL
66	84	0.45	32	P 2	TWD	18	DBH	-1.89	TEC	TEH			33	HOT	600UL
66	94	0.45	44	P 2	TWD	19	DBC	+1.75	TEC	TEH			40	HOT	600UL
66	138	0.31	113	P 2	TWD	16	08C	-0.97	TEH	TEC			34	COLD	600UL
66	144	0.46	72	P 2	TWD	21	VH3	-0.94	TEH	TEC			32	COLD	600UL
		0.52	100	P 2	TWD	23	VSM	-0.85	TEH	TEC			32	COLD	600UL
		0.58	77	P 2	TWD	25	06C	-0.87	TEH	TEC			32	COLD	600UL
67	31	0.82	89	2	SAI		04H	+0.59	04H	04H	0.75	0.38	122	HOT	580PP
67	83	0.23	132	P 2	TWD	11	DBH	-1.97	TEC	TEH			33	HOT	600UL
		0.70	128	P 2	TWD	24	DBC	-1.95	TEC	TEH			33	HOT	600UL
68	84	0.18	25	P 2	TWD	7	VSM	-0.75	TEC	TEH			32	HOT	600UL
68	90	0.70	113	P 2	TWD	26	DBC	-1.97	TEC	TEH			36	HOT	600UL
68	112	0.11	115	2	SAI		01H	+6.27	01H	01H	0.20	0.30	124	HOT	580PP
68	128	0.36	71	P 2	TWD	16	VH3	-0.79	TEC	TEH			18	HOT	600UL
68	162	0.48	114	P 2	TWD	19	VH3	-0.78	TEH	TEC			27	COLD	600UL
69	151	0.37	55	P 2	TWD	15	VH3	-0.74	TEH	TEC			30	COLD	600UL
		0.31	43	P 2	TWD	13	VH3	+0.89	TEH	TEC			30	COLD	600UL
70	38	0.40	117	P 2	TWD	17	VC3	+0.70	TEH	TEC			4	COLD	600UL
70	66	0.38	23	P 1	SCI		TSH	+0.07	TSH	TSH	0.15	0.21	90	HOT	580PP
70	76	0.39	77	P 2	TWD	16	VSM	+1.00	TEC	TEH			33	HOT	600UL
70	112	0.53	133	P 2	TWD	19	03C	-0.06	TEC	TEH			29	HOT	600UL
70	144	0.38	119	P 2	TWD	18	VC3	-0.75	TEH	TEC			32	COLD	600UL
70	152	0.35	105	P 2	TWD	13	VH3	-0.92	TEH	TEC			30	COLD	600UL
71	63	0.30	18	P 1	SCI		TSH	-0.18	TSH	TSH	0.00	0.17	90	HOT	580PP
71	79	0.53	147	P 2	TWD	20	DBC	-1.66	TEC	TEH			33	HOT	600UL
71	91	0.26	144	P 2	TWD	13	DBC	-2.10	TEC	TEH			36	HOT	600UL
71	97	1.02	62	P 2	TWD	33	VSM	-0.02	TEC	TEH			36	HOT	600UL

SG89 - MAI, MCI, MMI, MVI, SAI, SCI, SVI, 0-100%TWD

QUERY: QueryM1

ROW	LINE	VOLTS	DEG	CHN	IND	%TW	LOCATION	EXT	EXT	UTIL 1	UTIL 2	CAL #	LEG	PROBE
71	143	0.46	113	P 2	TWD	18	VH3 -0.82	TEH	TEC			33	COLD	600UL
		0.31	91	P 2	TWD	13	04C -0.20	TEH	TEC			33	COLD	600UL
71	147	0.74	102	P 2	TWD	28	VH3 -0.84	TEH	TEC			31	COLD	600UL
		0.45	117	P 2	TWD	20	VC3 -0.84	TEH	TEC			31	COLD	600UL
72	26	0.60	147	P 2	TWD	26	VC3 +0.89	TEH	TEC			50	COLD	600UL
72	78	0.21	145	P 2	TWD	9	VH3 +0.83	TEC	TEH			32	HOT	600UL
		0.18	152	P 2	TWD	7	VC3 +0.83	TEC	TEH			32	HOT	600UL
		0.48	71	P 2	TWD	17	VH3 -0.89	TEC	TEH			32	HOT	600UL
72	80	0.31	110	P 2	TWD	12	VC3 +0.97	TEC	TEH			32	HOT	600UL
72	84	0.27	118	P 2	TWD	10	VH3 -0.79	TEC	TEH			32	HOT	600UL
		0.37	113	P 2	TWD	14	DBC -2.00	TEC	TEH			32	HOT	600UL
72	90	0.31	82	P 2	TWD	15	DBC -1.61	TEC	TEH			36	HOT	600UL
72	114	0.29	47	P 2	TWD	17	VC3 +0.83	TEC	TEH			28	HOT	600UL
72	126	0.40	91	P 2	TWD	22	VSM -0.77	TEC	TEH			17	HOT	600UL
72	156	0.22	65	P 2	TWD	10	VC3 -0.83	TEH	TEC			28	COLD	600UL
73	13	0.41	80	P 2	TWD	18	VH3 +0.90	TEH	TEC			54	COLD	600UL
73	103	0.49	127	P 2	TWD	18	02H -1.25	TEC	TEH			37	HOT	600UL
73	105	1.05	63	P 2	TWD	29	VSM -0.77	TEC	TEH			37	HOT	600UL
		0.79	29	P 2	TWD	25	VH3 -0.43	TEC	TEH			37	HOT	600UL
		1.62	113	P 2	TWD	37	VC3 -0.73	TEC	TEH			37	HOT	600UL
74	44	0.68	136	P 2	TWD	25	VH3 -0.74	TEH	TEC			4	COLD	600UL
74	54	0.20	150	P 2	TWD	9	DBH -2.01	TEC	TEH			22	HOT	600UL
74	56	0.31	81	P 2	TWD	14	DBH +1.31	TEC	TEH			22	HOT	600UL
74	72	0.32	86	P 1	SCI		TSH +0.05	TSH	TSH	0.69	0.22	98	HOT	580PP
74	96	0.44	44	P 2	TWD	20	02H -1.18	TEC	TEH			36	HOT	600UL
74	132	0.27	99	P 2	TWD	11	VC3 -0.90	TEH	TEC			37	COLD	600UL
74	148	0.37	149	P 2	TWD	14	VH3 -0.85	TEH	TEC			30	COLD	600UL
		0.36	59	P 2	TWD	13	VSM -0.85	TEH	TEC			30	COLD	600UL
74	156	0.57	128	P 2	TWD	23	VH3 -0.92	TEH	TEC			29	COLD	600UL
		0.57	103	P 2	TWD	23	VSM -0.86	TEH	TEC			29	COLD	600UL
		0.61	67	P 2	TWD	24	VC3 -0.80	TEH	TEC			29	COLD	600UL
74	160	0.54	135	P 2	TWD	21	VC3 -0.85	TEH	TEC			26	COLD	600UL
		1.17	106	P 2	TWD	33	VH3 -0.81	TEH	TEC			26	COLD	600UL
75	51	0.20	116	P 2	TWD	9	DBH -1.93	TEC	TEH			20	HOT	600UL
75	79	0.53	120	P 2	TWD	20	DBC -1.81	TEC	TEH			33	HOT	600UL
75	85	1.11	24	P 2	TWD	32	DBC +1.62	TEC	TEH			33	HOT	600UL
75	87	0.41	152	P 2	TWD	17	DBC -1.93	TEC	TEH			33	HOT	600UL
75	105	0.18	88	P 1	SCI		TSH +0.09	TSH	TSH	0.17	0.11	103	HOT	580PP
		0.46	98	P 2	TWD	20	VSM -0.20	TEC	TEH			36	HOT	600UL
		0.48	124	P 2	TWD	21	VH3 -0.79	TEC	TEH			36	HOT	600UL
75	111	0.62	124	P 2	TWD	22	VH3 +0.10	TEC	TEH			31	HOT	600UL
		0.90	125	P 2	TWD	28	VC3 +1.02	TEC	TEH			31	HOT	600UL
76	42	0.33	132	P 2	TWD	17	DBC -1.55	TEH	TEC			3	COLD	600UL
76	78	0.45	126	P 2	TWD	16	VC3 +0.91	TEC	TEH			32	HOT	600UL
		0.21	159	P 2	TWD	8	VC3 -0.97	TEC	TEH			32	HOT	600UL

SG89 - MAI, MCI, MMI, MVI, SAI, SCI, SVI, 0-100%TWD

QUERY: QueryM1

ROW	LINE	VOLTS	DEG	CHN	IND	%TW	LOCATION		EXT	EXT	UTIL 1	UTIL 2	CAL #	LEG	PROBE
76	114	0.37	92	P 2	TWD	20	VH3	-0.66	TEC	TEH			28	HOT	600UL
76	142	0.27	98	P 2	TWD	12	08C	-0.53	TEH	TEC			33	COLD	600UL
77	27	0.30	98	P 2	TWD	14	DBC	-1.98	TEH	TEC			49	COLD	600UL
77	43	0.35	154	P 2	TWD	15	VH3	+0.81	TEH	TEC			4	COLD	600UL
77	113	0.27	97	P 2	TWD	11	VH3	-0.99	TEC	TEH			29	HOT	600UL
77	137	0.65	85	P 2	TWD	26	VSM	-0.85	TEH	TEC			34	COLD	600UL
77	139	0.35	137	P 2	TWD	18	VH3	-0.83	TEH	TEC			32	COLD	600UL
		0.68	140	P 2	TWD	28	VC3	+0.87	TEH	TEC			32	COLD	600UL
78	44	0.40	142	P 2	TWD	17	VSM	-0.83	TEH	TEC			4	COLD	600UL
78	122	0.24	129	P 2	TWD	12	08H	+0.87	TEC	TEH			18	HOT	600UL
78	130	0.32	67	P 2	TWD	13	VSM	-0.89	TEH	TEC			36	COLD	600UL
78	150	0.59	55	P 2	TWD	22	VH3	-0.73	TEH	TEC			30	COLD	600UL
79	43	0.33	61	P 2	TWD	17	VH3	-0.61	TEH	TEC			3	COLD	600UL
79	121	0.68	101	P 2	TWD	30	VH3	-0.95	TEC	TEH			17	HOT	600UL
80	86	0.43	57	P 2	TWD	16	01H	-1.07	TEC	TEH			32	HOT	600UL
80	106	0.24	46	P 2	TWD	12	VH3	+0.89	TEC	TEH			40	HOT	600UL
80	152	0.51	114	P 2	TWD	22	VSM	+0.85	TEH	TEC			31	COLD	600UL
		0.77	130	P 2	TWD	28	VSM	-0.85	TEH	TEC			31	COLD	600UL
		0.70	103	P 2	TWD	26	VC3	-0.87	TEH	TEC			31	COLD	600UL
		0.76	102	P 2	TWD	28	VC3	+0.83	TEH	TEC			31	COLD	600UL
81	43	0.81	121	P 2	TWD	28	VSM	-0.84	TEH	TEC			4	COLD	600UL
		0.51	115	P 2	TWD	20	VC3	-0.58	TEH	TEC			4	COLD	600UL
81	55	0.34	85	P 2	TWD	16	VH3	-0.80	TEC	TEH			21	HOT	600UL
81	75	0.21	86	P 2	TWD	9	VC3	+0.79	TEC	TEH			32	HOT	600UL
81	79	0.47	85	P 2	TWD	17	VH3	-0.91	TEC	TEH			32	HOT	600UL
81	85	0.27	42	P 2	TWD	10	VH3	+0.78	TEC	TEH			32	HOT	600UL
81	105	0.24	118	P 2	TWD	11	VSM	+0.93	TEC	TEH			40	HOT	600UL
		0.41	89	P 2	TWD	18	VH3	+0.83	TEC	TEH			40	HOT	600UL
81	135	0.37	101	P 2	TWD	18	VH3	+0.87	TEH	TEC			34	COLD	600UL
82	28	0.37	135	P 2	TWD	16	VH3	-0.72	TEH	TEC			49	COLD	600UL
82	68	0.82	114	P 2	TWD	27	VH3	-0.84	TEC	TEH			10	HOT	600UL
		0.39	147	P 2	TWD	16	VH3	+0.78	TEC	TEH			10	HOT	600UL
82	148	0.81	118	P 2	TWD	29	VH3	-0.81	TEH	TEC			31	COLD	600UL
84	96	0.60	22	P 1	SCI		TSH	-0.12	TSH	TSH	0.35	0.21	103	HOT	580PP
85	93	0.49	23	P 1	SCI		TSH	-0.09	TSH	TSH	0.00	0.19	107	HOT	580PP
85	99	0.53	32	P 2	TWD	19	02H	-1.24	TEC	TEH			37	HOT	600UL
85	119	0.38	24	P 1	SCI		TSH	-0.05	TSH	TSH	0.20	0.22	64	HOT	600PP
85	123	0.34	13	P 1	SCI		TSH	-0.14	TSH	TSH	0.55	0.26	69	HOT	600PP
86	82	0.67	24	P 1	MCI		TSH	-0.12	TSH	TSH	0.98	0.16	98	HOT	580PP
88	36	0.40	77	P 2	TWD	17	VH2	-0.74	TEH	TEC			47	COLD	600UL
88	40	0.39	111	P 2	TWD	18	VH2	-0.79	TEH	TEC			3	COLD	600UL

SG89 - MAI, MCI, MMI, MVI, SAI, SCI, SVI, 0-100%TWD

QUERY: QueryM1

ROW	LINE	VOLTS	DEG	CHN	IND	%TW	LOCATION	EXT	EXT	UTIL 1	UTIL 2	CAL #	LEG	PROBE
88	58	0.41	92	P 2	TWD	19	VH2 -0.90	TEC	TEH			21	HOT	600UL
88	68	0.28	102	P 2	TWD	13	VH2 -1.00	TEC	TEH			9	HOT	600UL
88	140	0.55	122	P 2	TWD	24	VH2 +1.14	TEH	TEC			32	COLD	600UL
89	85	0.32	44	P 2	TWD	12	VH2 -0.89	TEC	TEH			32	HOT	600UL
90	24	0.36	86	P 2	TWD	17	VH2 -1.00	TEH	TEC			17	COLD	600UL
		0.38	26	P 2	TWD	18	VSM -0.79	TEH	TEC			17	COLD	600UL
90	34	0.29	158	P 2	TWD	15	VH2 -0.92	TEH	TEC			17	COLD	600UL
90	52	0.39	116	P 2	TWD	16	VH2 -0.99	TEC	TEH			1	HOT	600UL
90	94	0.23	160	P 2	TWD	11	VSM -0.78	TEH	TEC			10	COLD	600UL
90	140	0.31	121	P 2	TWD	14	VH2 -0.81	TEH	TEC			25	COLD	600UL
90	144	0.48	34	P 2	TWD	19	VSM +0.89	TEH	TEC			25	COLD	600UL
91	43	0.50	91	P 2	TWD	20	06C -0.98	TEH	TEC			18	COLD	600UL
91	145	0.32	116	P 2	TWD	14	VH2 -0.75	TEH	TEC			25	COLD	600UL
91	151	0.39	52	P 2	TWD	17	VH2 -0.78	TEH	TEC			25	COLD	600UL
93	23	1.08	90	P 2	TWD	34	02C +0.87	TEH	TEC			17	COLD	600UL
93	35	0.15	107	2	MAI		05H +12.20 TO+20.90	05H	06H	0.00	8.70	156	HOT	580PP
		0.25	128	2	MAI		05H +23.40 TO+33.80	05H	06H	0.00	10.40	156	HOT	580PP
93	115	0.41	15	2	SAI		TSH -0.36	TSH	TSH	0.46	0.46	88	HOT	600PP
94	26	0.46	102	P 2	TWD	19	VH2 +0.96	TEH	TEC			18	COLD	600UL
94	50	0.25	105	P 2	TWD	11	05C +0.00	TEC	TEH			2	HOT	600UL
94	146	0.29	141	P 2	TWD	13	VH3 -0.87	TEH	TEC			25	COLD	600UL
95	33	0.28	112	2	SAI		05H +0.62	05H	05H	0.00	0.28	131	HOT	580PP
96	48	0.34	89	P 2	TWD	15	VH2 -0.85	TEC	TEH			1	HOT	600UL
97	37	0.52	85	P 2	TWD	23	VC3 +0.92	TEH	TEC			17	COLD	600UL
97	41	0.40	40	P 2	TWD	19	VH2 +0.92	TEH	TEC			17	COLD	600UL
97	47	0.34	92	P 2	TWD	15	VH2 +0.75	TEC	TEH			1	HOT	600UL
98	136	0.36	59	P 2	TWD	16	VH2 +0.82	TEH	TEC			23	COLD	600UL
		0.29	88	P 2	TWD	14	VH2 -0.76	TEH	TEC			23	COLD	600UL
100	26	0.36	103	P 2	TWD	17	VH2 +0.96	TEH	TEC			17	COLD	600UL
100	46	0.25	146	P 1	MCI		TSH +0.05	TSH	TSH	0.32	0.25	68	HOT	600PP
101	35	0.36	49	P 2	TWD	16	VH3 -0.69	TEH	TEC			18	COLD	600UL
101	143	0.44	67	P 2	TWD	19	VH2 -0.77	TEH	TEC			23	COLD	600UL
102	38	0.46	123	2	SAI		06H -0.59	06H	06H	0.29	0.62	131	HOT	580PP
102	58	0.26	115	P 2	TWD	11	VC3 -0.73	TEC	TEH			44	HOT	600UL
		0.29	155	P 2	TWD	11	VC2 -0.88	TEC	TEH			44	HOT	600UL
		0.22	55	P 2	TWD	10	VC3 -0.92	TSC	TEH			6	HOT	600UL
102	122	0.36	87	P 2	TWD	20	VC2 -0.80	TEC	TEH			7	HOT	600UL
102	132	0.40	81	P 2	TWD	18	VH2 -0.79	TEH	TEC			23	COLD	600UL
103	47	0.39	22	P 2	TWD	16	VH2 -0.91	TEC	TEH			2	HOT	600UL
103	137	0.46	108	P 2	TWD	20	VH3 -0.79	TEH	TEC			23	COLD	600UL

SG89 - MAI, MCI, MMI, MVI, SAI, SCI, SVI, 0-100%TWD

QUERY: QueryM1

ROW	LINE	VOLTS	DEG	CHN	IND	%TW	LOCATION			EXT	EXT	UTIL 1	UTIL 2	CAL #	LEG	PROBE
104	94	0.60	147	P 2	TWD	24	VSM	-0.78		TEH	TEC			9	COLD	600UL
106	40	0.18	112	2	MAI		06H	+3.14	TO+10.28	06H	06H	0.32	7.14	131	HOT	580PP
106	62	0.36	94	P 2	TWD	14	VC2	-0.88		TEC	TEH			6	HOT	600UL
106	84	0.29	125	P 2	TWD	13	VH3	+0.87		TEH	TEC			10	COLD	600UL
106	104	0.32	74	P 2	TWD	15	VC2	-0.75		TEH	TEC			46	COLD	600UL
106	136	0.41	118	P 2	TWD	18	VH2	-0.75		TEH	TEC			23	COLD	600UL
107	35	0.32	82	P 2	TWD	16	DBC	+1.81		TEH	TEC			17	COLD	600UL
107	103	0.49	38	P 2	TWD	21	VH2	-0.92		TEH	TEC			11	COLD	600UL
108	42	0.68	113	P 2	TWD	27	DBH	-1.85		TEH	TEC			17	COLD	600UL
		0.35	95	P 2	TWD	17	DBH	+2.00		TEH	TEC			17	COLD	600UL
109	47	0.32	111	P 2	TWD	15	VC3	-0.94		TEC	TEH			1	HOT	600UL
		0.37	122	P 2	TWD	16	VSM	-1.00		TEC	TEH			1	HOT	600UL
109	55	0.28	83	P 2	TWD	13	VH2	-0.82		TEC	TEH			1	HOT	600UL
109	95	0.24	105	P 2	TWD	11	VSM	+0.46		TEH	TEC			10	COLD	600UL
110	34	0.27	162	P 2	TWD	12	VH2	+0.94		TEH	TEC			18	COLD	600UL
110	36	0.10	81	2	SAI		07H	-11.50		07H	07H	0.13	0.62	131	HOT	580PP
111	43	0.57	51	P 2	TWD	22	VH3	-1.02		TEH	TEC			18	COLD	600UL
111	99	0.41	44	P 2	TWD	18	09C	+0.47		TEH	TEC			10	COLD	600UL
111	137	0.42	97	P 2	TWD	18	VH2	-0.77		TEH	TEC			23	COLD	600UL
		0.35	91	P 2	TWD	16	VH2	+0.87		TEH	TEC			23	COLD	600UL
112	72	0.36	64	P 2	TWD	17	VH3	+0.80		TEH	TEC			5	COLD	600UL
112	128	0.22	99	P 2	TWD	13	VH2	+0.08		TEC	TEH			7	HOT	600UL
112	144	0.55	60	P 2	TWD	22	DBC	+2.01		TEH	TEC			23	COLD	600UL
113	105	0.39	93	P 2	TWD	16	VH2	+0.87		TEH	TEC			12	COLD	600UL
		0.38	56	P 2	TWD	16	VH3	+0.91		TEH	TEC			12	COLD	600UL
114	36	0.26	34	P 2	TWD	13	DBC	-1.77		TEH	TEC			17	COLD	600UL
114	40	0.53	80	P 2	TWD	23	DBH	+2.13		TEH	TEC			17	COLD	600UL
114	46	0.19	109	2	SAI		07H	-0.44		07H	07H	0.21	0.30	131	HOT	580PP
114	62	0.31	137	P 2	TWD	12	DBH	-1.75		TEC	TEH			6	HOT	600UL
114	76	0.24	135	P 1	SCI		TSH	+0.02		TSH	TSH	0.30	0.48	100	HOT	600PP
114	136	0.34	146	P 2	TWD	16	VC3	+0.85		TEH	TEC			23	COLD	600UL
117	95	0.42	123	P 2	TWD	19	DBC	+0.80		TEH	TEC			9	COLD	600UL
118	70	0.41	98	P 2	TWD	17	VH1	-0.83		TEC	TEH			5	HOT	600UL
118	84	0.38	66	P 2	TWD	16	VC2	+0.53		TEH	TEC			10	COLD	600UL
118	128	0.28	112	P 2	TWD	12	05H	+0.67		TEC	TEH			8	HOT	600UL
119	79	0.53	123	P 2	TWD	22	VH3	+0.86		TEH	TEC			7	COLD	600UL
119	119	0.49	50	P 2	TWD	24	10H	-1.01		TEC	TEH	LOCOK		3	HOT	600UL
119	121	0.50	120	P 2	TWD	26	10H	-1.09		TEC	TEH	LOCOK		7	HOT	600UL
120	42	0.45	114	P 2	TWD	20	VH1	-0.81		TEH	TEC			17	COLD	600UL

SG89 - MAI, MCI, MMI, MVI, SAI, SCI, SVI, 0-100%TWD

QUERY: QueryM1

ROW	LINE	VOLTS	DEG	CHN	IND	%TW	LOCATION		EXT	EXT	UTIL 1	UTIL 2	CAL #	LEG	PROBE
120	60	0.46	140	P 2	TWD	19	VH1	-0.98	TEC	TEH			5	HOT	600UL
120	62	0.26	152	P 2	TWD	12	VH1	-0.96	TEC	TEH			5	HOT	600UL
120	68	0.39	101	P 2	TWD	16	VH1	-0.96	TEC	TEH			5	HOT	600UL
120	72	0.43	144	P 2	TWD	17	10H	-1.20	TEH	TEC			6	COLD	600UL
120	74	0.68	112	P 2	TWD	26	10H	-1.41	TEH	TEC	LAR		7	COLD	600UL
120	128	0.12	89	2	SAI		02H	-14.73	02H	02H	0.49	0.33	137	HOT	580PP
		0.35	82	P 2	TWD	20	08H	+0.79	TEC	TEH			7	HOT	600UL
		0.37	120	P 2	TWD	21	VH1	-1.00	TEC	TEH			7	HOT	600UL
121	39	0.33	76	P 2	TWD	16	10H	-1.82	TEH	TEC	LOCOK		17	COLD	600UL
121	45	0.74	120	P 2	TWD	28	VC2	-0.53	TEH	TEC	LAR		17	COLD	600UL
121	47	0.34	125	P 2	TWD	15	10H	+0.74	TEC	TEH			1	HOT	600UL
121	77	0.17	114	2	SAI		03H	+0.38	03H	03H	0.17	0.47	121	HOT	580PP
121	83	0.53	129	P 2	TWD	22	VC3	-0.82	TEH	TEC			8	COLD	600UL
121	109	0.57	82	P 2	TWD	26	10H	-2.03	TEC	TEH	LOCOK		3	HOT	600UL
122	40	0.24	16	P 2	TWD	12	02C	-0.17	TEH	TEC			17	COLD	600UL
122	42	0.57	97	P 2	TWD	22	DBC	-2.19	TEH	TEC			18	COLD	600UL
123	121	0.30	64	P 2	TWD	17	VH1	-0.98	TEC	TEH			7	HOT	600UL
124	48	0.55	103	P 2	TWD	22	VH1	-0.96	TEC	TEH			1	HOT	600UL
124	56	0.50	69	P 2	TWD	19	VH1	-0.98	TEC	TEH			6	HOT	600UL
125	53	0.37	138	P 2	TWD	16	VH1	-0.96	TEC	TEH			1	HOT	600UL
125	77	0.34	135	P 2	TWD	16	VH1	+0.86	TEH	TEC			8	COLD	600UL
		0.25	41	P 2	TWD	13	VH1	-0.81	TEH	TEC			8	COLD	600UL
126	48	0.40	111	P 2	TWD	16	VH1	-1.19	TEC	TEH			2	HOT	600UL
126	50	0.28	112	P 2	TWD	13	VH1	-1.12	TEC	TEH			1	HOT	600UL
126	56	0.49	88	P 2	TWD	20	VH1	-1.08	TEC	TEH			5	HOT	600UL
126	126	0.36	91	P 2	TWD	15	VH1	-1.24	TEC	TEH			8	HOT	600UL
127	123	0.31	140	P 2	TWD	18	09C	-1.18	TEC	TEH			7	HOT	600UL
128	72	0.25	148	P 2	TWD	11	10H	-1.05	TEH	TEC			6	COLD	600UL
		0.40	67	P 2	TWD	16	10H	+0.85	TEH	TEC			6	COLD	600UL
129	47	0.41	146	P 2	TWD	18	10H	+0.74	TEC	TEH			1	HOT	600UL
129	49	0.23	91	P 2	TWD	11	VH1	+0.86	TEC	TEH			1	HOT	600UL
		0.35	79	P 2	TWD	16	VH1	-0.84	TEC	TEH			1	HOT	600UL
129	73	0.22	47	P 2	TWD	11	DBH	+1.80	TEH	TEC			8	COLD	600UL
129	109	0.23	134	P 2	TWD	14	10H	-0.94	TEC	TEH			3	HOT	600UL
130	48	0.43	77	P 2	TWD	18	02C	-0.08	TEC	TEH			1	HOT	600UL
130	52	0.36	137	P 2	TWD	16	VH1	-0.90	TEC	TEH			1	HOT	600UL
130	54	0.45	128	P 2	TWD	18	VH1	-0.86	TEC	TEH			1	HOT	600UL
130	74	0.34	130	P 2	TWD	16	10H	+0.92	TEH	TEC			8	COLD	600UL
130	78	0.54	96	P 2	TWD	22	10H	-1.04	TEH	TEC			8	COLD	600UL
130	110	0.36	152	P 2	TWD	15	VH1	-0.85	TEC	TEH			4	HOT	600UL

SG89 - MAI, MCI, MMI, MVI, SAI, SCI, SVI, 0-100%TWD

QUERY: QueryM1

ROW	LINE	VOLTS	DEG	CHN	IND	%TW	LOCATION		EXT	EXT	UTIL	1 UTIL	2 CAL #	LEG	PROBE
130	116	0.46	74	P 2	TWD	19	VH1	-0.90	TEC	TEH			4	HOT	600UL
132	106	0.29	87	P 2	TWD	13	10H	-1.18	TEH	TEC			15	COLD	600UL
133	55	0.28	73	P 2	TWD	12	02H	+0.26	TEH	TEC	LAR		14	COLD	600UL
133	81	0.55	108	P 2	TWD	20	VH1	+0.85	TEH	TEC			14	COLD	600UL
133	85	0.40	108	P 2	TWD	16	06H	+0.83	TEH	TEC			14	COLD	600UL
133	119	0.42	149	P 2	TWD	19	VH1	+0.91	TEH	TEC			20	COLD	600UL
133	125	0.28	44	P 2	TWD	13	01C	+0.86	TEH	TEC			20	COLD	600UL
134	52	0.34	92	P 2	TWD	14	VH1	-0.77	TEH	TEC			14	COLD	600UL
134	64	0.39	130	P 2	TWD	16	VC3	-0.88	TEH	TEC			13	COLD	600UL
		0.37	98	P 2	TWD	16	VH3	-0.92	TEH	TEC			13	COLD	600UL
134	88	0.37	79	P 2	TWD	15	VH1	+0.84	TEH	TEC			14	COLD	600UL
134	124	0.22	75	P 2	TWD	13	VC3	+0.62	01C	TEH			76	HOT	600UL
136	68	0.52	60	P 2	TWD	21	VH1	-0.87	TEH	TEC			13	COLD	600UL
136	88	0.41	81	P 2	TWD	18	06H	+0.60	TEH	TEC			13	COLD	600UL
137	69	0.39	51	P 2	TWD	15	VH1	+0.59	TEH	TEC			14	COLD	600UL
137	71	0.38	120	P 2	TWD	15	DBH	-1.77	TEH	TEC			14	COLD	600UL
138	64	0.35	91	P 2	TWD	14	10H	+0.75	TEH	TEC			14	COLD	600UL
138	76	0.46	148	P 2	TWD	18	VH1	-0.81	TEH	TEC			14	COLD	600UL
138	92	0.54	77	P 2	TWD	20	07C	+1.19	TEH	TEC			14	COLD	600UL
138	104	0.30	108	P 2	TWD	14	VH1	+0.84	TEH	TEC			15	COLD	600UL
139	61	0.31	97	P 2	TWD	13	09C	-1.04	TEH	TEC			14	COLD	600UL
139	103	0.56	145	P 2	TWD	23	VH2	+0.91	TEH	TEC			15	COLD	600UL
140	100	0.27	145	P 2	TWD	11	VC1	+0.85	TEH	TEC			16	COLD	600UL
141	67	0.37	93	P 2	TWD	15	09C	-1.08	TEH	TEC			14	COLD	600UL
141	103	0.38	126	P 2	TWD	16	VH3	-0.93	TEH	TEC			16	COLD	600UL
141	109	0.53	89	P 2	TWD	22	VH3	-0.02	TEH	TEC			15	COLD	600UL
142	92	0.47	116	P 2	TWD	18	VH1	-0.89	TEH	TEC			14	COLD	600UL
143	71	0.57	108	P 2	TWD	21	VH1	-0.90	TEH	TEC			14	COLD	600UL
		0.45	93	P 2	TWD	17	VH1	+0.75	TEH	TEC			14	COLD	600UL
		0.48	65	P 2	TWD	18	DBH	+2.04	TEH	TEC			14	COLD	600UL
143	73	0.24	134	P 2	TWD	10	DBC	+1.81	TEH	TEC			14	COLD	600UL
		0.42	121	P 2	TWD	16	DBC	-1.81	TEH	TEC			14	COLD	600UL
143	81	0.29	17	P 2	TWD	12	VC1	-0.83	TEH	TEC			14	COLD	600UL
143	87	0.29	128	P 2	TWD	13	10C	+0.85	TEH	TEC			13	COLD	600UL
		0.54	74	P 2	TWD	22	DBC	+1.66	TEH	TEC			13	COLD	600UL
143	103	0.57	109	P 2	TWD	23	DBH	+1.58	TEH	TEC			15	COLD	600UL
143	109	0.75	76	P 2	TWD	26	DBC	-1.77	TEH	TEC			16	COLD	600UL
144	74	0.86	119	P 2	TWD	28	VC1	+0.94	TEH	TEC			14	COLD	600UL
		0.28	103	P 2	TWD	12	DBC	-1.77	TEH	TEC			14	COLD	600UL
144	102	0.29	115	P 2	TWD	12	DBH	-1.69	TEH	TEC			16	COLD	600UL
145	75	0.56	118	P 2	TWD	21	DBH	+1.99	TEH	TEC			14	COLD	600UL

SG89 - MAI, MCI, MMI, MVI, SAI, SCI, SVI, 0-100%TWD

QUERY: QueryM1

ROW	LINE	VOLTS	DEG	CHN	IND	%TW	LOCATION		EXT	EXT	UTIL 1	UTIL 2	CAL #	LEG	PROBE
145	81	0.84	93	P 2	TWD	29	VH1	+0.81	TEH	TEC			13	COLD	600UL
145	89	0.46	88	P 2	TWD	19	VC2	+0.88	TEH	TEC			13	COLD	600UL
145	91	1.14	97	P 2	TWD	33	DBC	+1.77	TEH	TEC			14	COLD	600UL
145	103	0.90	110	P 2	TWD	29	DBH	+1.81	TEH	TEC			16	COLD	600UL
146	78	0.46	81	P 2	TWD	18	DBH	+1.90	TEH	TEC			14	COLD	600UL
146	88	0.70	46	P 2	TWD	24	DBC	+1.65	TEH	TEC			14	COLD	600UL
146	92	0.94	116	P 2	TWD	29	DBC	+1.79	TEH	TEC			14	COLD	600UL
		0.29	128	P 2	TWD	13	DBH	+1.87	TEH	TEC			14	COLD	600UL
146	94	0.93	60	P 2	TWD	29	DBC	+1.76	TEH	TEC			14	COLD	600UL
		0.44	99	P 2	TWD	17	DBH	+1.98	TEH	TEC			14	COLD	600UL
146	98	0.44	55	P 2	TWD	18	03H	-1.17	TEH	TEC			16	COLD	600UL
147	81	1.26	80	P 2	TWD	34	DBC	+1.82	TEH	TEC			14	COLD	600UL

Total Tubes : 417
Total Records: 506