March 27, 1989

Docket No. 50-416

DISTRIBUTION
See attached sheet

Mr. W. T. Cottle
Vice President, Nuclear Operations
System Energy Resources, Inc.
Post Office Box 23054
Jackson, Mississippi 39205

Dear Mr. Cottle:

SUBJECT: ISSUANCE OF AMENDMENT NO. 59 TO FACILITY OPERATING LICENSE NO. NPF-29 - GRAND GULF NUCLEAR STATION, UNIT 1, REGARDING USE OF AN ALTERNATE DECAY HEAT REMOVAL SYSTEM (TAC NO. 69403)

The Nuclear Regulatory Commission has issued the enclosed Amendment No. to Facility Operating License No. NPF-29 for the Grand Gulf Nuclear Station, Unit 1. This amendment consists of changes to the Technical Specifications (TS) in response to your application dated September 23, 1988, as revised November 30, December 16 and 21, 1988 and, as supplemented February 6 and 23, March 6 and 8, 1989.

The amendment changes the Technical Specifications (TS) by adding a plant service water radiation monitor in TS 3/4.3.7.1, "Radiation Monitoring Instrumentation," and by adding two valves in TS 3/4.8.4.2, "Motor Operated Valves Thermal Overload Protection." These TS changes are made to allow the use, during cold shutdown and refueling, of an alternate decay heat removal system (ADHRS) to be installed during the third refueling outage. In addition, footnotes are added to TS 3.4.9.2, TS 3.9.11.1 and TS 3.9.11.2 to limit the use of the ADHRS to the third refueling outage.

For this outage, the licensee committed to implement administrative controls to clarify the operability requirements of systems which provide decay heat removal (including ADHRS), and for the automatic isolation of the reactor vessel in the event of inadvertent drainage of reactor coolant from the vessel and automatic injection of water into the reactor vessel by ECCS pumps. For the proposed long term use of the ADHRS, the licensee has committed to evaluate whether additional TS changes should be made and to submit its evaluation, together with necessary TS changes, to the NRC staff by October 2, 1989, for review and approval.

DF01
1/1

8904040302 890327
PDR ADOCK 05000416
P PNU

A copy of the Safety Evaluation is also enclosed. The Notice of Issuance will be included in the Commission's bi-weekly Federal Register notice.

Sincerely,

/S/

Lester L. Kintner, Senior Project Manager
Project Directorate II-1
Division of Reactor Projects I/II
Office of Nuclear Reactor Regulation

Enclosures:
1. Amendment No. 59 to NPF-29
2. Safety Evaluation

cc w/enclosures:
See next page

LA:PD21:DRPR	PM:PD21:DRPR	A:D:PD21:DRPR	OK on letter BC:EMEB
PAnderson	LKintner	EReeves	TMarsh
03/21/89	03/20/89	03/23/89	3/ /89

UNITED STATES
NUCLEAR REGULATORY COMMISSION
WASHINGTON, D. C. 20555

March 27, 1989

Docket No. 50-416

Mr. W. T. Cottle
Vice President, Nuclear Operations
System Energy Resources, Inc.
Post Office Box 23054
Jackson, Mississippi 39205

Dear Mr. Cottle:

SUBJECT: ISSUANCE OF AMENDMENT NO. 59 TO FACILITY OPERATING LICENSE NO. NPF-29 - GRAND GULF NUCLEAR STATION, UNIT 1, REGARDING USE OF AN ALTERNATE DECAY HEAT REMOVAL SYSTEM (TAC NO. 69403)

The Nuclear Regulatory Commission has issued the enclosed Amendment No. to Facility Operating License No. NPF-29 for the Grand Gulf Nuclear Station, Unit 1. This amendment consists of changes to the Technical Specifications (TS) in response to your application dated September 23, 1988, as revised November 30, December 16 and 21, 1988 and, as supplemented February 6 and 23, March 6 and 8, 1989.

The amendment changes the Technical Specifications (TS) by adding a plant service water radiation monitor in TS 3/4.3.7.1, "Radiation Monitoring Instrumentation," and by adding two valves in TS 3/4.8.4.2, "Motor Operated Valves Thermal Overload Protection." These TS changes are made to allow the use, during cold shutdown and refueling, of an alternate decay heat removal system (ADHRS) to be installed during the third refueling outage. In addition, footnotes are added to TS 3.4.9.2, TS 3.9.11.1 and TS 3.9.11.2 to limit the use of the ADHRS to the third refueling outage.

For this outage, the licensee committed to implement administrative controls to clarify the operability requirements of systems which provide decay heat removal (including ADHRS), and for the automatic isolation of the reactor vessel in the event of inadvertent drainage of reactor coolant from the vessel and automatic injection of water into the reactor vessel by ECCS pumps. For the proposed long term use of the ADHRS, the licensee has committed to evaluate whether additional TS changes should be made and to submit its evaluation, together with necessary TS changes, to the NRC staff by October 2, 1989, for review and approval.

A copy of the Safety Evaluation is also enclosed. The Notice of Issuance will be included in the Commission's bi-weekly Federal Register notice.

Sincerely,

L L Kintner

Lester L. Kintner, Senior Project Manager
Project Directorate II-1
Division of Reactor Projects I/II
Office of Nuclear Reactor Regulation

Enclosures:
1. Amendment No. 59 to NPF-29
2. Safety Evaluation

cc w/enclosures:
See next page

Mr. W. T. Cottle
System Energy Resources, Inc.

Grand Gulf Nuclear Station (GGNS)

cc:
Mr. T. H. Cloninger
Vice President, Nuclear Engineering
and Support
System Energy Resources, Inc.
P. O. Box 23054
Jackson, Mississippi 39205

Robert B. McGehee, Esquire
Wise, Carter, Child, Steen and
Caraway
P. O. Box 651
Jackson, Mississippi 39205

Nicholas S. Reynolds, Esquire
Bishop, Liberman, Cook, Purcell
and Reynolds
1400 L Street, N.W.
Washington, D.C. 20005-3502

Mr. Ralph T. Lally
Manager of Quality Assurance
Middle South Utilities System
Services, Inc.
639 Loyola Avenue, 3rd Floor
New Orleans, Louisiana 70113

Mr. John G. Cesare
Director, Nuclear Licensing
System Energy Resources, Inc.
P. O. Box 23054
Jackson, Mississippi 39205

Mr. C. B. Hogg, Project Manager
Bechtel Power Corporation
P. O. Box 2166
Houston, Texas 77252-2166

Mr. H. O. Christensen
Senior Resident Inspector
U.S. Nuclear Regulatory Commission
Route 2, Box 399
Port Gibson, Mississippi 39150

Mr. C. R. Hutchinson
GGNS General Manager
System Energy Resources, Inc.
Post Office Box 756
Port Gibson, Mississippi 39150

The Honorable William J. Guste, Jr.
Attorney General
Department of Justice
State of Louisiana
Baton Rouge, Louisiana 70804

Office of the Governor
State of Mississippi
Jackson, Mississippi 39201

Attorney General
Gartin Building
Jackson, Mississippi 39205

Mr. Jack McMillan, Director
Division of Solid Waste Management
Mississippi Department of Natural
Resources
Post Office Box 10385
Jackson, Mississippi 39209

Alton B. Cobb, M.D.
State Health Officer
State Board of Health
P.O. Box 1700
Jackson, Mississippi 39205

President
Claiborne County Board of Supervisors
Port Gibson, Mississippi 39150

Regional Administrator, Region II
U. S. Nuclear Regulatory Commission
101 Marietta Street
Suite 2900
Atlanta, Georgia 30323

AMENDMENT NO. TO FACILITY OPERATING LICENSE NO. NPF-29 - GRAND GULF

Distribution:

Docket File
NRC PDR
Local PDR
PDII-1 Reading
S. Varga (12/D/9)
G. Lainas (14/E/4)
E. Adensam (14/H/3)
P. Anderson
L. Kintner
OGC
D. Hagan (MNBB 3302)
E. Jordan (MNBB 3302)
B. Grimes (9/A/2)
T. Meeks (4) (P1-137)
W. Jones (P-130A)
E. Butcher (11/F/23)
M. Hodges (8/E/23)
J. Craig (8/D/1)
S. Newberry (7/E/12)
ACRS (10)
GPA/PA
ARM/LFMB
S. Sun
H. Shaw
E. J. Sullivan, Jr.
R. Lipinski
S. Chan
F. Litton
D. Notley
J. Lee
C. Hinson
O. Chopra
R. Jones
B. Marcus
C. Schulten

cc: Licensee/Applicant Service List

UNITED STATES
NUCLEAR REGULATORY COMMISSION
WASHINGTON, D. C. 20555

SYSTEMS ENERGY RESOURCES INC., ET AL.

DOCKET NO. 50-416

GRAND GULF NUCLEAR STATION, UNIT 1

AMENDMENT TO FACILITY OPERATING LICENSE

Amendment No. 59
License No. NPF-29

1. The Nuclear Regulatory Commission (the Commission) has found that

   A. The application for amendment by System Energy Resources, Inc., (the licensee), dated September 23, 1988, as revised November 30, December 16 and 21, 1988 and, as supplemented February 6 and 23, March 6 and 8, 1989, complies with the standards and requirements of the Atomic Energy Act of 1954, as amended (the Act), and the Commission's rules and regulations set forth in 10 CFR Chapter I;

   B. The facility will operate in conformity with the application, the provisions of the Act, and the rules and regulations of the Commission;

   C. There is reasonable assurance (i) that the activities authorized by this amendment can be conducted without endangering the health and safety of the public, and (ii) that such activities will be conducted in compliance with the Commission's regulations;

   D. The issuance of this amendment will not be inimical to the common defense and security or to the health and safety of the public; and

   E. The issuance of this amendment is in accordance with 10 CFR Part 51 of the Commission's regulations and all applicable requirements have been satisfied.

2. Accordingly, the license is amended by changes to the Technical Specifications, as indicated in the attachment to this license amendment; and paragraph 2.C.(2) of Facility Operating License No. NPF-29 is hereby amended to read as follows:

8904040310 890327
PDR ADOCK 05000416
P PNU

(2) Technical Specifications

The Technical Specifications contained in Appendix A and the Environmental Protection Plan contained in Appendix B, as revised through Amendment No. 59 , are hereby incorporated into this license. System Energy Resources, Inc. shall operate the facility in accordance with the Technical Specifications and the Environmental Protection Plan.

3. This license amendment is effective as of its date of issuance.

FOR THE NUCLEAR REGULATORY COMMISSION

/S/

Edward A. Reeves, Acting Director
Project Directorate II-1
Division of Reactor Projects I/II
Office of Nuclear Reactor Regulation

Attachment:
Changes to the Technical
Specifications

Date of Issuance: March 27, 1989

LA:PD21:DRPR	PM:PD21:DRPR	BC:SRXB:DEST	BC:SPLB:DEST	BC:SICB:DEST
PAnderson	LKintner:dlm	MHodges	JCraig	SNewberry
03/21/89	03/21/89	03/21/89	03/21/89	03/21/89
BC:OTSB:DOEA	OGC	D:PD21:DRPR	BC:EMEB	
EJButcher		EReeves	TMarsh	
03/22/89	03/23/89	03/23/89	3/22/89	

(2) Technical Specifications

The Technical Specifications contained in Appendix A and the Environmental Protection Plan contained in Appendix B, as revised through Amendment No. 59, are hereby incorporated into this license. System Energy Resources, Inc. shall operate the facility in accordance with the Technical Specifications and the Environmental Protection Plan.

3. This license amendment is effective as of its date of issuance.

FOR THE NUCLEAR REGULATORY COMMISSION

Edward A. Reeves

Edward A. Reeves, Acting Director
Project Directorate II-1
Division of Reactor Projects I/II
Office of Nuclear Reactor Regulation

Attachment:
Changes to the Technical
Specifications

Date of Issuance: March 27, 1989

ATTACHMENT TO LICENSE AMENDMENT NO. 59

FACILITY OPERATING LICENSE NO. NPF-29

DOCKET NO. 50-416

Replace the following pages of the Appendix "A" Technical Specifications with the attached pages. The revised pages are identified by Amendment number and contain vertical lines indicating the area of change.

Remove	Insert
3/4 3-59	3/4 3-59
3/4 3-60	3/4 3-60
3/4 3-62	3/4 3-62
3/4 8-48	3/4 8-48
3/4 4-27	3/4 4-27
3/4 9-18	3/4 9-18
3/4 9-19	3/4 9-19

TABLE 3.3.7.1-1

RADIATION MONITORING INSTRUMENTATION

INSTRUMENTATION	MINIMUM CHANNELS OPERABLE	APPLICABLE CONDITIONS	ALARM/TRIP SETPOINT	MEASUREMENT RANGE	ACTION
1. Component Cooling Water Radiation Monitor	1	At all times	$\leq 1 \times 10^5$ cpm/NA	10 to 10^6 cpm	70
2. Standby Service Water System Radiation Monitor	1/heat exchanger train	1, 2, 3, and*	$\leq 1 \times 10^5$ cpm/NA	10 to 10^6 cpm	70
3. Plant Service Water System Radiation Monitor	1	##	$\leq 1 \times 10^5$ cpm/NA	10 to 10^6 cpm	70
4. [DELETED]					
5. Carbon Bed Vault Radiation Monitor	1	1, 2	$\leq$ 2 x full power background/NA	1 to 10^6 mR/hr	72
6. Control Room Ventilation Radiation Monitor	2/trip system(h)	1,2,3,5 and**	$\leq$4 mR/hr/ $\leq$5 mR/hr#	10^{-2} to 10^2 mR/hr	73
7. Containment and Drywell Ventilation Exhaust Radiation Monitor	2/trip system(h)	At all times	$\leq$2.0 mR/hr/ $\leq$4 mR/hr(b)#	10^{-2} to 10^2 mR/hr	74
8. Fuel Handling Area Ventilation Exhaust Radiation Monitor	2/trip system(h)	1,2,3,5 and**	$\leq$ 2mR/hr/ $\leq$4 mR/hr(d)#	10^{-2} to 10^2 mR/hr	75
9. Fuel Handling Area Pool Sweep Exhaust Radiation Monitor	2/trip system(h)	(c)	$\leq$ 18 mR/hr/ $\leq$35 mR/hr(d)#	10^{-2} to 10^2 mR/hr	75

TABLE 3.3.7.1-1 (Continued)

RADIATION MONITORING INSTRUMENTATION

INSTRUMENTATION	MINIMUM CHANNELS OPERABLE	APPLICABLE CONDITIONS	ALARM/TRIP SETPOINT	MEASUREMENT RANGE	ACTION
10. Area Monitors					
a. Fuel Handling Area Monitors					
1) New Fuel Storage Vault	1	(e)	$\leq$2.5 mR/hr/NA	10^{-2} to 10^{3} mR/hr	72
2) Spent Fuel Storage Pool	1	(f)	$\leq$2.5 mR/hr/NA	10^{-2} to 10^{3} mR/hr	72
3) Dryer Storage Area	1	(g)	$\leq$2.5 mR/hr/NA	10^{-2} to 10^{3} mR/hr	72
b. Control Room Radiation Monitor	1	At all times	$\leq$0.5 mR/hr/NA	10^{-2} to 10^{3} mR/hr	72

* With RHR heat exchangers in operation.
** When irradiated fuel is being handled in the primary or secondary containment.
\# Initial setpoint. Final Setpoint to be determined during startup test program. Any required change to this setpoint shall be submitted to Commission within 90 days after test completion.
\#\# With ADHR heat exchangers in operation.
(a) Trips system with 2 channels upscale-Hi Hi Hi, or one channel upscale Hi Hi Hi and one channel downscale or 2 channels downscale.
(b) Isolates containment/drywell purge penetrations.
(c) With irradiated fuel in spent fuel storage pool.
(d) Also isolates the Auxiliary Building and Fuel Handling Area Ventilation Systems.
(e) With fuel in the new fuel storage vault.
(f) With fuel in the spent fuel storage pool.
(g) With fuel in the dryer storage area.
(h) Two upscale Hi Hi, one upscale Hi Hi and one downscale, or two downscale signals from the same trip system actuate the trip system and initiate isolation of the associated isolation valves.

TABLE 4.3.7.1-1
RADIATION MONITORING INSTRUMENTATION SURVEILLANCE REQUIREMENTS

INSTRUMENTATION	CHANNEL CHECK	CHANNEL FUNCTIONAL TEST	CHANNEL CALIBRATION	OPERATIONAL CONDITIONS FOR WHICH SURVEILLANCE REQUIRED
1. Component Cooling Water Radiation Monitor	S	M	A	At all times
2. Standby Service Water System Radiation Monitor	S	M	A	1, 2, 3, and*
3. Plant Service Water System Radiation Monitor	S	M	A	#
4. [DELETED]				
5. Carbon Bed Vault Radiation Monitor	S	M	A	1, 2
6. Control Room Ventilation Radiation Monitor	S	M(a)	A	1, 2, 3, 5 and**
7. Containment and Drywell Ventilation Exhaust Radiation Monitor	S	M	A	At all times
8. Fuel Handling Area Ventilation Radiation Monitor	S	M	A	1, 2, 3, 5 and**
9. Fuel Handling Area Pool Sweep Exhaust Radiation Monitor	S	M	A	(b)
10. Area Monitors				
a. Fuel Handling Area Monitors				
1) New Fuel Storage Vault	S	M	R	(c)
2) Spent Fuel Storage Pool	S	M	R	(d)
3) Dryer Storage Area	S	M	R	(e)
b. Control Room Radiation Monitor	S	M	R	At all times

* With RHR heat exchangers in operation.
** When irradiated fuel is being handled in the primary or secondary containment.
(a) The CHANNEL FUNCTIONAL TEST shall demonstrate that control room annunciation occurs if any of the following conditions exist.
1. Instrument indicates measured levels above the alarm/trip setpoint.
2. Circuit failure.
3. Instrument indicates a downscale failure.
4. Instrument controls not in Operate mode.
(b) With irradiated fuel in the spent fuel storage pool.
(c) With fuel in the new fuel storage vault.
(d) With fuel in the spent fuel storage pool.
(e) With fuel in the dryer storage area.
\# With ADHR heat exchangers in operation.

COLD SHUTDOWN

LIMITING CONDITION FOR OPERATION

3.4.9.2 Two[#] shutdown cooling mode loops of the residual heat removal (RHR) system shall be OPERABLE and, unless at least one recirculation pump is in operation, at least one shutdown cooling mode loop shall be in operation*,## with each loop consisting of at least:

a. One OPERABLE RHR pump, and

b. One OPERABLE RHR heat exchanger.

APPLICABILITY: OPERATIONAL CONDITION 4.

ACTION:

a. With less than the above required RHR shutdown cooling mode loops OPERABLE, within one hour and at least once per 24 hours thereafter, demonstrate the OPERABILITY of at least one alternate method*** capable of decay heat removal for each inoperable RHR shutdown cooling mode loop. The provisions of Specifiction 3.0.4 are not applicable for entry into OPERATIONAL CONDITION 4 from 5.**

b. With no RHR shutdown cooling mode loop in operation, within one hour establish reactor coolant circulation by an alternate method and monitor reactor coolant temperature and pressure at least once per hour.

SURVEILLANCE REQUIREMENTS

4.4.9.2 At least one shutdown cooling mode loop of the residual heat removal system or alternate method shall be determined to be in operation and circulating reactor coolant at least once per 12 hours.

[#]One RHR shutdown cooling mode loop may be inoperable for up to 2 hours for surveillance testing provided the other loop is OPERABLE and in operation.

*The shutdown cooling pump may be removed from operation for up to 2 hours per 8 hour period provided the other loop is OPERABLE.

##The shutdown cooling mode loop may be removed from operation during hydrostatic testing.

**This exception is applicable until startup from the third refueling outage.

***The alternate decay heat removal system (ADHRS) may be used as the alternate decay heat removal method for the third refueling outage only.

TABLE 3.8.4.2-1 (Continued)

MOTOR OPERATED VALVES THERMAL OVERLOAD PROTECTION

VALVE NUMBER	BYPASS DEVICE (CONTINUOUS) (ACCIDENT CONDITIONS) (NO)	SYSTEM(S) AFFECTED
Q1E12F074A	Continuous	RHR System
Q1E12F026A	Continuous	RHR System
Q1E12F082A	No	RHR System
Q1E12F082B	No	RHR System
Q1E12F290A	Continuous	RHR System
Q1E12F047A	Continuous	RHR System
Q1E12F027A	Continuous	RHR System
Q1E12F073A	Continuous	RHR System
Q1E12F346	Continuous	RHR System
Q1E12F024A	Continuous	RHR System
Q1E12F087A	Continuous	RHR System
Q1E12F048A	Continuous	RHR System
Q1E12F042A	Continuous	RHR System
Q1E12F004A	Continuous	RHR System
Q1E12F003A	Continuous	RHR System
Q1E12F011A	Continuous	RHR System
Q1E12F053A	Continuous	RHR System
Q1E12F037A	Continuous	RHR System
Q1E12F028A	Continuous	RHR System
Q1E12F064A	Continuous	RHR System
Q1E12F066A	Continuous	RHR System
Q1E12F290B	Continuous	RHR System
Q1E12F004C	Continuous	RHR System
Q1E12F021	Continuous	RHR System
Q1E12F064C	Continuous	RHR System
Q1E12F042C	Continuous	RHR System
Q1E12F048B	Continuous	RHR System
Q1E12F049	Continuous	RHR System
Q1E12F037B	Continuous	RHR System
Q1E12F053B	Continuous	RHR System
Q1E12F074B	Continuous	RHR System
Q1E12F042B	Continuous	RHR System
Q1E12F064B	Continuous	RHR System
Q1E12F096	Continuous	RHR System
Q1E12F094	Continuous	RHR System
Q1E12F006B	Continuous	RHR System
Q1E12F011B	Continuous	RHR System
Q1E12F052B	Continuous	RHR System
Q1E12F047B	Continuous	RHR System
Q1E12F027B	Continuous	RHR System
Q1E12F004B	Continuous	RHR System
Q1E12F087B	Continuous	RHR System
Q1E12F003B	Continuous	RHR System
Q1E12F026B	Continuous	RHR System
Q1E12F024B	Continuous	RHR System
Q1E12F028B	Continuous	RHR System
Q1E12F009	Continuous	RHR System
Q1E12F073B	Continuous	RHR System
Q1E12F066B	Continuous	RHR System

3/4.9.11 RESIDUAL HEAT REMOVAL AND COOLANT CIRCULATION

HIGH WATER LEVEL

LIMITING CONDITION FOR OPERATION

3.9.11.1 At least one shutdown cooling mode train of the residual heat removal (RHR) system shall be OPERABLE and in operation* with at least:

a. One OPERABLE RHR pump, and

b. One OPERABLE RHR heat exchanger train.

APPLICABILITY: OPERATIONAL CONDITION 5, when irradiated fuel is in the reactor vessel and the water level is greater than or equal to 22 feet 8 inches above the top of the reactor pressure vessel flange.

ACTION:

a. With no RHR shutdown cooling mode train OPERABLE, within one hour and at least once per 24 hours thereafter, demonstrate the OPERABILITY of at least one alternate method** capable of decay heat removal. Otherwise, suspend all operations involving an increase in the reactor decay heat load and establish SECONDARY CONTAINMENT INTEGRITY within 4 hours.

b. With no RHR shutdown cooling mode train in operation, within one hour establish reactor coolant circulation by an alternate method and monitor reactor coolant temperature at least once per hour.

c. The provisions of Specification 3.0.4 are not applicable.#

SURVEILLANCE REQUIREMENTS

4.9.11.1 At least one shutdown cooling mode train of the residual heat removal system or alternate method shall be verified to be in operation and circulating reactor coolant at least once per 12 hours.

---

*The shutdown cooling pump may be removed from operation for up to 2 hours per 8-hour period.

#This exception is applicable until startup from the second refueling outage.

**The alternate decay heat removal system (ADHRS) may be used as the alternate decay heat removal method for the third refueling outage only.

LOW WATER LEVEL

LIMITING CONDITION FOR OPERATION

3.9.11.2 Two shutdown cooling mode trains of the residual heat removal (RHR) system shall be OPERABLE and at least one train shall be in operation,* with each train consisting of at least:

a. One OPERABLE RHR pump, and

b. One OPERABLE RHR heat exchanger train.

APPLICABILITY: OPERATIONAL CONDITION 5, when irradiated fuel is in the reactor vessel and the water level is less than 22 feet 8 inches above the top of the reactor pressure vessel flange.

ACTION:

a. With less than the above required shutdown cooling mode trains of the RHR system OPERABLE, within one hour and at least once per 24 hours thereafter, demonstrate the OPERABILITY of at least one alternate method** capable of decay heat removal for each inoperable RHR shutdown cooling mode train.

b. With no RHR shutdown cooling mode train in operation, within one hour establish reactor coolant circulation by an alternate method and monitor reactor coolant temperature at least once per hour.

c. The provisions of Specification 3.0.4 are not applicable for entry into OPERATIONAL CONDITION 5 from 4 or lowering reactor cavity water level.#

SURVEILLANCE REQUIREMENTS

4.9.11.2 At least one shutdown cooling mode train of the residual heat removal system or alternate method shall be verified to be in operation and circulating reactor coolant at least once per 12 hours.

---

*The shutdown cooling pump may be removed from operation for up to 2 hours per 8-hour period.

#This exception is applicable until startup from the third refueling outage.

**The alternate decay heat removal system (ADHRS) may be used as the alternate decay heat removal method for the third refueling outage only.

UNITED STATES
NUCLEAR REGULATORY COMMISSION
WASHINGTON, D. C. 20555

SAFETY EVALUATION BY THE OFFICE OF NUCLEAR REACTOR REGULATION

SUPPORTING AMENDMENT NO. 59 TO FACILITY OPERATING LICENSE NO. NPF-29

SYSTEM ENERGY RESOURCES, INC., ET AL.

GRAND GULF NUCLEAR STATION, UNIT 1

DOCKET NO. 50-416

1.0 INTRODUCTION

By letter dated September 23, 1988, as revised November 30, December 16 and December 21, 1988 System Energy Resources, Inc. (the licensee), requested an amendment to Facility Operating License No. NPF-29 for the Grand Gulf Nuclear Station, Unit 1. The proposed amendment would change the Technical Specifications (TS) by adding the new plant service water radiation monitor in TS 3/4.3.7.1, "Radiation Monitoring Instrumentation," and adding two new valves in TS 3/4.8.4.2, "Motor Operated Valves Thermal Overload Protection." These new TS are proposed for an alternate decay heat removal system (ADHRS) to be installed for use during refueling outages when the residual heat removal (RHR) system is out of service for maintenance, inspection or repair. The proposed ADHRS would use plant service water (PSW) in the ADHRS heat exchangers to remove decay heat from reactor cooling water. The service water radiation monitor would detect heat exchanger tube leakage. The ADHRS would consist of two pumps and two heat exchangers in parallel with a common suction line connected to the existing RHR suction line and a common discharge line connected to one of the low pressure coolant injection (LPCI) lines. The two valves added to TS 3/4.8.4.2 would be used to isolate the ADHRS from the RHR and the LPCI lines during plant operation.

By letters dated February 6 and 23, March 3 and 6, 1989, the licensee provided additional information regarding the ADHRS design, their earlier safety analyses, and limitations on the ADHRS usage. The licensee described administrative controls and procedures for use of the ADHRS and committed to limit usage of the ADHRS to the third refueling outage (RF03) until an evaluation is made of the need for TS changes to govern the long term use of the ADHRS. A note was proposed to be added to TS 3.4.9.2, TS 3.9.11.1, and TS 3.9.11.2 to limit use of ADHRS to RF03.

The licensee's submittals dated February 6, and 23, March 6 and 8, 1989, which provide a restriction on the use of the ADHRS to the third refueling outage, an expanded safety analysis and clarification of the operability requirements for systems related to the use of the ADHRS, did not significantly alter the action previously noticed or affect the initial determination published in the Federal Register on February 1, 1989.

8904040318 890327
PDR ADOCK 05000416
P PNU

2.0 EVALUATION

The licensee has designed and is installing an ADHRS for use during Operational Condition (OC) 4, "Cold Shutdown," and OC 5, "Refueling," to supplement the decay heat removal capability of the RHR system. During each refueling outage, one or both loops of the RHR system are removed from service in order to perform surveillance, maintenance or repair on the loops or on supporting systems. The limiting conditions for operation (LCO) of the RHR system, during OC 4 and OC 5, are specified in TS 3.4.9.2, "Residual Heat Removal - Cold Shutdown", TS 3.9.11.1, "Residual Heat Removal and Coolant Circulation - Refueling Operations with High Water Level," and TS 3.9.11.2, "Residual Heat Removal and Coolant Circulation with Low Water Level." Each of these three TS has an Action statement which states, in part, that if the RHR loops required by the LCO are not operable, the licensee should "demonstrate the operability of at least one alternate method capable of decay heat removal." In the two previous refueling outages, the licensee used the reactor water cleanup (RWCU) system, the control rod drive (CRD) system, and the fuel pool cooling and cleanup (FPCCU) system as alternate methods capable of decay heat removal when an RHR loop was out of service. However, because of the small capacity of these systems, adequate heat removal capability is not available until about the twenty-sixth day after reactor shutdown. The ADHRS is designed to have adequate heat removal capacity at day one after reactor shutdown. The licensee estimates that the use of the ADHRS as the alternate method of decay heat removal will reduce the outage length about two weeks. Based on the use of ADHRS, for RF03 it is scheduled for 45 days. The second refueling outage was scheduled for two months.

During our review of the ADHRS, as summarized in the following sections of this Safety Evaluation, the staff expressed concerns that the present TS do not adequately limit the conditions for long term use of the ADHRS as a supplemental decay heat removal system. Unlike the RHR loops, the ADHRS is not a safety-related system, cannot be powered by an onsite diesel generator, and uses PSW as the cooling water for the heat exchangers. Voluntarily entering the action statement to perform RHR loop maintenance and surveillance for a short time using the less reliable methods for decay heat removal has been considered acceptable. However, the licensee's expressed purpose of using the ADHRS is to shorten the outage length. The ADHRS is designed to be used any time during the outage, without any time restrictions. During RF03, the licensee plans to use the ADHRS twelve days. In future outages, it could be used for a longer time.

In response to NRC staff concerns, the licensee committed to limit the use of ADHRS to RF03 and to provide administrative controls on requirements for its use. The licensee also committed to evaluate TS changes needed to implement these requirements for the long-term use of the ADHRS. Thus, for RF03 the licensee proposed to add a note to TS 3.4.9.2, TS 3.9.11.1 and TS 3.9.11.2 which would limit use of the ADHRS with the present TS to RF03.

We have reviewed the proposed ADHRS design and associated TS changes, the supporting analytical results and the licensee's responses to the our review questions. As a result of the review, we prepared the following evaluation based on the licensee proposals.

2.1 ADHRS Description

A flow diagram of the ADHRS is attached as Figure 1. The ADHRS consists of existing and new components. The existing components include the common RHR shutdown cooling suction line and fuel pool cooling and cleanup (FPCCU) piping. The new components include two ADHRS pumps, two heat exchangers, associated piping, valves, instrumentation and controls. A manually operated valve is added to isolate ADHRS from the FPCCU. In order to minimize the piping lengths, the new ADHRS equipment is located in RHR 'C' pump room. Functional control is provided from the main control room. The PSW system provides coolant to the ADHRS heat exchangers for heat removal. A radiation monitor with an alarm indicator in the control room is added to the PSW cooling water discharge header to detect intersystem leakage from a heat exchanger tube leakage or failure. Motor operators are added to valves E12F066A and B to allow the valves to be remote manually operated from the control room. The functional purpose of the ADHRS is important to safety, but is not safety related, since the ADHRS does not automatically mitigate the consequences resulting from accidents. However, safety-related components are used in various portions of the ADHRS to ensure that current safety-related requirements of the ECCS and RHR system are not compromised by the installation or use of the ADHRS.

The ADHRS is designed to operate in OC 4 (cold shutdown) and OC 5 (refueling). During operational conditions 1, 2, and 3, ADHRS is isolated by locked closed or deenergized valves from connected plant systems. The ADHRS can be operated in different modes as follows:

1. Suppression pool to suppression pool flush/test mode: From suppression pool (SP) suction line, the SP water is pumped through the ADHRS pumps, heat exchangers, flow control valve and back to the SP via the RHR 'C' full flow test return line. When ADHRS is operated in this mode, RHR 'C' loop will be declared inoperable.

2. Reactor vessel (decay heat) cooling mode via RHR A or B: Using the existing RHR shutdown cooling common suction line, reactor coolant is pumped from the reactor coolant 'B' recirculation loop through valves E12F006A and E12F066A (RHR A loop) or valves E12F006B and E12F066B (RHR B loop) to the ADHRS pumps, then to the heat exchangers and back to the reactor vessel via RHR C LPCI injection line.

3. Spent fuel pool to reactor vessel mode: Coolant is pumped from the spent fuel pool through valves F226 and F348 to the ADHRS heat exchangers and back to the reactor vessel through RHR 'C' LPCI injection line. Operation in this mode is applicable only to OC 5 when the upper reactor cavity is flooded. This mode provides an ADHRS shutdown cooling flow path and allows the RHR shutdown cooling suction line to be taken out of service for maintenance.

The design temperature of the ADHRS on the primary (reactor coolant) side is 200°F. This is the limiting TS temperature for OC 4. The rated flow on the primary side is 3600 gpm. A flow control valve, operated from the control room, allows a decrease in flow to a minimum of 1000 gpm. System performance is monitored in the main control room by using the existing LCPI "C" flow indication and new ADHRS heat exchanger inlet and outlet temperature indicators. When the reactor coolant recirculation pumps are in operation, the temperature of reactor coolant in the recirculation piping will also be used to monitor system performance. System status is monitored in the main control room by position indication of the ADHRS suction piping isolation valves E12F066A and E12F066B, by the flow control valve position, by the ADHRS pump running status lights, and the position indicators for existing motor operated valves in the ADHRS flow path.

2.2 Design Bases

Component and Piping Design

ADHRS components and piping on the tube (primary) side of the heat exchanger and the heat exchanger itself are designed and constructed according to the Class 3 requirements of Section III of the ASME Boiler and Pressure Vessel Code (Code) and Seismic Category I requirements. Piping on the shell (secondary) side of the heat exchanger are designed and constructed according to the ANSI B31.1 rules to withstand safe shutdown earthquake (SSE) loads.

During OC 1, 2 and 3, isolation valves in the cooling water supply to the heat exchangers are closed to eliminate interaction with the standby service water (SSW) system. During OC 4 and 5, if there is a loss of offsite power, the ADHRS heat exchangers together with other components receive standby service water automatically since the ADHRS cooling water piping is connected to the SSW B loop header. The licensee has evaluated the effect of ADHRS on reducing SSW flow to essential components and concluded that the effect was insignificant. In any case, the ADHRS heat exchangers can be isolated from the SSW header if additional flow to essential components is required.

Design pressure of the ADHRS suction piping is 80 psig. This piping is attached to FPCCU piping which is also designed for 80 psig. The ADHRS suction piping is isolated from the FPCCU piping by ASME Class 3 valve E12F410. This valve is manually operated and closed during OC 1, 2 and 3. The ADHRS suction piping is isolated from the RHR suction piping by valves E12F066 A and B which are motor-operated valves. During OC 1, 2 and 3, the valves are closed and the power to these valves is removed. During OC 4, when ADHRS is operating, if the decay heat removal function is lost, these valves will be closed by operators using site procedures to prevent over-pressurization of the ADHRS. With no shutdown cooling loop in operation the TS require monitoring of the reactor coolant temperature and pressure once per hour. Design pressure of the discharge piping upstream of the flow control valve and check valve is 250 psig. The design pressure of the flow control valve, check valve and associated piping

connected to the LPCI "C" injection line is 500 psig. The check valve serves as the isolation valve, between the 500 psig ECCS injection line and the 250 psig ADHRS discharge piping. This check valve will be periodically leakage tested to ensure that the ADHRS discharge piping will not be over-pressurized from operation of the LPCI "C" system.

Based on our review of the submittals, we conclude that the mechanical design of the ADHRS piping and components is acceptable.

Pipe Support Design

We reviewed the adequacy of the pipe supports to assure that the methodology used in the design is consistent with the appropriate codes and in conformance with the regulatory requirements.

In order to perform the task, we visited the plant, audited the calculations and met with the licensee to discuss the technical aspects of the design. The pipe supports were designed in accordance with the design specifications and consistent with the American Institute of Steel Construction (AISC) Code, Seventh Edition, using the computer code STRUDL II CE-901 and P-Delta STRUDL, Version 0787. These computer programs have been used previously and have been accepted by the NRC staff. The base plate design was not included in this review because it was previously accepted by our staff in a review of the licensee's response to IE Bulletin 79-02.

On January 4 and 5, 1989, members of the NRC staff visited the plant to review the calculations for pipe supports pertaining to the ADHRS. The visit included a tour of the portion of the facility where the ADHRS is located. During the review we noted that: (1) not all of the shear components in members subjected to torsional loads were accounted for, and (2) that the prying action was not explicitly considered in the calculations.

In view of the above, we requested that the licensee perform the following:

(1) Identify the supports where torsional loads contribute to the stresses in structural members,

(2) Determine that the stresses in those sections are within the code allowables and that the effects of torsional loads are properly accounted for, and

(3) Provide results of the survey and the quantitative results of the analysis to the NRC staff.

The licensee provided a summary of stresses in ADHRS pipe supports. The submittal contained the following for each affected pipe support: (1) the maximum shear stress and (2) the maximum flexure stress or the result of combination of bending and axial stresses that would be obtained from an interaction equation, where applicable.

Review of that submittal indicates that all stresses are below those permitted by the AISC Code (0.4 Fy for shear and 0.6 Fy for tension where Fy is the yield stress at the design temperature). Since the actual stresses are within the Code allowables, the stresses in the pipe supports are acceptable.

Furthermore, during a meeting we held with the licensee on February 14, 1989, the licensee presented information supporting the methodology used to design the ADHRS pipe supports. As a result of this presentation, the licensee then documented the technical basis for the conclusion that the pipe support design methodology used is conservative. The submittal consisted of a discussion comparing the licensee's simplified St. Venant approach with the more rigorous method described in the AISC publications entitled, "Torsional Analysis of Steel Members," dated 1983. From this comparison, the licensee concluded, and the staff agrees, that the approximate method envelopes the AISC method with a large margin and is, therefore, acceptable. With regard to prying action in the design of bolted connections, the licensee indicated that there are no steel-to-steel bolted connections in the ADHRS design of pipe supports. All connections are made by welds; therefore, prying action is not a concern. The staff agrees with the statement that prying action is not a concern for welded connections.

On the basis of the review of the licensee's calculations pertaining to the design of the ADHRS pipe supports, the discussions during the meetings with licensee and his consultants and reviews of the documents pertinent to the subject matter, we conclude that the design of the ADHRS pipe supports is acceptable.

Structural Design

External events of high winds, flooding and earthquakes were considered in the staff's review. With respect to high winds, tornadoes, tornado missiles, and flooding, components of the ADHRS are completely housed inside the existing auxiliary building, a safety-related structure designed in accordance with commitments in UFSAR Sections 3.3, 3.4 and 3.5. Thus, the ADHRS is well protected against these adverse events.

With respect to seismic events, the response spectra method has been utilized to calculate dynamic responses. All modal frequencies in the range of 0.25 to 33 hertz are considered in the seismic analysis. Damping ratios used are consistent with Regulatory Guide 1.61. Load combinations used are in accordance with the commitments of the UFSAR. This method of analysis for the ADHRS is, therefore, acceptable. The response spectra employed as the seismic design base motion for the ADHRS were developed by first applying a ground time history of the auxiliary building model.

The criteria of Regulatory Guides 1.61 and 1.122 were then utilized to develop the floor spectra, as described in UFSAR Section 3.7.2.5. We reviewed the individual floor response spectra for all applicable building elevations, seismic events and damping including those of Elevation 93'-0" of the auxiliary building where the ADHRS is supported. Those response spectra are acceptable. Our major concern of the ADHRS is that it would not impact or impose excessive loads on the existing auxiliary building and would not increase stresses beyond the code allowable limits. The licensee calculated the ADHRS "foot print" reaction loads at each of the system supports from the response spectrum analysis, and applied these reaction loads to the auxiliary building for the structural evaluation. Evaluations thus conducted were to ensure that stresses in the structure were within the allowable limits established in the UFSAR sections, which identify the applicable codes, load combinations and allowable stresses. As a result of this evaluation, we found that the structural integrity of the auxiliary building due to loads imposed by the ADHRS is not impaired. The major ADHRS components are located on the building basemat at Elevation 93' so there is no appreciable effect on structural seismic response. Loads imposed by the ADHRS design on walls, beams or other structural elements are acceptable.

Based on this evaluation, we conclude that the method of seismic structural analysis for the ADHRS, as well as the procedures to obtain response spectra for the base motion, are reasonable and acceptable. The installation and use of the ADHRS will cause no adverse interactions with the existing auxiliary building which completely houses and supports the components of the ADHRS.

Materials Design

The ADHRS is designed to operate at a temperature of 200°F and a discharge pressure of 250 psig. The materials proposed for the ADHRS are compatible with interfacing materials used at GGNS. The ADHRS is designated as a moderate energy, ASME Code Class 3 system, operating only in operational conditions for reactor cold shutdown and refueling. Repairs and replacements at GGNS are to be fabricated and installed in compliance to the requirements of Section XI of the ASME Boiler and Pressure Vessel Code, 1977 Edition, including Summer 1979 Addenda. This Code requires that repairs and replacements meet the requirement of the Construction Code to which the original component or part was constructed. The licensee stated that the components and parts of the ADHRS are constructed in compliance to Section III of the ASME Boiler and Pressure Vessel Code, edition and addenda as shown in Table 1 of the licensee's submittal of November 30, 1988.

The Inservice Inspection (ISI) Program for the first ten-year interval at GGNS (July 1, 1985 to July 1, 1995) was approved by the Commission on May 2, 1986. The ISI program is based on the requirements of the 1977 Edition, Summer 1979 Addenda, of Section XI of the ASME Boiler and Pressure Vessel Code. After the construction of the ADHRS is completed, a preservice inspection will be conducted. Then the ISI Program will be modified to include the Class 3 components of the ADHRS.

When secured during non-outage periods, the ADHRS will be filled with demineralized water. The system will be flushed prior to use to assure an initially clean system. During its operation the ADHRS would not introduce materials that could adversely interact with the reactor system.

Therefore, we conclude from our review that the ADHRS is acceptably fabricated, constructed and inspected in conformance with appropriate regulations. Future ISI surveillance as noted above, is also acceptable.

Motor Operators for ADHRS Isolation Valves

As part of the implementation of ADHRS, class 1E motor operators were added to currently manual valves E12F066A and B to allow these valves to be remote manually controlled from the control room. Valves E12F066A and B are presently used to provide a suction path from the spent fuel pool to the RHR pumps for operation in the spent fuel assist mode of RHR. With the installation of the ADHRS, valves E12F066A and B will also be used to provide a suction path for ADHRS operation during OC 4 and 5. During OC 1, 2 and 3, the valves will be closed and power to these valves will be locked out at the motor control center. Valve position indication is provided in the control room.

Valves E12F066A and B are powered from the Class 1E buses. The motor operator for these valves are rated at 4kW each. The thermal overload devices provided for the motor operators of these valves will be bypassed for routine operation. The thermal overload devices will provide motor protection only when the valve motor operators are undergoing periodic testing. This is consistent with Regulatory Guide 1.106 C.11(a).

The TS change proposed by the licensee as a result of new ADHRS adds thermal overload devices for valves E12F066A and B to the TS Table 3.8.4.2-1.

Based on these considerations, the design of the motor operators on ADHRS valves E12F066A and B and the proposed TS change addressing the addition of the thermal overload devices to TS Table 3.8.4.2-1 are acceptable.

Instrumentation and Control Design

The ADHRS design is primarily nonsafety-related, but includes both Class 1E and Non-Class 1E circuitry. The design adheres to licensing basis commitments such as applicable Regulatory Guide 1.75 requirements. Conformance with these design requirements provides assurance that the electrical controls and circuits added by the ADHRS will not adversely effect the performance of safety-related systems.

In addition, the licensee performed an ADHRS interaction evaluation to assess the acceptability of new electrical control interactions introduced by ADHRS. This evaluation considered potential interactions during both normal plant operation (when ADHRS is isolated) and OC 4 and 5 (when ADHRS may be operating). Licensing basis assumptions and events were considered including single active failures and operator errors. No credit was taken

for Non-Class 1E circuitry. The ADHRS electrical control interaction evaluation confirmed that the ADHRS introduces no new interactions which could adversely affect the performance of safety-related systems.

A modification of the RHR A and B pump permissive logic was made to ensure that the RHR A or B pump does not inadvertently start when either valve E12F066A or E12F066B is open and no suction path exists. This condition only occurs during OC 4 and 5 when the ADHRS is operating. In this situation, remote manual valve realignment from the control room to establish pump suction would allow the associated RHR pump to be started. Two Class 1E RHR pump bypass control switches, one for RHR A and one for RHR B, have been added in the control room as part of this change. An assessment of the acceptability of the interaction of these new switches with the existing pump interlocks was documented in the ADHRS interaction evaluation submitted by the licensee. We reviewed that analysis.

A safety-related interlock was added to prevent the RHR C pump from starting when its suction valve is closed during ADHRS operation. Stopping the ADHRS and a manual realignment to establish pump suction would allow the pump to be started.

The ADHRS instrumentation and associated controls are nonsafety-related. However, the currently installed instrumentation will be used to monitor and control decay heat removal.

We reviewed the licensee's submittals and agree that the instrumentation added, as part of the ADHRS modification, does not adversely affect or interfere with the installed Class 1E instrumentation of the RHR system and is, therefore, acceptable. The RHR A and B pump permissive logic modification and the RHR C pump interlock do not prevent the use of these pumps for ECCS injection when manually realigned. On this basis, the ADHRS electrical control modification is acceptable.

Fire Protection Design

The ADHRS will not increase the combustible loading in those areas where it will be located beyond that already assumed in the Fire Hazard Analysis. Existing fire detectors and suppression capability are adequate for the proposed ADHRS. No changes or additions were needed to these systems. Installation of the ADHRS will not affect the integrity of fire barriers or penetration seals. Therefore, the proposed ADHRS is acceptable with respect to fire protection.

Radiation Protection Design

Areas outside of the RHR C and low pressure core spray (LPCS) pump rooms where the ADHRS piping will be routed are currently designated as zone B (0.5-2.5 mr/hr) areas. In order to ensure that the existing radiation zones in these areas are not exceeded following installation of the ADHRS system, the licensee added lead wrap shielding to the ADHRS piping in these areas to allow continued general access. The licensee has performed a 10 CFR 50.59 evaluation of this additional shielding as recommended by

Information Notice No. 83-64, "Lead Shielding Attached to Safety-Related Systems Without 10 CFR 50.59 Evaluations." In order to minimize operator exposure during valve operation, the licensee has added two valve motor operators to the ADHRS which will allow the valves to be remotely operated from the control room.

ADHRS equipment and piping inside the RHR C and LPCS pump room are not shielded. Radiation levels in these rooms will increase to 56.6 mr/hr (zone D) during the first day of ADHRS operation (24 hours after shutdown), and decline to zone C (2.5-15 mr/hr) levels within 7 days and zone B (0.5 -2.5 mr/hr) levels after the reactor cavity/upper containment pool is flooded and the reactor coolant is diluted. The existing radiation zone designation for these rooms is zone B. Normal administrative controls for access to the RHR rooms will be in effect during ADHRS operation. Issuance of a radiation work permit may or may not be required depending on reason for entry and estimated occupancy time. These rooms are surveyed by health physics personnel at least weekly and prior to entries into the rooms when conditions are changing (e.g., when ADHRS is being placed into operation).

The licensee has estimated that the additional integrated dose over 40 years from operation of the ADHRS will be about 225 rads. This additional dose supplement is inconsequential when added to the current integrated dose (normal plus accident) of about 5×10^4 rads. The licensee has estimated that the addition of the ADHRS will have no adverse impact on the environmental qualification of equipment in the rooms where the new equipment will be located.

The total estimated dose for installation of the ADHRS is approximately 81 man-rems. The GGNS ALARA committee has reviewed the work package in detail and has implemented changes to reduce total personnel dosage. This committee will closely monitor the work progress during ADHRS installation to ensure that the total man-rem received during installation of the system will be minimized. The licensee's estimate of 81 man-rem to install the ADHRS and the GGNS ALARA committee's efforts to minimize this dose are acceptable.

Since the ADHRS is not designed for post-accident operation, the licensee has not addressed post-accident shielding and dose effects.

Based on our review of the licensee's submittals, the radiation protection design features used to minimize personnel doses are consistent with the guidelines in Regulatory Guide 8.8 and are acceptable.

Radiation Monitor for Plant Service Water

The function of this radiation monitor is to detect intersystem leakage of reactor coolant into the plant service water system that supplies cooling water to the ADHRS heat exchangers. The radiation monitor is not safety-related. It neither performs an accident mitigation function, nor is it required for safe shutdown of the plant. This monitor is intended for information only. The monitor consists of a single channel gamma

scintillation detector, high radiation alarms in the main control room, and a local sample point. The monitor has three trip circuits: two upscale (high-high and high) and one downscale (low). Each trip is visually displayed on the radiation monitor. Each of the trips actuates corresponding control room annunciators.

The design and operation of the monitor are identical to existing radiation monitors provided in the component cooling water system and the standby service water system. In addition, the monitor meets the acceptance criteria provided in the NRC Standard Review Plan, Section 11.5. Therefore, the design of the radiation monitor is acceptable.

2.3 Operation of the ADHRS

With the design coolant flow rate of 3600 gpm, the ADHRS is capable of removing decay heat from the reactor coolant starting one day after reactor shutdown to maintain reactor coolant temperature of 184°F. Calculations by the licensee also indicate that a temperature of 200°F (the TS temperature limit in OC 4) can be maintained with a flow rate of 2600 gpm. The ADHRS is designed to operate at a lower flow rate of 1000 gpm by using a flow control valve.

Operating procedures will be implemented to preclude operation of ADHRS at flow rates less than that which would allow reactor coolant temperature to exceed TS limiting temperatures. In addition, the RHR shutdown cooling TS require that systems such as ADHRS, which are to be used as an "alternate method capable of decay heat removal" must have their operability demonstrated prior to use and periodically thereafter.

The ADHRS could be used during cold shutdown (OC 4) and refueling (OC 5) for shutdown cooling to supplement the residual heat removal function of the RHR system. The proposed use of the ADHRS together with the use of the RHR loops for shutdown cooling (SDC), the use of ECCS systems for water injection and associated diesel generators (DG) are shown for RF03 in Figure 2 (attached). Plant operational conditions (labeled MODE in Figure 2) are shown in Item I. TS LCO requirements for shutdown cooling loops (TS 3.4.9.2, TS 3.9.11.1, TS 3.9.11.2), ECCS subsystems (TS 3.5.2), and diesel generators (TS 3.8.1.2) are indicated in Item II of Figure 2. The scheduled ECCS subsystems, RHR loops, ADHRS and DGs are indicated in Item III of Figure 2.

When the plant is in OC 4 or OC 5 with a low reactor cavity water level (LVL), the TS require two operable ECCS subsystems, two operable RHR shutdown cooling loops, and two operable DGs. One DG is required in DIV III, which is capable of powering only the HPCS. The other required DG is capable of powering one of the two required RHR shutdown cooling loops and some of the ECCS subsystems. DIV I can power LPCS, LPCI A and RHR A. DIV II can power LPCI B and C and RHR B and C. If the DG powering the shutdown cooling loop fails with a loss of offsite power, the HPCS and its associated DIV III DG can be used for cooling the core until power is restored. This occurs by injecting water into the reactor vessel and discharging water to the suppression pool.

Thus, for example, in the first two days of the outage (See Figure 2) while in OC 4 with the reactor pressure vessel head on, HPCS can be powered by DIV III DG and the alternate shutdown cooling loop RHR B can be powered by DIV II DG (indicated by an asterisk in Figure 2). The other two loops, LPCS and RHR A can only be powered by offsite power during this portion of the outage because the DIV I DG is undergoing maintenance. The ADHRS is designed for operation on offsite power only. In Item III of Figure 2, the RHR (SDC) line shows which RHR loops are operable. The Alternate (SDC) line shows the RHR loops that are not operable, but will be used as the "alternate method capable of decay heat removal" allowed in Action a of TS 3.4.9.2, TS 3.9.11.1 and TS 3.9.11.2, when an RHR train is not operable.

The new ADHRS would also be used as an alternate method capable of decay heat removal in accordance with these specifications. Since the ADHRS cannot be powered by a DG its use as an alternate SDC system either (1) would be limited to replacement of an RHR loop also powered by offsite power or (2) would be backed up by an RHR loop capable of being powered by its associated DG. As shown in Figure 2, the first condition is met for days 17 to 28 of the outage because RHR A loop, powered by DIV I is operable. The second condition is met for days 13 to 15 of the outage because ADHRS is backed up by RHR A loop. The backup RHR A loop would be inoperable because it would be lined up to take suction from the spent fuel pool rather than from the reactor. However, it would be capable of keeping reactor coolant temperature within TS limits in the event of the loss of offsite power. The implementation of these requirements is included in GGNS administrative procedures. TS are discussed in Section 2.5.

The licensee performed an analysis of the effect of the ADHRS design and operation on the operation of safety-related systems in OC 1, 2 and 3 and on the operation of RHR loops and ECCS subsystems in OC 4 and 5.

As discussed in Section 2.2, the ADHRS will be isolated on the reactor coolant side and on the plant service water side during OC 1, 2 and 3. The motor operated isolation valves will have power removed from the operators. The interlock on the RHR C pump start and the start permissive on RHR A and RHR B pumps would be in effect with the valves associated with these circuits positioned to allow pump starts. A failure of the circuit may cause one of the pumps to fail to start when an actuation signal is received, but this is within the bounds of the single failure criterion used in the FSAR safety analysis and is, therefore, acceptable.

In OC 4 and 5, more interactions are potentially possible between the ADHRS and the safety-related RHR shutdown cooling loops and ECCS subsystems. As shown in Figure 1, the ADHRS suction is connected to the fuel pool cooling and cleanup line which is joined to the RHR A, B and C loop suction piping. This results in the need for additional procedural controls and constraints to assure continued shutdown cooling and ECCS injection when the ADHRS is being operated.

The licensee has performed an analysis of the interaction of the ADHRS design and operation with the existing plant systems to ensure that

potential adverse affects would be minimized. Appropriate procedural controls and restraints are included as a part of the operating instructions. The analysis included a review of events and ADHRS operating modes. The events included inadvertent draining of the reactor vessel and loss of shutdown cooling. For the reactor vessel draining events, the ability of the assumed operable ECCS subsystems to deliver flow to the reactor vessel in accordance with OC 4 and 5 requirements were examined. Criteria included maintenance of keep-fill and minimum flow functions, maintenance of the ASME Class 2 boundary of the ECCS flow path, avoidance of pump excess flow or pump net positive suction head concerns and, avoidance of overpressurization of the ADHRS. Single failures and operator errors were examined for their effects. The interconnected systems examined for compatibility and continued operability included the RHR system (for shutdown cooling, and water injection modes), and the fuel pool cooling and cleanup system (for cooling and shielding, and LPCS modes) and the nuclear boiler system (for temperature control, coolant circulation, shielding and coolant inventory).

As a result of this interaction analysis, the licensee identified procedural controls necessary for acceptable operation of ADHRS and RHR in shutdown cooling and water injection modes. Some of the more significant requirements are:

1. ADHRS should be stopped and manually isolated if loss of shutdown cooling occurs during OC 4 when the reactor pressure vessel head is on. This would prevent overpressurization of the ADHRS.

2. ADHRS should be isolated on the primary and secondary sides during OC 1, 2 or 3.

3. Simultaneous operation of the ADHRS and RHR loops A & B for shutdown cooling should be precluded for certain alignments of these systems.

4. Simultaneous operation of ADHRS and LPCI C water injection should be precluded.

5. Adequate time should be available to realign valves and to start shutdown cooling subsystems (ADHRS, RHR A or RHR B) in the event the operating shutdown cooling train is lost or an inadvertent drainage of the reactor pressure vessel occurs

During our review of the licensee's submittals, several other areas were considered which impact operation of safety-related systems as follows:

1. The jockey pumps which keep the discharge lines of LPCI A, B and C pumps filled must be turned off when ADHRS is operating, because a valve upstream of the suction to the jockey pumps must be closed. The licensee states that the ADHRS will keep the lines filled. However, the keep-fill low pressure alarm on the LPCI A is expected to come on, thus making LPCI A inoperable as the reactor cavity water level is drained. Also, because the jockey pumps are off, one channel of the suppression pool water level instrumentation is

expected to be inoperable (TS 3.5.3 Action C). These interactions were reviewed by the NRC staff and are acceptable for RFO 3 as described in the safety evaluation for Amendment No. 58, issued March 16, 1989. However, for the long term the licensee committed to determine actions necessary to prevent these adverse interactions.

2. Some TS (e.g., TS 3.7.1.1 Action A.2) applicable to OC 3 (hot shutdown) require the operator to "maintain reactor coolant temperature as low as practical by use of alternate heat removal methods." If the ADHRS is used for this purpose in OC 3, the ADHRS may be overpressurized. RHR suction piping valves are interlocked at 135 psig pressure. However, the ADHRS system suction piping is designed for 80 psig. The licensee will add a caution in its Off Normal Event Procedure 05-1-01-III-1 stating that the ADHRS should not be used for this purpose. We conclude that the use of a caution in GGNS procedures is acceptable for RF03. However, prior to subsequent use of the ADHRS we consider that the TS should be changed to preclude the use of the ADHRS in OC 1, 2 or 3.

To address these concerns about how the above conditions will be implemented in plant procedures and administrative controls, and how operators will be trained to use the ADHRS, the licensee responded that ADHRS procedural controls will be incorporated into existing procedures (System Operating Instruction 04-1-01-E12-1 "Residual Heat Removal System - Safety-Related," and Off Normal Event Procedure 05-1-01-III-1 "Inadequate Decay Heat Removal"). Operators will be trained in the use of the ADHRS during qualification training prior to start of RF03.

Also during the course of our review, we expressed concerns about the adequacy of the operator response time to prevent inadequate core cooling (core uncovery) for cases with: (a) inadvertent RCS drainage, and (b) loss of heat removal capability. In response, the licensee committed to implement administrative controls in the form of Technical Specification Position Statements* to require at least one of the valves (E12F008 and E12F009 which isolate the RCS from the decay heat removal system) to be automatically isolated on a Level 3 (L3) reactor water level signal during any activity with a potential for draining the reactor vessel. With the implementation of the TSPS, the licensee concluded, and we agree, that an operator time of about 25 minutes is adequate to manually place a low pressure ECCS pump in service to maintain the core covered with water. This is supported by the UFSAR Section 5.4.7.2.7 analysis which assumes

---

*Technical Specification Position Statements (TSPS) are operating limitations and requirements in the Plant Operations Manual, Administrative Procedure 01-S-15-2 "Plant Staff Handling of Plant Licensing Activities - Safety-Related. These TSPS, in part, provide requirements that are more conservative than TS and are placed in effect until TS changes can be proposed and reviewed by the NRC.

automatic isolation of valves E12F008 and E12F009 on L3 water level. The TSPS will also require that, when possible, both valves will be made capable of automatic actuation. In addition, the licensee committed to require at least one of the two operable ECCS subsystems to be capable of automatically injecting water upon receipt of a low reactor vessel water level signal. The acceptability of an operator response time of 25 minutes is based on the licensee's calculation. The licensee calculated that the maximum heatup rate is about 53°F/hr in the event of loss of all heat removal systems. The calculation is based on: (1) the design decay power for the ADHRS (decay power at 24 hours following reactor shutdown), (2) the reactor vessel water level is one foot below the top of the vessel flange, and (3) the initial reactor coolant temperature is 185°F. The licensee concluded that the resulting operator response time of 25 minutes is adequate to prevent the water from reaching 212°F for the worst case loss of cooling event which may occur during OC 5 with the maximum operating temperature of 140°F. GGNS Unit 1 "Off Normal Event Procedure 05-1-01-III-1" includes conservative time-to-boil curves which will be used to determine the acceptability of manual actions required to place backup shutdown cooling loops and ECCS subsystems into operation.

Based on our review, we conclude that with the appropriate procedures incorporating the procedural requirements discussed in this section and with adequate operator training, as committed by the licensee, the ADHRS is acceptable as an alternate method for decay heat removal during RF03.

2.4 Accidents

As a part of our review, we calculated the offsite dose consequences of a postulated rupture of an ADHRS heat exchanger tube when the ADHRS is operating.

The ADHRS is designed to operate only in OC 4 and 5 (cold shutdown and refueling). Therefore, no new fuel damage is assumed as a result of this tube failure. We assumed that the radioactivity available for a postulated uncontrolled release to the environment due to a failure of the ADHRS pressure boundary will be the maximum amount of radioactivity allowed in the reactor primary coolant by the GGNS TS. This reactor coolant activity limit is prior to the failure and assumes that the entire reactor primary coolant mass is released to the environment. The calculation further assumes that all noble gases and ten percent of the radioiodines are instantaneously released, unfiltered, to the site boundary using the zero to two hour atmospheric dispersion factor. No iodine spiking in the coolant due to the ADHRS failure is assumed. Our analyses indicate that the resultant offsite boundary doses are 3 rem thyroid and 0.2 rem whole body. These doses are well within the radiation exposure guidelines of 10 CFR Part 100.

As a result of the ADHRS failure, the entire reactor coolant mass is assumed to enter the groundwater table below the plant and to move to the

Mississippi River. There are no unrestricted groundwater users between the plant and the river. However, the Mississippi River provides a source of potable water to an industrial user well downstream of the plant. We previously calculated an overall dilution factor of 7.6×10^8 at this users intake (see "Safety Evaluation Report related to the operation of Grand Gulf Nuclear Station, Units 1 and 2," September 1981, Section 15.5, concerning a postulated radioactive release due to a radioactive liquid tank failure). Considering dilution only, the calculated radionuclide concentrations in the Mississippi River are small fractions of the limits of 10 CFR Part 20, Appendix B, Table 2, Column 2, for unrestricted areas.

Based on our independent accident analyses, we conclude that the proposed ADHRS design is acceptable because failure of the ADHRS allowing the entire reactor coolant mass to be released to the environment meets the limits in 10 CFR Part 20 and the guidelines in 10 CFR Part 100.

2.5 Technical Specification Changes

One of the proposed TS changes is to add the new radiation monitor in the PSW to TS Table 3.3.7.1-1. The new PSW radiation monitor would be added as Item 3 with the operational conditions specified as a new footnote which states: "with ADHR system heat exchanger in operation." The identical surveillance requirements for those of the component cooling water and the standby service water radiation monitors are added as Item 3 of Table 4.3.7.1-1 for the PSW radiation monitor. The design of this radiation monitor as discussed in Section 2.2 was found to be acceptable. Therefore, the addition of this TS is acceptable.

The other proposed TS change is to add the new thermal overload protection devices for isolation valves E12F066A and E12F066B to Table 3.8.4.2-1. The design of these devices, as discussed in Section 2.2, was found to be acceptable. Therefore, the addition of this TS is acceptable.

During the review, we questioned the licensee's interpretation and implementation of the existing Technical Specifications for the ECCS and RHR systems during OC 4 and 5. With regard to ECCS requirements, the licensee committed to implement administrative controls in the form of a TSPS to require that at least one of the two ECCS subsystems required operable by TS 3.5.2 be capable of automatic initiation and injection of water to the reactor vessel. In addition, the TSPS will require that if no ECCS subsystem with automatic initiation and injection is operable, then operations which have a potential for draining the reactor vessel will be suspended immediately. With regard to RHR requirements, and in order to consider ADHRS as part of the shutdown cooling means, the licensee committed to implement administrative controls in the form of a TSPS that provides requirements as follows:

1. For TS 3.9.11.2 (OC 5 with a low water level) and TS 3.4.9.2 (OC 4), one operable and one operating shutdown cooling system:

    a. In the event that a loss of offsite power occurs, one of the systems shall be capable of removing decay heat (i.e., powered

by an onsite power source). No single failure (in addition to the loss of offsite power) need be assumed in this case.

b. In the event of the loss of one of the operating systems, the operable system shall be placed in service for decay heat removal. Relevant action statements of the TS shall also be used.

c. In the event of a loss of offsite power and the loss of the operating shutdown cooling system (either ADHRS or RHR), an ECCS system shall be operable and capable of being powered with its associated onsite power supply.

2. For TS 3.9.11.1 (OC 5 with a high water level), only one operating shutdown system is required. When the ADHRS is being used to fulfill the requirements of an alternate, as described in TS 3.9.11.1, Action a, an RHR system shall be available as a backup and capable of accommodating a loss of offsite power (i.e., can be powered by an onsite power).

Section 2.3 identifies additional procedural limitations and requirements for operation of the ADHRS. Automatic isolation of the RHR common suction line is required upon receipt of a low reactor vessel water level signal. Actions are needed to eliminate the adverse interaction of the ADHRS on the operability of LPCI A subsystem and the operability of the suppression pool water level instrumentation. Procedures are needed to preclude the use of ADHRS in OC 1, 2 or 3.

We evaluated the proposed subsystem procedural requirements and found that the existing safety margin of the TS for the ECCS and RHR systems does not significantly decrease with implementation of the procedural requirements. Therefore, for the short term, the staff concludes that addition of the ADHRS as one of the shutdown cooling systems is acceptable for RF03, using these requirements. The licensee committed to evaluate incorporation of these requirements into the TS for the long term. The evaluation will be completed by August 28, 1989 and submitted to NRC by September 22, 1989. That submittal will document the results of the evaluation, including TS changes as necessary. This commitment for the long term implementation of these requirements is acceptable.

The licensee has proposed the addition of a note to TS 3.4.9.2, 3.9.11.1 and 3.9.11.2 to limit the use of the ADHRS with the present TS to RF03. These TS changes are acceptable.

2.6 Summary

We have evaluated the licensee's submittals including the ADHRS functional design requirements, operational evaluation, procedural requirements, and TSPS requirements. Therefore, we conclude that with the appropriate procedures and TSPS and with adequate operator training, operation of the proposed ADHRS is acceptable for RF03. The proposed TS changes are also acceptable for RF03

For the long term use of the ADHRS after RF03, additional considerations for TS to implement limiting conditions for operation of ECCS subsystems and shutdown cooling loops, including the ADHRS are needed. The licensee has committed to evaluate TS changes and by October 2, 1989, to provide the results of its evaluation for our review and approval.

3.0 ENVIRONMENTAL CONSIDERATION

This amendment changes a requirement with respect to the installation or use of a facility component located within the restricted area as defined in 10 CFR Part 20 and changes to the surveillance requirements. The staff has determined that the amendment involves no significant increase in the amounts, and no significant change in the types, of any effluents that may be released off site; and that there is no significant increase in individual or cumulative occupational radiation exposure. The Commission has previously issued a proposed finding that this amendment involves no significant hazards consideration and there has been no public comment on such finding. Accordingly, this amendment meets the eligibility criteria for categorical exclusion set forth in 10 CFR 51.22(c)(9). Pursuant to 10 CFR 51.22(b), no environmental impact statement or environmental assessment need be prepared in connection with the issuance of this amendment.

4.0 CONCLUSION

The Commission made a proposed determination that this amendment involves no significant hazards consideration, which was published in the Federal Register (54 FR 5166) on February 1, 1989, and consulted with the State of Mississippi. No public comments or requests for hearing were received, and the State of Mississippi did not have any comments.

The staff has concluded, based on the considerations discussed above, that: (1) there is reasonable assurance that the health and safety of the public will not be endangered by operation in the proposed manner, and (2) such activities will be conducted in compliance with the Commission's regulations and the issuance of this amendment will not be inimical to the common defense and the security, or to the health and safety of the public.

Principal Contributors: S. Sun, Reactor Systems Branch
H. Shaw, Mechanical Engineering Branch
E. J. Sullivan, Jr., Mechanical Engineering Branch
R. Lipinski, Mechanical Engineering Branch

S. Chan, Structural and Geosciences Branch
F. Litton, Materials Engineering Branch
D. Notley, Chemical Engineering Branch
J. Lee Radiation Protection Branch
C. Hinson, Radiation Protection Branch
O. Chopra, Electrical Systems Branch
R. Jones, Reactor Systems Branch
B. Marcus, Instrumentation and Control Systems Branch
C. Schulten, Technical Specifications Branch
L. Kintner, Project Directorate II-1

Dated: March 27, 1989

FIGURE 1: ALTERNATE DECAY HEAT REMOVAL SYSTEM

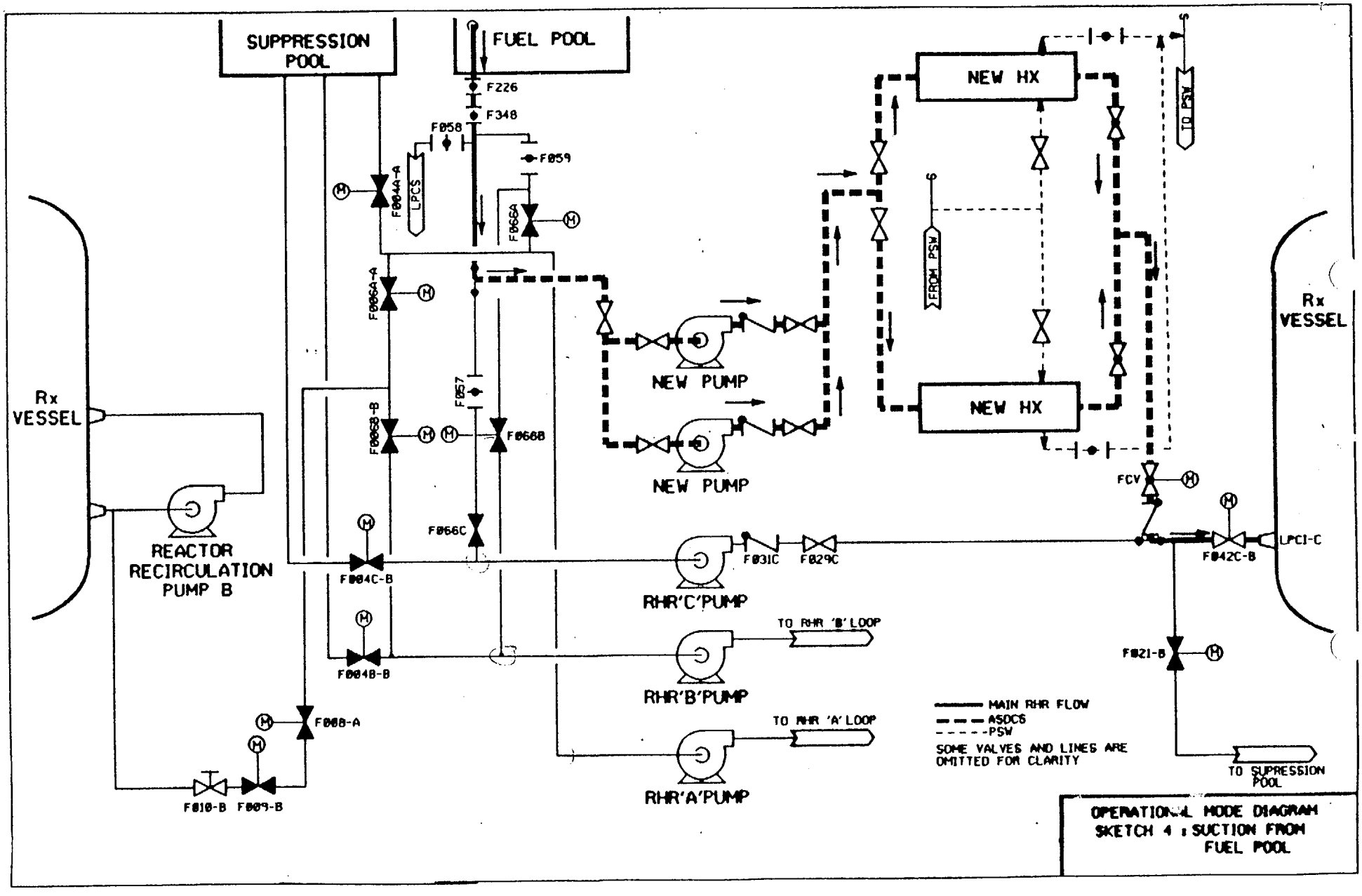

FIGURE 2

GRAND GULF NUCLEAR STATION
RFO3 SCHEDULE

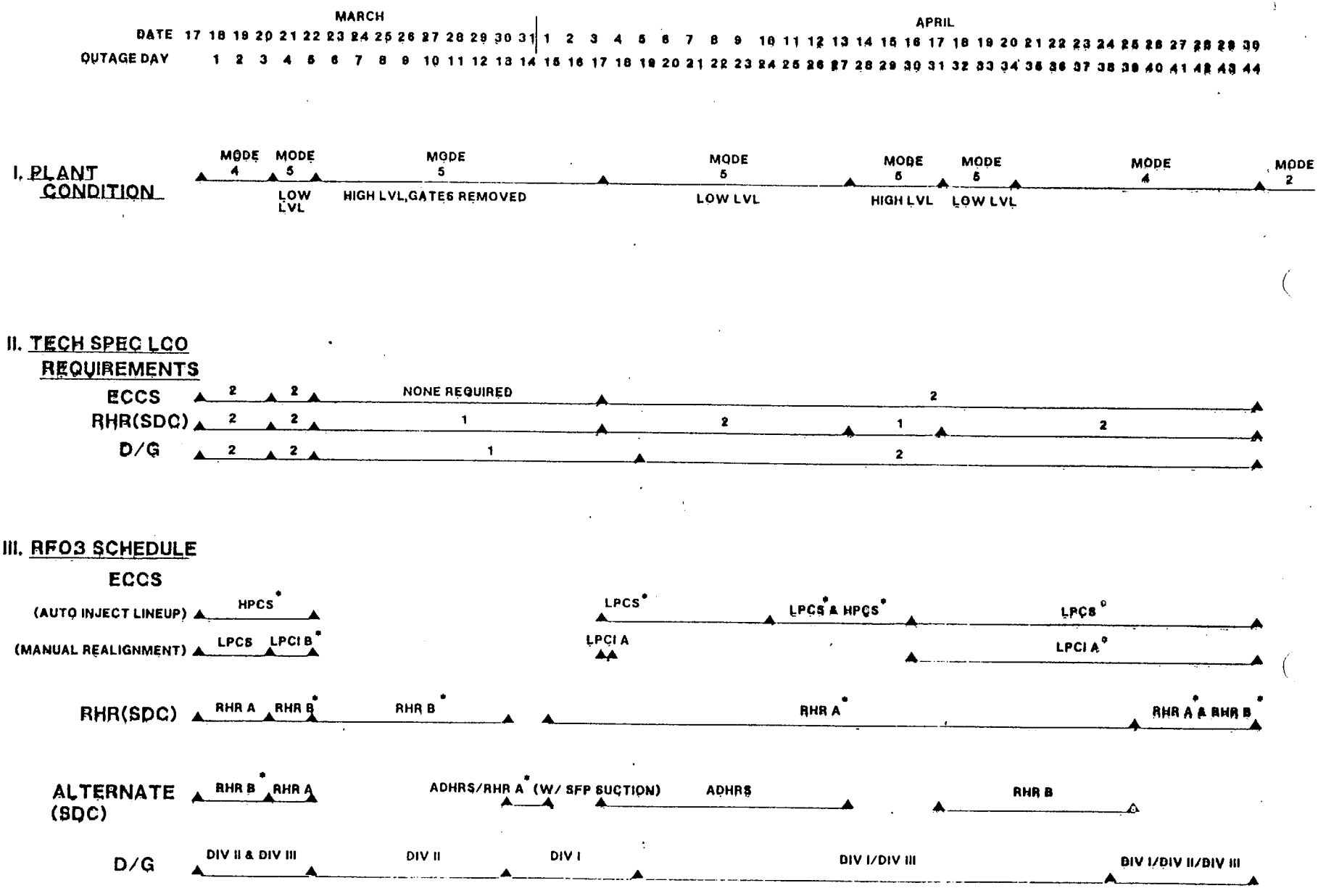

*ASSOCIATED ONSITE EMERGENCY POWER OPERABLE