NMC
Committed to Nuclear Excellence

Nuclear Management Company, LLC
Prairie Island Nuclear Generating Plant
1717 Wakonade Dr. East • Welch MN 55089

April 17, 2002

US Nuclear Regulatory Commission
Attn: Document Control Desk
Washington, DC 20555

PRAIRIE ISLAND NUCLEAR GENERATING PLANT
Docket Nos. 50-282 License Nos. DPR-42
Docket Nos. 50-306 License Nos. DPR-60

Prairie Island Emergency Plan
Implementing Procedures - F3

Emergency Response Plan Implementing Procedures

Furnished with this letter are the Prairie Island Nuclear Generating Plant Emergency Plan Implementing Procedures F3. This revision includes the following procedures:

INDEXES: Emergency Plan Implementing Procedures TOC

REVISIONS

F3-17	Core Damage Assessment	Rev 9
F3-3	Responsibilities During a Notification of Unusual Event	Rev 18
F3-4	Responsibilities During an Alert, Site Area, or General Emergency	Rev 28
F3-6	Activation & Operation of Technical Support Center	Rev 16
F3-30	Transition to Recovery	Rev 6
F3-2	Classifications of Emergencies	Rev 29

DELETIONS

INSTRUCTIONS:

Please post changes in your copy of the Prairie Island Nuclear Generating Plant Emergency Plan Implementing Procedures. Procedures, which have been superseded or deleted, should be destroyed. Please sign and return the acknowledgment of this update to Bruce Loesch, Prairie Island Nuclear Generating Plant, 1717 Wakonade Drive East, Welch, MN 55089.

A045

If you have any questions, please contact Mel Agen at 651-388-1121 Extension 4240.

Mano K. Nazar
Site Vice President
Prairie Island Nuclear Generating Plant

c: USNRC – Steve Orth, Region III (2 copies)
NRC Resident Inspector (w/o attachment)
J Silberg (w/o attachment)
M Agen (w/o attachment)
Records Management (Doc Control Copy) (w/o attachment)
NL File (w/o attachment)

Mfst Num: 2002 - 0291 Date : 04/15/02
FROM : Bruce Loesch/Mary Gadient Loc : Prairie Island
TO : UNDERWOOD, BETTY J
Copy Num: 515 Holder : US NRC DOC CONTROL DESK
SUBJECT : Revisions to CONTROLLED DOCUMENTS

****

Procedure #	Rev	Title

Revisions:
==========

F3-17	9	CORE DAMAGE ASSESSMENT
F3-3	18	RESPONSIBILITIES DURING A NOTIFICATION OF EVENT
F3-4	28	RESPONSIBILITIES DURING AN ALERT, SITE ARE OR GENERAL EMERGENCY
F3-6	16	ACTIVATION & OPERATION OF TECHNICAL SUPPOR
F3-30	6	TRANSITION TO RECOVERY
F3-2	29	CLASSIFICATIONS OF EMERGENCIES

UPDATING INSTRUCTIONS

Place this material in your Prairie Island Controlled Manual or File. Remove revised or cancelled material and recycle it. Sign and date this letter in the space provided below within ten working days and return to Bruce Loesch or Mary Gadient, Prairie Island Nuclear Plant, 1717 Wakonade Drive E., Welch, MN 55089.
Contact Bruce Loesch (ext 4664) or Mary Gadient (ext 4478) if you have any questions.

Received the material stated above and complied with the updating instructions

_____ Date _____

PRAIRIE ISLAND NUCLEAR GENERATING PLANT	Title: Emergency Plan Implementing Procedures TOC Effective Date : 04/15/02
Approved By: Joyce Chitty / MG BPS Supt	

Document #	Title	Rev
F3-1	ONSITE EMERGENCY ORGANIZATION	19
F3-2	CLASSIFICATIONS OF EMERGENCIES	29
F3-3	RESPONSIBILITIES DURING A NOTIFICATION OF UNUSUAL EVENT	18
F3-4	RESPONSIBILITIES DURING AN ALERT, SITE AREA, OR GENERAL EMERGENCY	28
F3-5	EMERGENCY NOTIFICATIONS	20
F3-5.1	SWITCHBOARD OPERATOR DUTIES	8
F3-5.2	RESPONSE TO FALSE SIREN ACTIVATION	9
F3-5.3	RESPONSE TO RAILROAD GRADE CROSSING BLOCKAGE	8
F3-6	ACTIVATION & OPERATION OF TECHNICAL SUPPORT CENTER	16
F3-7	ACTIVATION & OPERATION OF OPERATIONAL SUPPORT CENTER (OSC)	15
F3-8	RECOMMENDATIONS FOR OFFSITE PROTECTIVE ACTIONS	19
F3-8.1	RECOMMENDATIONS FOR OFFSITE PROTECTIVE ACTIONS FOR THE ON SHIFT EMERGENCY DIRECTOR /SHIFT MANAGER	12
F3-9	EMERGENCY EVACUATION	16
F3-10	PERSONNEL ACCOUNTABILITY	18
F3-11	SEARCH & RESCUE	7
F3-12	EMERGENCY EXPOSURE CONTROL	14
F3-13	OFFSITE DOSE CALCULATIONS	14
F3-13.3	MANUAL DOSE CALCULATIONS	10
F3-13.4	MIDAS METEOROLOGICAL DATA DISPLAY	6
F3-13.5	ALTERNATE METEOROLOGICAL DATA	4

Document #	Title	Rev
F3-13.6	WEATHER FORECASTING INFORMATION	11
F3-14.1	ONSITE RADIOLOGICAL MONITORING	11
F3-14.2	OPERATIONS EMERGENCY SURVEYS	9
F3-15	RESPONSIBILITIES OF THE RADIATION SURVEY TEAMS DURING A RADIOACTIVE AIRBORNE RELEASE	22
F3-16	RESPONSIBILITIES OF THE RADIATION SURVEY TEAMS DURING A RADIOACTIVE LIQUID RELEASE	16
F3-17	CORE DAMAGE ASSESSMENT	9
F3-18	THYROID IODINE BLOCKING AGENT (POTASSIUM IODIDE)	9
F3-19	PERSONNEL & EQUIPMENT MONITORING & DECONTAMINATION	6
F3-20	DETERMINATION OF RADIOACTIVE RELEASE CONCENTRATIONS	17
F3-20.1	DETERMINATION OF STEAM LINE DOSE RATES	9
F3-20.2	DETERMINATION OF SHIELD BUILDING VENT STACK DOSE RATES	9
F3-21	ESTABLISHMENT OF A SECONDARY ACCESS CONTROL POINT	10
F3-22	PRAIRIE ISLAND RADIATION PROTECTION GROUP RESPONSE TO A MONTICELLO EMERGENCY	16
F3-23	EMERGENCY SAMPLING	18
F3-23.1	EMERGENCY HOTCELL PROCEDURE	11
F3-24	RECORD KEEPING DURING AN EMERGENCY	7
F3-25	REENTRY	8
F3-26.1	OPERATION OF THE ERCS DISPLAY	7
F3-26.2	RADIATION MONITOR DATA ON ERCS	6
F3-26.3	ERDS - NRC DATA LINK	1
F3-29	EMERGENCY SECURITY PROCEDURES	18
F3-30	TRANSITION TO RECOVERY	6

Document #	Title	Rev
F3-31	RESPONSE TO SECURITY RELATED THREATS	5
F3-32	REVIEW OF EMERGENCY PREPAREDNESS DURING OR AFTER NATURAL DISASTER EVENTS	2

F3	CLASSIFICATIONS OF EMERGENCIES	NUMBER: F3-2
		REV: 29

REFERENCE USE
• *Procedure segments may be performed from memory.*
• *Use the procedure to verify segments are complete.*
• *Mark off steps within segment before continuing.*
• *Procedure should be available at the work location.*

O.C. REVIEW DATE:	OWNER:	EFFECTIVE DATE
040102 SC	M. Werner	4-15-02

TABLE OF CONTENTS

Section	Title	Page
1.0	PURPOSE	3
2.0	APPLICABILITY	3
3.0	PRECAUTIONS	3
4.0	RESPONSIBILITIES	4
5.0	DISCUSSION	5
5.1	Definitions	5
5.2	Emergency Action Levels	6
5.3	The Emergency Classification/Declaration/Implementation Process	6
5.4	Technical Specification Required Shutdown NUEs	7
5.5	Rapidly Escalating then De-escalating Events	8
5.6	The Emergency Action Level Reference Manual Number	9
6.0	PREREQUISITES	9
7.0	PROCEDURE	10

LIST OF ATTACHMENTS

Attachment 1 – Summary of Emergency Action Levels

1.0 PURPOSE

The purpose of this procedure is to specify the Emergency Action Levels that indicate an emergency condition exists and to properly classify the emergency into one of the four graded levels of emergency classifications. This procedure partially satisfies the requirement of 10CFR50.47 concerning the existence of an emergency classification and action level scheme.

2.0 APPLICABILITY

This instruction **SHALL** apply to all Shift Managers (SM), Shift Supervisors (SS), Control Room Operators (CRO), Emergency Directors (ED) and Emergency Manager (EM).

3.0 PRECAUTIONS

3.1 Attempt to verify the indications by checking secondary or coincident indicators.

3.2 An emergency classification should be made based on current plant conditions described in Attachment 1 of this procedure.

3.3 These emergency classifications do not apply to offsite transportation incidents that do NOT affect safe operation of the plant. Currently, the Radiation Protection group is responsible for offsite transportation incident assessment involving plant related shipments.

3.4 Rapidly Escalating Then De-escalating Events

3.4.1 In the case of an event that rapidly escalates then de-escalates or begins at a higher emergency class then rapidly de-escalates, the initial emergency classification should be based on current plant conditions.

3.4.2 During initial notifications to the NRC, the NRC should be informed of the current emergency classification and also the highest emergency classification reached during the course of the event. Emphasize the current emergency classification.

3.4.3 It may be discovered that a condition existed which met the emergency plan criteria but no emergency was declared and the basis for the emergency class no longer exists at the time of this discovery. This may be due to a rapidly concluded event or an oversight in the emergency classification made during the event or it may be determined during a post-event review. The NRC staff does not consider actual declaration of the emergency class to be necessary in these circumstances; an ENS notification (or an ENS update if the previously reported event was misclassified) within one hour of the discovery of the undeclared (or misclassified) event provides an acceptable alternative.

3.5 Continuously monitor the Control Room instrumentation, radiation monitors, or any other developments which would be indicative of further system degradation. Be prepared to escalate to a more severe emergency classification.

4.0 RESPONSIBILITIES

4.1 Duty Shift Manager has the responsibility to authorize the initial emergency classification.

4.2 Shift Supervisor of the unaffected unit has the responsibility to assist the Shift Manager as necessary including authorization of an emergency classification.

4.3 Shift Supervisor of the affected unit has the responsibility to direct activities related to the operation of the affected unit.

4.4 Emergency Director has the responsibility to authorize an emergency classification whenever an Alert, Site Area, or General Emergency is declared and the EOF is not activated.

4.5 If the EOF is activated and fully functional, the Emergency Manager has the responsibility to authorize an emergency classification.

4.6 Control Room Operators and affected unit Shift Supervisor have the responsibility to assist the Shift Manager or unaffected unit Shift Supervisor in the identification and verification of control board indications.

5.0 DISCUSSION

5.1 Definitions

5.1.1 Notification of Unusual Event – events that are in progress or have occurred which indicate a potential degradation of the level of safety of the plant.

No releases of radioactive material requiring offsite response or monitoring are expected unless further degradation of safety systems occurs.

5.1.2 Alert – events are in progress or have occurred which involve actual or potential substantial degradation of the level of safety of the plant. It is the lowest level of emergency classification when some necessity for emergency planning and offsite response is necessary.

Any releases expected are limited to small fractions of the EPA Protective Action Guideline exposure levels.

5.1.3 Site Area Emergency – events are in progress or have occurred which involve actual or likely major failure of plant functions needed for protection of the public.

Any releases are not expected to exceed the EPA Protective Action Guideline exposure levels except near the site boundary.

5.1.4 General Emergency – events are in progress or have occurred which involve actual or imminent substantial core degradation or melting with a potential for loss of containment integrity.

Releases during a General Emergency can be reasonably expected to exceed the EPA Protective Action Guideline exposure levels offsite for more than the immediate site area.

5.1.5 Emergency Action Levels (EAL) – specific instrument readings, surface or airborne contamination levels or radiation dose rates that designate a specific emergency class requiring emergency measures for that class.

5.2 Emergency Action Levels

Attached to this procedure is a Summary of Emergency Action Levels, Attachment 1. This summary identifies the four emergency classifications, the initiating condition(s), emergency action levels for each classification, and, where applicable, specific instruments and indications to be used to detect and classify an emergency.

The emergency action levels for each classification and the instrument readings and indications listed do not reflect a complete list of instrumentation that will show abnormal indications but does list those key parameters useful in classifying the event.

The Summary of Emergency Action Levels lists are based on the initiating conditions as required by Appendix 1 of NUREG-0654, accidents analyzed in the Prairie Island USAR, and the NRC Branch Position on Acceptable Deviations From NUREG-0654/ FEMA-REP-1, July 11, 1994.

5.3 The Emergency Classification/Declaration/Implementation Process

There are three distinct phases to consider: Classification, Declaration and Implementation.

5.3.1 Classification:

The act of **assessing** the EALs to determine the appropriate classification which the ongoing events are categorized. This may take a reasonable length of time (5 to 15 minutes for most situations) depending upon the complexity of the situation. This assessment period is consistent with the NRC Branch Position on Timeliness of Classification of Emergency Conditions, EPPOS No. 2.

5.3.2 Declaration:

The act of formally **declaring** the classification based on the assessment of EALs. This is the point at which the classification time is set and the 10CFR50, App. E 15-minute offsite notification clock starts.

5.3.3 Implementation:

The act of **making the notification and/or augmentation** of the emergency organizations.

5.3.4 Ideally, the Emergency Notification Report Form (PINGP 577) should be filled out to near completion while the classification phase is being conducted. Once the declaration is made by the SM/ED/EM, the 15-minute offsite notification time starts. The SM/ED/EM should review the contents of the Emergency Notification Report Form (PINGP 577) to ensure its completeness, verify the correct declaration time and then sign the form which gives permission to the Shift Emergency Communicator (or Offsite Communicator in EOF) to implement the E-Plan notifications.

5.3.5 Per 10CFR50.72 (a)(3) NRC notification is required immediately after the notification of the state and local agencies (which is completed within about 15 minutes) and not later than one hour after the emergency declaration.

5.4 Technical Specification Required Shutdown NUEs

5.4.1 In some cases, exceeding Technical Specification limits (e.g., RCS leakage, reactor coolant activity, etc.) is considered to be precursors to more serious events and warrant declaration of an NUE.

5.4.2 In other cases, exceeding Technical Specification limits for the period designated in the action statement **(IT.S. ACTIONS Table)** is an analyzed condition of the plant and does not, by itself, represent an emergency. These events are reportable in accordance with 10 CFR 50.72 as a non-emergencies.

However, if the plant is not brought to the required operating mode within the allowable Technical Specifications action statement time limit **(IT.S. ACTIONS Table COMPLETION Time)**, then a declaration of an Unusual Event should be declared.

5.4.3 With regard to Emergency Plan classifications, Operations should handle a Technical Specification required shutdown in the following manner:

A. The conditions of the plant should come first. That is, if the condition warrants initiating power reduction immediately, do so. The E-Plan classification can appropriately follow.

B. Following the initiation of the reduction in power or temperature, the classification phase of the E-Plan is started. Review of the EALs should be done to assess for proper classification. Once the Shift Manager has determined the appropriate classification for the event, the Shift Manager should declare the classification and note the time of declaration (this begins the 15-minute offsite notification clock).

This classification phase should be done within a reasonable time frame (5 to 15 minutes for most instances) determined by the circumstances.

C. Once the declaration is made, the Shift Manager should review the contents of the Emergency Notification Report Form (PINGP 577) to ensure its completeness, verify the correct declaration time and then sign the form which gives permission to the Shift Emergency Communicator to implement the E-Plan notifications.

5.5 Rapidly Escalating then De-escalating Events

In the case of an event that rapidly escalates then de-escalates or begins at a higher emergency class then rapidly de-escalates, the initial emergency classification should be based on current plant conditions.

It may be discovered that a condition existed which met the emergency plan criteria but no emergency was declared and the basis for the emergency class no longer exists at the time of this discovery. This may be due to a rapidly concluded event or an oversight in the emergency classification made during the event or it may be determined during a post-event review. The NRC staff does not consider actual declaration of the emergency class to be necessary in these circumstances; an ENS notification (or an ENS update if the previously reported event was misclassified) within one hour of the discovery of the undeclared (or misclassified) event provides an acceptable alternative.

The NRC should be informed of the current emergency classification and the highest emergency classification reached during the course of the event during the initial NRC notification via the ENS phone. The Shift Manager should ensure that this notification be performed by an appropriate individual other than the SEC using PINGP Form 666, Event Notification Worksheet. To avoid possible confusion, other offsite authorities will be informed of the current classification during the initial notification and then given the full description of the highest emergency classification reached during the first update on the follow-up notification.

5.6 The Emergency Action Level Reference Manual Number

Prairie Island Nuclear Generating Plant has prepared a written manual (EAL Reference Manual) to provide general information about Emergency Action Levels to offsite authorities who are involved in nuclear plant emergency planning. This manual provides a description with text and drawings of the various conditions that might cause the Prairie Island Nuclear Generating Plant to classify an event. By understanding what a particular condition or event means, emergency workers at the various offsite agencies should develop a clear idea of what is occurring at the plant during the emergency.

Each initiating condition in this procedure is followed by a cross reference number that corresponds to the appropriate classification condition in the EAL Reference Manual. When the Emergency Notification Report Form (PINGP 577) is completed, the initiating condition statement and the EAL Reference Manual cross reference number should be included on the form by using the label from "Emergency Initiating Conditions Labels – PINGP 1189" or writing this information as it appears in the shaded box on the appropriate page in the Summary of Emergency Action Levels.

6.0 PREREQUISITES

An off-normal condition corresponding to one of the initiating events described in Attachment 1 of this procedure is occurring or has occurred.

7.0 PROCEDURE

7.1 Any significant event that may be classified as an emergency condition **SHALL** be reported to the Shift Supervisor, Shift Manager and/or Emergency Director immediately.

NOTE:	**The events may be instrumentation readings or visual observations made by plant personnel.**

7.2 Attempt to verify the initial indication by comparing the indication to redundant instrument channels or to other related parameters, visual observations, and field reports as applicable.

7.3 The Shift Manager, unaffected Shift Supervisor or Emergency Director **SHALL** assess the situation and determine the emergency classification, using the guidelines of Attachment 1.

7.4 In those cases when an event rapidly escalates, then de-escalates or begins at a higher classification, then rapidly de-escalates, the initial emergency classification should be based on current plant conditions.

7.4.1 Inform the NRC of the current emergency classification and the highest emergency classification reached during the course of the event during the initial NRC ENS notification.

7.4.2 It may be discovered that a condition existed which met the emergency plan criteria but no emergency was declared and the basis for the emergency class no longer exists at the time of this discovery. This may be due to a rapidly concluded event or an oversight in the emergency classification made during the event or it may be determined during a post-event review. The NRC staff does not consider actual declaration of the emergency class to be necessary in these circumstances; an ENS notification (or an ENS update if the previously reported event was misclassified) within one hour of the discovery of the undeclared (or misclassified) event provides an acceptable alternative.

7.5 The Shift Supervisor of the affected unit should take immediate actions, using applicable plant operating procedures to return the plant to normal (or Mode 5, Cold Shutdown, if determined to be necessary).

7.6 If the EOF is not activated, the Shift Manager or Emergency Director **SHALL** declare the appropriate emergency classification and perform actions as specified in the appropriate responsibility procedure applicable to emergency classification:

7.6.1 For a Notification of Unusual Event, proceed to F3-3.

7.6.2 For an Alert, Site or General Emergency, proceed to F3-4.

If the EOF is activated, contact the Emergency Manager for consultation on whether or not to change the emergency classification. The Emergency Director is responsible to formulate the new classification while the Emergency Manager is responsible to authorize the reclassification.

7.7 Continue to assess and watch for changing parameters or visual indication of further system degradation and be prepared to escalate to a more severe emergency classification as indicated by the Emergency Action Levels in Attachment 1.

7.8 As plant conditions stabilize during a Notification of an Unusual Event (NUE) or Alert, consider terminating the event classification.

7.8.1 For the NUE and Alert classifications, the event may be terminated once the following criteria are met:

A. The plant is in stable condition with at least one fission product barrier intact, and

B. Radioactive gaseous and liquid effluent are being controlled within the following limits:

1. Gaseous effluent release rates (or resulting dose rates) are within plant limits as defined in Section 3.1 of H4, Offsite Dose Calculation Manual (ODCM), and

2. Liquid effluent release rates (or resulting concentrations) are within the plant limits as defined in "Old 10CFR20 Appendix B in Table II, Column 2 (April 1992)" located in H4, ODCM, Table 4.3 and

C. The potential for future degradation of plant conditions is small.

7.8.2 Termination of an NUE classification may be performed by the Shift Manager. Review of 5AWI 1.13.0, Plant Event Investigation and Recovery, should be completed to determine if this procedure needs to be implemented and the Plant Manager informed of the review.

7.8.3 Termination of an Alert classification may be performed by the Emergency Director if the EOF is not activated. Once the EOF is fully functional, the Emergency Manager **SHALL** terminate the Alert classification when the conditions are met for termination.

7.8.4 Termination of an Alert classification includes the dismissal of the site Emergency Response Organization. Any necessary in-plant or on-site follow-up activities should be coordinated and managed by the normal plant site organization. In some cases, conditions may require the establishment of a Recovery Organization in which case the Emergency Director and Emergency Manager should make this determination based on the extent of damage or other considerations. In this case 5AWI 1.13.0 should be reviewed and implemented as determined appropriate.

7.9 As plant conditions stabilize during a Site Area or General Emergency, consider transition to the Recovery phase.

NOTE:	**If the Site Area Emergency event does not require significant repairs or analysis beyond the capabilities of the normal plant site organization and the conditions of 7.8.1. A, B, & C are met, then the Site Area Emergency may be terminated without a transition to Recovery. However review and implementation of 5AWI 1.13.0 should be completed as appropriate.**

Transition to Recovery should be directed by the Emergency Manager with coordinated recovery planning by the site Emergency Response Organization. See F3–30, "Recovery", for instruction on transition to Recovery. Review and implementation of 5AWI 1.13.0 should be completed as appropriate.

SUMMARY

OF

EMERGENCY ACTION LEVELS

INITIATING CONDITION INDEX

No.	Condition Description	Page
1	Safety System Functions	3
2	Abnormal Primary Leak Rate	4
3	Deleted	8
4	Abnormal Primary/Secondary Leak	9
5	Core Fuel Damage	13
6	Loss of 2 of 3 Fission Product Barriers	15
7	Secondary Coolant Anomaly	21
8	Radiological Effluents	26
9	Major Electrical Failures	31
10	Control Room Evacuations	35
11	Fires	36
12	Plant Shutdown Functions	38
13	Fuel Handling Accidents	44
14	Deleted	46
15	Deleted	46
16	Security Threats	47
17	Hazards to Plant Operations	48
18	ISFSI (Independent Spent Fuel Storage Installation) Events	53
19	Natural Events	54
20	Other	59

Condition 1 : Safety System Functions

Failure of a safety or relief valve in a safety related system to close following reduction of applicable pressure.

(EAL Ref Manual 1B)

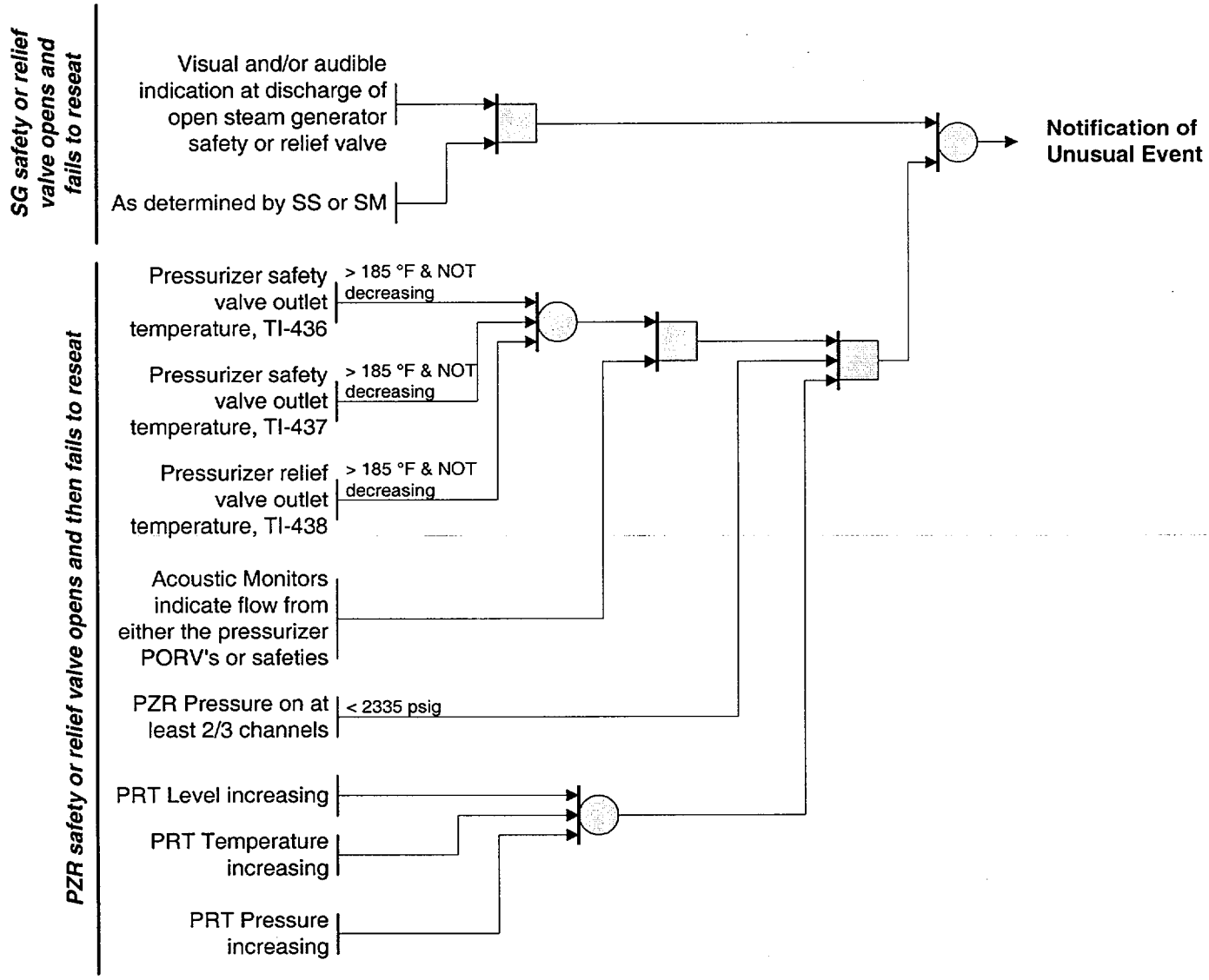

Condition 2: Abnormal Primary Leak

Primary system leak rate from unidentified or uncontrolled sources exceeding Technical Specifications.

(EAL Ref Manual 2A)

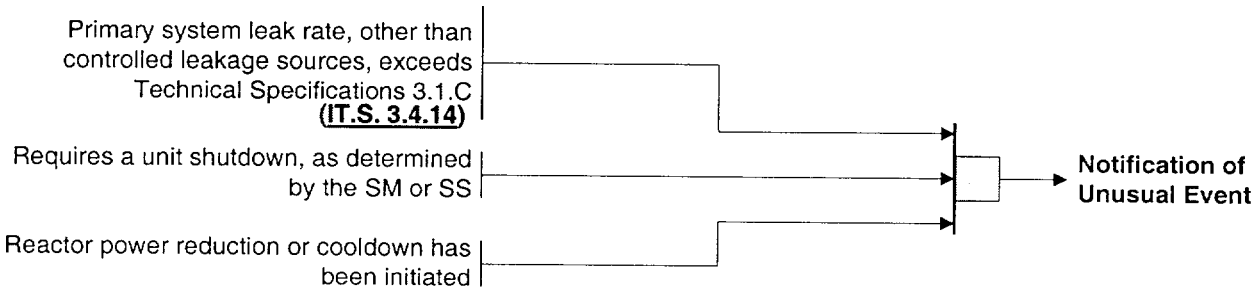

Primary coolant leak rate greater than 50 gpm.

(EAL Ref Manual 2B)

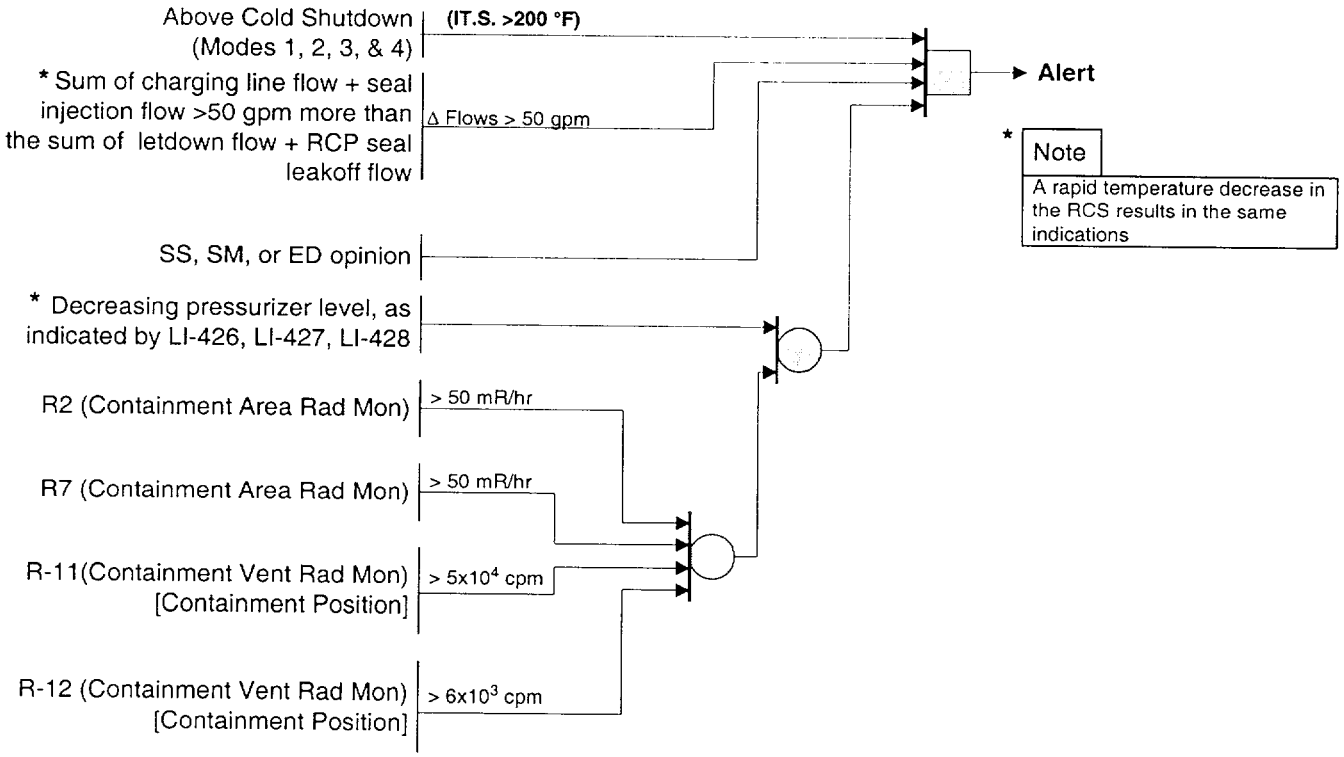

Condition 2: Abnormal Primary Leak

LOCA with leak rate in excess of available pump capacity. (Small LOCA with failure of SI or Large LOCA greater than SI flow.)

(EAL Ref Manual 2C)

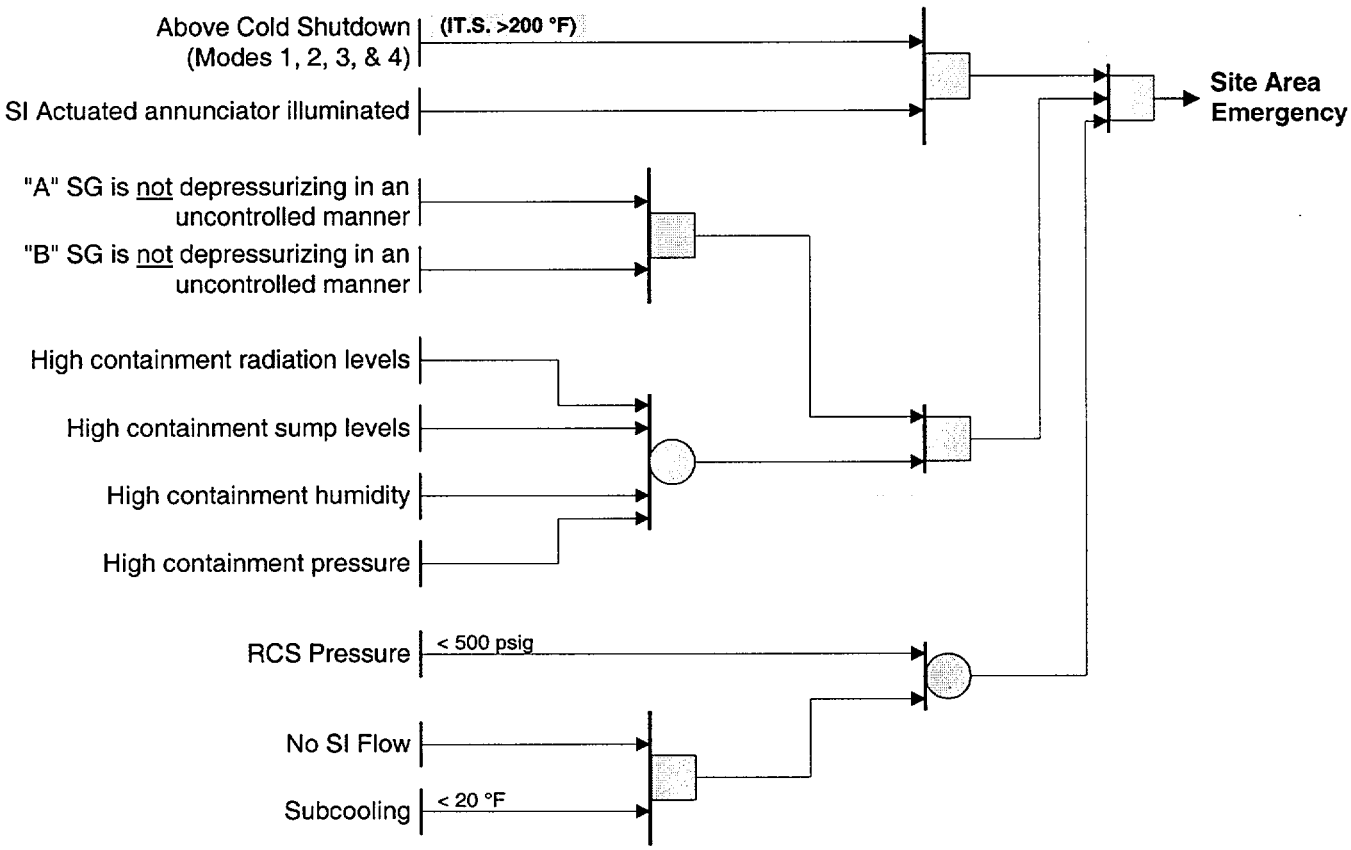

Condition 2: Abnormal Primary Leak

Small LOCA and initially successful ECCS. Subsequent failure of containment heat removal systems over several hours could lead to core melt and likely failure of containment.

(EAL Ref Manual 2D)

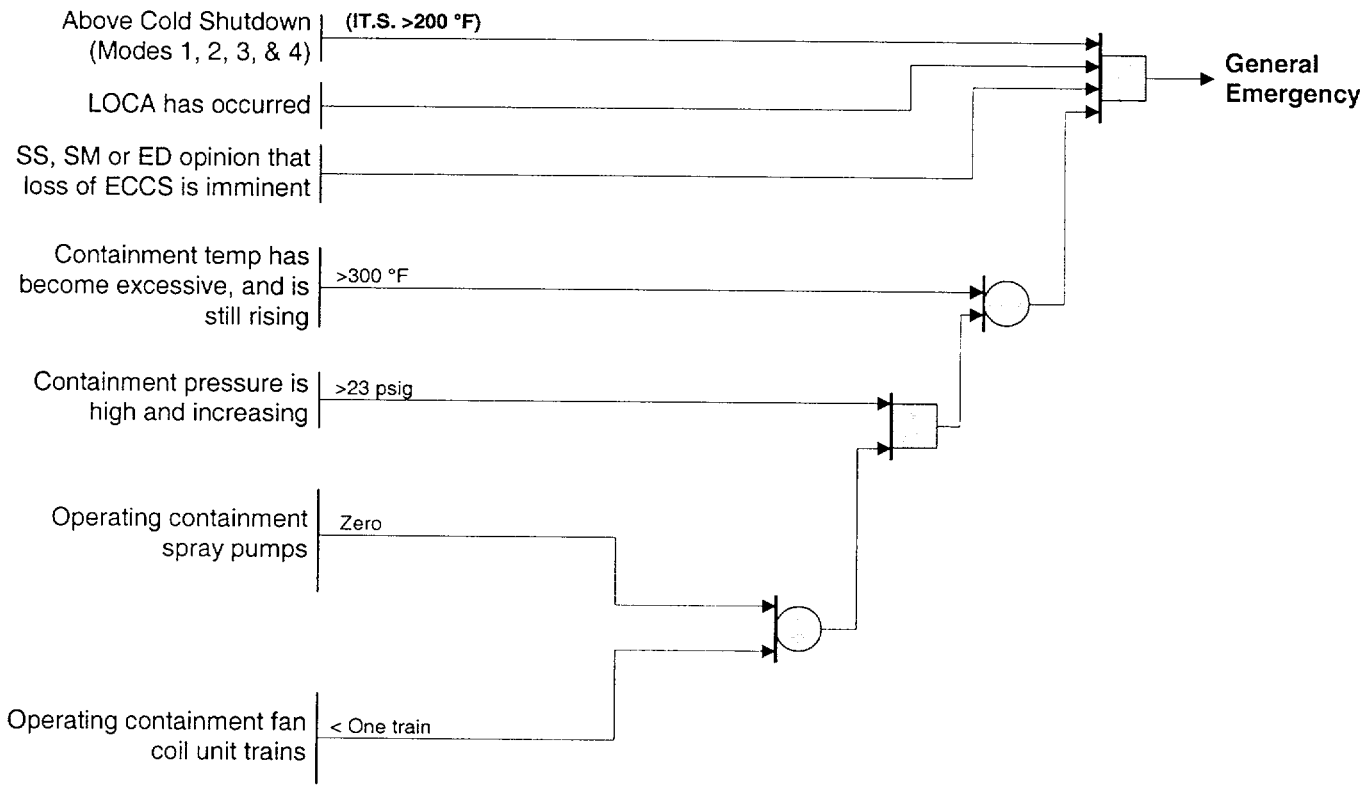

Condition 2: Abnormal Primary Leak

Small and large LOCA's with failure of ECCS to perform leading to severe core degradation or melt in from minutes to hours. Ultimate failure of containment likely for melt sequences.

(EAL Ref Manual 2E)

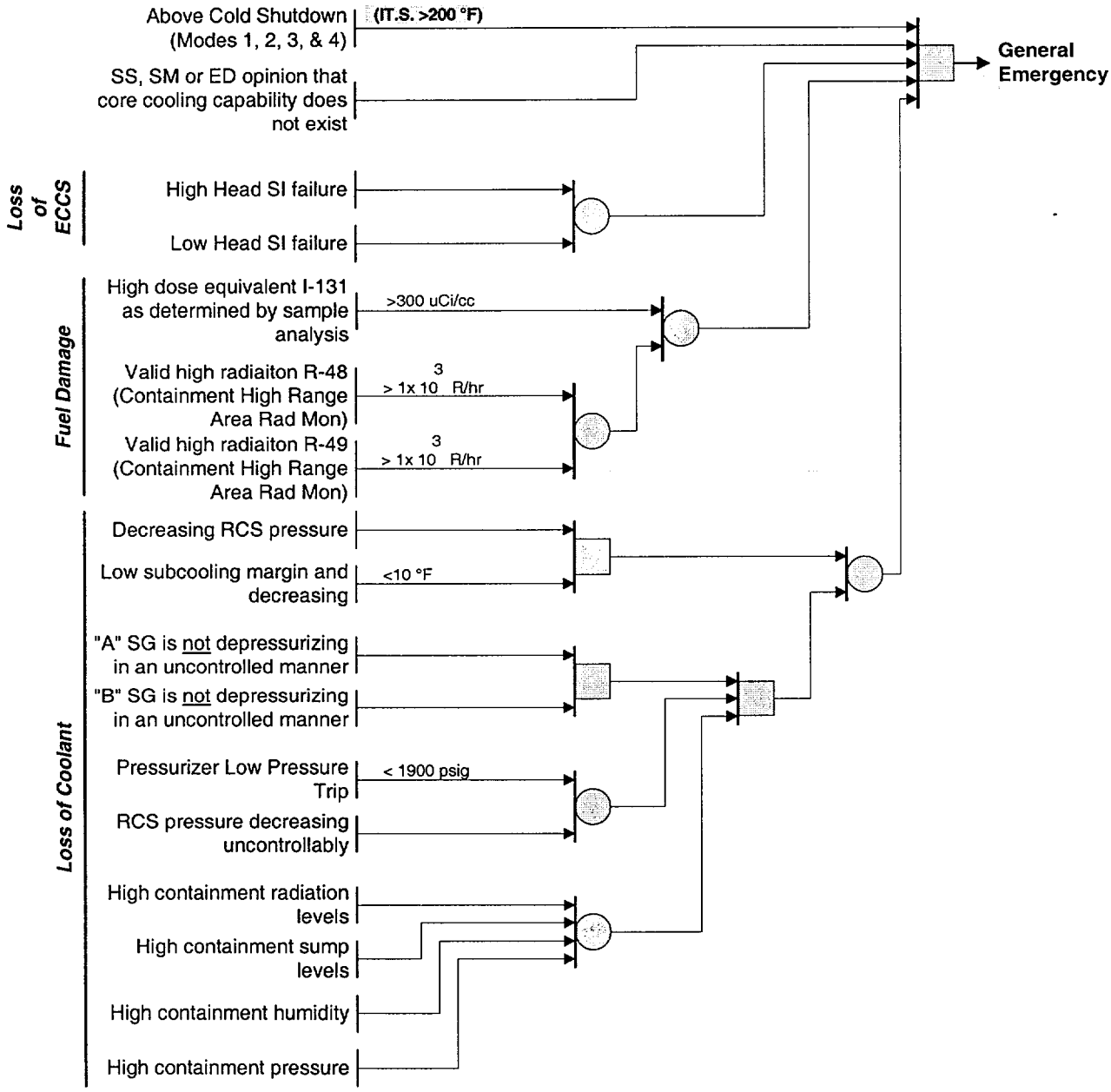

Condition 3 : Abnormal Coolant Temperature/Pressure

DELETED

Deleted based on NRC Branch Position On Acceptable Deviations From Appendix 1 to NUREG-0654/FEMA-REP-1, July 11, 1994.

Condition 4 : Abnormal Primary / Secondary Leak

Primary /Secondary leak rate exceeding Technical Specifications.

(EAL Ref Manual 4A)

SG primary to secondary leakage exceeds Tech Spec 3.1.C **(IT.S. 3.4.14)** limits → > 150 GPD through any 1 SG → **Notification of Unusual Event**

Primary /Secondary leak rate greater than 50 gpm.

(EAL Ref Manual 4B)

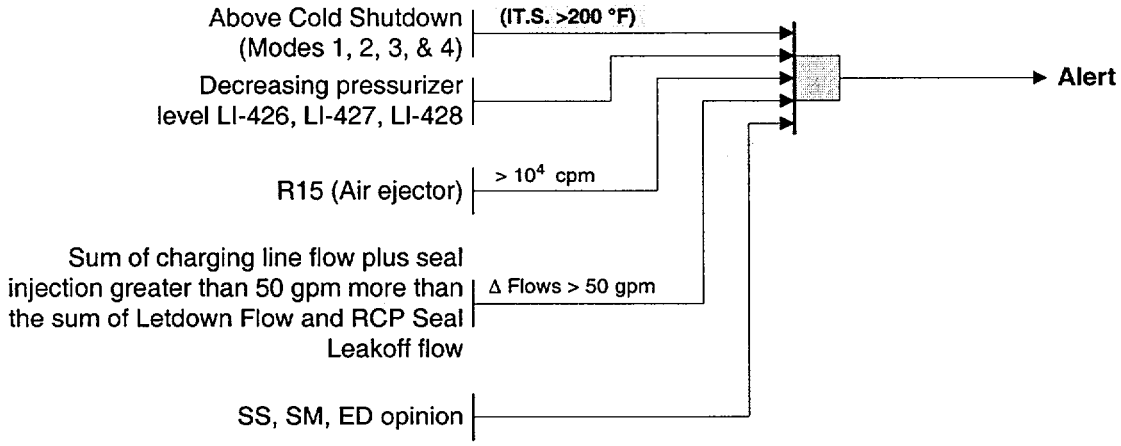

Condition 4 : Abnormal Primary /Secondary Leak

Failure of steam generator tube(s) resulting in ECCS actuation.

(EAL Ref Manual 4C)

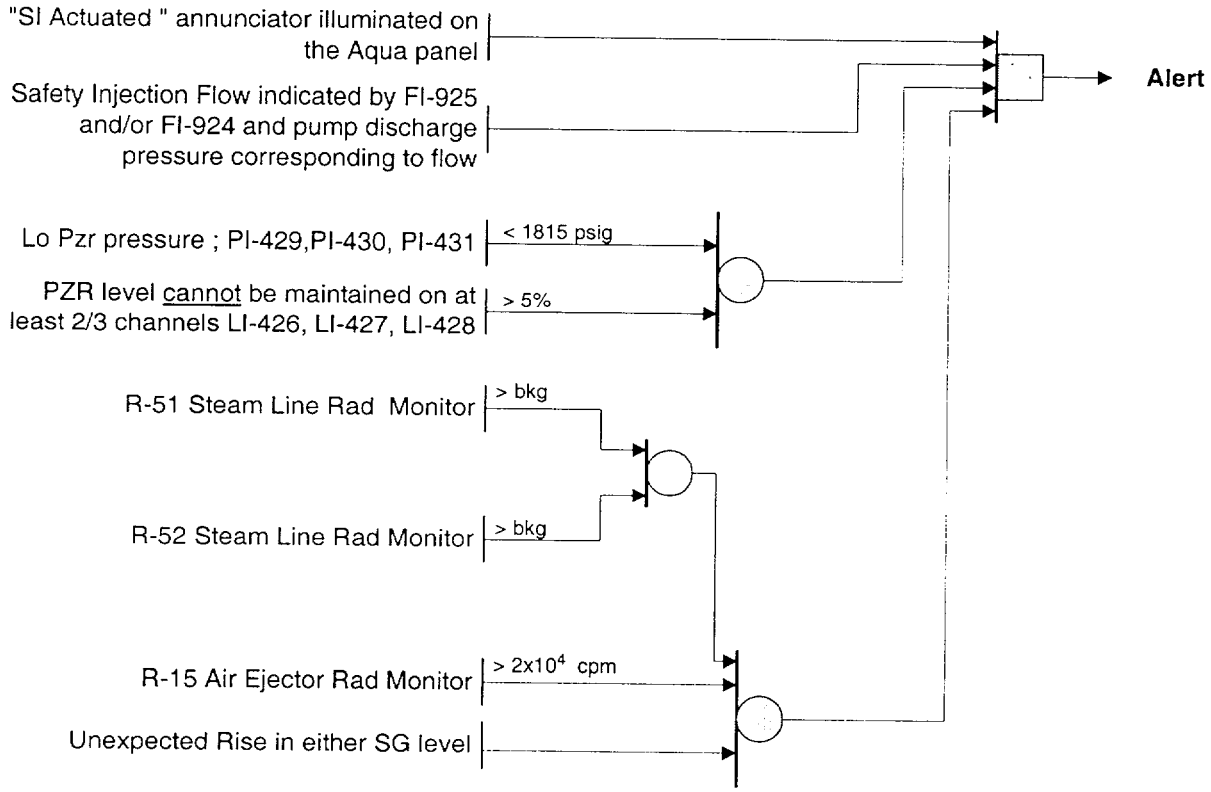

Condition 4 : Abnormal Primary /Secondary Leak

Failure of steam generator tube(s) resulting in ECCS actuation and high potential for loss of containment.

(EAL Ref Manual 4D)

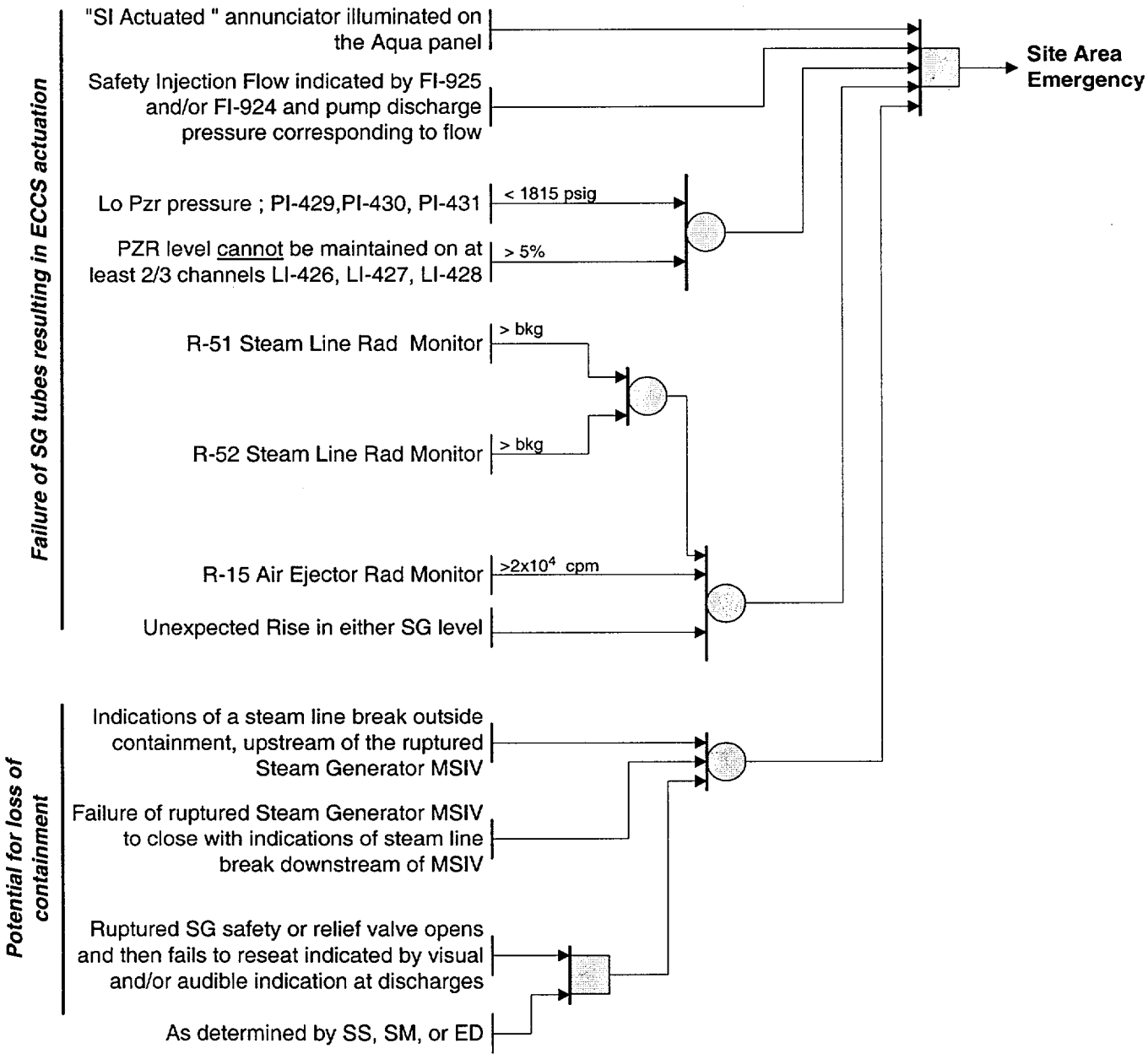

Condition 4 : Abnormal Primary /Secondary Leak

Failure of steam generator tube(s) resulting in ECCS actuation and loss of offsite power.

(EAL Ref Manual 4E)

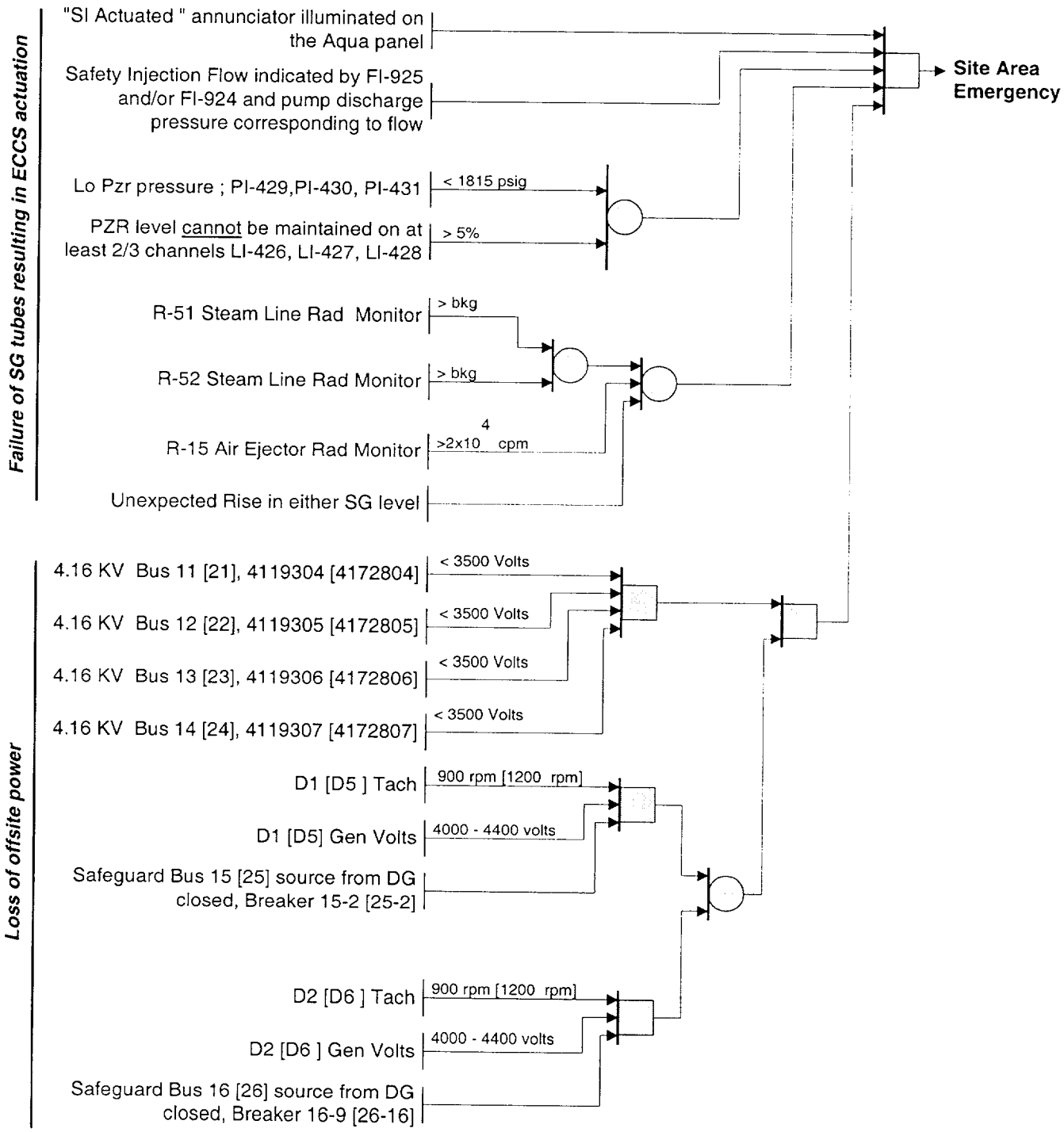

Condition 5 : Core Fuel Damage

Fuel Damage Indication **(EAL Ref Manual 5A)**

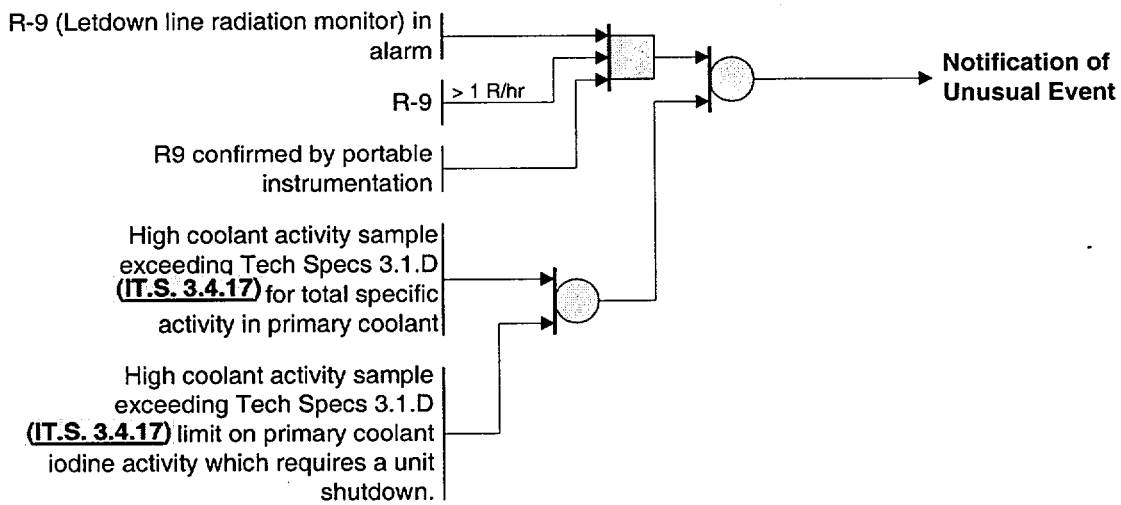

Severe Loss of fuel cladding **(EAL Ref Manual 5B)**

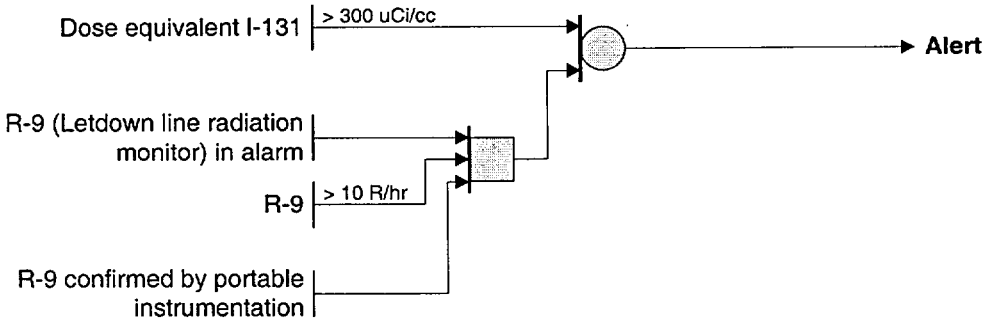

Condition 5 : Core Fuel Damage

Degraded core with possible loss of coolable geometry

(EAL Ref Manual 5C)

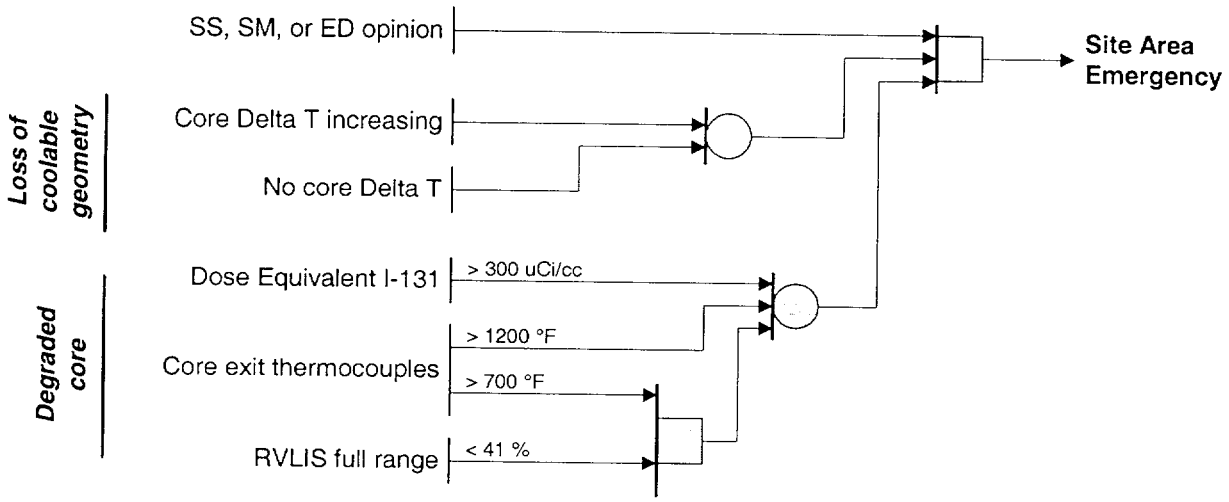

Condition 6 : Loss of 2 of 3 Fission Product Barriers

Loss of 2 of 3 fission product barriers with a potential loss of 3rd barrier. (EAL Ref Manual 6)

GENERAL EMERGENCY

NOTES:	**1. Three permutations exist for loss of 2 of 3 fission product barriers with a potential loss of 3rd barrier;** **A. Failure of cladding and primary coolant boundary with potential loss of containment.** **B. Failure of cladding and containment with potential loss of primary coolant boundary.** **C. Failure of containment and primary coolant boundary with potential loss of cladding.** **These 3 permutations are represented in the following 5 cases, each with its own set of EAL's:** **2. All cases are applicable to operations above Cold Shutdown (Modes 1, 2, 3, & 4).**

Condition 6: Loss of 2 of 3 Fission Product Barriers

Case 1: Loss of clad, loss of primary coolant boundary (LOCA), and high potential for loss of containment.

(EAL Ref Manual 6)

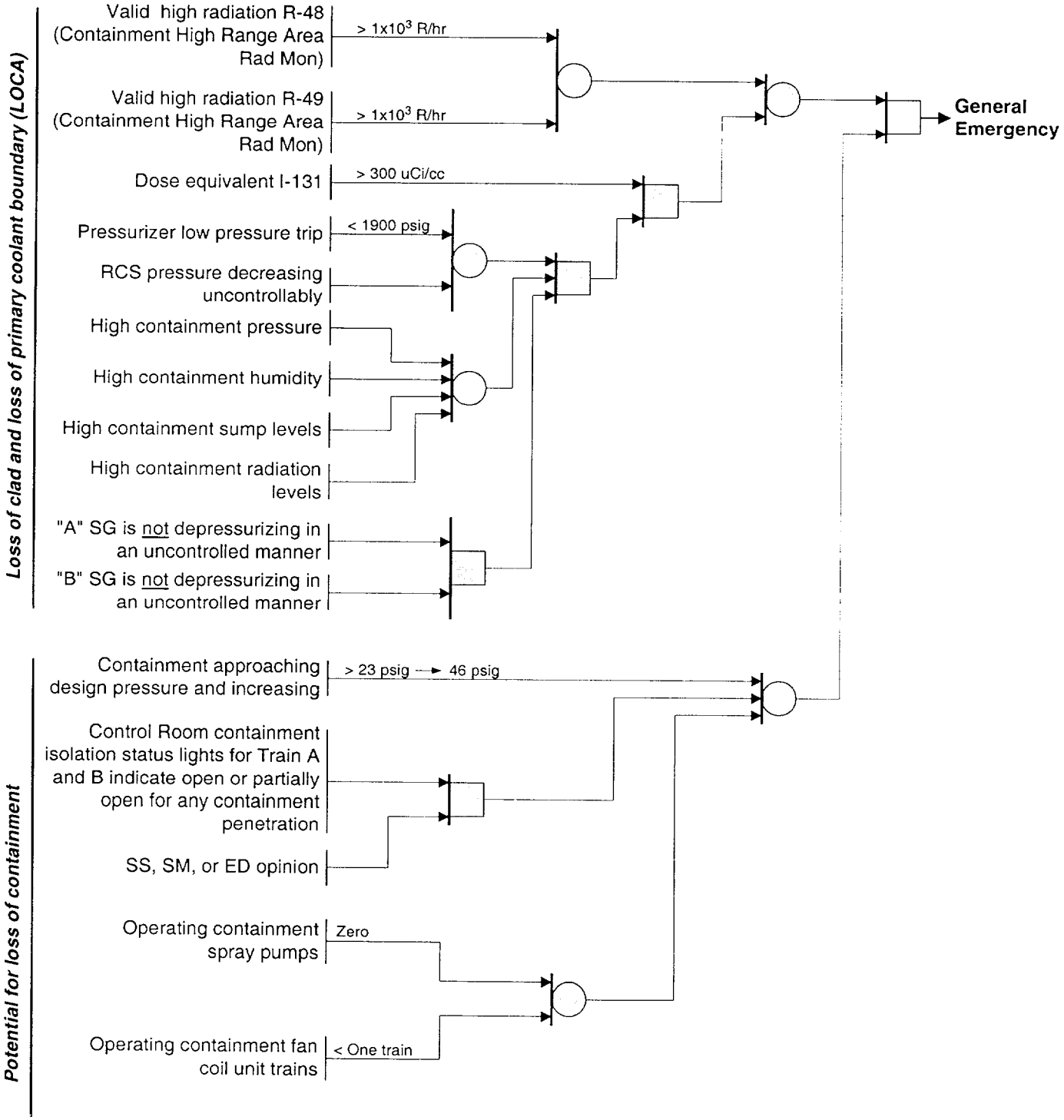

Condition 6: Loss of 2 of 3 Fission Product Barriers

Case 2: Loss of clad, SG tube rupture and high potential for loss of containment

(EAL Ref Manual 6)

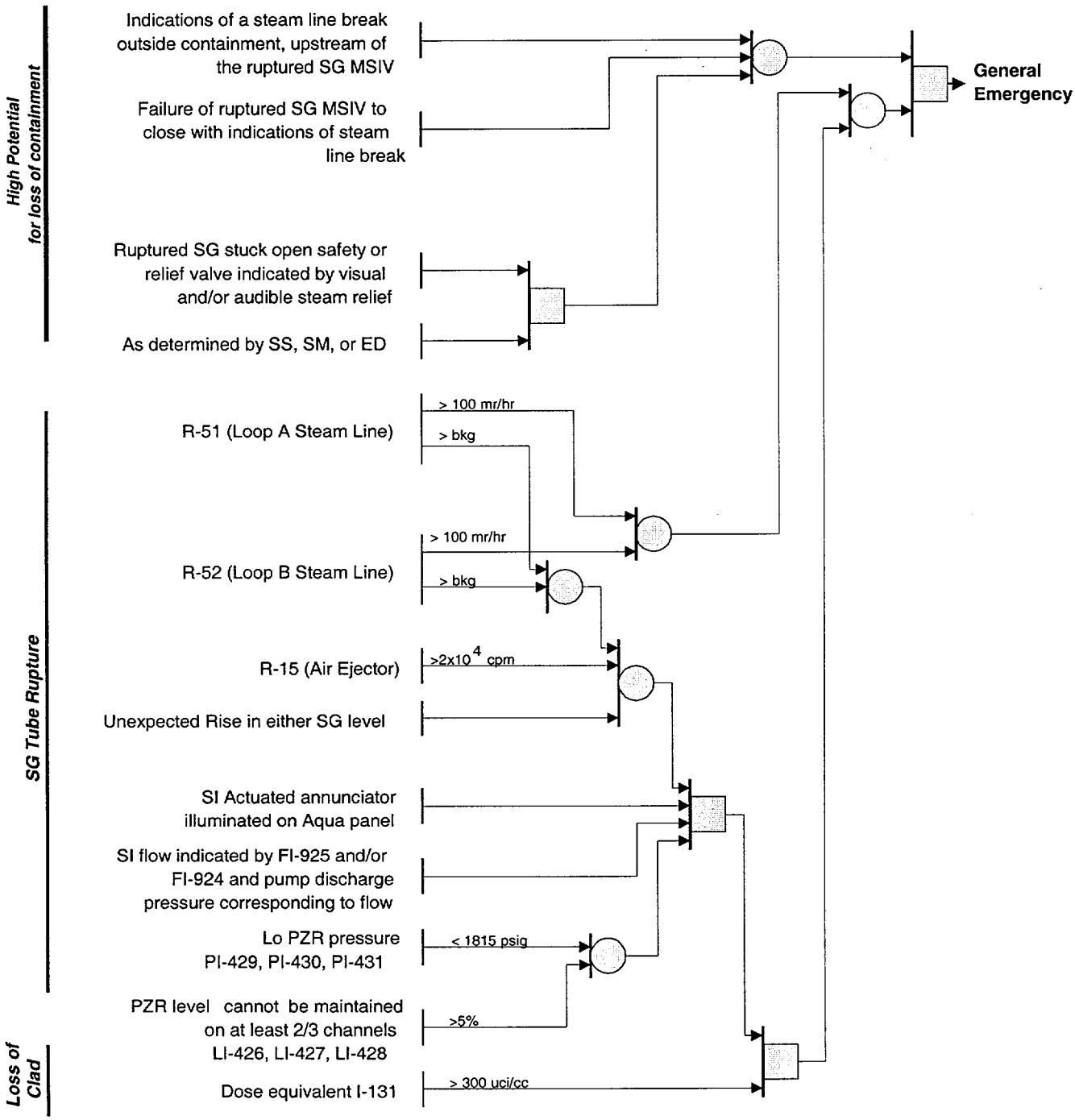

Condition 6: Loss of 2 of 3 Fission Product Barriers

Case 3 : Loss of clad, containment failure, and a high potential for loss of the RCS boundary.

(EAL Ref Manual 6)

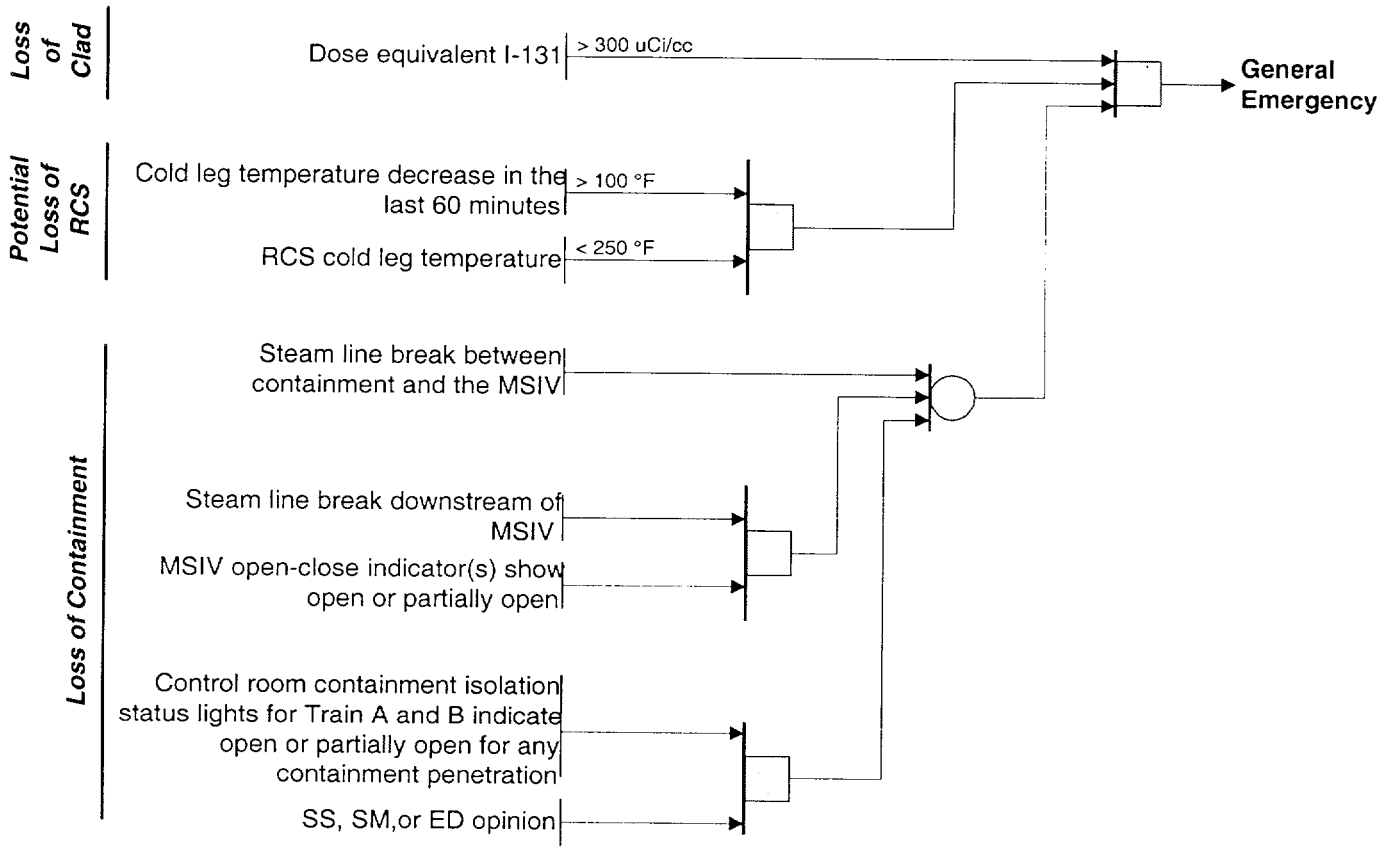

Condition 6: Loss of 2 of 3 Fission Product Barriers

Case 4 : Loss of RCS boundary (LOCA), loss of containment, and high potential for loss of cladding

(EAL Ref Manual 6)

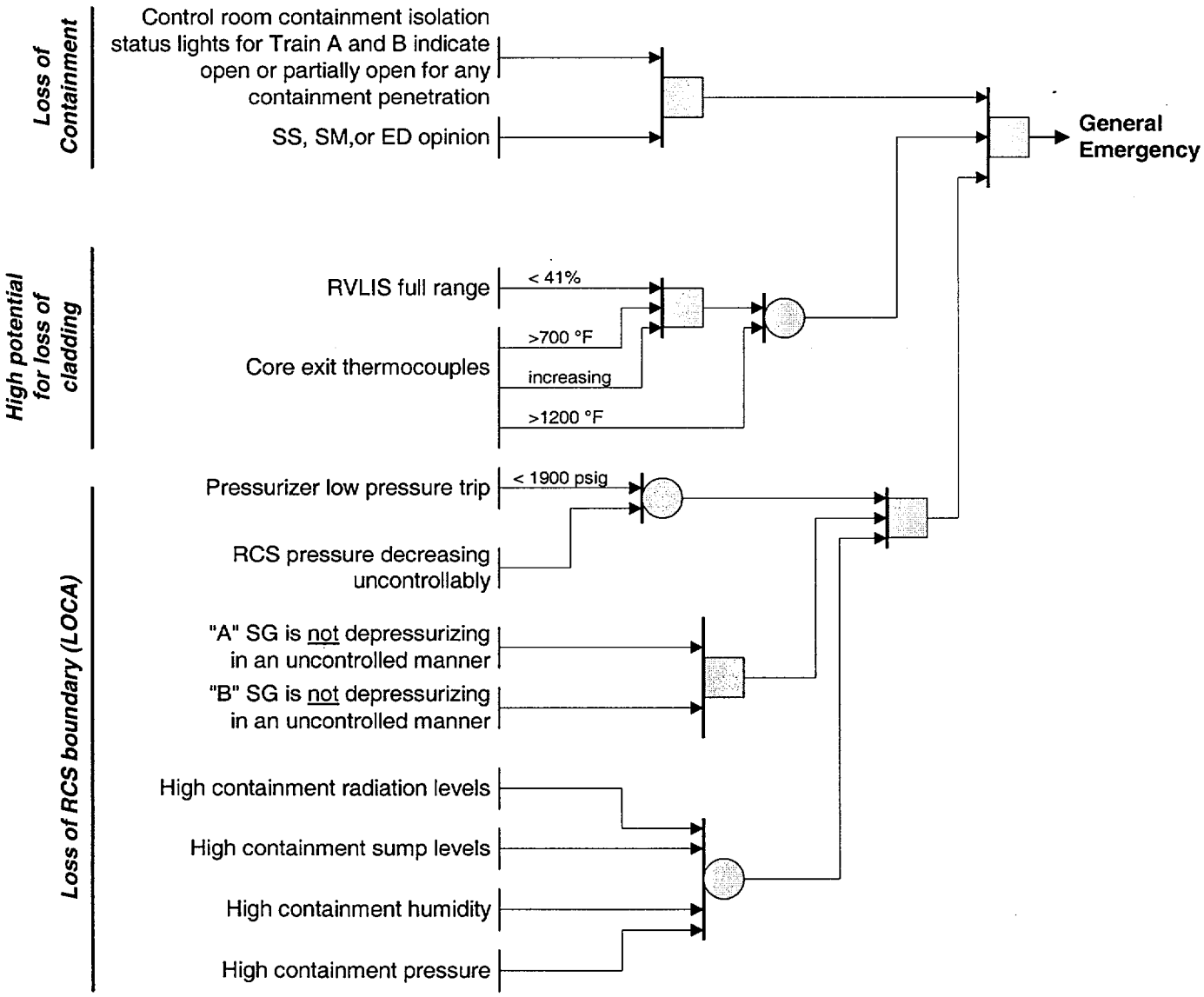

Condition 6: Loss of 2 of 3 Fission Product Barriers

Case 5 : Loss of RCS Boundary (SG Tube Rupture), loss of containment, and high potential for loss of cladding.

(EAL Ref Manual 6)

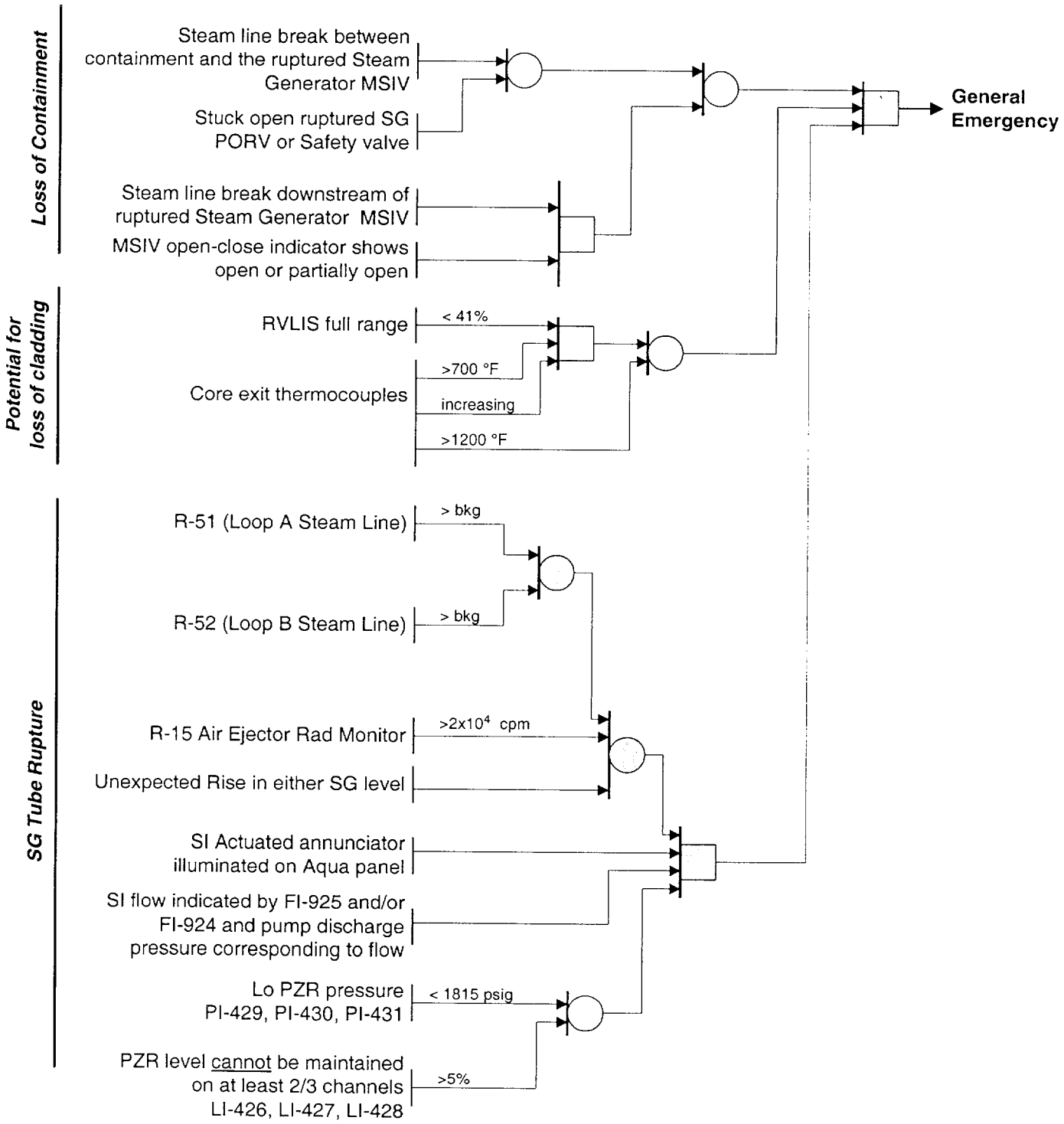

Condition 7 : Secondary Coolant Anomaly

Rapid depressurization of secondary side.

(EAL Ref Manual 7A)

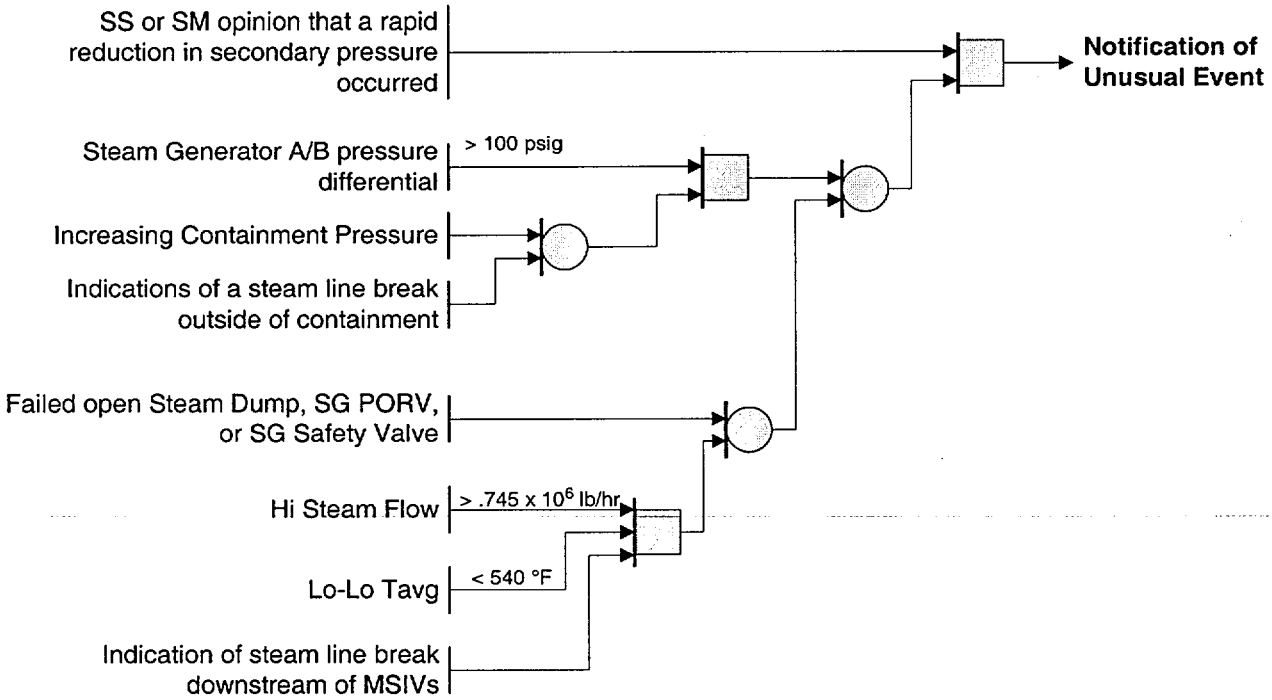

Condition 7 : Secondary Coolant Anomaly

Steam line break inside containment with significant (greater than 10 gpm) primary to secondary leak rate.

(EAL Ref Manual 7B)

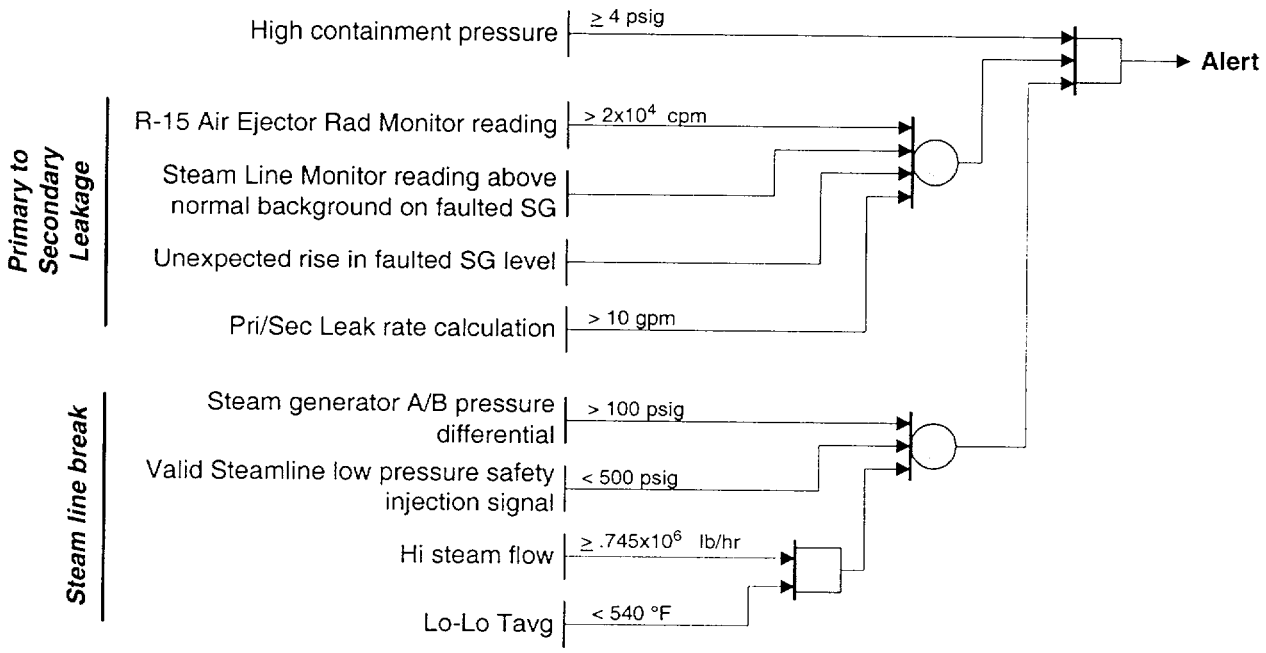

Condition 7 : Secondary Coolant Anomaly

Unisolable steam line break outside containment with significant (greater than 10 gpm) primary to secondary leak rate.

(EAL Ref Manual 7C)

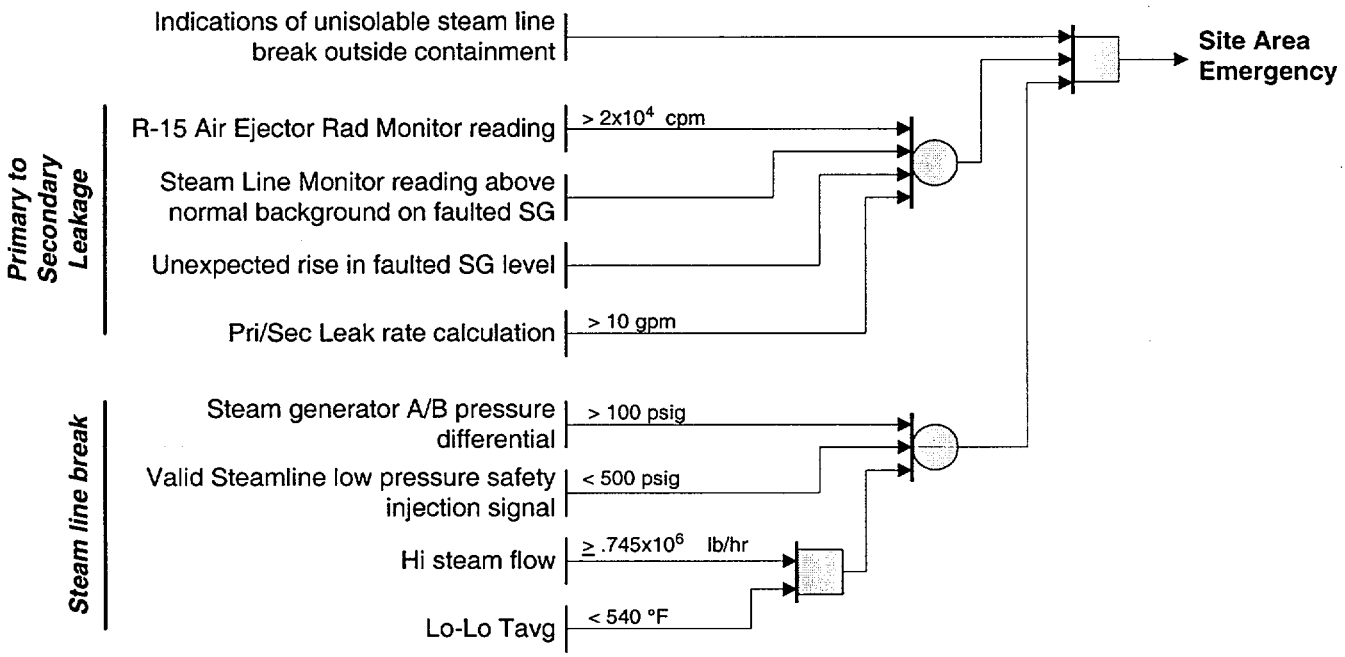

Condition 7 : Secondary Coolant Anomaly

Steam Line break in containment with greater than 50 gpm primary to secondary leakage and indication of fuel damage.

(EAL Ref Manual 7D)

Note:	If steam line break is outside containment with SG tube rupture and fuel failure, this may be a General Emergency . See condition # 6, case 2

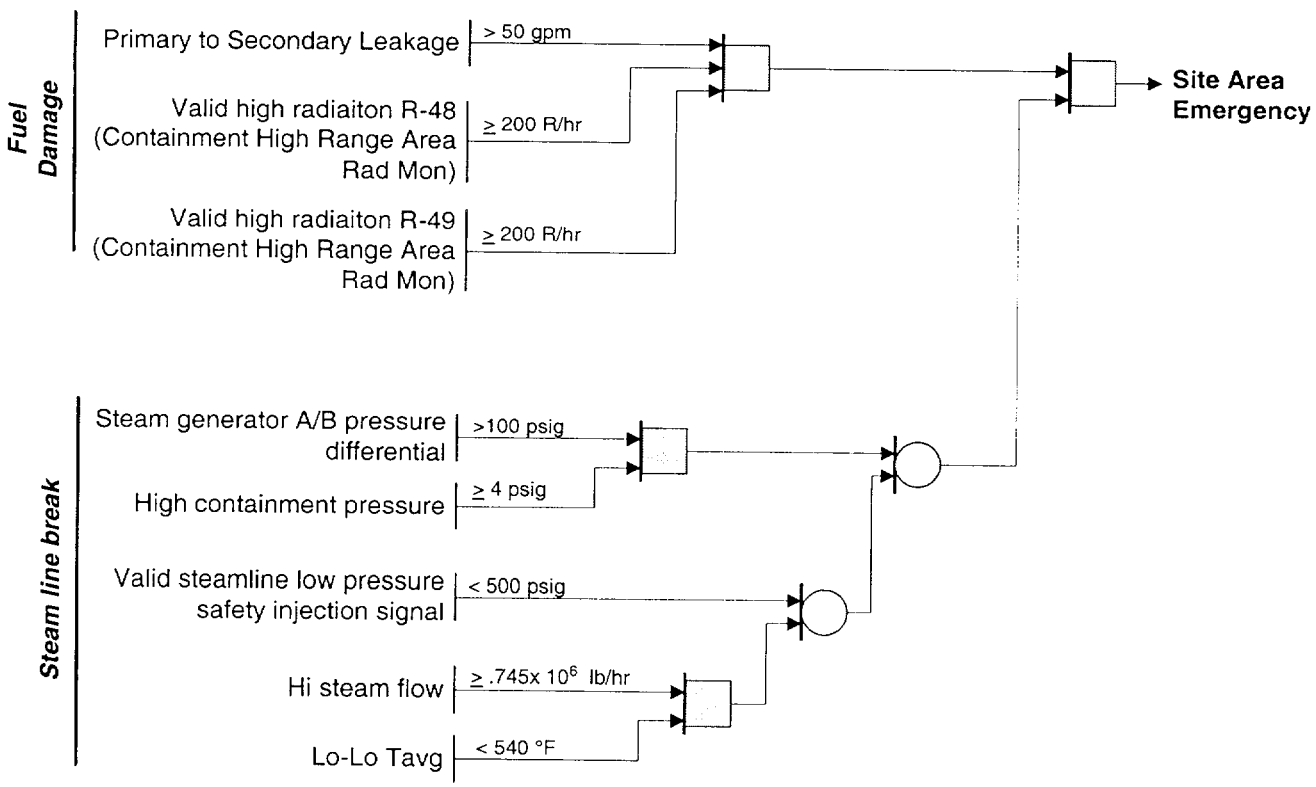

Condition 7 : Secondary Coolant Anomaly

Transient initiated by loss of feedwater and condensate systems (principal heat removal system) followed by failure of emergency feedwater system for extended period. Core melting possible in several hours. Ultimate failure of containment likely if core melts.

(EAL Ref Manual 7E)

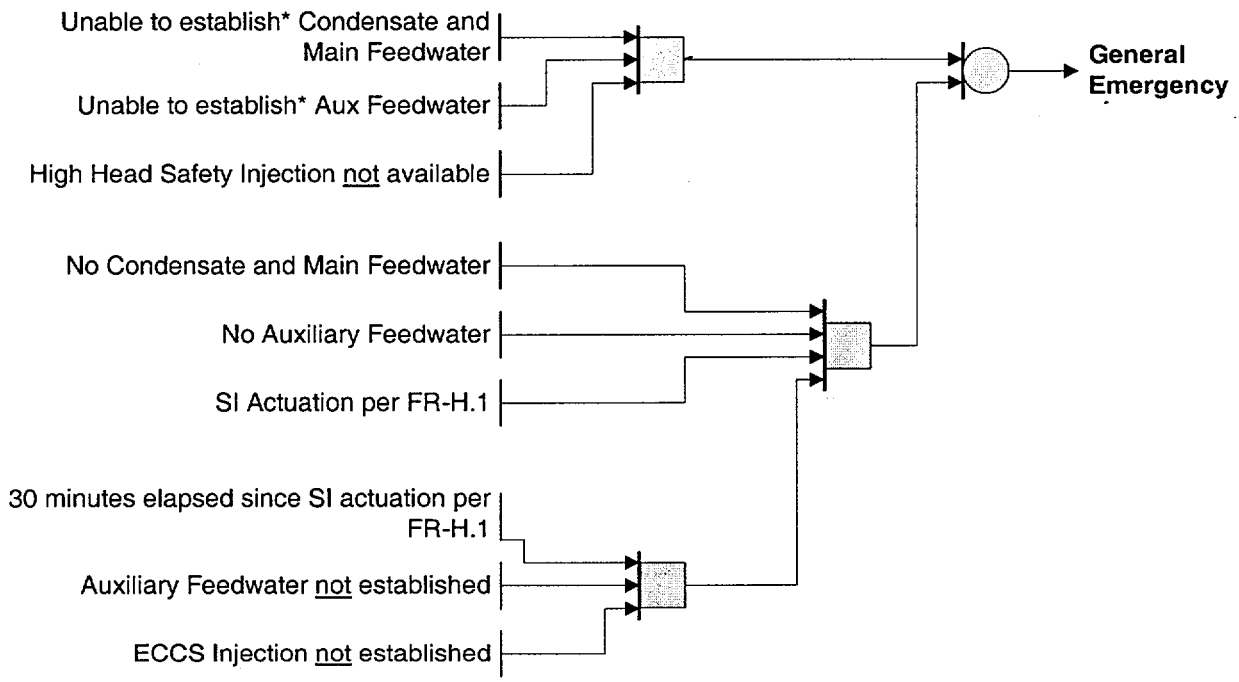

Note:
* "Unable to establish" criteria met if procedural attempt to establish condition has been made, but was unsuccessful or if an attempt cannot be made.

Condition 8 : Radiological Effluents

Airborne Radiological effluent Technical Specifications exceeded

(EAL Ref Manual 8A)

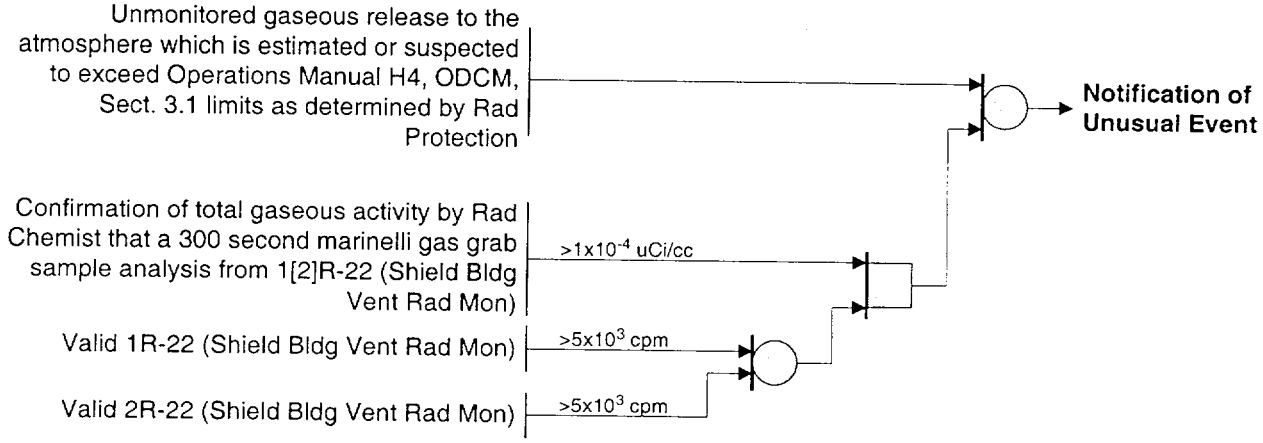

Liquid Radiological effluent Technical Specification limits exceeded.

(EAL Ref Manual 8B)

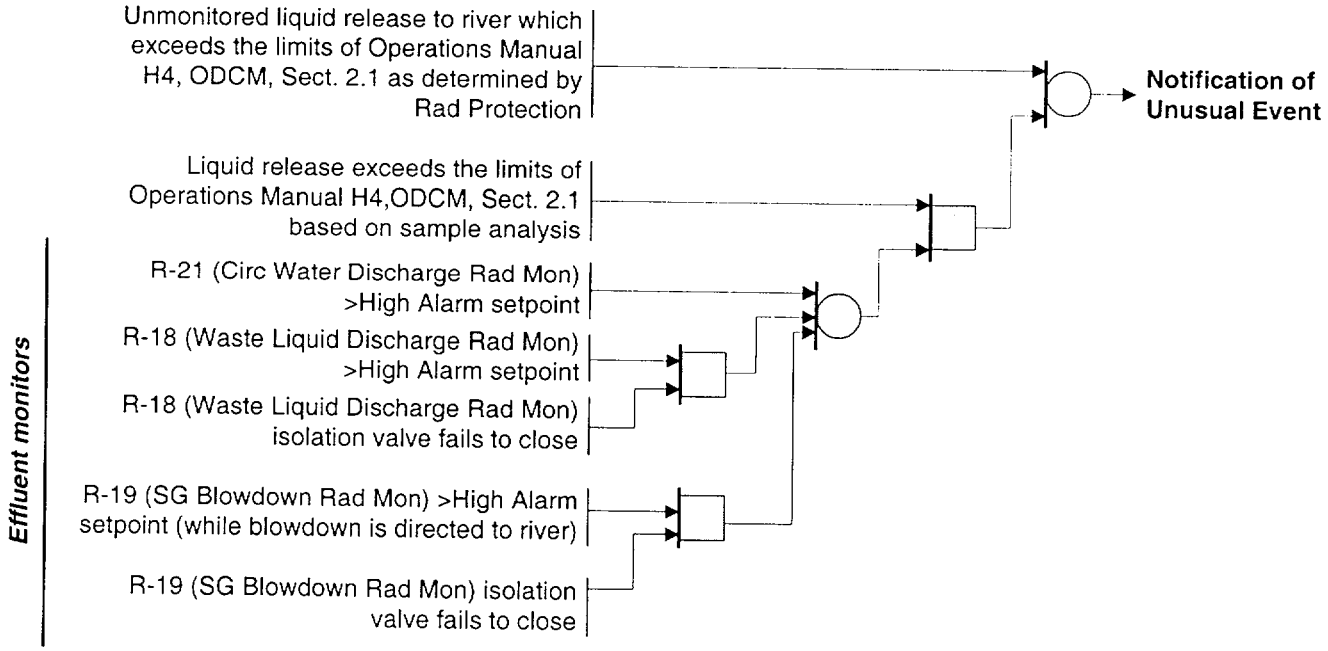

Condition 8 : Radiological Effluents

Liquid Radiological effluent greater than ten times Technical Specification limits.

(EAL Ref Manual 8C)

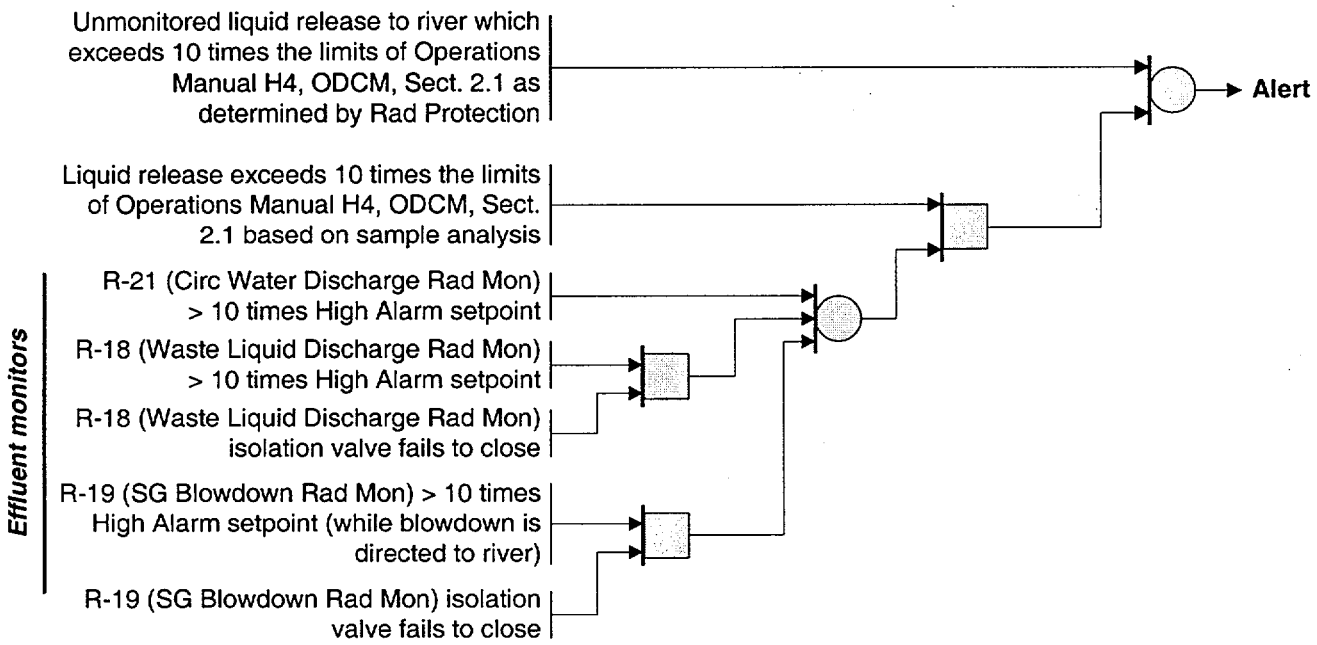

Airborne Radiological effluents greater than ten times Technical Specification instantaneous limits (an instantaneous rate which, if continued for over two hours, would result in about 1 mrem TEDE at the site boundary under average met conditions. TEDE = Total Dose Equivalent).

(EAL Ref Manual 8D)

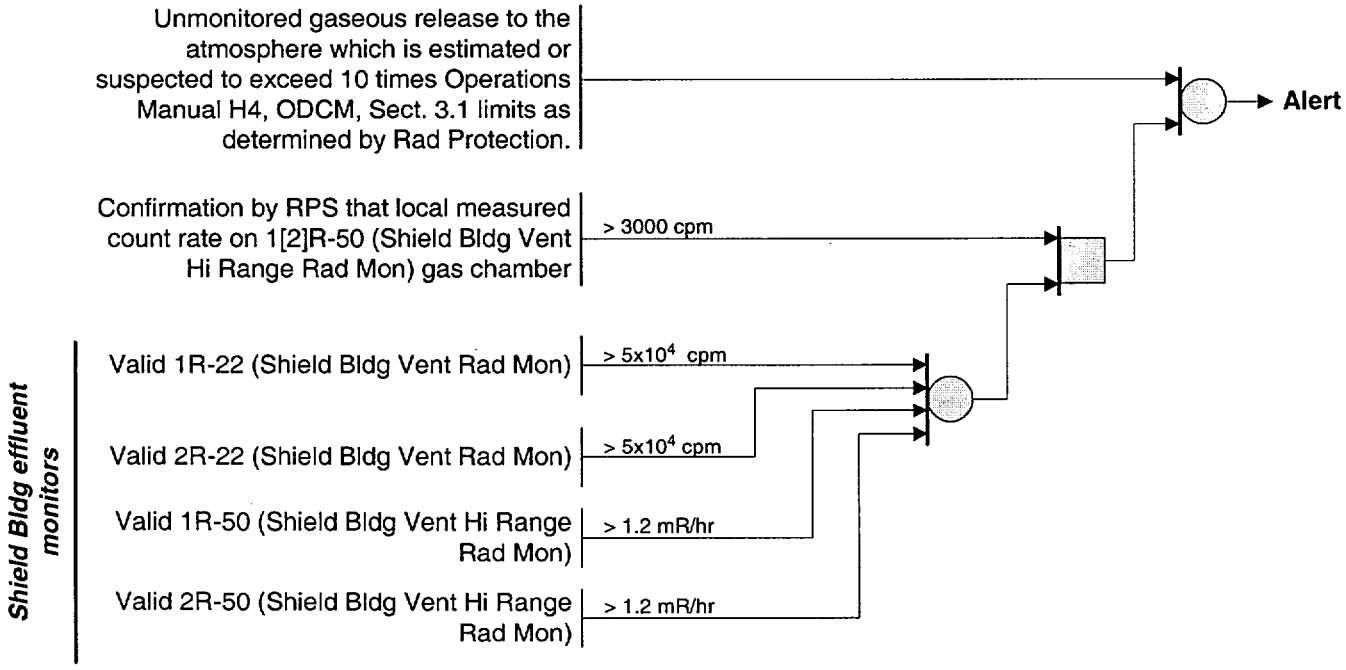

Condition 8 : Radiological Effluents

Airborne Effluent monitors detect levels corresponding to greater than:

1. **50 mrem/hr TEDE for one-half hour, or**
2. **250 mrem/hr Thyroid CDE for one-half hour, or**
3. **500 mrem/hr TEDE for two minutes, or**
4. **2500 mrem/hr Thyroid CDE for two minutes**

at the site boundary for adverse meteorology.

TEDE = Total Effective Dose Equivalent.
CDE = Committed Dose Equivalent.

(EAL Ref Manual 8E)

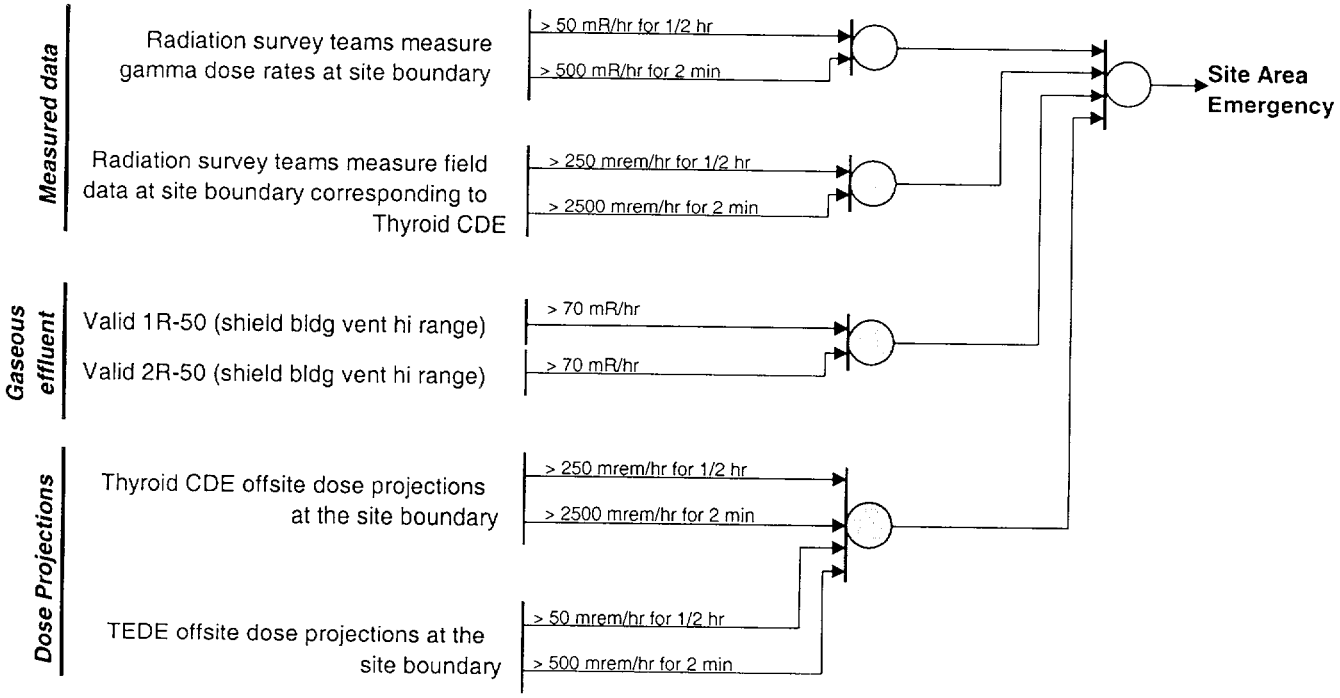

Condition 8 : Radiological Effluents

Effluent monitors detect levels corresponding to:

1. 1 rem/hr TEDE, or

2. 5 rem/hr Thyroid CDE

at the site boundary under actual meteorological conditions.

TEDE = Total Effective Dose Equivalent.
CDE = Committed Dose Equivalent.

(EAL Ref Manual 8F)

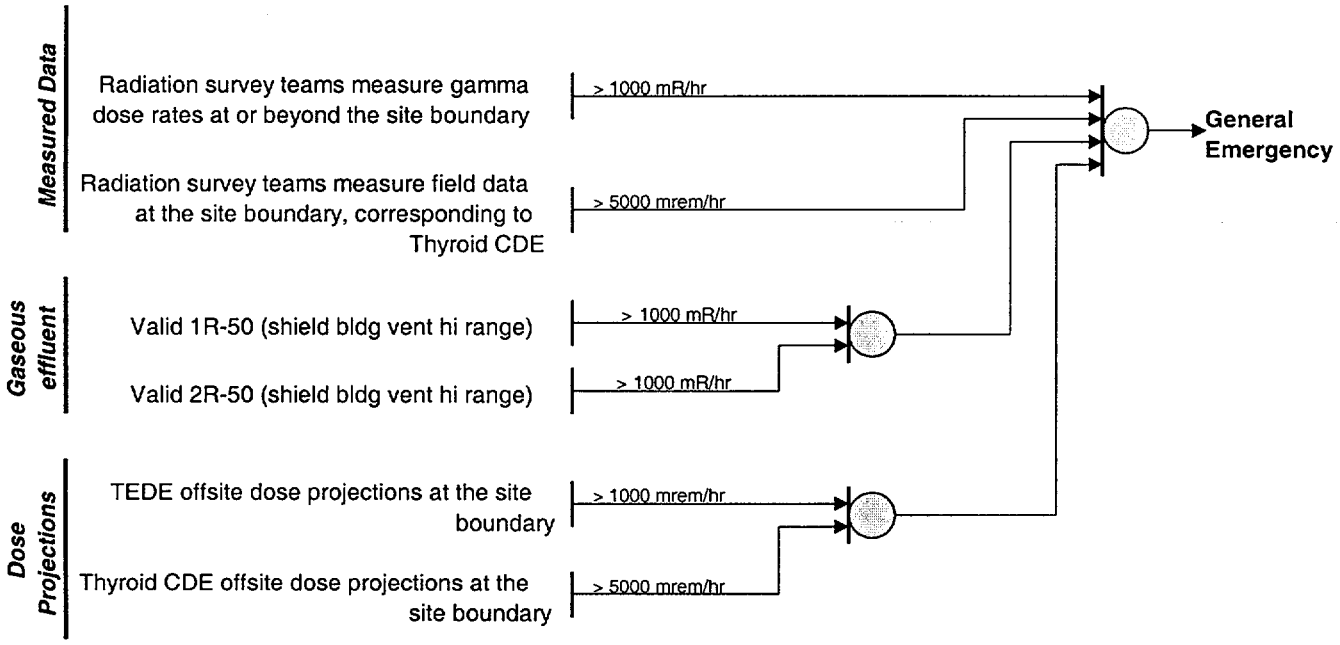

Condition 8 : Radiological Effluents

Radiation levels or airborne contamination which indicate a severe degradation in the control of radioactive materials (e.g., increase of factor of 1000 in direct radiation readings within facility).

(EAL Ref Manual 8G)

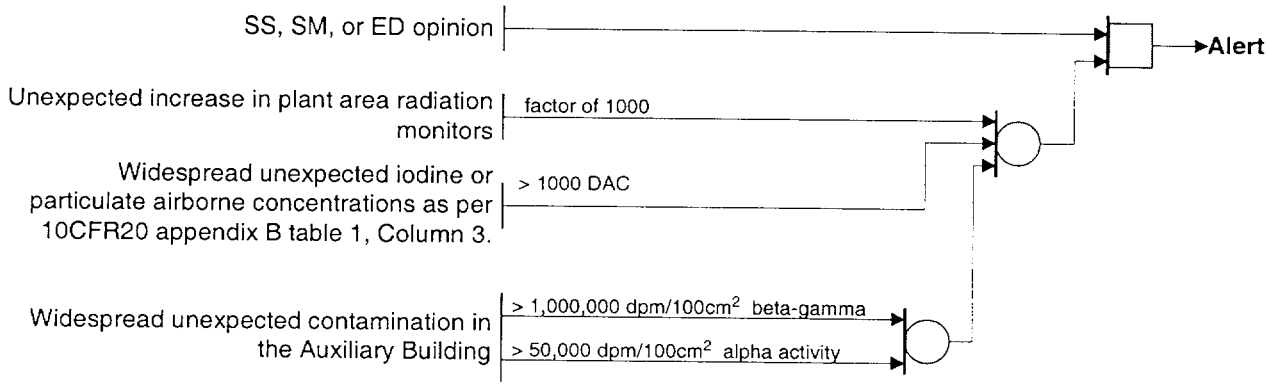

Condition 9 : Major Electrical Failures

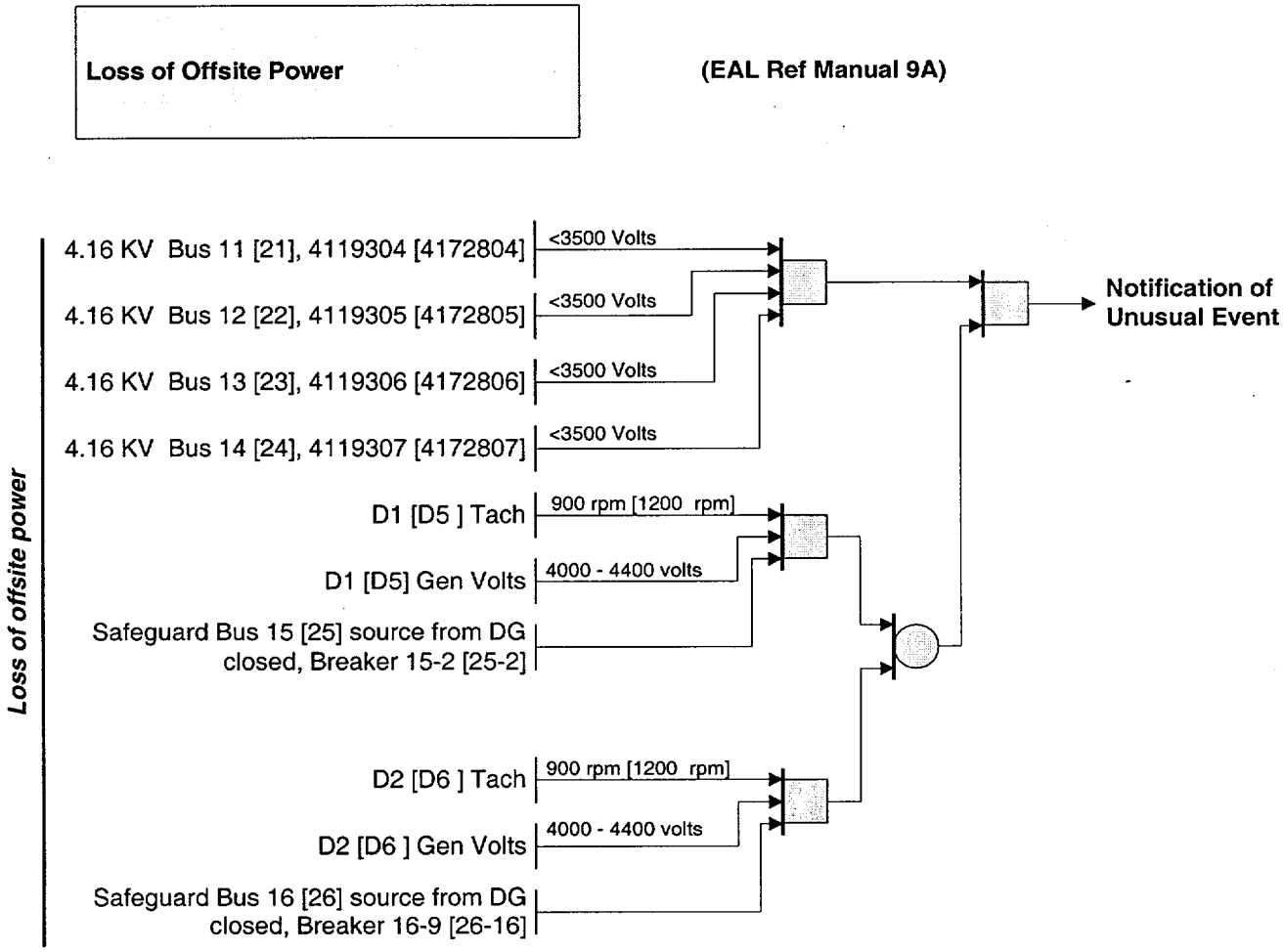

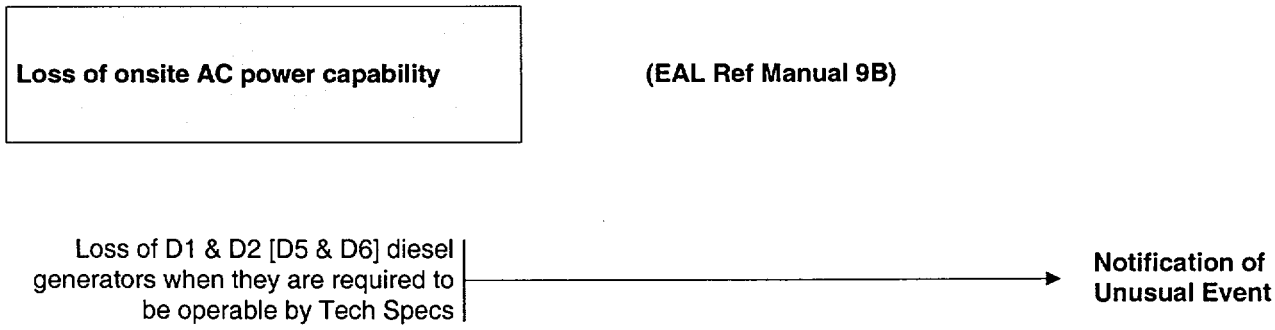

Condition 9 : Major Electrical Failures

Loss of offsite power and loss of all onsite AC power (See Site Area Emergency for extended loss).

(EAL Ref Manual 9C)

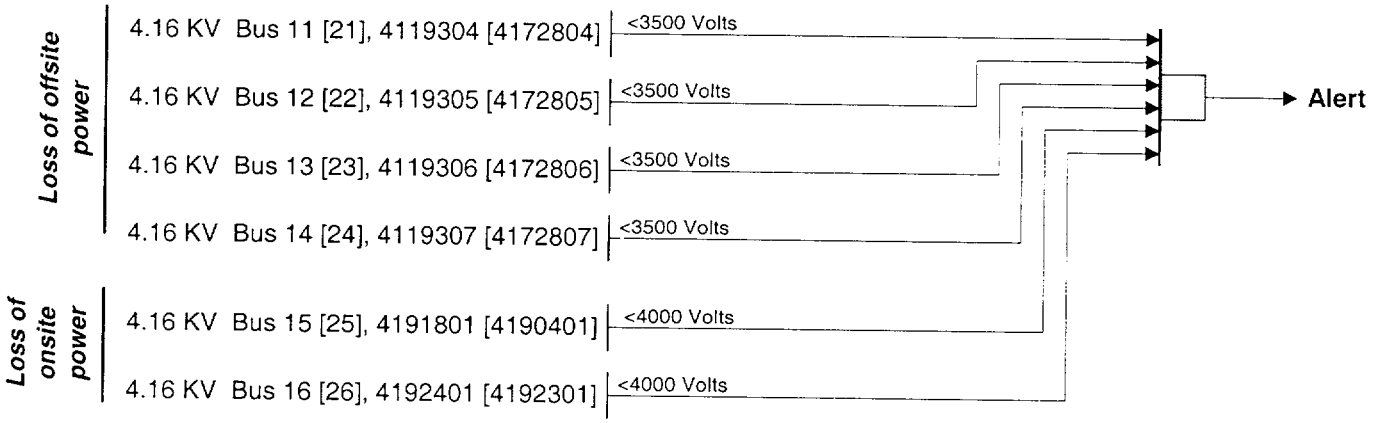

Loss of offsite power and loss of onsite AC power for more than 15 minutes.

(EAL Ref Manual 9D)

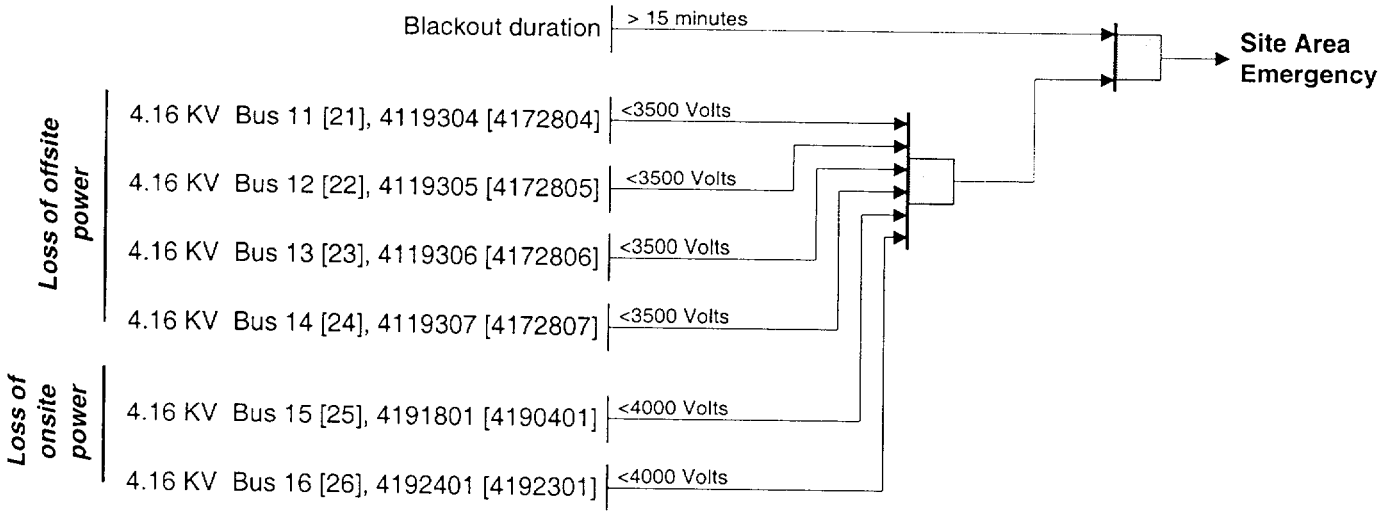

Condition 9 : Major Electrical Failures

Failure of offsite and onsite power along with total loss of emergency feedwater makeup capability for greater than 2 hours. This would lead to eventual core melt and likely failure of containment.

(EAL Ref Manual 9E)

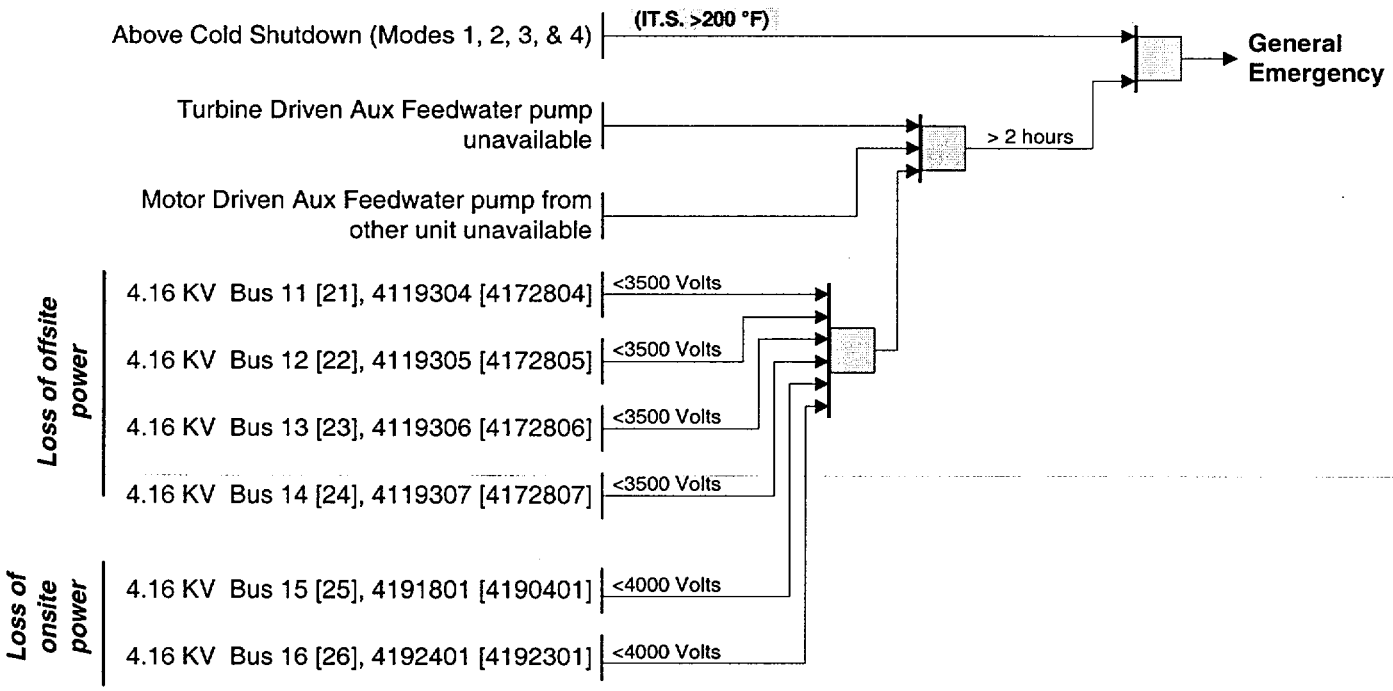

Condition 9 : Major Electrical Failures

Loss of all onsite DC power (see Site Area Emergency for extended loss).

(EAL Ref Manual 9F)

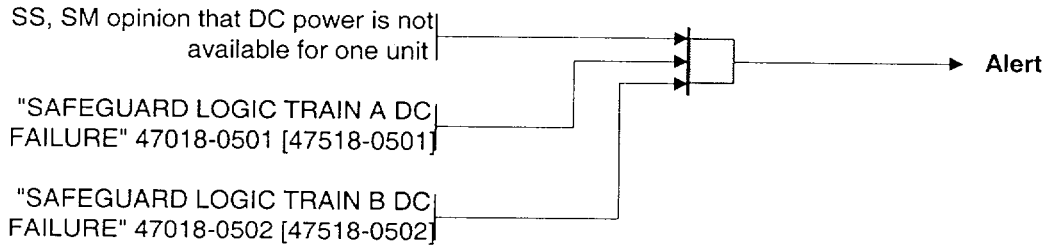

Loss of all vital onsite DC power for more than 15 minutes

(EAL Ref Manual 9G)

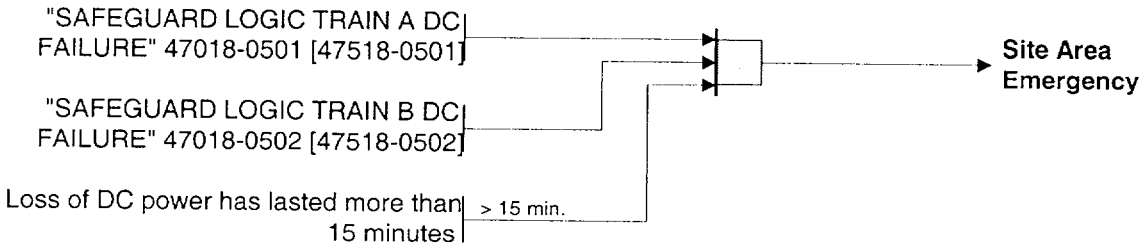

Condition 10 : Control Room Evacuations

Evacuation of the Control Room anticipated or required with control of shutdown systems established from Hot Shutdown Panels and local stations.

(EAL Ref Manual 10A)

SS,SM, or ED determines evacuation of Control Room is anticipated or required with control of shutdown systems established from Hot shutdown Panels and local stations → **Alert**

Note:	If reason for evacuation is fire in Control Room or Relay Room, see initiating condition 11C, "Fire compromising the functions of safety systems" for possible reclassification.

Evacuation of the Control Room and control of shutdown systems <u>not</u> established from hot shutdown panel and local stations within 15 minutes.

(EAL Ref Manual 10B)

Evacuation of Control Room conducted

Control of shutdown systems <u>not</u> established from Hot Shutdown Panels and local stations within 15 minutes → >15 min.

→ **Site Area Emergency**

Condition 11 : Fires

Fire within the plant or ISFSI lasting more than 10 minutes.

(EAL Ref Manual 11A)

Note:	FIRE: is combustion characterized by heat and light (flame). Sources of smoke such as slipping drive belts or overheated electrical equipment do not constitute fires. Observation of flame is preferred but is NOT required if large quantities of smoke and heat are observed.

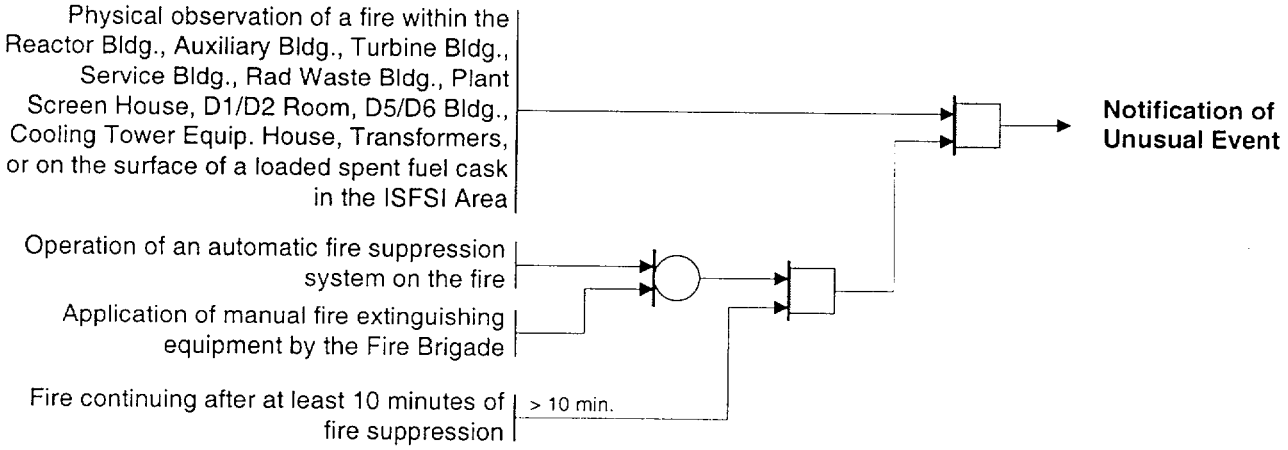

Fire potentially affecting safety systems.

(EAL Ref Manual 11B)

Note:	FIRE: is combustion characterized by heat and light (flame). Sources of smoke such as slipping drive belts or overheated electrical equipment do not constitute fires. Observation of flame is preferred but is NOT required if large quantities of smoke and heat are observed.

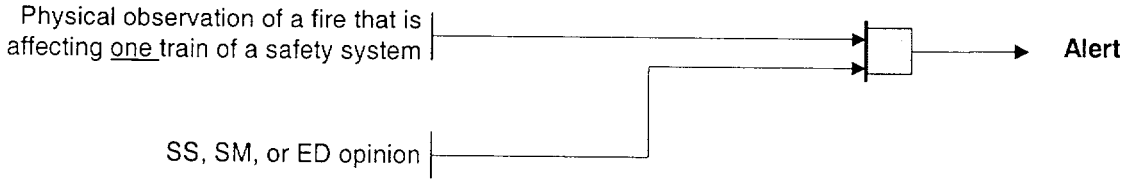

Condition 11 : Fires

Fire compromising the functions of safety systems.	**(EAL Ref Manual 11C)**

Note:	FIRE: is combustion characterized by heat and light (flame). Sources of smoke such as slipping drive belts or overheated electrical equipment do not constitute fires. Observation of flame is preferred but is NOT required if large quantities of smoke and heat are observed.

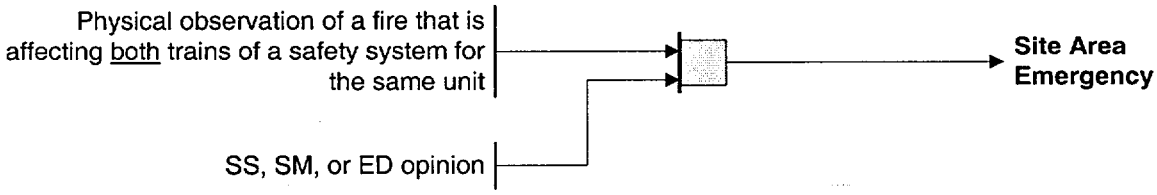

Condition 12 : Plant Shutdown Functions

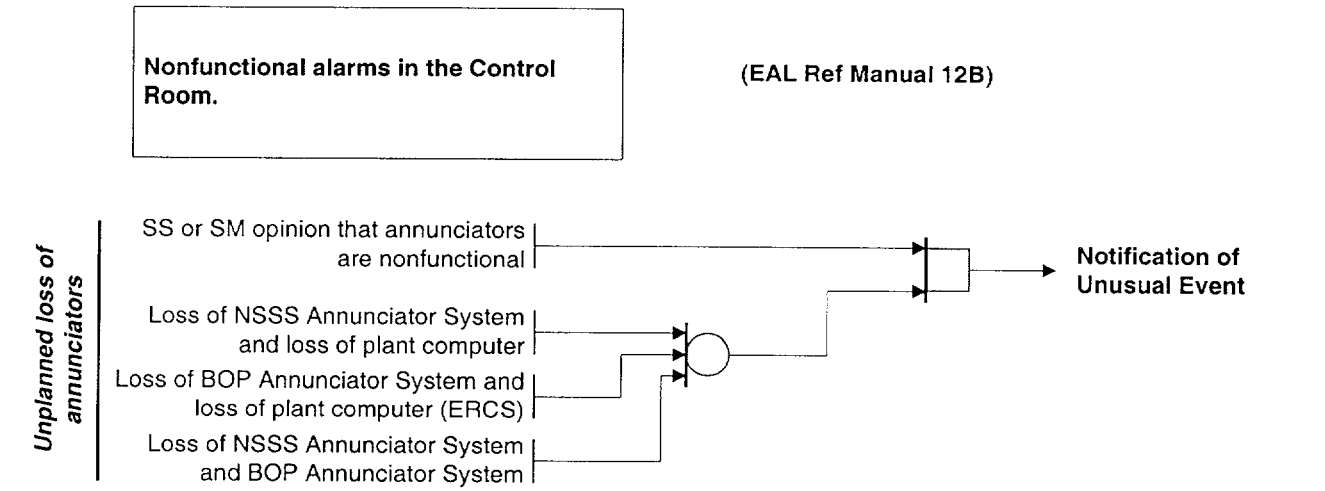

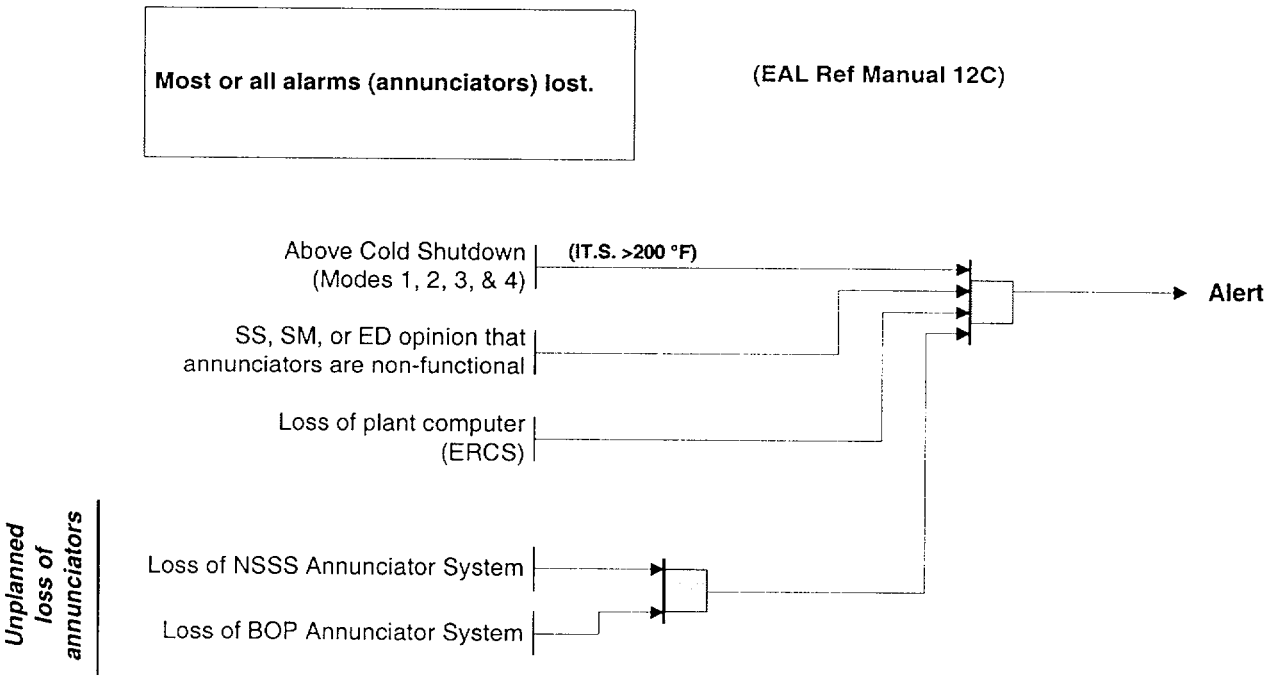

Condition 12 : Plant Shutdown Functions

Most or all alarms (annunciators) lost and plant transient initiated or in progress.

(EAL Ref Manual 12D)

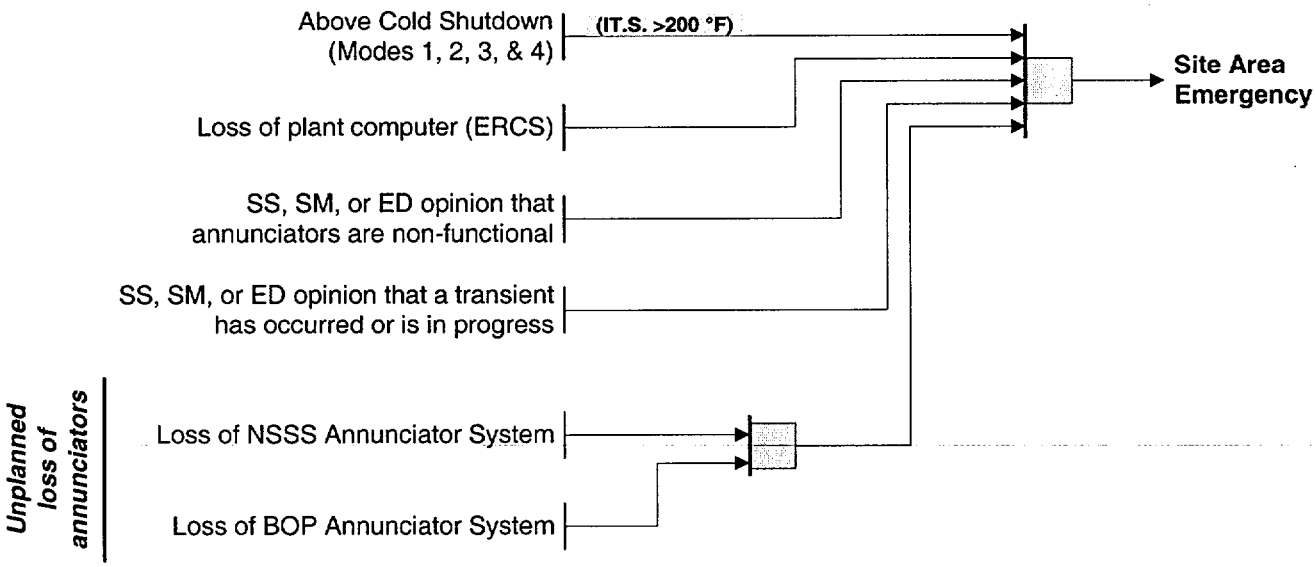

Condition 12 : Plant Shutdown Functions

Momentary loss of core cooling needed for plant Cold Shutdown.

(EAL Ref Manual 12E)

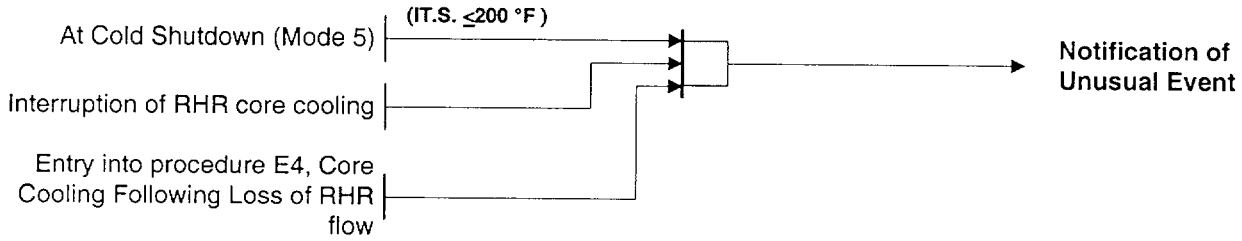

Inability to maintain plant in Cold Shutdown.

(EAL Ref Manual 12F)

Loss of water level that has uncovered or will uncover the fuel in the reactor vessel while at Cold Shutdown.

(EAL Ref Manual 12G)

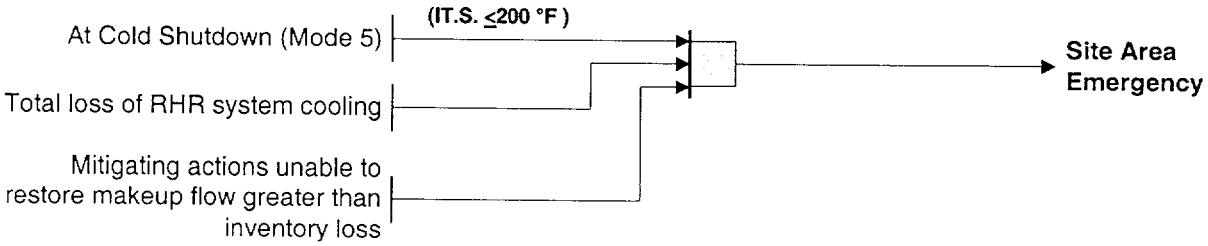

Condition 12 : Plant Shutdown Functions

Complete loss of any function needed for plant Hot Shutdown. (Also see Condition #7 for possible General if feed and bleed is initiated).

(EAL Ref Manual 12H)

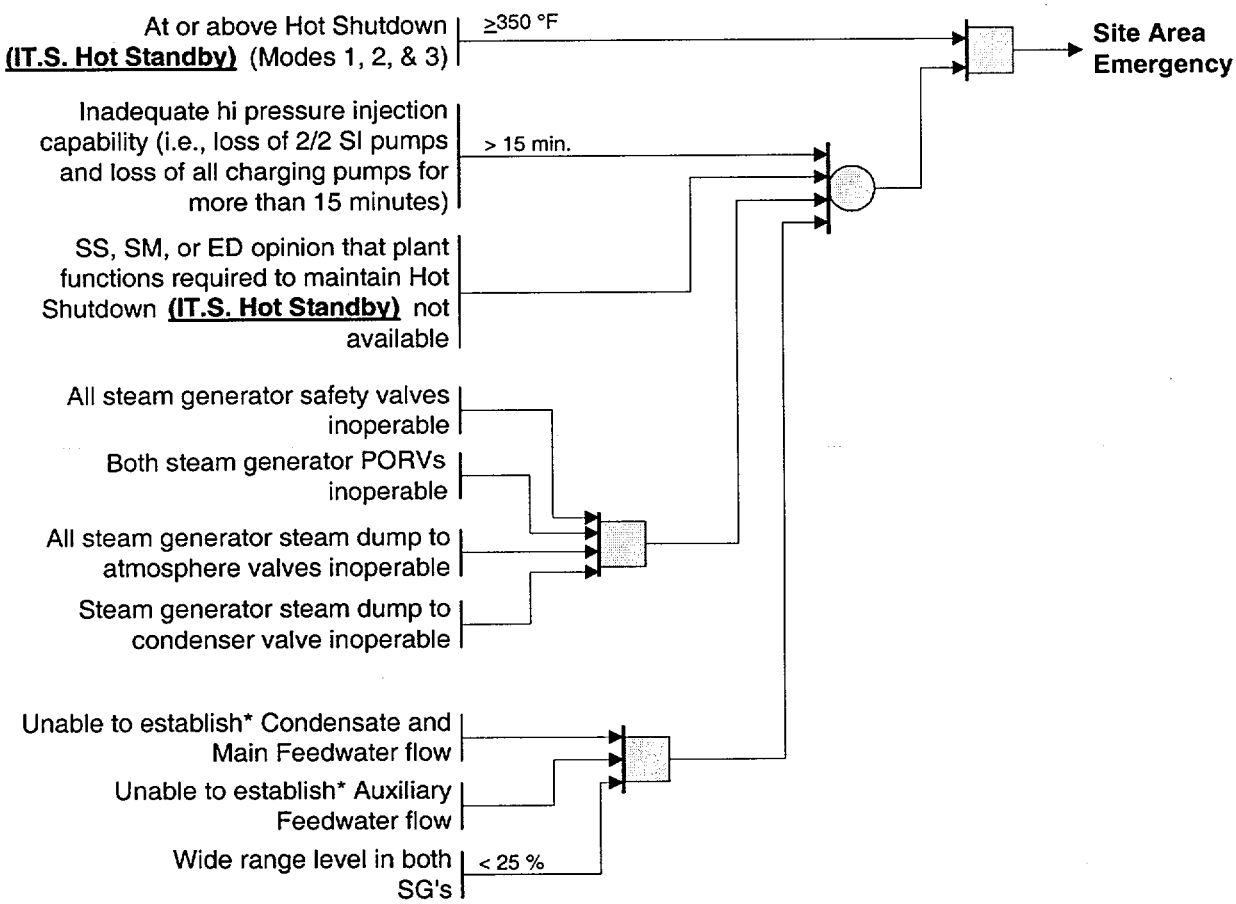

Note:
* "Unable to establish" criteria met if procedural attempt to establish condition has been made, but was unsuccessful or if an attempt cannot be made.

Condition 12 : Plant Shutdown Functions

Turbine failure requiring a reactor / turbine trip.

(EAL Ref Manual 12I)

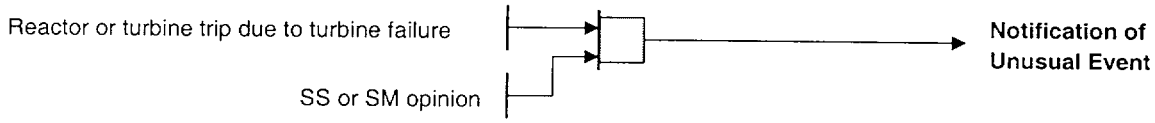

Turbine failure causing casing penetration.

(EAL Ref Manual 12J)

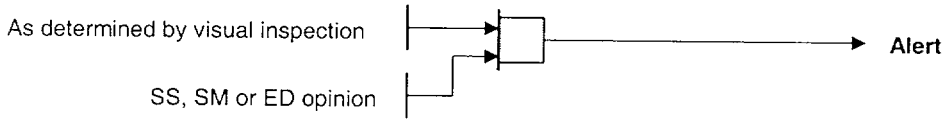

Condition 12 : Plant Shutdown Functions

Failure of the reactor protection system to initiate and complete a trip which brings the reactor subcritical.

(EAL Ref Manual 12K)

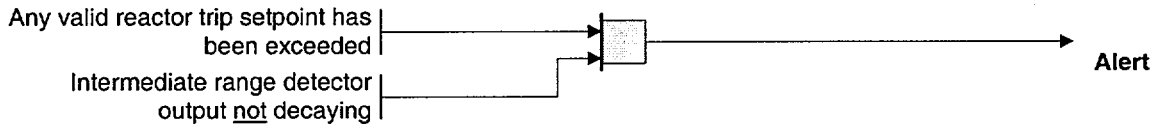

Transient requiring operation of shutdown systems with failure to trip (continued power generation but no core damage immediately evident).

(EAL Ref Manual 12L)

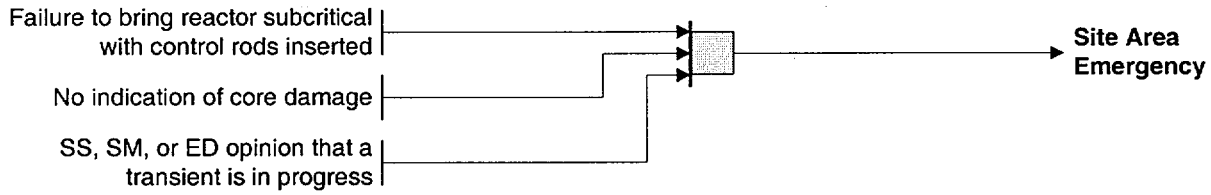

Transient requiring operation of shutdown systems with failure to trip which results in core damage or additional failure of core cooling and makeup systems (which could lead to core melt).

(EAL Ref Manual 12M)

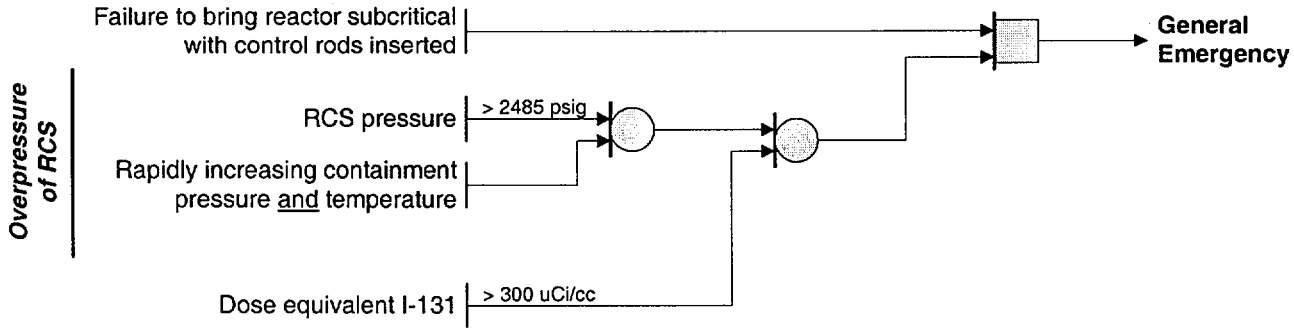

Condition 13 : Fuel Handling Accidents

Fuel damage accident with release of radioactivity to containment.

(EAL Ref Manual 13A)

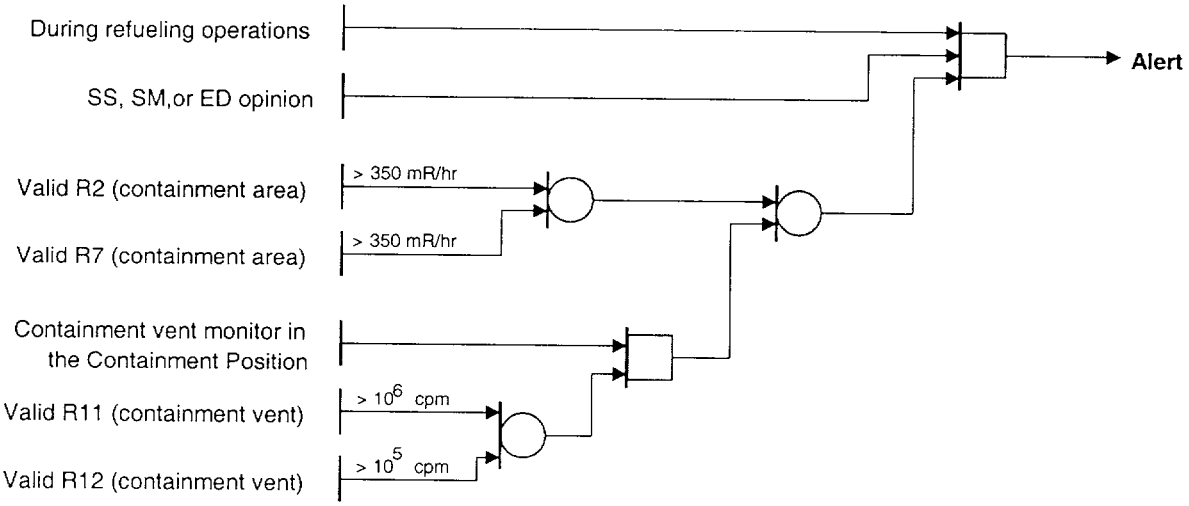

Fuel damage accident with release of radioactivity to the fuel handling building.

(EAL Ref Manual 13B)

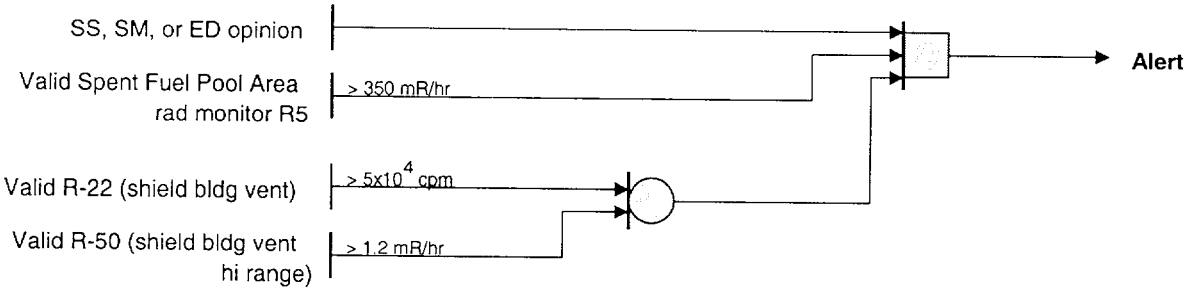

Condition 13 : Fuel Handling Accidents

Major damage to spent fuel in containment or fuel handling building (e.g., large object damages fuel or water loss below fuel level.

(EAL Ref Manual 13C)

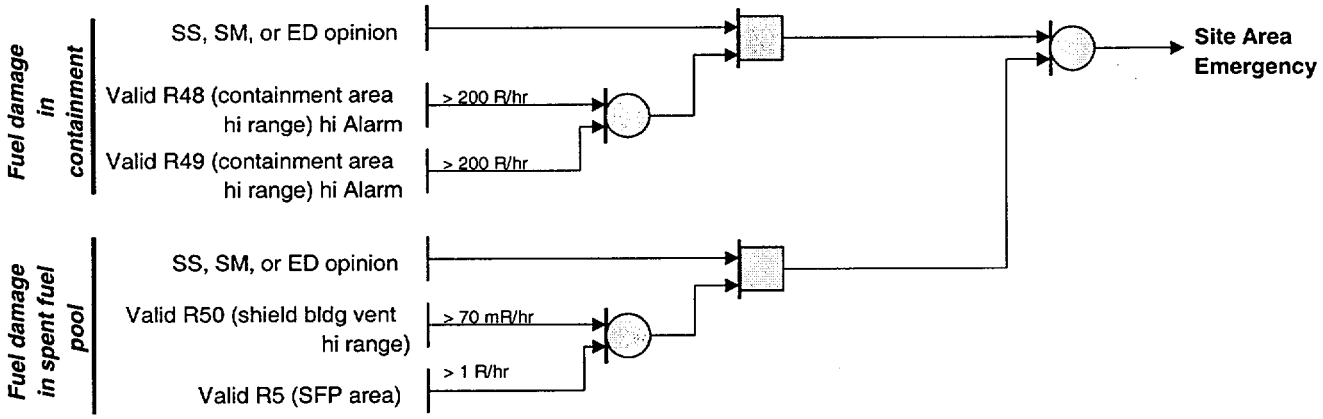

Condition 14 : Coolant Pump

DELETED

Deleted based on NRC Branch Position On Acceptable Deviation From Appendix 1 to NUREG-0654/FEMA-REP-1, July 11, 1994.

Condition 15 : Contaminated Injured Person

DELETED

Deleted based on NRC Branch Position On Acceptable Deviation From Appendix 1 to NUREG-0654/FEMA-REP-1, July 11, 1994.

Condition 16 : Security Threats

Security threat or attempted entry or attempted sabotage

(EAL Ref Manual 16A)

Security determines the threat to be credible and the threat would have an adverse impact on the safe operation or shutdown capability of the plant

Security discovers an unauthorized attempted entry by force or stealth (secret) into the plant's protected area

The FBI confirms that an act of attempted sabotage did occur to vital plant equipment or security equipment

Notification of Unusual Event

Ongoing security compromise

(EAL Ref Manual 16B)

Security Safeguards Contingency event that results in unauthorized personnel commandeering an area within the plant protected area, but not controlling shutdown capability or any vital areas

Bomb device discovered within plant protected area and outside of any vital area

Alert

Imminent loss of physical control of the plant

(EAL Ref Manual 16C)

Physical attack on the plant involving imminent occupancy of the Control Room, auxiliary shutdown panels or other vital areas

Bomb device discovered within a vital area

Site Area Emergency

Loss of physical control of the plant

(EAL Ref Manual 16D)

Physical attack on the plant has resulted in unauthorized personnel occupying the Control Room or any other vital areas

General Emergency

Condition 17 : Hazards to Plant Operations

Aircraft crash onsite or unusual aircraft activity over facility.

(EAL Ref Manual 17A)

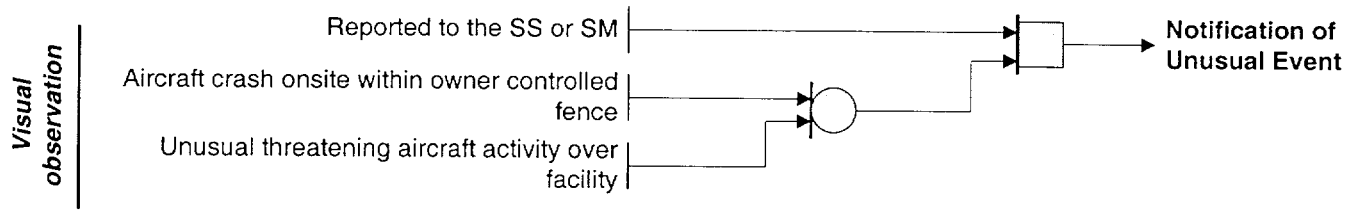

Aircraft crash in the protected area.

(EAL Ref Manual 17B)

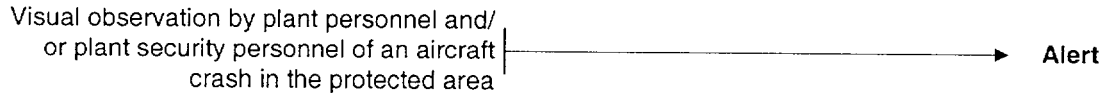

Aircraft crash within protected area and affecting vital structures by impact or fires with plant not in Cold Shutdown.

(EAL Ref Manual 17C)

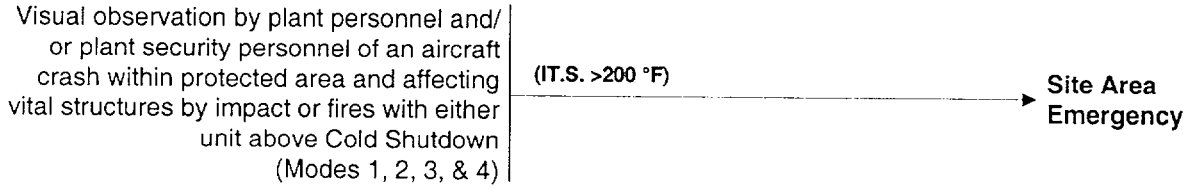

Condition 17 : Hazards to Plant Operations

Near or onsite explosion

(EAL Ref Manual 17D)

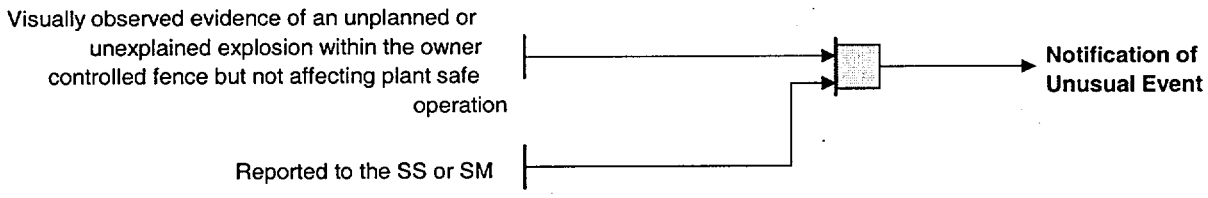

Known explosion damage to facility affecting plant operation

(EAL Ref Manual 17E)

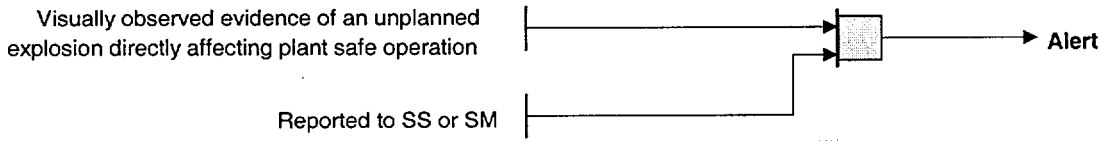

Condition 17 : Hazards to Plant Operations

Missile impacts from whatever source on facility

(EAL Ref Manual 17F)

Visually observed evidence by plant personnel and/or plant security personnel of missile impacts on facility from whatever source → **Alert**

Severe damage to safe shutdown equipment from missiles or explosion with plant not in Cold Shutdown

(EAL Ref Manual 17G)

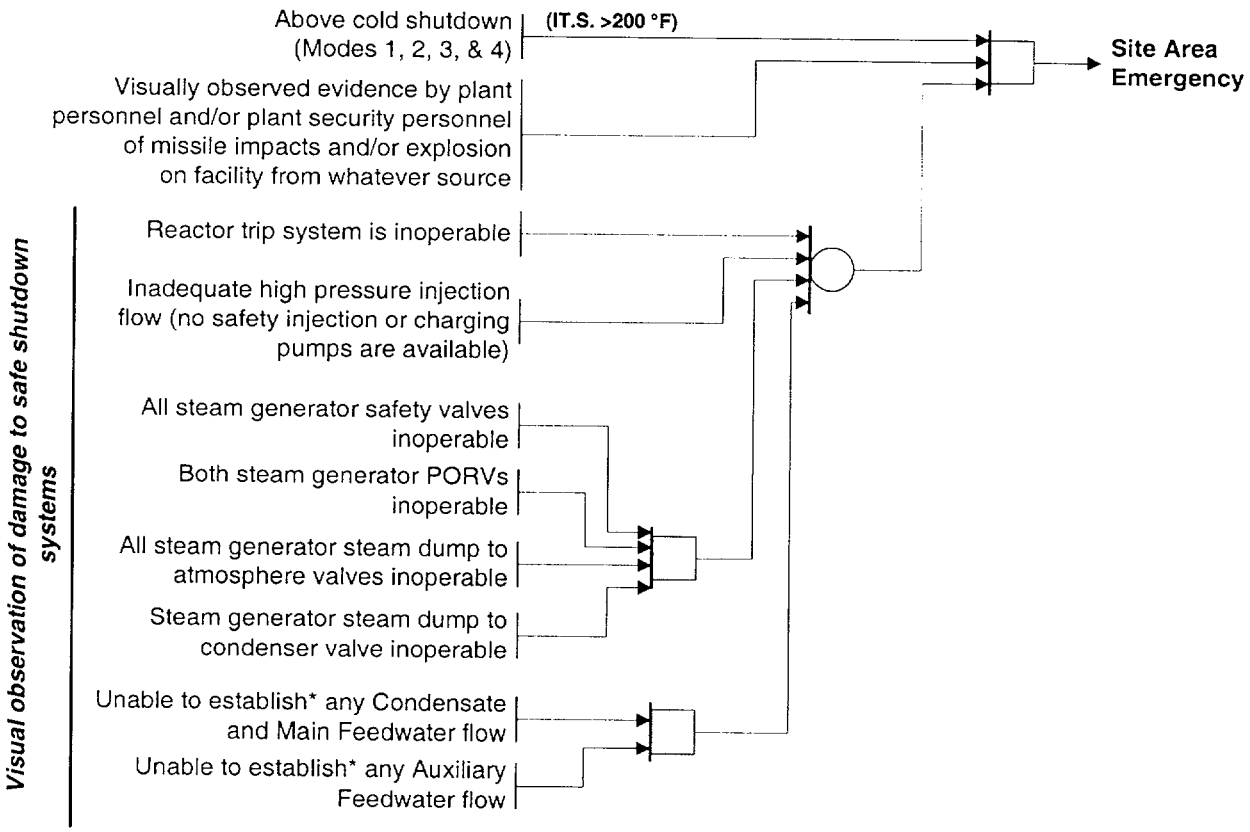

Note:
* "Unable to establish" criteria met if procedural attempt to establish condition has been made, but was unsuccessful or if an attempt cannot be made.

Condition 17 : Hazards to Plant Operations

Near or onsite toxic or flammable gas release

(EAL Ref Manual 17H)

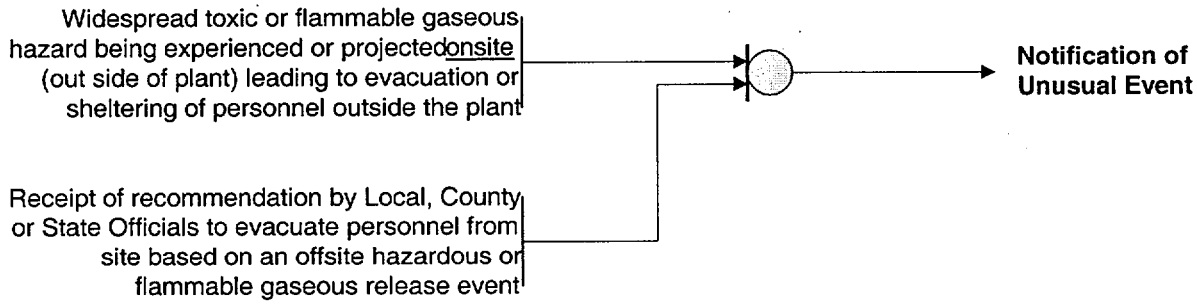

Entry into the plant environs of toxic or flammable gases

(EAL Ref Manual 17I)

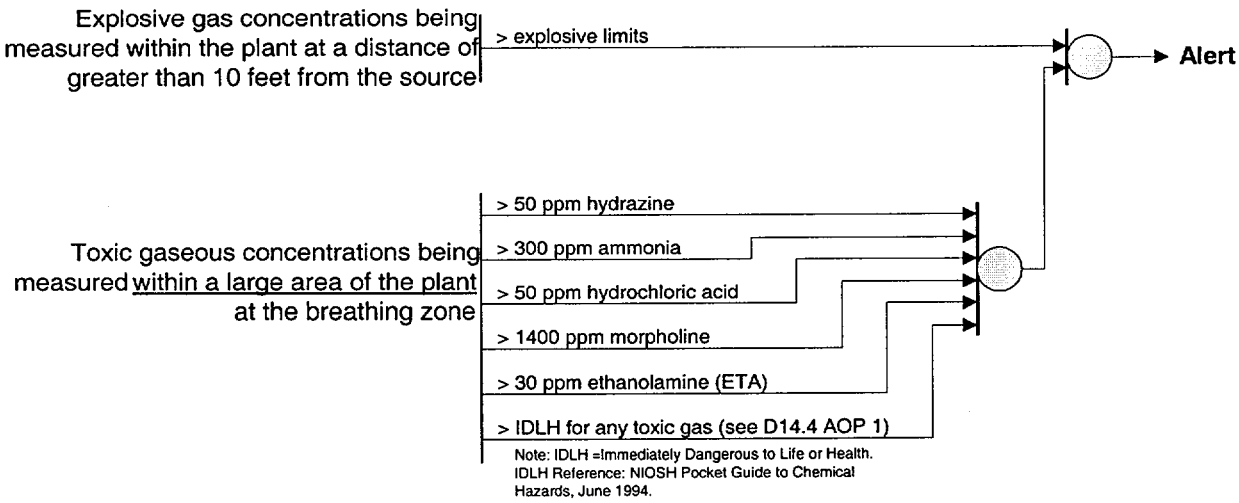

Condition 17 : Hazards to Plant Operations

Entry of toxic or flammable gases into vital areas with plant not in Cold Shutdown.

(EAL Ref Manual 17J)

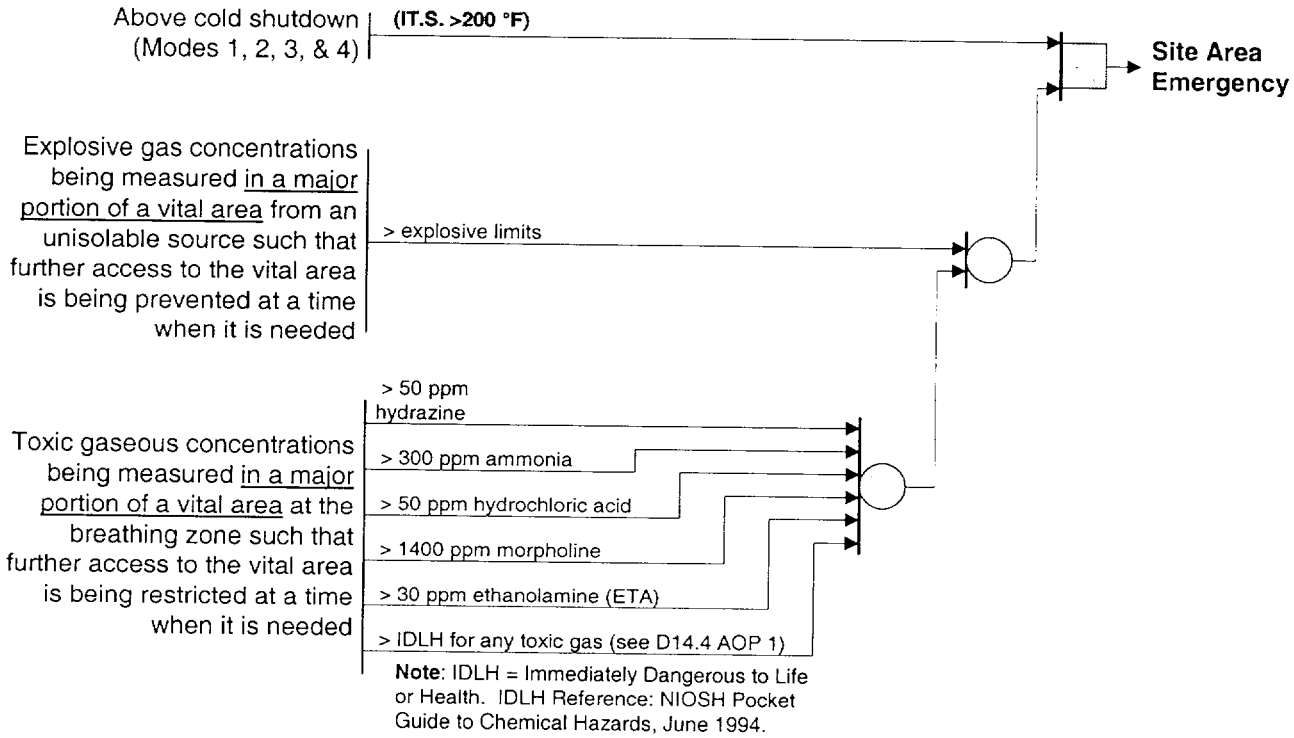

Note: IDLH = Immediately Dangerous to Life or Health. IDLH Reference: NIOSH Pocket Guide to Chemical Hazards, June 1994.

Condition 18 :ISFSI Events

ISFSI cask tip over or drop resulting in cask seal leakage

(EAL Ref Manual 18A)

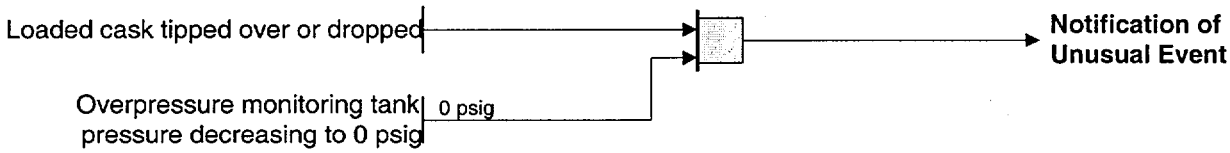

Loss of ISFSI cask/fuel containment barrier

(EAL Ref Manual 18B)

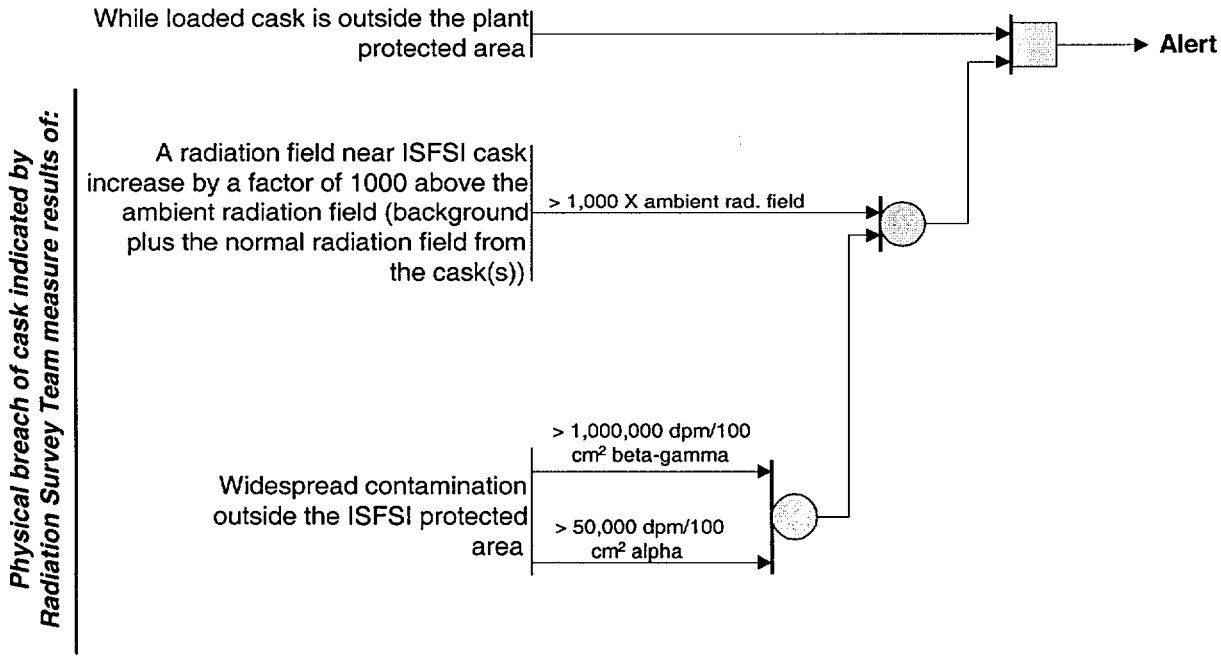

Condition 19 : Natural Events

Any confirmed earthquake

(EAL Ref Manual 19A)

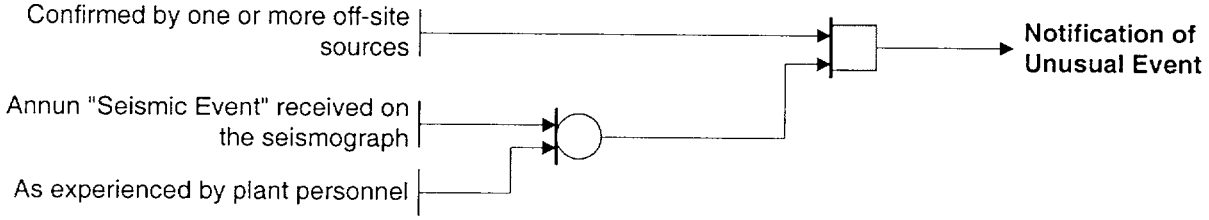

Earthquake greater than Operational Basis Earthquake

(EAL Ref Manual 19B)

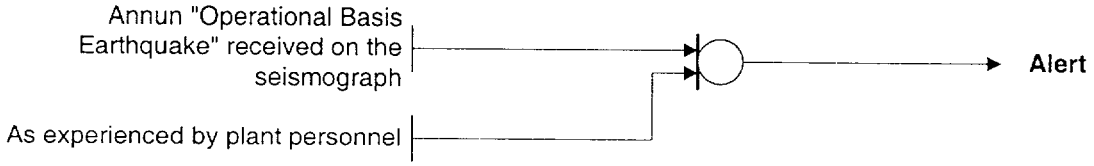

Earthquake greater than Design Basis Earthquake with plant not in Cold Shutdown

(EAL Ref Manual 19C)

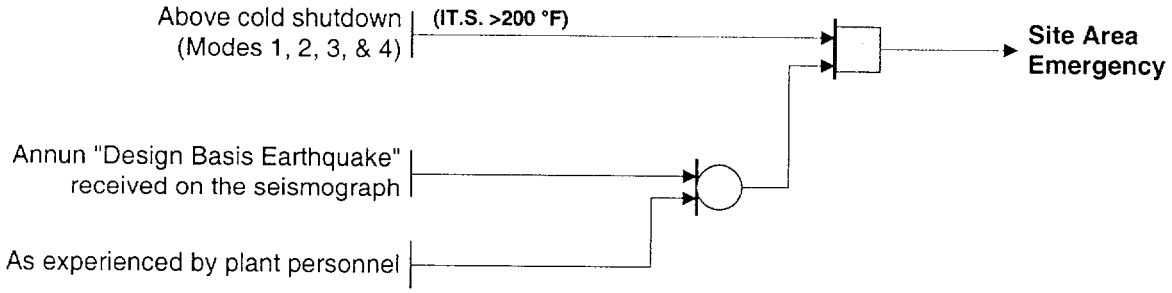

Condition 19 : Natural Events

Any tornado on site

(EAL Ref Manual 19D)

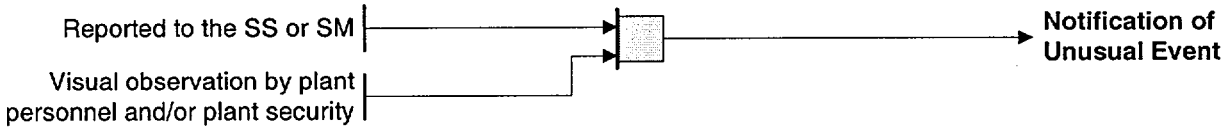

Any tornado striking the facility

(EAL Ref Manual 19E)

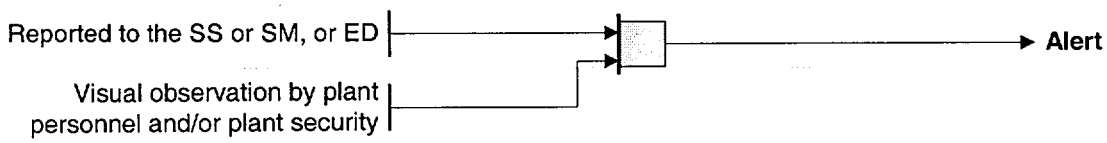

Condition 19 : Natural Events

50 Year Flood

(EAL Ref Manual 19F)

River Intake Elevation — > 686 ft → **Notification of Unusual Event**

Flood levels approaching design levels

(EAL Ref Manual 19G)

River Intake Elevation - (USAR 2.4.3.5) - requires both units to be shut down to Mode 2 or lower — > 692 ft → **Alert**

Flood levels exceeding design levels with plant not in cold shutdown

(EAL Ref Manual 19H)

Above Cold Shutdown (Modes 1, 2, 3, & 4) — **(IT.S. >200 °F)**

River Intake Elevation - Power operation design level (highest level transformers will function) — > 698 ft

→ **Site Area Emergency**

Condition 19 : Natural Events

Low water levels being experienced or projected beyond usual levels.

(EAL Ref Manual 19I)

River intake elevation (11/21 Cooling Water Pump - Low Water Level Trip) — < 672.5 ft → **Notification of Unusual Event**

Low water levels being experienced or projected to be near design levels.

(EAL Ref Manual 19J)

River intake elevation — < 669.5 ft → **Alert**

With plant <u>not</u> in Cold Shutdown, low water levels being experienced or projected to be less than design levels, or failure of vital equipment with low water level.

(EAL Ref Manual 19K)

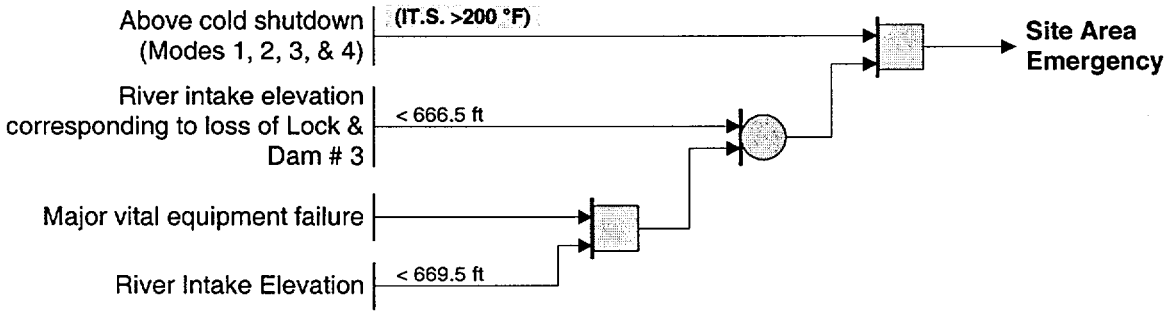

Condition 19 : Natural Events

Sustained winds being experienced or projected near design levels.

(EAL Ref Manual 19L)

Sustained wind speed indicated by met tower — > 90 mph → **Alert**

Sustained winds being in excess of design levels being experienced or projected with plant <u>not</u> in Cold Shutdown.

(EAL Ref Manual 19M)

Above cold shutdown (Modes 1, 2, 3, & 4) — (IT.S. >200 °F)

Sustained wind speed indicated by met tower — > 100 mph

→ **Site Area Emergency**

Any major internal or external events (e.g., fires, earthquake, substantially beyond design levels) which could or has caused massive damage to plant systems resulting or potential for resulting in large releases to the offsite environment in excess of the EPA Protective Action Guides.

(EAL Ref Manual 19N)

As determined by the SS, SM, or ED → **General Emergency**

Condition 20 : Other

Conditions that warrant increased awareness on the part of plant operation staff or state and/or local offsite authorities.

(EAL Ref Manual 20A)

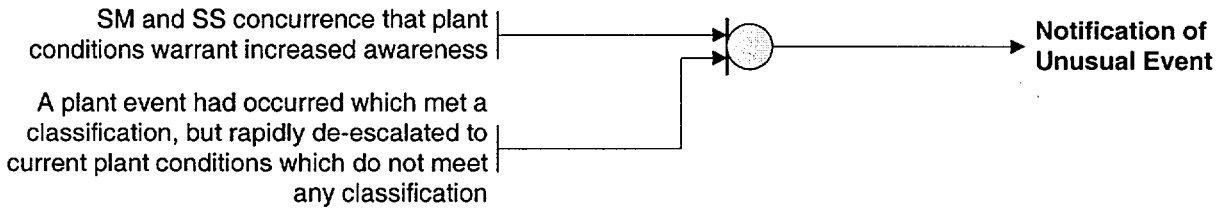

Inability to reach required shutdown within Technical Specification Limits.

(EAL Ref Manual 20B)

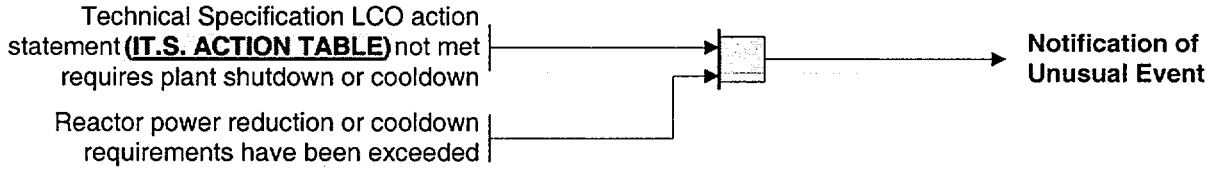

Conditions that involve other than normal controlled shutdown.

(EAL Ref Manual 20C)

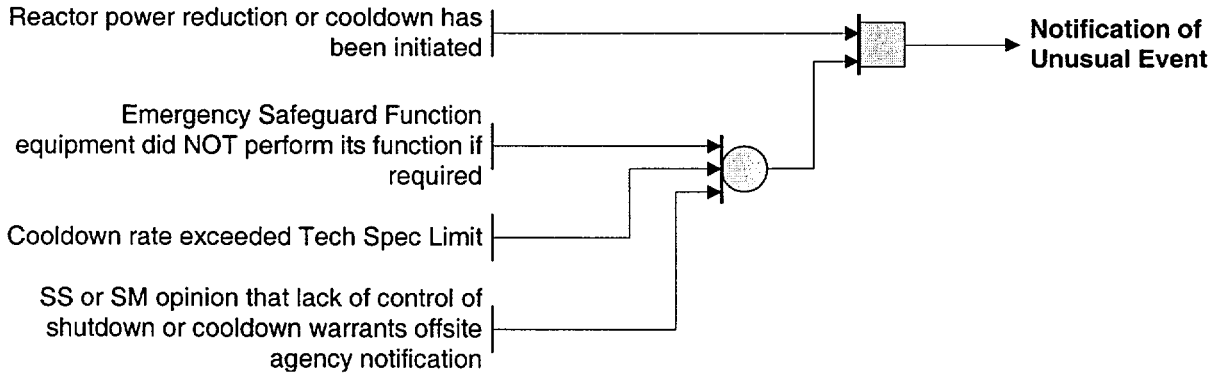

Condition 20 : Other

Conditions that warrant activation of Technical support Center and nearsite Emergency Operation Facility

(EAL Ref Manual 20D)

SS, SM, or ED opinion → **Alert**

Other plant conditions that warrant activation of emergency operation centers and monitoring teams or a precautionary notification to the public near the site

(EAL Ref Manual 20E)

SS, SM, or ED opinion → **Site Area Emergency**

Other plant conditions exist, from whatever source, that make release of large amounts of radioactivity in a short time period possible, e.g., any core melt situation

(EAL Ref Manual 20F)

SS, SM, or ED opinion → **General Emergency**

F3	RESPONSIBILITIES DURING A NOTIFICATION OF UNUSUAL EVENT	NUMBER: F3-3
		REV: 18

REFERENCE USE
• *Procedure segments may be performed from memory.*
• *Use the procedure to verify segments are complete.*
• *Mark off steps within segment before continuing.*
• *Procedure should be available at the work location.*

O.C. REVIEW DATE:	OWNER:	EFFECTIVE DATE
NR	M. Werner	4-15-02

1.0 PURPOSE

The purpose of this instruction is to delineate the responsibilities of various emergency organization personnel and onsite organizations required to respond to a Notification of Unusual Event.

2.0 APPLICABILITY

This instruction **SHALL** apply to all plant personnel.

3.0 PRECAUTIONS

3.1 All personnel should stay clear of any areas as announced over the public address system.

3.2 All personnel should refrain from using the public address system or telephone system during any emergency situation.

4.0 RESPONSIBILITIES

4.1 Overall Responsibility - Shift Manager

4.2 Assistance, Control Room - Shift Supervisors
Control Room Operators
TSC - Shift Emergency Communicator
Plant - Shift Radiation Protection Specialist

5.0 DISCUSSION

5.1 Notification of Unusual Event

5.1.1 Definition

Unusual Events are events that are in progress or have occurred which indicate a potential degradation of the level of safety of the plant.

No release of radioactive material requiring offsite response or monitoring is expected unless further degradation of safety systems occurs.

5.1.2 Purpose of the Notification of Unusual Event Class

The purpose of the Notification of Unusual Event Emergency classification is to:

A. Have the operating staff come to a state of readiness from the standpoint of emergency response in the event the handling of the initial condition needs to be escalated to a more severe action level class;

B. Provide for systematic handling of Unusual Event information.

5.1.3 Plant Actions & Responsibilities:

A. Promptly inform State and/or local offsite authorities of nature of unusual condition as soon as discovered.

B. Assess and respond to Unusual Event.

C. Augment on-shift resources (if needed). This may involve full activation of the Emergence Response Organization depending on plant management discretion.

D. Activate the Technical Support Center, if needed. Working in the TSC may enhance the plant technical support assessment and response.

E. Close out with verbal summary to offsite authorities.

<u>OR</u>

F. Escalate to a more severe class.

5.1.4 State and/or local offsite authority actions:

A. Provide fire or security assistance if required.

B. Standby until verbal closeout.

<u>OR</u>

C. Escalate to a more severe class.

6.0 PREREQUISITES

An Unusual Event has been or will be declared.

7.0 PROCEDURE

7.1 Shift Supervisors

7.1.1 Shift Supervisor of affected unit:

A. Proceed to the Control Room (if not already there).

NOTE:	**The affected unit Shift Supervisor SHALL remain in the Control Room at all times during accident conditions until properly relieved.**

B. If needed, ensure that applicable Emergency Operating Procedures (EOPs) are implemented to respond to the Notification of Unusual Event conditions with the objective of returning the plant to a normal, safe condition (Mode 5, Cold Shutdown, if necessary).

NOTE:	**The Shift Manager and SEC will be summoned to the Control Room per the EOPs.**

C. Direct activities of the Control Room Operators.

7.1.2 Shift Supervisor of unaffected unit:

A. Proceed to the Control Room (if not already there).

B. Direct operations on the unaffected unit.

C. Assist the Shift Manager, as necessary.

7.2 Shift Manager

NOTE:	**The initial E-Plan response to the event should be made by the Shift Manager. However, in order to adequately maintain oversight of the operational aspects of the event, it may be necessary for the Shift Manager to delegate specific E-Plan duties to the unaffected unit SS during the initial response while still maintaining overall authority and control.**

7.2.1 Report to the Control Room immediately upon notification.

7.2.2 Assess the emergency condition, event evaluation, and safety related aspects of the plant.

NOTE:	**It is recommended that the Shift Manager stands at the Reactor Operator's desk to hear key communications, use an ERCS terminal for monitoring Critical Safety Function Status Trees (CSFSTs), and solicit or answer questions of the SS.**

7.2.3 Use PINGP 1125, "Shift Manager/Shift Supervisor Emergency Director Checklist," for specific guidance on emergency plan NUE duties ("Example Only" copy of PINGP 1125 is attached to F3-4).

7.3 Control Room Personnel

7.3.1 Assist the Shift Supervisor as requested.

7.3.2 Utilize applicable Operations Manual procedures to respond to the Notification of Unusual Event emergency classification, as appropriate, with the object of returning the plant to a normal safe status (Mode 5, Cold Shutdown, if necessary).

7.3.3 Announce the location and nature of the emergency over the public address system, if applicable. Direct all non-essential personnel to remain clear of the affected area (if applicable) and to refrain from using the public address system.

7.3.4 Continuously monitor the Control Room instrumentation, radiation monitors, or any other developments which would be indicative of further system degradation. Inform the Shift Supervisor immediately of any changes in the plant status.

7.4 Emergency Director

7.4.1 The Emergency Director position is not normally activated during the Notification of Unusual Event.

7.4.2 IF the Shift Manager decides to activate the Emergency Response Organization, THEN the ED position should be initially staffed by the Shift Manager and eventually turned over to an oncoming Emergency Director designee.

7.4.3 IF the TSC is activated, THEN an Emergency Director should be designated as the person in command and control in the TSC.

7.4.4 Those TSC functions and activities necessary for the specific event response need be implemented. Facility checklists may be used as guides. Examples of TSC functions are shown below:

A. Plant Status Board Keeper

B. ERCS Operation

C. ED Log Keeper

D. Emergency Work Status Board

E. Emergency Communicators

7.5 Shift Emergency Communicator (SEC)

7.5.1 Report to the Control Room immediately upon notification.

7.5.2 Complete the "Emergency Notification Report Form," (PINGP 577), F3-5 and have it reviewed and approved by the Shift Manager.

NOTE:	**State and local authorities SHALL be notified within 15 minutes of the decisions of the emergency classification.**

7.5.3 Complete the required notification of state and local authorities, and site personnel in accordance with PINGP 579 of F3-5, "Emergency Notifications."

7.5.4 Assist as necessary the Shift Manager in the coordination of other required communication contacts (e.g., medical support, fire support, etc.). See the "Mo & PI Emergency Preparedness Telephone Directory" for local support services phone numbers.

7.5.5 Notify appropriate plant staff support personnel to augment the onsite staff or activate the ERO as deemed necessary by the Shift Manager.

7.5.6 Maintain communications throughout the emergency classification as required by F3-5, "Emergency Notifications."

NOTE:	**Be prepared to notify applicable authorities if conditions escalate to a more severe emergency class.**

7.5.7 When the Notification of Unusual Event class has been terminated, close-out the emergency classification, by notifying the state, local, and site personnel in accordance with F3-5, "Emergency Notifications."

7.6 Other Operations Personnel

7.6.1 Assistant Plant Equipment Operators and Plant Attendants should continue with assigned duties or report to the Control Room if requested.

7.6.2 Relief Shift Operators onsite, should continue with assigned operations unless their assistance is requested.

7.7 Radiation Protection Group

7.7.1 The Shift Radiation Protection Specialist **SHALL** provide assistance (e.g., sampling, chemistry, radio-chemistry, surveys, etc.) as requested by the Shift Supervisor.

7.7.2 An REC designee should report to the TSC and provide event updates to the Wisconsin Health Dept. representative using PINGP 1246, WI/MN Health Department Initial Call Back Information.

7.7.3 Other Radiation Protection Group personnel should continue with normal duties unless directed to do otherwise.

7.8 Plant Security Force

7.8.1 The designated Security Officer or Security Staff member **SHALL** perform the responsibilities of the Shift Emergency Communicator (SEC).

7.8.2 All other plant security force should continue with normal duties unless directed to do otherwise.

7.8.3 During off-normal work hours and when requested by the Shift Emergency Communicator (SEC), a designated member of the Security Force should control the telephone switchboard in the TSC.

7.9 All Other Personnel On Site

7.9.1 Continue with normal duties unless directed to do otherwise.

7.9.2 Stay clear of areas as announced over the public address system.

7.10 Business Support Group

During normal work hours and when requested by the SEC, a designated person from the plant switchboard operator group should report to the TSC to control the telephone switchboard.

F3	RESPONSIBILITIES DURING AN ALERT, SITE AREA, OR GENERAL EMERGENCY	NUMBER: F3-4 REV: 28

REFERENCE USE
• *Procedure segments may be performed from memory.*
• *Use the procedure to verify segments are complete.*
• *Mark off steps within segment before continuing.*
• *Procedure should be available at the work location.*

O.C. REVIEW DATE:	OWNER:	EFFECTIVE DATE
040102 SC	M. Werner	4-15-02

TABLE OF CONTENTS

Section	Title	Page
1.0	PURPOSE	4
2.0	APPLICABILITY	4
3.0	PRECAUTIONS	4
4.0	RESPONSIBILITIES	5
5.0	DISCUSSION	6
6.0	PREREQUISITES	12
7.0	PROCEDURE	12
7.1	Shift Supervisor of Affected Unit	12
7.2	Shift Supervisor of Unaffected Unit	13
7.3	Shift Manager	13
7.4	Operations Group	14
7.5	Shift Emergency Communicator	17
7.6	Technical Support Coordinator	18
7.7	Operational Support Coordinator	18
7.8	Assembly Point Coordinator	18
7.9	Radiological Emergency Coordinator	18
7.10	Radiation Protection Group	19
7.11	Security Group	20
7.12	Logistics Group	22
7.13	Instrument & Control Group	23
7.14	Maintenance Group	24
7.15	Engineering Group	24
7.16	Severe Accident Management Group	26
7.17	Contract, Temporary Personnel and Visitors	26

TABLE OF CONTENTS [CONTINUED]

Section	Title	Page

LIST OF FIGURES

Figure 1 PINGP 1125 27

Figure 2 PINGP 571 46

Figure 3 PINGP 1095 52

Figure 4 PINGP 572 53

Figure 5 PINGP 573 59

Figure 6 PINGP 574 64

Figure 7 PINGP 911 70

Figure 8 PINGP 1245 72

Figure 9 PINGP 1237 73

Figure 10 PINGP 1188 74

1.0 PURPOSE

The purpose of this instruction is to delineate the responsibilities of various emergency organization personnel and onsite organizations required to respond to an Alert, a Site Area Emergency, or a General Emergency.

2.0 APPLICABILITY

This instruction **SHALL** apply to all plant personnel.

3.0 PRECAUTIONS

3.1 All personnel should stay clear of any areas as announced over the public address system.

3.2 All personnel should refrain from using the public address system or telephone system during an emergency.

3.3 When the evacuation alarm is heard, evacuate your work area while listening to specific instructions on the plant's public address system. If you cannot hear or understand the instructions, continue to leave the immediate area until you learn of the evacuation instructions.

3.4 Anyone working in a contaminated area when the evacuation alarm sounds should remove as much protective clothing as time permits, especially gloves, booties or rubbers. If wearing a double suit, removal of outside clothing would only be necessary. Proceed to the designated assembly area. If unable to remove all protective clothing, inform personnel in charge at the assembly area of your condition.

NOTE:	**When the evacuation alarm sounds during a DRILL, remove ALL protective clothing prior to evacuating.**

3.5 When exiting the Protective Area via the Guardhouse, proceed through the portal monitor quickly and step through without stopping. All I.D. cards (badges) should be collected and checked out by the Security Force, so an early printout of all personnel within the Protected Area can be obtained.

3.6 Everyone should remain at assembly area for monitoring and accountability checks until released by the Emergency Director or directed for reassignment for duty within the plant. Follow instructions from the Assembly Point Coordinator. When departing the site property, obey all instructions from traffic control personnel.

3.7 All entries into the Auxiliary Building should be controlled through the OSC. Aux Building entries made for purposes of equipment operation, search and rescue, damage control, etc., should be accompanied by a Radiation Protection Specialist, or other qualified individual.

3.8 In the case of a credible security event, personnel may be asked to take cover for immediate personal protection or TSC and OSC staff may be directed to report to alternate locations different from the TSC and OSC (e.g., Plant Manager's Conference Room or EOF). See F3-31 for more security event guidance.

4.0 RESPONSIBILITIES

4.1 Overall Onsite Responsibility - Emergency Director

4.2 In Charge, Control Room - Shift Manager

Technical Support Center - TSC Coordinator

Operational Support Center - OSC Coordinator

Assembly Point - Assembly Point Coordinator

4.3 Assistance, Control Room - Shift Supervisors
- Control Room Operators

TSC
- Operations Committee
- Shift Emergency Communicator
- Radiological Emergency Coordinator
- Engineering support as needed (i.e., systems experts)

OSC
- Extra Operators
- Rad Survey Teams
- Maintenance Supervisors
- I&C Supv & Coordinators
- Chief Station Electrician and Alternates
- Additional Support as needed

5.0 DISCUSSION

A graded scale of response is provided for the different classes of emergencies, each requiring a specific response by emergency organization personnel for the protection of the public health and safety.

5.1 Alert

5.1.1 Definition

The Alert Conditions are events which are in progress or have occurred which involve actual or potential substantial degradation of the level of safety of the plant.

Some releases of radioactive material to offsite areas are probable. Hence, there is some necessity for emergency planning and response by offsite agencies. Any radioactive release will be limited to a small fraction of the EPA Protective Action Guideline exposure levels.

5.1.2 Purpose of Alert Class

The purpose of the Alert Emergency classification is to (1) assure that emergency personnel are readily available to respond if the situation becomes more serious or to perform confirmatory radiation monitoring, if required; (2) provide offsite authorities current status information.

5.1.3 Plant Actions and Responsibilities

A. Promptly inform State and/or local authorities of Alert status and reason for Alert as soon as discovered.

B. Augment resources by activating onsite Technical Support Center, onsite Operational Support Center and Near-Site Emergency Operations Facility (EOF).

C. Assess and respond to the Alert condition.

D. Dispatch onsite or offsite survey teams and associated communications (if needed).

E. Provide periodic plant status updates to offsite authorities.

F. Provide periodic meteorological assessments to offsite authorities, and if any releases are occurring, dose estimates for actual releases.

G. Close out by verbal summary to offsite authorities and assess need for recovery.

or

H. Escalate to a more severe class.

5.1.4 State and/or Local Offsite Authority Actions

A. Provide fire or security assistance, if required.

B. Augment resources by activating Emergency Operating Centers and Emergency Alert System to standby status.

C. Alert to standby status key emergency personnel including monitoring teams and associated communications.

D. Provide confirmatory offsite radiation monitoring and ingestion pathway dose projections if actual releases substantially exceed technical specification limits.

E. Maintain alert status until verbal close-out.

or

F. Escalate to a more severe class.

5.2 Site Area Emergency

5.2.1 Definition

The Site Area Emergency describes events which are in progress or have occurred which involve actual or likely major failures of plant functions needed for protection of the public.

Significant offsite releases are likely to occur or are occurring, but where a core melt situation is not expected although severe fuel damage may have occurred.

Any radioactive releases are not expected to exceed the EPA Protective Action Guideline exposure levels except near the site boundary.

5.2.2 Purpose of Site Area Emergency Class

The purpose of the Site Area Emergency classification is to:

A. Assure that response centers are manned.

B. Assure that monitoring teams are dispatched (if needed).

C. Assure that personnel required for evacuation of Near-Site areas are at duty stations if the situation becomes more serious.

D. Provide current information for and consultation with offsite authorities.

E. Provide updates for the public through offsite authorities.

5.2.3 Plant Actions and Responsibilities

A. Promptly inform State and/or local offsite authorities of Site Area Emergency status and reason for emergency as soon as discovered.

B. Augment resources by activating onsite Technical Support Center, onsite Operational Support Center and the Near-Site Emergency Operations Facility (EOF).

C. Assess and respond to the Site Area Emergency.

D. If radiological or environmental conditions permit, evacuate onsite, nonessential personnel.

E. Dispatch onsite and offsite survey teams and associated communications (if needed).

F. Provide a dedicated individual for plant status updates to offsite authorities.

G. Make senior technical and management staff onsite available for consultation with NRC and State on a periodic basis.

H. Provide meteorological and dose estimates to offsite authorities for actual releases via a dedicated individual.

I. Provide release and dose projections based on available plant condition information and foreseeable contingencies.

J. Close out or terminate emergency class by contacting offsite authorities and assess need for recovery.

or

K. Escalate to General Emergency class.

5.2.4 State and/or Local Offsite Authority Actions

A. Provide any assistance requested.

B. If protective actions are desirable, activate the Public Alert & Notification System.

C. Provide public within at least 10 miles, periodic updates on emergency status.

D. Augment resources by activating Emergency Operating Centers.

E. Dispatch key emergency personnel including monitoring teams and associated communications.

F. Alert to standby status other emergency personnel (e.g., those needed for evacuation) and dispatch personnel to Near-Site duty stations.

G. Provide offsite monitoring results to licensee and others and jointly assess them.

H. Continuously assess information from licensee and offsite monitoring with regard to changes to protective actions already initiated for public and mobilizing evacuation resources.

I. Recommend placing milk animals within 2 miles on stored feed and assess need to extend distance.

J. Provide press briefings, perhaps with licensee.

K. Maintain Site Area Emergency status until close-out.

or

L. Escalate to General Emergency class.

5.3 General Emergency

5.3.1 Definition

The General Emergency describes events in progress or which have occurred which involve actual or imminent substantial core degradation or melting with the potential for loss of containment .

Radioactive releases can be reasonably expected to exceed the EPA Protective Action Guideline exposure levels offsite for more than the immediate site area. Hence, protective actions may have to be taken for protection of the general public.

5.3.2 Purpose of General Emergency Class

The purpose of the General Emergency classification is to:

A. Initiate predetermined protective actions for the public.

B. Provide continuous assessment of information from licensee and offsite measurements.

C. Initiate additional measures as indicated by actual or potential releases.

D. Provide current information for the public and consultation with offsite authorities.

E. Provide updates for the public through offsite authorities.

5.3.3 Plant Actions and Responsibilities

A. Promptly inform state and local offsite authorities of General Emergency status and reason for emergency as soon as discovered.

B. Augment resources by activating onsite Technical Support Center, onsite Operational Support Center and Near-Site Emergency Operations Facility (EOF).

C. Assess and respond to General Emergency.

D. If radiological or environmental conditions permit, evacuate onsite, nonessential personnel.

E. Dispatch onsite and offsite survey teams and associated communications.

F. Provide a dedicated individual for plant status updates to offsite authorities.

G. Make senior technical and management staff onsite available for consultation with NRC and State on a periodic basis.

H. Provide meteorological and dose estimates to offsite authorities for actual releases via a dedicated individual.

I. Provide release and dose projections based on available plant condition information and foreseeable contingencies.

J. Implement the Severe Accident Management process as necessary.

K. Close out or terminate emergency class by briefing offsite authorities and transition to recovery.

5.3.4 State and/or Local Offsite Authority Actions

A. Provide any assistance requested.

B. Activate immediate public notification of emergency status and provide public periodic updates.

C. Recommend evacuation for 2 mile radius and 5 miles downwind and assess need to extend distances.

D. Augment resources by activating Near-Site EOC and any other primary response centers.

E. Dispatch key emergency personnel including monitoring teams and associated communications.

F. Dispatch other emergency personnel to duty stations within 5 mile radius and alert all others to standby status.

G. Provide offsite monitoring results to licensee and others and jointly assess these.

H. Continuously assess information from licensee and offsite monitoring with regard to changes to protective actions already initiated for public and mobilizing evacuation resources.

I. Recommend placing milk animals within 10 miles on stored feed and assess need to extend distance.

J. Provide press briefings, perhaps with licensee.

K. Maintain General Emergency status until close-out or termination of emergency class.

6.0 PREREQUISITES

An Alert, Site Area, or General Emergency has been or will be declared.

7.0 PROCEDURE

7.1 Shift Supervisor of Affected Unit

7.1.1 Proceed to the Control Room (if not already there).

NOTE:	**The Shift Supervisor of the affected unit SHALL remain in the Control Room at all times during accident conditions until properly relieved.**

7.1.2 Implement the appropriate Emergency Operating Procedures (EOPs) and Severe Accident Management Guidelines (SAMGs), as needed, and respond to the emergency condition with the objective of returning the plant to a normal safe condition (Mode 5, Cold Shutdown, if necessary).

NOTE:	**The Shift Manager and SEC will be summoned to the Control Room per the EOPs.**

7.1.3 Direct activities of the Control Room Operators.

7.1.4 Coordinate, with the Emergency Director, all plant operations which may impact on radioactive releases.

7.2 Shift Supervisor of Unaffected Unit

7.2.1 Proceed to the Control Room (if not already there).

7.2.2 Direct operations on the unaffected unit.

7.2.3 Assist the Shift Manager, as necessary.

7.3 Shift Manager

NOTE:	**In the case of a credible security event, if you are unable to safely go to the Control Room, consider directing the emergency response from another safe location (e.g., SM Office, CAS or Plant Manager's Conference Room). An informational copy of the SM/SS Emergency Director Checklist (PINGP 1125) is located in the back of F3-4, located in the SM Office, Plant Manager's Conference Room, EOF and New Admin Reference Library.**

NOTE:	**The initial E-Plan response to the event should be made by the Shift Manager. However, in order to adequately maintain oversight of the operational aspects of the event, it may be necessary for the Shift Manager to delegate specific E-Plan duties to the unaffected unit SS during the initial response while still maintaining the ED position.**

7.3.1 Report to the Control Room immediately upon notification.

7.3.2 Assess the emergency condition, event evaluation, and safety aspects of the plant.

NOTE:	**It is recommended that the Shift Manager stands at the Reactor Operator's desk to hear key communications, use an ERCS terminal for monitoring CSFSTs (Critical Safety Function Status Trees), and solicit or answer questions of the SS.**

7.3.3 Temporarily assume the position of Emergency Director until relieved by the oncoming Designated Emergency Director using PINGP 1125 (Figure 1), Shift Manager/Shift Supervisor Emergency Director Checklist, for specific guidance on emergency plan duties.

7.3.4 If the Severe Accident Management process is initiated and the TSC is functioning, the Shift Manager should report to the TSC and become a member of the Severe Accident Management Team.

7.4 Designated Emergency Director (Plant Manager or ED Designee)

NOTE:	**In the case of a credible security event, if you are unable to safely go to the Control Room or TSC, consider directing the emergency response from another safe location (e.g., Plant Manager's Conference Room or EOF). An information copy of the Emergency Director Checklist (PINGP 571) is located in the back of F3-4, located in the Plant Manager's Conference Room, EOF and New Admin Reference Library. See F3-31 for more security event guidance.**

7.4.1 The Emergency Director (Plant Manager or designee) should report to Control Room and assume the role of Emergency Director from the Shift Manager/Shift Supervisor.

7.4.2 Use PINGP 571 (Figure 2), TSC Emergency Director Checklist.

7.5 Operations Group

7.5.1 General Superintendent Plant Operations or Designee

A. Report to the Technical Support Center to perform the role of the Operations Group Leader.

B. Assist in the activation of onsite emergency centers and organization by ensuring adequate Operations staffing in Control Room and OSC.

C. Ensure the OSC Operations Advisor is staffed by an Operations Support Pool personnel.

D. Assess the operational aspects of the emergency.

E. Periodically review the status and implementation of the EOPs and/or Abnormal Operations procedures with the TSC Staff.

F. If the Severe Accident Management process is initiated, staff the Severe Accident Evaluation Team Leader position.

7.5.2 Control Room Personnel

A. Assist the Shift Supervisor as requested.

B. Utilize applicable Operations Manual procedures to respond to the Emergency Condition as appropriate, with the objective of returning the plant to a normal safe status (Mode 5, Cold Shutdown, if necessary).

C. Announce the location and nature of the Emergency over the public address system. See PINGP 1125 (Figure 1) for example of announcement.

D. When an evacuation is declared, sound the evacuation alarm and direct all nonessential personnel to evacuate to the designated assembly point. Direct all personnel to remain clear of the affected area (if applicable). See F3-9, Emergency Evacuation or PINGP 1125 (Figure 1) for example of announcement.

E. Continuously monitor the Control Room instrumentation, radiation monitors, or any other developments which could be indicative of further system degradation. Inform the Shift Supervisor immediately of any changes in plant status.

F. Implement Severe Accident Management strategies as directed by the TSC.

7.5.3 Auxiliary Building and BOP Operators

A. Aux and BOP Operators should report to their duty station when the emergency is declared.

B. Aux and BOP Operators will continue to take direction from the Control Room during the emergency.

C. Aux Operators **SHALL** ensure that they have appropriate dosimetry and a dose rate indicating device for all further required operations in the Auxiliary Building.

D. Aux & BOP Operators should give consideration to terminating all nonessential plant operations (e.g., shutdown resin sluicing).

E. When a Plant Evacuation is declared, the Aux & BOP Operators should periodically call the OSC (for exposure control purposes) and inform the OSC of outplant operational activities.

F. If the Auxiliary Building general rad levels exceed 100 mR/hr or upon recommendations from the Emergency Director or Radiation Protection Group, the Aux Operators **SHALL** evacuate to the OSC. For exposure control purposes, all further Auxiliary Building entries **SHALL** be controlled through the OSC.

G. Perform the necessary onsite and in-plant radiation surveys as requested by the Shift Supervisor.

7.5.4 Relief Shift, Training Operators, and Operations Support Pool

A. Relief Shift and Training Operators should proceed to the Operational Support Center for further instructions to support Operations.

B. An available Shift Supervisor should staff the OSC Coordinator position.

C. Operations Support Pool should provide assistance to the OSC Coordinator in an advisory capacity by staffing the OSC Operations Advisor position. PINGP 1095 (Figure 3), OSC Operations Advisor Checklist, should be used as a guide.

D. Operations Support Pool should assist the OSC in tracking work groups, outplant operational activities, and updating the emergency work status board.

7.6 Shift Emergency Communicator

7.6.1 Report to the Control Room immediately upon notification unless directed otherwise by Shift Manager/Emergency Director.

7.6.2 Complete the Notification Report Form (PINGP 577), and have it reviewed and approved by the Emergency Director.

NOTE:	**State and local authorities SHALL be notified within 15 minutes of the declaration of the emergency classification.**

7.6.3 Complete the required notification of state and local authorities, and site personnel in accordance with F3-5, Emergency Notifications.

7.6.4 Notify applicable offsite authorities if conditions escalate to a more severe emergency class in accordance with F3-5, Emergency Notifications.

NOTE:	**If the EOF has been activated, notifications of offsite agencies for an escalation or termination will be completed by EOF personnel.**

7.6.5 When the emergency classification has been terminated, close-out the emergency classification, by notifying the state, local, and site personnel in accordance with F3-5, Emergency Notification.

7.7 Technical Support Coordinator

7.7.1 The Technical Support Center Coordinator **SHALL** be responsible for the general activation, operation and coordination of activities in the Technical Support Center (TSC).

7.7.2 The TSC Coordinator should report to the TSC and assume the role as TSC Coordinator. Use PINGP 573 (Figure 5), Technical Support Center Coordinator Checklist.

7.8 Operational Support Coordinator

7.8.1 The Operational Support Center Coordinator **SHALL** be responsible for the general activation, operation, and coordination of activities in the Operational Support Center (OSC).

7.8.2 The OSC Coordinator should report to the OSC and assume the role as OSC Coordinator. Use PINGP 574 (Figure 6), Operational Support Center Coordinator Checklist.

7.9 Assembly Point Coordinator

7.9.1 The Assembly Point Coordinator **SHALL** be responsible for the general operation of the assembly area.

7.9.2 The Assembly Point Coordinator should report to the Assembly Point and assume the role of Assembly Point Coordinator. Use PINGP 911 (Figure 7), Assembly Point Coordinator Checklist and F3-9, Emergency Evacuation.

7.10 Radiological Emergency Coordinator

7.10.1 The Radiological Emergency Coordinator (REC) **SHALL** be responsible for accident assessment, onsite and offsite.

7.10.2 The REC should report to the Technical Support Center and assume responsibility for the Radiological Emergency Coordinator position. Use Radiological Emergency Coordinator Checklist, PINGP 572 (Figure 4).

7.11 Radiation Protection Group

7.11.1 The Shift Radiation Protection Specialist **SHALL** provide assistance (e.g., sampling, chemistry, radio-chemistry, surveys, or dose assessment) as requested by the Emergency Director.

7.11.2 The Radiation Survey Teams should be dispatched to initiate offsite surveys as directed per F3-15 and/or F3-16.

7.11.3 All other radiation survey group members should report to the plant site for further instructions. The radiation survey group members reporting to the plant site should:

A. Proceed to the Operational Support Center and wait for further instructions, unless otherwise directed by the Emergency Director or Radiological Emergency Coordinator.

B. Supervise any checks for personnel contamination and direct decontamination at the assembly point.

C. Provide radiation protection coverage for:

1. Damage control and repair teams
2. First aid
3. Search and Rescue Teams
4. Reentry Teams

D. Perform emergency sampling (air and liquid), chemistry, radio-chemistry, surveys, etc., as directed by the Emergency Director or the Radiological Emergency Coordinator.

7.11.4 One individual should assume OSC Radiation Protection Coordinator. Use PINGP 1245 (Figure 8), OSC Radiation Protection Coordinator Checklist.

7.12 Security Group

7.12.1 The Superintendent Security, or designee, should report to the Technical Support Center (TSC). The Superintendent Security should:

A. Ensure FFD breath analysis testing is set up and performed as required for off-hours emergency call-in.

B. Consider suspending selected plant access controls to expedite the staffing of the emergency centers during an emergency. See SIP 5.2, Security Response to Site Emergencies.

C. Assume responsibility for personnel accountability following a plant evacuation and continuing accountability throughout the duration of the emergency. See Procedure F3-10.

D. Coordinate security control throughout the duration of the emergency situation. See Procedure F3-29.

E. Evaluate aspects concerning attempted acts of sabotage.

7.12.2 The Security Force

A. The Security First or Second Lieutenant or designee **SHALL** perform the responsibilities of the Shift Emergency Communicator (SEC).

B. All other plant security force should continue with normal duties unless otherwise notified.

C. During off-normal work hours and when requested by the Shift Emergency Communicator (SEC), a designated Security Force Member will control the telephone switchboard in the TSC. See Procedure and F3-5.1.

D. When the evacuation alarm sounds, all Security Officers, with the exception of Roving Patrol and the SAS Operator, evacuate to the Guardhouse for further instructions.

NOTE:	**The SAS Operator should evacuate when directed by the Emergency Director.**

E. Assist with the evacuation of personnel to the designated assembly point in accordance with F3-29, "Emergency Security Procedures" and F3-9, Emergency Evacuation.

NOTE:	**1. It should be necessary for personnel to exit quickly thru the portal monitor and turnstile. Collect all I.D.'s and process badges so an Employee Onsite List of personnel inside Protected Area can be obtained.** **2. To speed evacuation from the Protected Area, it may be beneficial to open the vehicle gates and allow personnel to exit there.** **3. The Security Force SHALL ensure that all personnel onsite, within the Protected Area, have heard the evacuation alarm.**

F. Perform a check of all areas immediately surrounding the Protected Area so that all personnel are notified of the evacuation in progress.

NOTE:	**The owner Controlled Area will be checked when directed by the Emergency Director.**

G. Control access to Protected Area per instructions from the Emergency Director.

H. Be prepared to obtain a printout for an accountability check in accordance with F3-10, Personnel Accountability.

I. Assist the Radiation Protection Group in establishing a secondary access control point when directed by the Emergency Director.

J. Station a Security Force Member, with dosimetry, at the plant entrance, if conditions permit, to control access to the plant site.

7.13 Logistics Group

The Logistics Support Group includes the Business Support Group (Administrative Services and Document Control), the Plant Services Group and Materials Management (Warehouse).

7.13.1 The Logistics Group Leader designee should report to the TSC and utilize PINGP 1188 (Figure 10), TSC Logistics Checklist.

7.13.2 The Business Support Group, and Materials Management Group should:

A. Continue with normal duties unless directed otherwise.

NOTE:	**1. During off hours emergency activation, designated Warehouse personnel should report to the Operations Support Center (OSC) to provide support in retrieving emergency parts.** **2. During normal hours emergency activation, designated Warehouse personnel should continue with normal duties until a Plant Evacuation occurs, at which time they should report to the OSC.**

B. Immediately vacate any emergency operating center (Control Room, OSC, or TSC) when an emergency is declared.

C. Remain clear of any areas, as announced over the public address system.

D. When requested by the Shift Emergency Communicator (SEC), the office staff should transfer control of the telephone switchboard to the TSC.

NOTE:	**The switchboard operator should report to the TSC to control the switchboard from the TSC until relieved by an alternate communicator. See F3-5.1.**

E. When the evacuation alarm sounds, proceed to the designated assembly point.

F. Follow instructions from the Assembly Point Coordinator for either reentry into the plant or departure from the site property.

7.13.3 The Nuclear Plant Service Attendants should:

A. Report to the Operational Support Center to receive specific instructions from the OSC Coordinator.

B. Provide Offsite Survey Team Drivers and/or Sample Couriers for Offsite Radiation Survey Teams.

C. Provide assistance for monitoring and decontamination at the assembly point as requested.

D. Provide general support of emergency response and recovery actions, as requested.

7.14 Instrument & Control Group

7.14.1 The I&C Supervisor and Coordinators should report to the Operational Support Center (OSC) to provide support for:

A. Repair and corrective actions for instrument and control systems, and;

B. Search and rescue efforts.

7.14.2 The I&C Specialists should:

A. Continue with normal duties unless directed otherwise.

B. Immediately vacate any emergency operating center (Control Room, OSC or TSC) when an emergency is declared unless directed otherwise.

C. Remain clear of any areas, as announced over the public address system.

D. When the evacuation alarm sounds, proceed to the designated assembly point unless directed to staff the OSC.

E. Follow instructions from the Assembly Point Coordinator for either reentry into the plant or departure from the site property.

7.15 Maintenance Group

The Maintenance Group consists of all Maintenance personnel and plant Electricians.

7.15.1 The Maintenance Supervisors (Mechanical and Electrical), and designated Lead Electricians, Lead Machinists, and Lead Riggers should report to the OSC to provide support for:

A. Repair and corrective actions for mechanical and electrical systems, and;

B. Search and rescue efforts.

7.15.2 All other Maintenance personnel and Electricians should:

A. Continue with normal duties unless directed otherwise.

B. Immediately vacate any emergency operating center (Control Room, OSC, or TSC) when an emergency is declared unless directed otherwise.

C. Remain clear of any areas, as announced over the public address system.

D. When the evacuation alarm sounds, proceed to the designated assembly point unless directed to staff the OSC.

E. Follow instructions from the Assembly Point Coordinator for either reentry into the plant or departure from the site property.

7.16 Engineering Group

7.16.1 All Superintendents, lead Engineers, and system experts (as requested by their supervisor) should report to the Technical Support Center (TSC). The Engineering Group should:

A. Provide technical & engineering support for plant systems.

B. Provide technical & engineering support for operating radioactive waste systems.

C. Provide technical & engineering support on core parameter analysis.

D. Provide plant parameter trending and analysis utilizing the Emergency Response Computer System (ERCS).

E. Identify adverse trends and attempt to predict significant events that could adversely affect the plant or accident mitigation efforts.

F. Perform critical evaluations of "cause and effects" on failing equipment.

G. Update TSC staff of systems' status and key equipment problems or availability.

H. Provide technical support for emergency repairs and corrective action on electrical and mechanical systems.

I. Evaluate alternate systems, components or methods that may be used to restore needed capabilities or accomplish accident mitigation.

J. Develop and propose alternate electrical or fluid flow paths that would restore key functions that were lost.

K. If the Severe Accident Management process is initiated, monitor the Severe Challenge Status Trees (SCSTs) with the aid of the ERCS.

7.16.2 All other engineers (unless specifically requested to remain in the TSC) should:

A. Continue with normal duties unless directed otherwise.

B. Immediately vacate any emergency operating center (Control Room, OSC, or TSC) when an emergency is declared unless directed otherwise.

C. Remain clear of any areas, as announced over the public address system.

D. When the evacuation alarm sounds, proceed to the designated assembly point unless directed to staff the TSC.

E. Follow instructions from the Assembly Point Coordinator for either reentry into the plant or departure from the site property.

7.17 Severe Accident Management Group

The Decision Maker and Evaluation Team of the Severe Accident Management (SAM) Group should report to the TSC.

7.17.1 The SAM Group Decision Maker **SHALL**:

A. Consult with the SAM Evaluation Team.

B. Authorize implementation of appropriate Severe Accident Management strategies as they are developed and evaluated.

7.17.2 The SAM Evaluation Team **SHALL**:

A. Evaluate the Diagnostics Flow Charts and Severe Challenge Status Trees.

B. Implement the use of the Severe Accident Guidelines and Severe Challenge Guidelines.

C. Recommend for authorization the implementation of Severe Accident Strategies to the SAM Group Decision Maker (Emergency Director).

D. See PINGP 1237 (Figure 9), SAM Evaluation Team Leader Checklist, for guidance.

7.17.3 The SAM Implementors who are site emergency response individuals **SHALL** implement the strategies as directed by the SAM Decision Maker.

7.18 Contract, Temporary Personnel and Visitors

7.18.1 Continue with normal duties unless directed otherwise.

7.18.2 Immediately vacate any emergency operating center (Control Room, OSC, or TSC) when an emergency is declared.

7.18.3 Remain clear of any areas, as announced over the public address system.

7.18.4 When the evacuation alarm sounds, proceed to the designated assembly point.

7.18.5 Follow instructions from the Assembly Point Coordinator for either reentry into the plant or departure from the site property.

EXAMPLE ONLY
USE CURRENT REVISION

Figure 1 PINGP 1125

PINGP 1125, Rev. 15
Page 1 of 19
Document Type: 7.42L
Retention: Life of Plant

CONTROL ROOM SHIFT MANAGER/SHIFT SUPERVISOR EMERGENCY DIRECTOR CHECKLIST

NOTE:	**The initial E-Plan response to the event should be made by the Shift Manager. However, in order to adequately maintain oversight of the operational aspects of the event, it may be necessary for the Shift Manager to delegate some E-Plan duties to the unaffected unit SS during the initial response while still maintaining the ED position. The ED duties may be turned over to an oncoming ED designee, if necessary.**

NOTE:	**In the case of a credible security threat, implementation of Emergency Plan procedures may need to be modified, depending on the event, in order to protect the safety of plant personnel, vital equipment, or protect the health and safety of the public. Consult with Supt. of Security/designee concerning security hazards within the plant.**

NOTE:	**A cellular telephone exists in the TSC Emergency Locker. Use if necessary. It will work at TSC window and outdoors.**

For a (an): _____ **NUE**, go to Section I, page 2.

_____ **ALERT**, go to Section II, page 6.

_____ **SITE AREA EMERGENCY**, go to Section III, page 11.

_____ **GENERAL EMERGENCY**, go to Section IV, page 15.

EXAMPLE ONLY
USE CURRENT REVISION

Figure 1 PINGP 1125

PINGP 1125, Rev. 15
Page 2 of 19

NUE NUE NUE NUE NUE NUE NUE NUE NUE NUE NUE NUE NUE

I. NOTIFICATION OF UNUSUAL EVENT (NUE) ACTIONS (F3-3)

Time NUE Declared _____

INITIAL TIME

NOTE	In order to adequately maintain oversight of the operational aspects of the event, it may be necessary to delegate some E-Plan duties to the unaffected unit SS.

_____ _____ (1) IF security threat, THEN **go** to F3-31 and **complete** actions for security related threats.

_____ _____ (2) A Local Evacuation of a specific area of the plant **may** be necessary because of local hazards. A Local Evacuation **may** proceed as follows:

a. **DETERMINE** assembly points using the table below as general guidance.

LOCAL EVACUATION FROM THESE AREAS	ASSEMBLY AREA FOR ACCOUNTABILITY
Containment/Spent Fuel Pool	735' Basketball Court
Aux Bldg	Access Control HP Office
Old Admin/Turb Bldg (non-outage)	New Admin Lunchroom
New Admin Turb Bldg (outage) NPD/SBO/Office Trailers Contractor Fab Shop	Receiving Warehouse or North Warehouse
Warehouse #1/Const Fab Shop Contractor Trailers	Guardhouse

b. **SOUND** the EVACUATION ALARM.

c. **ANNOUNCE** the following over the plant page.

"ATTENTION ALL PLANT PERSONNEL. THERE IS A (hazard) OCCURRING IN (specify area). ALL PERSONNEL SHOULD EVACUATE FROM THE (specify area) AND GO TO (assembly area) FOR ACCOUNTABILITY. STAY CLEAR OF (specify area) UNTIL FURTHER NOTIFIED."

d. **REPEAT** the announcement.

e. **DIRECT** security (4318) to conduct Personnel Accountability using F3-10 as guidance.

NUE NUE NUE NUE NUE NUE NUE NUE NUE NUE NUE NUE NUE

EXAMPLE ONLY
USE CURRENT REVISION

Figure 1 PINGP 1125

NUE NUE NUE NUE NUE NUE NUE NUE NUE NUE NUE NUE NUE

I. NUE ACTIONS (CONTINUED)

INITIAL TIME

NOTE:	In the case of a credible security event, if the TSC or Turbine Floor are unsafe areas, it may be safer for the SEC to perform emergency notifications from another safe location (e.g., Control Room SAS or CAS). SEC notification forms (PINGP 577, 579 & 580) are available in Control Room, SAS, TSC, CAS, and New Admin Reference Library.

_____ _____ (3) **Ensure** the SEC (pager 4427) has been summoned to the Control Room and starts the completion of the notification report form (PINGP 577).

NOTE:	State and local authorities SHALL be notified within 15 minutes of the declaration of the emergency class.

NOTE:	It is recommended that you position yourself at the Reactor Operator's desk to hear key communications, use an ERCS terminal for monitoring CSFSTs, and solicit or answer questions of the SS.

_____ _____ (4) **Review** and **approve** the notification report form PINGP 577.

NOTE:	In the case where the SEC or Duty Chemist is NOT available, STEP (5) provides, faxing PINGP 577 to Offsite Agencies and has SAS complete the notification.

_____ _____ (5) IF SEC is NOT available, THEN:

- **Place** PINGP 577 facedown on the fax.
- **Dial** 5076 (or backup 4805).
- **Press** "START" button.
- **Call** SAS (ext. 4323) and **direct** them to complete 15 minute notification using PINGP 579.
- **Go to** STEP (7).

_____ _____ (6) **Direct** the SEC to complete the notifications of state, local and site personnel in accordance with F3-5 and PINGP 579.

NUE NUE NUE NUE NUE NUE NUE NUE NUE NUE NUE NUE NUE

EXAMPLE ONLY
USE CURRENT REVISION

Figure 1 PINGP 1125

NUE NUE NUE NUE NUE NUE NUE NUE NUE NUE NUE NUE NUE

I. NUE ACTIONS (CONTINUED)

INITIAL TIME

_____ _____ (7) **Announce** NUE over PA System:

NOTE:	**During drills, the announcement should begin and end with "THIS IS A DRILL".**

"ATTENTION ALL PLANT PERSONNEL:

A NOTIFICATION OF UNUSUAL EVENT HAS BEEN DECLARED BASED ON

_____."
(Give brief description of event)

Repeat the announcement.

_____ _____ (8) IF staff augmentation is desired because the event is technically challenging or complex, THEN the following items should be completed:

a. **Augment** staff by directing the SEC to activate ERO pagers (for key responders) and activate the ERO automated telephone callout system (for all ERO) per the Emergency Response Organization Activation for Non-Security Events PINGP 1384.

b. **Augment** staff by conducting the following plant page over the PA System:

NOTE:	**During drills, the announcement should begin and end with "THIS IS A DRILL."**

"ATTENTION ALL PLANT PERSONNEL:

ALL MEMBERS OF THE EMERGENCY RESPONSE ORGANIZATION REPORT TO YOUR EMERGENCY DUTY STATIONS OR EMERGENCY CENTER. ALL OTHER PERSONNEL STANDBY FOR FURTHER INSTRUCTIONS."

Repeat the announcement.

c. **Complete** a turnover to the designated TSC Emergency Director (ED) WHEN the oncoming ED is ready to assume the ED responsibilities.

NOTE:	**Per regulations, notification of the NRC is required to be conducted at least immediately after the 15 minute state and local notifications and not later than 1 hour after emergency declaration. This notification should NOT be done by the SEC.**

_____ _____ (9) **Ensure** the NRC is notified of the NUE. PINGP 666 **SHALL** be complete (to the extent possible) prior to notifying the NRC via the ENS red phone.

NUE NUE NUE NUE NUE NUE NUE NUE NUE NUE NUE NUE NUE

EXAMPLE ONLY
USE CURRENT REVISION

Figure 1 PINGP 1125

NUE NUE NUE NUE NUE NUE NUE NUE NUE NUE NUE NUE NUE

I. NUE ACTIONS (CONTINUED)

INITIAL TIME

_____ _____ (10) **Direct** the SEC to request offsite support (i.e., fire dept., police, etc.), if necessary, and report when the request is completed.

_____ _____ (11) IF the emergency condition escalates, THEN **proceed** to the next appropriate emergency class checklist.

(12) IF NUE is terminated, THEN:

Time NUE Terminated _____

_____ _____ a. **Ensure** an appropriate PA announcement is made.

_____ _____ b. **Direct** SEC to complete PINGP 577 for NUE termination and conduct appropriate notifications to state/local agency.

_____ _____ c. **Ensure** the NRC is notified of the NUE termination.

_____ _____ d. **Review** 5AWI 1.13.0, Plant Event Investigation and Recovery, and **implement** as appropriate.

_____ _____ e. **Sign** and **date** this PINGP form on last page.

NUE NUE NUE NUE NUE NUE NUE NUE NUE NUE NUE NUE NUE

EXAMPLE ONLY USE CURRENT REVISION

Figure 1 PINGP 1125

ALERT ALERT ALERT ALERT ALERT ALERT ALERT ALERT ALERT ALERT

II. **ALERT ACTIONS (F3-4)**

Time ALERT Declared _____

INITIAL TIME

NOTE:	**In order to adequately maintain oversight of the operational aspects of the event, it may be necessary to delegate some E-Plan duties to the unaffected unit SS.**

_____ _____ (1) IF security threat, THEN **go** to F3-31 and **complete** actions for security related threats.

_____ _____ (2) A Local Evacuation of a specific area of the plant **may** be necessary because of local hazards. A Local Evacuation **may** proceed as follows:

a. **DETERMINE** assembly points using the table below as general guidance.

LOCAL EVACUATION FROM THESE AREAS	ASSEMBLY AREA FOR ACCOUNTABILITY
Containment/Spent Fuel Pool	735' Basketball Court
Aux Bldg	Access Control HP Office
Old Admin/Turb Bldg (non-outage)	New Admin Lunchroom
New Admin Turb Bldg (outage) NPD/SBO/Office Trailers Contractor Fab Shop	Receiving Warehouse or North Warehouse
Warehouse #1/Const Fab Shop Contractor Trailers	Guardhouse

b. **SOUND** the EVACUATION ALARM.

c. **ANNOUNCE** the following over the plant page.

"ATTENTION ALL PLANT PERSONNEL. THERE IS A (hazard) OCCURRING IN (specify area). ALL PERSONNEL SHOULD EVACUATE FROM THE (specify area) AND GO TO (assembly area) FOR ACCOUNTABILITY. STAY CLEAR OF (specify area) UNTIL FURTHER NOTIFIED."

d. **REPEAT** the announcement.

e. **DIRECT** security (4318) to conduct Personnel Accountability using F3-10 as guidance.

ALERT ALERT ALERT ALERT ALERT ALERT ALERT ALERT ALERT ALERT

EXAMPLE ONLY
USE CURRENT REVISION

Figure 1 PINGP 1125

PINGP 1125, Rev. 15
Page 7 of 19

ALERT ALERT ALERT ALERT ALERT ALERT ALERT ALERT ALERT ALERT

II. ALERT ACTIONS (CONTINUED)

INITIAL TIME

_____ _____ (3) **Assume** the role of Emergency Director (F3-4).

NOTE:	**In the case of credible security event, if the TSC or Turbine Floor are unsafe areas, it may be safer for the SEC to perform emergency notifications from another safe location (e.g., Control Room SAS or CAS). SEC notification forms (PINGP 577, 579 & 580) are available in Control Room SAS, TSC, CAS, and New Admin Reference Library.**

_____ _____ (4) **Ensure** the SEC (pager 4427) has been summoned to the Control Room and starts the completion of the notification report form (PINGP 577).

NOTE:	**State and local authorities SHALL be notified within 15 minutes of the declaration of the ALERT.**

NOTE:	**It is recommended that you position yourself at the Reactor Operator's desk to hear key communications, use an ERCS terminal for monitoring CSFSTs, and solicit or answer questions of the SS.**

_____ _____ (5) **Review** and **approve** the notification report form PINGP 577.

NOTE:	**In the case where the SEC or Duty Chemist is NOT available, STEP (6) provides, faxing PINGP 577 to Offsite Agencies and has SAS complete the notification.**

_____ _____ (6) IF SEC is NOT available, THEN:

- **Place** PINGP 577 facedown on the fax.
- **Dial** 5076 (or backup 4805).
- **Press** "START" button.
- **Call** SAS (ext. 4323) and **direct** them to complete 15 minute notification using PINGP 580.
- **Go to** STEP (8).

_____ _____ (7) **Direct** the SEC to complete the notifications of state and local agencies and activate the site Emergency Response Organization in accordance with F3-5 and PINGP 580.

ALERT ALERT ALERT ALERT ALERT ALERT ALERT ALERT ALERT ALERT

EXAMPLE ONLY
USE CURRENT REVISION

Figure 1 PINGP 1125

PINGP 1125, Rev. 15
Page 8 of 19

ALERT ALERT ALERT ALERT ALERT ALERT ALERT ALERT ALERT ALERT

II. ALERT ACTIONS (CONTINUED)

INITIAL TIME

_____ _____ (8) **Announce** the emergency class over PA System:

NOTE:	During drills, the announcement should begin and end with "THIS IS A DRILL".

"ATTENTION ALL PLANT PERSONNEL:

AN ALERT HAS BEEN DECLARED BASED ON

_____."
(Give brief description of event)

ALL MEMBERS OF THE EMERGENCY RESPONSE ORGANIZATION REPORT TO YOUR EMERGENCY DUTY STATIONS OR EMERGENCY CENTER. ALL OTHER PERSONNEL STANDBY FOR FURTHER INSTRUCTIONS."

Repeat the announcement.

NOTE:	Per regulations notification of the NRC is required to be conducted at least immediately after the 15 minute state and local notifications and not later than 1 hour after emergency declaration. This notification should NOT be done by the SEC.

_____ _____ (9) **Ensure** the NRC is notified of the ALERT. PINGP 666 **SHALL** be completed (to the extent possible) prior to notifying the NRC via the ENS red phone.

ALERT ALERT ALERT ALERT ALERT ALERT ALERT ALERT ALERT ALERT

EXAMPLE ONLY
USE CURRENT REVISION

Figure 1 PINGP 1125

PINGP 1125, Rev. 15
Page 9 of 19

ALERT ALERT ALERT ALERT ALERT ALERT ALERT ALERT ALERT ALERT

II. ALERT ACTIONS (CONTINUED)

INITIAL TIME

NOTE:	A Plant Evacuation is NOT required at an ALERT. However, a Plant Evacuation may be advantageous for personnel accountability reasons.

_____ _____ (10) **Determine** need to initiate a Plant Evacuation (F3-9). IF a Plant Evacuation is necessary, THEN:

_____ _____ a. **Designate** assembly point (F3-9, North Warehouse or Receiving Warehouse).

- May use North Warehouse IF wind is from:
  236° to 360° or
  0° to 123°

- May use Receiving Warehouse IF wind is from:
  123° to 360° or
  0° to 34°

_____ _____ b. **Ensure** radiological monitoring of assembly area and guardhouse.

_____ _____ c. **Sound** the evacuation siren (5 seconds).

_____ _____ d. **Announce** the following on the PA system:

NOTE:	During drills, the announcement should begin and end with "THIS IS A DRILL".

"ATTENTION ALL PLANT PERSONNEL. A PLANT EVACUATION HAS BEEN DECLARED. ALL EMERGENCY ORGANIZATION PERSONNEL REPORT TO AND REMAIN AT YOUR EMERGENCY DUTY STATIONS. ALL OTHER PERSONNEL SHALL EVACUATE TO THE _____"
(specify assembly point)

Repeat the announcement.

_____ _____ (11) **Monitor** Aux Building habitability and **direct** evacuation of Aux Operators to OSC IF:

a. General area rad levels >100 mr/hr; or

b. Based on Rad Protection Group recommendations.

ALERT ALERT ALERT ALERT ALERT ALERT ALERT ALERT ALERT ALERT

EXAMPLE ONLY
USE CURRENT REVISION

Figure 1 PINGP 1125

PINGP 1125, Rev. 15
Page 10 of 19

ALERT ALERT ALERT ALERT ALERT ALERT ALERT ALERT ALERT ALERT

II. ALERT ACTIONS (CONTINUED)

INITIAL TIME

(12) **Ensure:**

_____ _____ a. Onsite sampling is considered IF a fission product boundary has failed (F3-23).

_____ _____ b. Dose calculations are performed by TSC IF there is a known radioactive release.

_____ _____ (13) **Authorize** emergency overexposure (F3-12), if necessary, UNTIL the oncoming designated TSC Emergency Director has taken over this responsibility. This authority may **NOT** be delegated.

_____ _____ (14) **Escalate** the emergency class, as appropriate (F3-2).

_____ _____ (15) **Complete** a turnover to the designated TSC Emergency Director (ED) WHEN the oncoming ED is ready to assume the ED responsibilities.

_____ _____ (16) **Sign** and **date** this PINGP form on the last page.

ALERT ALERT ALERT ALERT ALERT ALERT ALERT ALERT ALERT ALERT

Figure 1 PINGP 1125

EXAMPLE ONLY
USE CURRENT REVISION

SITE AREA SITE AREA SITE AREA SITE AREA SITE AREA SITE AREA SITE AREA

III. SITE AREA EMERGENCY ACTIONS (F3-4)

Time SITE AREA Declared _____

INITIAL TIME

NOTE:	In order to adequately maintain oversight of the operational aspects of the event, it may be necessary to delegate some E-Plan duties to the unaffected unit SS.

_____ _____ (1) **Assume** the role of Emergency Director (F3-4).

NOTE:	In the case of a credible security event, if the TSC or Turbine Floor are unsafe areas, it may be safer for the SEC to perform emergency notifications from another safe location (e.g., Control Room SAS or CAS). SEC notification forms (PINGP 577, 579 & 580) are available in Control Room, SAS, TSC, CAS, and New Admin Reference Library.

_____ _____ (2) **Ensure** the SEC (pager 4427) has been summoned and starts the completion of the notification report form (PINGP 577).

NOTE:	State and local authorities SHALL be notified within 15 minutes of the declaration of an emergency.

NOTE:	It is recommended that you position yourself at the Reactor Operator's desk to hear key communications, use an ERCS terminal for monitoring CSFSTs, and solicit or answer questions of the SS.

_____ _____ (3) **Review** and **approve** the notification report form PINGP 577.

NOTE:	In the case where the SEC or Duty Chemist is NOT available, STEP (4) provides, faxing PINGP 577 to Offsite Agencies and has SAS complete the notification.

(4) IF SEC is NOT available, THEN:

- **Place** PINGP 577 facedown on the fax.
- **Dial** 5076 (or backup 4805).
- **Press** "START" button.
- **Call** SAS (ext. 4323) and **direct** them to complete 15 minute notification using PINGP 580.
- **Go to** STEP (6).

_____ _____ (5) **Direct** the SEC to complete the notifications of state and local agencies and, IF not already performed, **activate** the site Emergency Response Organization in accordance with F3-5 and PINGP 580.

SITE AREA SITE AREA SITE AREA SITE AREA SITE AREA SITE AREA SITE AREA

EXAMPLE ONLY
USE CURRENT REVISION

Figure 1 PINGP 1125

SITE AREA SITE AREA SITE AREA SITE AREA SITE AREA SITE AREA SITE AREA

III. SITE AREA EMERGENCY ACTIONS (CONTINUED)

INITIAL TIME

_____ _____ (6) **Announce** the emergency class over PA System:

NOTE:	During drills, the announcement should begin and end with "THIS IS A DRILL".

"ATTENTION ALL PLANT PERSONNEL:

A SITE AREA EMERGENCY HAS BEEN DECLARED BASED ON

_____
(Give brief description of event)

ALL MEMBERS OF THE EMERGENCY RESPONSE ORGANIZATION REPORT TO YOUR EMERGENCY DUTY STATIONS OR EMERGENCY CENTER. ALL OTHER PERSONNEL STANDBY FOR FURTHER INSTRUCTIONS."

Repeat the announcement.

NOTE:	Per regulations notification of the NRC is required to be conducted at least immediately after the 15 minute state and local notifications and not later than 1 hour after emergency declaration. This notification should NOT be done by the SEC.

_____ _____ (7) **Ensure** the NRC is notified of the emergency. PINGP 666 **SHALL** be completed (to the extent possible) prior to notifying the NRC via the ENS red phone.

SITE AREA SITE AREA SITE AREA SITE AREA SITE AREA SITE AREA SITE AREA

EXAMPLE ONLY
USE CURRENT REVISION

Figure 1 PINGP 1125

III. SITE AREA EMERGENCY ACTIONS (CONTINUED)

INITIAL TIME

NOTE: **A Plant Evacuation is required at a Site Area Emergency unless hazardous conditions prohibit it. (F3-9).**

A Site Evacuation is required when the normal onsite assembly areas (North Warehouse or Receiving Warehouse) are not habitable.

(8) IF initiating a Plant Evacuation, THEN perform:

_____ _____ a. **Designate** assembly point as North Warehouse or Receiving Warehouse (F3-9).

- May use North Warehouse IF wind is from:
  236° to 360° or
  0° to 123°
- May use Receiving Warehouse IF wind is from:
  123° to 360° or
  0° to 34°

_____ _____ b. **Ensure** radiological monitoring of assembly area and guardhouse.

_____ _____ c. **Sound** the evacuation siren (5 seconds).

_____ _____ d. **Announce** the following on the PA system:

NOTE: **During drills, the announcement should begin and end with "THIS IS A DRILL".**

"ATTENTION ALL PLANT PERSONNEL. A PLANT EVACUATION HAS BEEN DECLARED. ALL EMERGENCY ORGANIZATION PERSONNEL REPORT TO AND REMAIN AT YOUR EMERGENCY DUTY STATIONS. ALL OTHER PERSONNEL SHALL EVACUATE TO THE _____."
(specify assembly point)

Repeat the announcement.

Figure 1 PINGP 1125

EXAMPLE ONLY
USE CURRENT REVISION

SITE AREA SITE AREA SITE AREA SITE AREA SITE AREA SITE AREA SITE AREA

III. SITE AREA EMERGENCY ACTIONS (CONTINUED)

INITIAL TIME

(9) IF initiating a Site Evacuation, THEN perform:

_____ _____ a. **Designate** assembly point as the training center unless advised otherwise by REC or Emergency Manager (F3-9).

_____ _____ b. **Ensure** radiological monitoring of assembly area.

_____ _____ c. **Sound** the evacuation siren (5 seconds).

_____ _____ d. **Announce** the following on the PA system:

NOTE	**During drills, the announcement should begin and end with "THIS IS A DRILL".**

"ATTENTION ALL PLANT PERSONNEL. PERSONNEL WITHOUT EMERGENCY ASSIGNMENTS SHALL EVACUATE THE PLANT SITE IMMEDIATELY. GET YOUR CAR KEYS AND EVACUATE TO THE PARKING LOT. USE YOUR CAR OR NSP VEHICLE AND PROCEED TO _____.
(specific assembly point)

ALL EMERGENCY PERSONNEL SHOULD REMAIN AT YOUR EMERGENCY OPERATING CENTERS."

Repeat the announcement.

_____ _____ (10) **Monitor** Aux Building habitability and **direct** evacuation of Aux Operators to OSC IF:

a. General area rad levels >100 mr/hr; or

b. Based on Rad Protection Group recommendations.

(11) **Ensure:**

_____ _____ a. Onsite sampling is considered IF a fission product boundary has failed (F3-23).

_____ _____ b. Dose calculations are performed by Shift Chemist or TSC IF R-50 is in valid alarm and such action will **NOT** prevent the completion of any other critical actions needed to mitigate the event.

_____ _____ (12) IF the MIDAS 4-day Integrated Dose projection results exceed 1000 mRem TEDE or 5000 mRem Thyroid CDE (F3-8.1), THEN **re-evaluate** the emergency classification and **reclassify** to a General Emergency if appropriate. (TEDE = Total Effective Dose Equivalent, CDE = Committed Dose Equivalent)

_____ _____ (13) **Authorize** emergency overexposure (F3-12), if necessary, UNTIL the oncoming designated TSC Emergency Director has taken over this responsibility. This authority may **NOT** be delegated.

_____ _____ (14) **Escalate** the emergency class, as appropriate (F3-2).

_____ _____ (15) **Complete** a turnover to the designated TSC Emergency Director (ED) WHEN the oncoming ED is ready to assume the ED responsibilities.

_____ _____ (16) **Sign** and **date** this PINGP form on the last page.

SITE AREA SITE AREA SITE AREA SITE AREA SITE AREA SITE AREA SITE AREA

EXAMPLE ONLY
USE CURRENT REVISION

Figure 1 PINGP 1125

PINGP 1125, Rev. 15
Page 15 of 19

GENERAL GENERAL GENERAL GENERAL GENERAL GENERAL GENERAL

IV. GENERAL EMERGENCY ACTIONS (F3-4)

Time GENERAL Declared _____

INITIAL TIME

NOTE: **In order to adequately maintain oversight of the operational aspects of the event, it may be necessary to delegate some E-Plan duties to the unaffected unit SS.**

_____ _____ (1) **Assume** the role of Emergency Director (F3-4).

NOTE: **In the case of a security event, if the TSC or Turbine Floor are unsafe areas, it may be safer for the SEC to perform emergency notifications from another safe location (e.g., Control Room SAS or CAS). SEC notification forms (PINGP 577, 579 & 580) are available in Control Room, SAS, TSC, CAS, and New Admin Reference Library.**

_____ _____ (2) **Ensure** the SEC (pager 4427) has been summoned and starts the completion of the notification report form (PINGP 577).

NOTE: **State and local authorities SHALL be notified within 15 minutes of the declaration of an emergency.**

NOTE: **It is recommended that you position yourself at the Reactor Operator's desk to hear key communications, use an ERCS terminal for monitoring CSFSTs, and solicit or answer questions of the SS.**

_____ _____ (3) **Recommend** evacuation for the general public on PINGP 577 as designated in Figure 1, F3-8.1.

- IF wind ≥ 5 mph, THEN evacuate all sectors out to 2 miles AND the 5 downwind sectors out to 5 miles; AND advise remainder of plume EPZ to monitor radio/TV broadcasts for further emergency information.
- IF wind < 5 mph, THEN evacuate all sectors out to 5 miles AND advise remainder of plume EPZ to monitor radio/TV broadcasts for further emergency information.

_____ _____ (4) **Review** and **approve** the notification report form PINGP 577.

NOTE: **In the case where the SEC or Duty Chemist is NOT available, STEP (5) provides, faxing PINGP 577 to Offsite Agencies and has SAS complete the notification.**

_____ _____ (5) IF SEC is NOT available, THEN:

- **Place** PINGP 577 facedown on the fax.
- **Dial** 5076 (or backup 4805).
- **Press** "START" button.
- **Call** SAS (ext. 4323) and **direct** them to complete 15 minute notification using PINGP 580.
- **Go to** STEP (7).

_____ _____ (6) **Direct** the SEC to complete the notifications of state and local agencies and, IF not already performed, **activate** the site Emergency Response Organization in accordance with F3-5 and PINGP 580

GENERAL GENERAL GENERAL GENERAL GENERAL GENERAL GENERAL

EXAMPLE ONLY
USE CURRENT REVISION

Figure 1 PINGP 1125

PINGP 1125, Rev. 15
Page 16 of 19

GENERAL GENERAL GENERAL GENERAL GENERAL GENERAL GENERAL

IV. GENERAL EMERGENCY ACTIONS (CONTINUED)

INITIAL TIME

_____ _____ (7) **Announce** the emergency class over PA System:

NOTE:	During drills, the announcement should begin and end with "THIS IS A DRILL".

"ATTENTION ALL PLANT PERSONNEL:

A GENERAL EMERGENCY HAS BEEN DECLARED BASED ON

_____.
(Give brief description of event)

ALL MEMBERS OF THE EMERGENCY RESPONSE ORGANIZATION REPORT TO YOUR EMERGENCY DUTY STATIONS OR EMERGENCY CENTER. ALL OTHER PERSONNEL STANDBY FOR FURTHER INSTRUCTIONS."

Repeat the announcement.

NOTE:	Per regulations notification of the NRC is required to be conducted at least immediately after the 15 minute state and local notifications and not later than 1 hour after emergency declaration. This notification should NOT be done by the SEC.

_____ _____ (8) **Ensure** the NRC is notified of the emergency. PINGP 666 **SHALL** be completed (to the extent possible) prior to notifying the NRC via the ENS red phone.

GENERAL GENERAL GENERAL GENERAL GENERAL GENERAL GENERAL

EXAMPLE ONLY
USE CURRENT REVISION

Figure 1 PINGP 1125

PINGP 1125, Rev. 15
Page 17 of 19

GENERAL GENERAL GENERAL GENERAL GENERAL GENERAL GENERAL

IV. GENERAL EMERGENCY ACTIONS (CONTINUED)

INITIAL TIME

NOTE:	**A Plant Evacuation is required at a General Emergency unless hazardous conditions prohibit it (F3-9) or it has already been completed.** **A Site Evacuation is required when the normal onsite assembly areas (North Warehouse or Receiving Warehouse) are not habitable.**

(9) IF initiating a Plant Evacuation, THEN perform:

_____ _____ a. **Designate** assembly point as North Warehouse or Receiving Warehouse (F3-9).

- May use North Warehouse IF wind is from:
  236° to 360° or
  0° to 123°
- May use Receiving Warehouse IF wind is from:
  123° to 360° or
  0° to 34°

_____ _____ b. **Ensure** radiological monitoring of assembly area and guardhouse.

_____ _____ c. **Sound** the evacuation siren (5 seconds).

_____ _____ d. **Announce** the following on the PA system:

NOTE:	**During drills, the announcement should begin and end with "THIS IS A DRILL".**

"ATTENTION ALL PLANT PERSONNEL. A PLANT EVACUATION HAS BEEN DECLARED. ALL EMERGENCY ORGANIZATION PERSONNEL REPORT TO AND REMAIN AT YOUR EMERGENCY DUTY STATIONS. ALL OTHER PERSONNEL SHALL EVACUATE TO THE _____.
(specific assembly point)

Repeat the announcement.

GENERAL GENERAL GENERAL GENERAL GENERAL GENERAL GENERAL

EXAMPLE ONLY
USE CURRENT REVISION

Figure 1 PINGP 1125

GENERAL GENERAL GENERAL GENERAL GENERAL GENERAL GENERAL

IV. GENERAL EMERGENCY ACTIONS (CONTINUED)

INITIAL TIME

(10) IF initiating a Site Evacuation, THEN perform:

_____ _____ a. **Designate** assembly point as the training center unless advised otherwise by REC or Emergency Manager (F3-9).

_____ _____ b. **Ensure** radiological monitoring of assembly area.

_____ _____ c. **Sound** the evacuation siren (5 seconds).

_____ _____ d. **Announce** the following on the PA system:

NOTE:	**During drills, the announcement should begin and end with "THIS IS A DRILL".**

"ATTENTION ALL PLANT PERSONNEL. PERSONNEL WITHOUT EMERGENCY ASSIGNMENTS SHALL EVACUATE THE PLANT SITE IMMEDIATELY. GET YOUR CAR KEYS AND EVACUATE TO THE PARKING LOT. USE YOUR CAR OR NSP VEHICLE AND PROCEED TO _____.
(specific assembly point)

ALL EMERGENCY PERSONNEL SHOULD REMAIN AT YOUR EMERGENCY OPERATING CENTERS."

Repeat the announcement.

_____ _____ (11) **Monitor** Aux Building habitability and **direct** evacuation of Aux Operators to OSC IF:

a. General area rad levels >100 mr/hr; or

b. Based on Rad Protection Group recommendations.

(12) **Ensure:**

_____ _____ a. Onsite sampling is considered IF a fission product boundary has failed (F3-23).

_____ _____ b. Dose calculations are performed by Shift Chemist or TSC IF R-50 is in valid alarm and such action will **NOT** prevent the completion of any other critical actions needed to mitigate the event.

_____ _____ (13) **Authorize** offsite protective action recommendations changes (F3-8.1), if necessary, UNTIL the oncoming designated TSC Emergency Director has taken over this responsibility. This authority may **NOT** be delegated.

_____ _____ (14) **Authorize** emergency overexposure (F3-12), if necessary, UNTIL the oncoming designated TSC Emergency Director has taken over this responsibility. This authority may **NOT** be delegated.

_____ _____ (15) **Complete** a turnover to the designated TSC Emergency Director WHEN the oncoming ED is ready to assume the ED responsibilities.

_____ _____ (16) **Sign** and **date** this PINGP form on last page.

GENERAL GENERAL GENERAL GENERAL GENERAL GENERAL GENERAL

EXAMPLE ONLY
USE CURRENT REVISION

Figure 1 PINGP 1125

PINGP 1125, Rev. 15
Page 19 of 19

Sign AFTER NUE termination or turnover to oncoming Emergency Director.

Shift Manager/Shift Supervisor E.D.	Date/Time
Designated TSC Emergency Director	Date/Time

Figure 2 PINGP 571

EXAMPLE ONLY
USE CURRENT REVISION

PINGP 571, Rev 25
Page 1 of 6
Retention: Life
Document Type: 7.36I

TSC EMERGENCY DIRECTOR CHECKLIST

CR TURNOVER | CR TURNOVER | CR TURNOVER | CR TURNOVER | CR TURNOVER

___ 1. **Determine** Plant Status.

___ 1.1. **Report** to Control Room and become familiar with the sequence of events.

___ 1.2. **Get** copy of completed PINGP 1125, SM/ED Check List, and **review** the activities that have been completed.

___ 1.3. **Note** the items that have not been completed and **ensure** they are eventually addressed.

___ 2. IF this is a security event, THEN **ensure** the guidelines given in F3-31 are considered.

___ 3. IF the event is an NUE which is technically challenging or complex AND you have decided to activate the ERO, THEN:

___ 3.1. **Direct** the SEC to activate ERO pagers (for key responders) and activate the ERO automated telephone callout system (for all ERO) per the Emergency Response Organization Activation for Non-Security Events PINGP 1384.

___ 3.2. **Direct** the conducting of the following plant page over the PA System:

NOTE:	**During drills the announcement should begin and end with "THIS IS A DRILL."**

"ATTENTION ALL PLANT PERSONNEL:

ALL MEMBERS OF THE EMERGENCY RESPONSE ORGANIZATION REPORT TO YOUR EMERGENCY DUTY STATIONS OR EMERGENCY CENTER. ALL OTHER PERSONNEL STANDBY FOR FURTHER INSTRUCTIONS."

Repeat the announcement.

___ 4. AFTER you and the SM/ED have agreed to transfer Emergency Director responsibilities, THEN **announce** you are assuming Emergency Director responsibilities to the Shift Manager, Unit 1 Supervisor and Unit 2 Supervisor.

COMMENTS:

_____ SM/ED _____ Time

_____ TSC Emergency Director _____ Time

CR TURNOVER | CR TURNOVER | CR TURNOVER | CR TURNOVER | CR TURNOVER

J:\TEMPLATE\0571 TSC Emergency Director Checklist.dot

Figure 2 - PINGP 571

EXAMPLE ONLY USE CURRENT REVISION

PINGP 571, Rev 25
Page 2 of 6

TSC EMERGENCY DIRECTOR CHECKLIST

TSC ACTIVATION | TSC ACTIVATION | TSC ACTIVATION | TSC ACTIVATION | TSC ACTIVATION

___ 1. **Sign-in** on the TSC Personnel Status Board. (The TSC Coordinator will inform you when the TSC is operational.)

___ 2. **Update** TSC personnel of plant status and **declare** TSC operational.

___ 2.1. Before you start your expectations announcement:

- **Review** copy of Emergency Notification Report Form (PINGP 577) (TSC Coord. should provide.)
- **Put** on ED hat. • **Test** the microphone. • **Stand.** • **Direct** TSC Bell to be rung.

___ 2.2. Make the following announcement (example of items to discuss):

"Attention all TSC workers. (Wait for all to be quiet and repeat announcement if necessary.)

I am (given name) and I am the Emergency Director.

I want all to listen and follow my expectations so we can have clear, concise integrated communications.

The TSC has been determined to be operational.

My expectations for TSC operation are:

- All communications should follow the plant's communications standard using 3-way communication and the phonetic alphabet.
- All personnel **SHALL** stop your conversations and listen to plant page announcements.
- All personnel **SHALL** stop your conversations and listen to facility updates.
- If someone is assigned a job or task, acknowledge the task you are going to do (use 3-Way Communication).
- You should follow the TSC Update Guide, PINGP 1395, and keep your review as brief as possible.
  - Communicate only that information that should be heard by all.
  - Do not repeat information from previous updates unless it is necessary.
  - Let us attempt to keep facility updates to less than 8 minutes.

Synchronize your watches with the TSC wall clock now.

All personnel are to check in with the OSC before working in the field.

The present situation is:

_____

_____

Does anyone have anything to add?"

"Our current priorities are:

_____

_____

All personnel who are NOT assigned a specific TSC task please move to the TSC Lower Level or I&C Conference Room. Let you supervisor know where you are.

The next TSC Update will occur at _____ hours. (TSC Coordinator will notify OSC & EOF of next Facility Update times.)

This is the end of the TSC update."

TSC ACTIVATION | TSC ACTIVATION | TSC ACTIVATION | TSC ACTIVATION | TSC ACTIVATION

Figure 2 - PINGP 571

EXAMPLE ONLY USE CURRENT REVISION

PINGP 571, Rev 25
Page 3 of 6

TSC EMERGENCY DIRECTOR CHECKLIST

TSC ACTIVATION | TSC ACTIVATION | TSC ACTIVATION | TSC ACTIVATION | TSC ACTIVATION

___ 3. **Direct** the Event Evaluator to assess plant conditions for possible reclassifications.

> **NOTE:** **A Plant Evacuation may be initiated during an Alert and SHALL be initiated during a Site Area or General Emergency unless radiological or environmental conditions prohibit it. Consider early release of non-essential personnel at the Alert.**

___ 4. **Determine** need or advantages to conduct early release or dismissal of nonessential personnel (F3-9).

___ 5. IF the event was initiated by a worker's performance, THEN **consider** Fitness for Duty "for cause testing".

___ 6. **Establish** communications with EOF to assess their readiness to assume offsite responsibilities (offsite communications, PAR formulation, offsite field team control and dose assessment).

___ 6.1. **Establish** a transfer time with EM.

___ 6.2. **Transfer** offsite responsibilities to EOF and **announce** the transfer in TSC.

___ 7. **Determine** when long-term staffing requirements should be addressed. (TSC Coordinator will establish 24-hour coverage when directed.)

___ 8. **Update** OSC Coordinator (x4424) and Emergency Manager (x5242) of plant priorities after Facility Updates.

> **NOTES:**
> **Emergency Director major responsibilities:**
> 1. **Overall Command & Control of plant emergency response.**
> 2. **Anticipant emergency reclassifications.**
> 3. **Direct setting of work priorities on all major emergency work.**
> 4. **Ensure Offsite Agencies are being updated of emergency status.**
> 5. **Core, RCS, and Containment fission product boundaries.**
> 6. **Safety of plant personnel and workers.**
> 7. **Safety of the public.**

___ 9. IF this was an NUE classification and the plant is escalating to an Alert emergency classification, THEN **ensure** the Emergency Notification Report Form (PINGP 577) is completed by the REC and brought to you for your review and approval.

___ 10. IF plant is terminating the emergency, THEN **consider** the need to transition to Recovery (See F3-2).

___ 11. IF plant is escalating the emergency classification, THEN **proceed** to the SITE AREA or GENERAL emergency section of this checklist.

TSC ACTIVATION | TSC ACTIVATION | TSC ACTIVATION | TSC ACTIVATION | TSC ACTIVATION

Figure 2 - PINGP 571

EXAMPLE ONLY USE CURRENT REVISION

PINGP 571, Rev 25
Page 4 of 6

TSC EMERGENCY DIRECTOR CHECKLIST

SITE AREA | SITE AREA | SITE AREA | SITE AREA | SITE AREA

___ 1. IF EOF has not taken offsite responsibilities, THEN **ensure** the Notification Report Form (PINGP 577) is completed by the REC and brought to you for your review and approval, OTHERWISE immediately **direct** EM to escalate to a Site Area Emergency.

NOTE	**A Plant Evacuation SHALL be initiated during a Site Area or General Emergency UNLESS radiological or environmental conditions prohibit it. IF and Plant Evacuation cannot be conducted, THEN a Site Evacuation should be conducted. (F3-9)**

___ 2. **Direct** Plant Evacuation activities (F3-9):

___ 2.1. **Direct** REC to proclaim the appropriate Assembly Point.

___ 2.2. **Direct** Operations Group Leader to ensure Control Room Plant Evacuation siren is activated and plant page is conducted using F3-9 and designated Assembly Point.

___ 2.3. **Direct** Security Group Leader to:

- Ensure Plant Evacuation and Accountability activities are conducted by security.
- Complete accountability within 30 minutes after evacuation plant page (F3-10).
- Ensure personnel outside the plant protected areas have evacuated to the Assembly Point.

___ 3. **Update** OSC Coordinator (x4424) and Emergency Manager (x5242) of plant priorities after Facility Updates.

NOTE	**Emergency Director major responsibilities:** **1. Overall Command & Control of plant emergency response.** **2. Anticipant emergency reclassifications.** **3. Direct setting of work priorities on all major emergency work.** **4. Ensure Offsite Agencies are being updated of emergency status.** **5. Core, RCS, and Containment fission product boundaries.** **6. Safety of plant personnel and workers.** **7. Safety of the public.**

___ 4. IF plant is escalating to a General Emergency, THEN **proceed** to the GENERAL emergency section of this checklist.

___ 5. IF plant is terminating the emergency, THEN **advise** EM and **proceed** to the recovery procedure, F3-30.

SITE AREA | SITE AREA | SITE AREA | SITE AREA | SITE AREA

Figure 2 - PINGP 571

EXAMPLE ONLY USE CURRENT REVISION

PINGP 571, Rev 25
Page 5 of 6

TSC EMERGENCY DIRECTOR CHECKLIST

GENERAL | GENERAL | GENERAL | GENERAL | GENERAL

NOTES

1. **Initial PARs for a General Emergency is evacuate 2 mile radius and five miles downwind in the affected sectors.**
2. **The authority to approve PARs remains with ED until the EM assumes this authority from the ED. This authority may not be delegated.**

___ 1. IF EOF has not taken offsite responsibilities, THEN **ensure** the Notification Report Form (PINGP 577) is completed by the REC and brought to you for your review and approval, OTHERWISE immediately **direct** EM to escalate to a General Emergency and issue PARs.

NOTE

A Plant Evacuation SHALL be initiated during a Site Area or General Emergency UNLESS radiological or environmental conditions prohibit it. IF and Plant Evacuation cannot be conducted, THEN a Site Evacuation should be conducted. (F3-9)

___ 2. IF not already conducted, THEN **direct** Plant Evacuation activities (F3-9):

___ 2.1. **Direct** REC to proclaim the appropriate Assembly Point.

___ 2.2. **Direct** Operations Group Leader to ensure Control Room Plant Evacuation siren is activated and plant page is conducted using F3-9 and designated Assembly Point.

___ 2.3. **Direct** Security Group Leader to:

- Ensure Plant Evacuation and Accountability activities are conducted by security.
- Complete accountability within 30 minutes after evacuation plant page (F3-10).
- Ensure personnel outside the plant protected areas have evacuated to the Assembly Point.

___ 3. **Update** OSC Coordinator (x4424) and Emergency Manager (x5242) of plant priorities after Facility Updates.

NOTES

Emergency Director major responsibilities:

1. **Overall Command & Control of plant emergency response.**
2. **Anticipant emergency reclassifications.**
3. **Direct setting of work priorities on all major emergency work.**
4. **Ensure Offsite Agencies are being updated of emergency status.**
5. **Core, RCS, and Containment fission product boundaries.**
6. **Safety of plant personnel and workers.**
7. **Safety of the public.**

___ 4. **Implement** TSC SAM process, as necessary.

___ 4.1. **Direct** the Operation Group Leader to ensure the Accident Evaluation Team Leader is staffed.

___ 4.2. **Direct** TSC Coordinator to **ensure** NRC is notified of transition to SAM.

___ 4.3. **Address** 10CFR 50.54(x) & (y) and 50.72 requirements, as necessary.

___ 5. **Terminate** the emergency class, when appropriate. **Advise** EM, as appropriate. (F3-2: classifications or F3-30: termination and recovery).

GENERAL | GENERAL | GENERAL | GENERAL | GENERAL

EXAMPLE ONLY
USE CURRENT REVISION

Figure 2 - PINGP 571

PINGP 571, Rev 25
Page 6 of 6

TSC EMERGENCY DIRECTOR CHECKLIST

RELIEF TURNOVER | RELIEF TURNOVER | RELIEF TURNOVER | RELIEF TURNOVER | RELIEF TURNOVER

COMMENTS:

_____ Emergency Director

_____ Date/Time

___ 1. IF turnover of ED responsibilities is required, THEN the on-coming ED should **perform** a thorough review of the sequence of events and conditions before turnover. They should **use** PINGP 571 as a guide.

___ 2. WHEN the off-going TSC shift has been relieved, THEN the on-coming ED should:

- ___ 2.1. **Announce** to TSC that the off-going shift has been relieved.
- ___ 2.2. **Notify** the EM that the off-going TSC shift has been relieved.
- ___ 2.3. **Notify** the OSC Coordinator that the off-going TSC shift has been relieved.

_____ Relief Emergency Director

_____ Date/Time

RELIEF TURNOVER | RELIEF TURNOVER | RELIEF TURNOVER | RELIEF TURNOVER | RELIEF TURNOVER

Figure 3 PINGP 1095

EXAMPLE ONLY
USE CURRENT REVISION

PINGP 1095, Rev. 2
Page 1 of 1
Document Type: 7.36T
Retention: Lifetime

OSC OPERATIONS ADVISOR CHECKLIST

The OSC Operations Advisor position should be staffed by an available Operations person from the Operations Support Pool.

NOTE:	**Direction and control of outplant duty operators remains with the Control Room.**

INITIAL

NOTE:	**The Emergency Work Status Board is used for tracking emergency work repair groups and operational work activities. See the posted job aid for guidance.**

_____ 1. Designate an individual (preferably from the Operations Support Pool) to update the OSC Emergency Work Status Board. (PINGP 1108)

_____ 2. Provide assistance to the OSC Coordinator in an advisory capacity.

_____ 3. Assist the OSC Coordinator, as appropriate, on the operational aspects of requested emergency work.

_____ 4. Assist, as necessary, the facilitation of directed emergency work requests.

_____ 5. If available, consider sending an Operations Support Pool individual to the EOF to assist the EOF Technical Support Supervisor in an advisory capacity.

_____ 6. Direct Operations Business Support Specialist (if available) to bring list of additional operators to the OSC Coordinator, to forward to Control Room.

OSC Ops Advisor: _____

Date: _____

J:\TEMPLATE\1095 OSC Operations Advisor Checklist.dot

Figure 4 PINGP 572

EXAMPLE ONLY USE CURRENT REVISION

PINGP 572, Rev. 32
Page 1 of 6
Retention: Life of Plant
Document Type: 7.36K

RADIOLOGICAL EMERGENCY COORDINATOR CHECKLIST

ACTIVATION | ACTIVATION | ACTIVATION | ACTIVATION | ACTIVATION

___ 1. IF this is an NUE, THEN **assign** another person to complete PINGP 1246 (WI/MN Health Dept. Initial Call Back Info.) in preparation for WI/MN call back.

___ 2. **Determine** Plant Status and if releases are occurring.

___ 3. **Determine** Radiation Protection Support Staff for: (See front of EP Phone Directory for PI ERO Roster.)

- REC Assistant:_____
- MIDAS Operator in TSC (PINGP 1312):_____
- Field Tm Communicator (PINGP 1156):_____
- Rad Status Board Keeper:_____
- Phone Communicator:_____
- OSC Rad Prot Coord:_____
- EOF Count Room RPS:_____
- Assembly Pt. Coord (should prepare assembly pt.) (PINGP 911): _____
- MIDAS Operator at EOF (PINGP 1312):_____
- RPSS or RPSS Assistant at EOF (if needed):_____

___ 4. **Direct** REC Area Staff to sign in at TSC Personnel Status Board.

___ 5. **Dispatch** and **coordinate** offsite radiation survey teams, via Field Team Communicator in accordance with the following:

- F3-15 Airborne Release - Team #1 Plume Search & Sampling
  - Team #2 Plume Search & Sampling

  OR
- F3-16 Liquid Release - Team #1 Lock and Dam #3 Sampling
  - Team #2 Recycle and Discharge Canal Sampling

___ 6. **Dispatch** 4 NPSA from OSC to go to EOF (Field Team Drivers & Sample Couriers).

___ 7. IF this is an off hour activation, THEN **direct** Field Team Communicator to question Field Team Personnel per Fitness for Duty Program (5AWI 3.15.1).

___ 8. IF plume is traveling towards Minnesota OR Wisconsin bluffs, THEN **direct** Field Team Communicator to consider effects of plume diversion along valley and look for plume up and down the valley.

___ 9. **Evaluate** survey rad data and **supervise** development of plume map. REC should decide if and when plume search and sampling in upwind sectors is necessary.

___ 10. **Direct** MIDAS Operator to obtain meteorological data (F3-13.4 and F3-13.5) and radiation monitor readings.

___ 11. **Direct** MIDAS Operator to obtain offsite dose projection calculations for actual monitored releases and potential releases (F3-13). (Follow-up Message, PINGP 582, should be sent to states approximately 30-minute intervals.)

___ 12. **Request** alternate meteorological data and weather forecast information as necessary (F3-13.5 and F3-13.6).

ACTIVATION | ACTIVATION | ACTIVATION | ACTIVATION | ACTIVATION

EXAMPLE ONLY USE CURRENT REVISION

Figure 4 PINGP 572

PINGP 572, Rev. 32
Page 2 of 6

RADIOLOGICAL EMERGENCY COORDINATOR CHECKLIST

ACTIVATION | ACTIVATION | ACTIVATION | ACTIVATION | ACTIVATION

___ 13. **Ensure** MN & WI state health departments are updated and the "Emergency Notification Follow-up Messages" (PINGP 582) are facsimiled to the state EOCs at approximately 30-minute intervals.

___ 14. **Instruct, dispatch** and **coordinate** onsite radiation survey teams (inplant surveys, smears and air sampling) (F3-14.1).

___ 15. **Ensure** radiological monitoring is initiated for the TSC environment utilizing the CAM and R-68 and/or AM-2 (F3-6).

___ 16. **Direct** OSC Rad Coordinator to monitor the habitability of the Auxiliary Building and report results to you.

___ 17. IF the general area rad levels in Auxiliary Building are > 100 mR/hr OR based on Rad Protection Group surveys, THEN **recommend** to the Emergency Director that the Aux Operators evacuate to the OSC.

___ 18. Considering met data, release data and surveys; **determine** potential dose rates or contamination for non-rad controlled areas of plant (e.g., NPD, Environ. Lab, Gate House, Badge Issue, etc).

___ 19. **Direct** Assembly Point Coord which assembly point to use based on rad hazards and wind direction (F3-9).

___ 20. **Consider** need for any special plant wide announcements concerning "avoiding hazardous areas onsite". (TSC Coordinator ensures plant wide emergency announcements are conducted, as needed.)

___ 21. **Consider** recommending early release of nonessential personnel per F3-9, if time allows.

___ 22. **Establish** and **maintain** communications with the RPSS.

___ 23. **Turnover** the offsite survey responsibilities to the RPSS:

- ___ 23.1. **Inform** RPSS when next "Emergency Notification Follow-up Messages" to State EOCs are due.
- ___ 23.2. **Remind** RPSS to notify Minnesota and Wisconsin State Health Departments when EOF takes over all offsite functions.

___ 24. **Determine** RPS sampling priorities per F3-23 (number in order) and **specify** protective clothing/respiratory protection requirements for sampling team.

- ___ Primary Sample - Pressurized/Unpressurized
- ___ Secondary Sample
- ___ Shield Building Stack Sample (consider sample plateout, F3-20)
- ___ Containment Air Sample
  - Liquid
  - Filtered Gas
  - Iodine/Particulate
  - Other

___ 25. IF radioactive release is in progress OR radioactive samples are being shipped to EOF, THEN **initiate** PINGP 1405, Request for Emergency Exemption for Transporting of Radioactive Samples.

___ 26. **Provide** periodic updates to the Emergency Director & TSC Staff (See TSC Update Guide, PINGP 1395).

___ 27. WHEN the NRC requests the establishment of the HPN, THEN **staff** the HPN phone and **call** one of the listed HPN phone numbers.

___ 28. **Consider** the need for outside contractors for additional services.

___ 29. IF this was an NUE classification and the plant is escalating to an Alert emergency classification, THEN **ensure** PINGP 577, "Emergency Notification Report Form", is completed and taken to ED for review and approval.

___ 30. IF plant is escalating the emergency classification, THEN **proceed** to the SITE AREA or GENERAL emergency section of this checklist.

ACTIVATION | ACTIVATION | ACTIVATION | ACTIVATION | ACTIVATION

EXAMPLE ONLY USE CURRENT REVISION

Figure 4 PINGP 572

PINGP 572, Rev. 32
Page 3 of 6

RADIOLOGICAL EMERGENCY COORDINATOR CHECKLIST

SITE AREA | SITE AREA | SITE AREA | SITE AREA | SITE AREA

___ 1. **Use** F3-8 and PINGP 585, PAR Checklist for formulating all Protective Action Recommendations.

___ 2. **Ensure** "Casino Precautionary Shutdown" is considered for Site Area Emergency declaration per PINGP 585. (The Indian Community Stutter Siren will be activated at SAE level by the SEC to alert the Indian Community of the SAE, regardless of Casino shutdown decision.)

___ 3. **Complete** PINGP 577, "Emergency Notification Report Form", and **take** to ED for review and approval.

___ 4. **Direct** setup of TSC Contamination Control, IF necessary.

- ___ 4.1. **Establish** contamination control for TSC by setting up a frisker station (frisker & step-off pad) at TSC entrance (F3-6) (Frisker & step-off pad near Ventilation Control Cabinet).
- ___ 4.2. **Station** a person (NPSA) at TSC entrance to maintain TSC dosimetry and monitor frisking using PINGP 652.
- ___ 4.3. **Post** "Step Off Pad Notice" signs at the TSC outer entrance, East End Lower Level (stored in Ventilation Control Cabinet).
- ___ 4.4. **Direct** all TSC Personnel to go through OSC for all plant activities to ensure proper rad. control and monitoring.

___ 5. **Consider** the necessity of Secondary Access Control (F3-21).

___ 6. IF the general area rad levels in Auxiliary Building are > 100 mR/hr OR based on Rad Protection Group surveys, THEN **recommend** to the Emergency Director that the Aux Operators evacuate to the OSC.

___ 7. Considering met data, release data and surveys; **determine** potential dose rates or contamination for non-rad controlled areas of plant (e.g., NPD, Environ. Lab, Gate House, Badge Issue, etc).

___ 8. **Consider** need for any special plant wide announcements concerning "avoiding hazardous areas onsite". (TSC Coordinator ensures plant wide emergency announcements are conducted, as needed.)

___ 9. **Recommend** overexposure limits and/or use of KI for emergency workers, field teams, work teams, to Emergency Director, as necessary (F3-12, F3-18 & F3-19).

___ 10. IF dose rate is detected in the TSC, THEN **request** TSC Staff to check their SRDs. (Protective actions for the TSC are found in F3-6.)

___ 11. **Provide** periodic updates to the Emergency Director & TSC Staff (See TSC Update Guide, PINGP 1395).

___ 12. Periodically **update** the Assembly Pt. Coordinator.

___ 13. Periodically **update** the RPSS.

___ 14. WHEN the NRC requests the establishment of the HPN, THEN **staff** the HPN phone and **call** one of the listed HPN phone numbers.

SITE AREA | SITE AREA | SITE AREA | SITE AREA | SITE AREA

Figure 4 PINGP 572

EXAMPLE ONLY
USE CURRENT REVISION

PINGP 572, Rev. 32
Page 4 of 6

RADIOLOGICAL EMERGENCY COORDINATOR CHECKLIST

[redacted]

___ 15. **Determine** RPS sampling priorities per F3-23 (number in order) and specify protective clothing/respiratory protection requirements for sampling team.

- ___ Primary Sample - Pressurized/Unpressurized
- ___ Secondary Sample
- ___ Shield Building Stack Sample (consider sample plateout, F3-20)
- ___ Containment Air Sample
  - Liquid
  - Filtered Gas
  - Iodine/Particulate
  - Other

___ 16. IF plant is escalating to a General Emergency, THEN **proceed** to the GENERAL emergency section of this checklist.

___ 17. IF plant is terminating the emergency, THEN **proceed** to the RECOVERY procedure, F3-30.

[redacted]

EXAMPLE ONLY USE CURRENT REVISION

Figure 4 PINGP 572

PINGP 572, Rev. 32
Page 5 of 6

RADIOLOGICAL EMERGENCY COORDINATOR CHECKLIST

GENERAL | GENERAL | GENERAL | GENERAL | GENERAL

___ 1. **Use** F3-8 and PINGP 585, PAR Checklist for formulating all Protective Action Recommendations.

___ 2. **Complete** PINGP 577, "Emergency Notification Report Form", and **take** to ED for review and approval.

___ 3. IF NOT already done AND it is necessary, THEN **direct** setup of TSC Contamination Control.

- ___ 3.1. **Establish** contamination control for TSC by setting up a frisker station (frisker & step-off pad) at TSC entrance (F3-6) (Frisker & step-off pad near Ventilation Control Cabinet).
- ___ 3.2. **Station** a person (NPSA) at TSC entrance to maintain TSC dosimetry and monitor frisking using PINGP 652.
- ___ 3.3. **Post** "Step Off Pad Notice" signs at the TSC outer entrance, East End Lower Level (stored in Ventilation Control Cabinet).
- ___ 3.4. **Direct** all TSC Personnel to go through OSC for all plant activities to ensure proper rad. control and monitoring.

___ 4. **Consider** the necessity of Secondary Access Control (F3-21).

___ 5. IF the general area rad levels in Auxiliary Building are > 100 mR/hr OR based on Rad Protection Group surveys, THEN **recommend** to the Emergency Director that the Aux Operators evacuate to the OSC.

___ 6. Considering met data, release data and surveys; **determine** potential dose rates or contamination for non-rad controlled areas of plant (e.g., NPD, Environ. Lab, Gate House, Badge Issue, etc).

___ 7. **Consider** need for any special plant wide announcements concerning "avoiding hazardous areas onsite". (TSC Coordinator ensures plant wide emergency announcements are conducted, as needed.)

___ 8. **Recommend** overexposure limits and/or use of KI for emergency workers, field teams, work teams, to Emergency Director, as necessary (F3-12, F3-18 & F3-19).

___ 9. IF dose rate is detected in the TSC, THEN **request** TSC Staff to check their SRDs. (Protective actions for the TSC are found in F3-6.)

___ 10. **Provide** periodic updates to the Emergency Director & TSC Staff (See TSC Update Guide, PINGP 1395).

___ 11. Periodically **update** the Assembly Pt. Coordinator.

___ 12. Periodically **update** the RPSS.

___ 13. WHEN the NRC requests the establishment of the HPN, THEN **staff** the HPN phone and **call** one of the listed HPN phone numbers.

___ 14. **Determine** RPS sampling priorities per F3-23 (number in order) and specify protective clothing/respiratory protection requirements for sampling team.

- ___ Primary Sample - Pressurized/Unpressurized
- ___ Secondary Sample
- ___ Shield Building Stack Sample (consider sample plateout, F3-20)
- ___ Containment Air Sample
  - Liquid
  - Filtered Gas
  - Iodine/Particulate
  - Other

___ 18. IF plant is terminating the emergency, THEN **proceed** to the RECOVERY procedure, F3-30.

GENERAL | GENERAL | GENERAL | GENERAL | GENERAL

EXAMPLE ONLY
USE CURRENT REVISION

Figure 4 PINGP 572

PINGP 572, Rev. 32
Page 6 of 6

RADIOLOGICAL EMERGENCY COORDINATOR CHECKLIST

RELIEF TURNOVER | RELIEF TURNOVER | RELIEF TURNOVER | RELIEF TURNOVER | RELIEF TURNOVER

COMMENTS:

Radiological Emergency Coordinator — Date/Time

___ 1. IF turnover of REC responsibilities is required, THEN the on-coming REC should **perform** a thorough review of the sequence of events and conditions before turnover. They should **use** PINGP 572 as a guide.

___ 2. WHEN the off-going shift has been relieved, THEN **inform** the ED and **update** the TSC Personnel Status Board.

Relief Radiological Emergency Coordinator — Date/Time

RELIEF TURNOVER | RELIEF TURNOVER | RELIEF TURNOVER | RELIEF TURNOVER | RELIEF TURNOVER

Figure 5 PINGP 573

EXAMPLE ONLY USE CURRENT REVISION

PINGP 573, Rev. 48
Page 1 of 5
Retention: Life of Plant
Document Type: 7.36G

TECHNICAL SUPPORT CENTER COORDINATOR CHECKLIST

ACTIVATION | ACTIVATION | ACTIVATION | ACTIVATION | ACTIVATION

Time of Classification _____

___ 1. **Direct** all TSC staff to sign in at TSC Personnel Status Board.

___ 2. **Assign** a TSC Coord Assistant to assist with TSC Coordinator tasks (PINGP 573). (Use of an assistant allows you to be available to the ED while your assistant completes remote EOF Coordinator duties.)

___ 3. **Designate** the following positions and **refer** them to the referenced procedure: (See front of EP Phone Directory for PI ERO Roster.)

- Assign a TSC Coord Assistant (PINGP 573):_____
- Record Keeper (F3-24, ED Log & PINGP 1108):_____
- Technical CR-TSC-EOF 3-Way Communicators:
  - Control Room (PINGP 1338) (Use TSC engineer for initial setup, turn over to Licensed Ops Staff person, if available.):_____
  - In Tech Support Center (PINGP 1338):_____
- Event Status Board Recorder (F3-26.1):_____
- Emerg Work Status Board Keeper (Posted Job Aid):_____
- ERCS Operator (F3-26.1):_____
- Event Evaluator (SM or ED) (F3-2):_____
- ENS Communicator (Red Phone & PINGP 1296):_____
- Plant Wide Announcements (PINGP 1106):_____

___ 4. AFTER all the green positions on the TSC Personnel Status Board are filled, THEN **notify** the ED that the TSC is operational.

___ 5. **Verify** the OSC is operational by calling the OSC Coordinator (x4424) and report results to ED.

___ 6. **Direct** TSC Coordinator Assistant to:

___ 6.1. **Post** magnetic chain "no entry" & "no exit" signs on upper TSC West door to minimize SEC disturbance from personnel entering upper West door. (Signs are stored in TSC Supply Cabinet.)

___ 6.2. **Verify** TSC clocks are synchronized with ERCS clock within 1 minute.

___ 6.3. **Procure** copy of completed PINGP 577 from SEC for TSC ED to review upon arrival.

___ 6.4. **Direct** TSC Logistics person (Business Support, PINGP 1188) to ensure transport of the Electrical Transition Files from New Admin. Building to TSC lower level Tech. Resource Area.

___ 6.5. **Shut** TSC East Door by stairs, **start** TSC Clean Up System (F3-6) and **post** magnetic signs on East and West doors (signs stored in Ventilation Control Cabinets).

___ 6.6. **Set** up TSC Sound System (microphones and Job Aid are located on East End TSC near mic system amplifier).

___ 6.7. **Verify** plant PA speaker volume settings are appropriately turned up.

___ 6.8. **Remind** each work group to verify that their telephones are plugged in and the ringer is on.

___ 6.9. **Verify** the Operations Group Leader is using PINGP 1337, Operations Group Leader Checklist.

ACTIVATION | ACTIVATION | ACTIVATION | ACTIVATION | ACTIVATION

Figure 5 PINGP 573

EXAMPLE ONLY USE CURRENT REVISION

PINGP 573, Rev. 48
Page 2 of 5

TECHNICAL SUPPORT CENTER COORDINATOR CHECKLIST

ACTIVATION | ACTIVATION | ACTIVATION | ACTIVATION | ACTIVATION

___ 7. **Direct** the Recorder (Record Keeper) to:

___ 7.1. Assist the ED by answering the ED phone when they are not able to answer it.

___ 7.2. Keep log of work priorities from TSC Emergency Work Status Board, PINGP 1108.

___ 7.3. Keep the official ED Log.

___ 8. **Use** cell phone (located by TSC window) for backup communications if major loss of communications is experienced. Keys to lock box are located in locker.

___ 9. **Ensure** SEC has completed required notifications (PINGP 577) and is periodically updated of plant status.

___ 10. WHEN the EOF has been activated and taken offsite communication responsibilities, **ensure** the SEC knows that all future offsite emergency notifications will be done by EOF and **report** EOF operational to ED.

___ 11. **Ensure** the ERDS (NRC computer link) has been established within the 60-minute time requirement (TOC ERDS & press F1) (F3-26.3).

___ 12. **Ensure** appropriate NRC ENS Communications are conducted:

___ 12.1. **Verify** that Control Room (via the TSC Technical Communicator) has notified NRC of the event via the ENS phone (Per 10CFR50.72, NRC notifications are to be completed immediately after 15 minute state and local agency notifications and < 1 hour).

___ 12.2. **Notify** Control Room when TSC is ready to assume NRC ENS communications.

___ 12.3. **Use** PINGP 666 for future ENS notifications and updates as a guide.

___ 13. WHEN decision made to conduct an early release of plant personnel, THEN **assist** ED and Group Leaders in determining and releasing nonessential in accordance with F3-9.

___ 14. **Remind** ED to consider need for periodic TSC updates. (Use TSC Update Guide, PINGP 1395)

___ 15. WHEN ED determines the time of the next Facility Update, THEN **notify** the OSC Coordinator (x4424) and EOF Coordinator (x4500) of the next Facility Update time.

___ 16. **Direct** all reclassification announcements and periodic plant wide update announcements be made using PINGP 1106.

___ 17. **Direct** all TSC Group Leaders to review their support staff needs and direct their extra personnel to position themselves in the TSC lower level or return to their normal work area until further notice.

___ 18. **Determine** if additional TSC staffing (e.g., Engineering, REC area, command table, ERCS operation, and SEC support) is required and **request** SEC to make notifications if necessary. Consider FFD questioning if more staff are called out.

___ 19. **Coordinate** the establishment of the Employee Hot Line using PINGP 1106, if deemed necessary.

___ 20. WHEN ED directs establishment of long-term coverage, THEN **coordinate** the establishment of 24-hour coverage of all key emergency organization positions. **Include** FFD considerations related to fatigue, stress, illness, etc, using PINGP 1339.

___ 21. **Instruct** plant operations and engineering to review the "Operator Workarounds" list and current "Status 80 Work Orders" to evaluate current plant configuration considerations as it relates to the event and mitigating actions.

___ 22. AFTER a LOCA AND within 24 hours **direct** I&C calibrate the Containment H_2 Monitoring System. The manufacturer recommends calibration within 24 hours after a LOCA when containment pressure and temperature stabilize.

___ 23. IF plant is escalating the emergency classification, THEN **proceed** to the SITE AREA or GENERAL emergency section of this checklist.

ACTIVATION | ACTIVATION | ACTIVATION | ACTIVATION | ACTIVATION

Figure 5 PINGP 573

EXAMPLE ONLY USE CURRENT REVISION

PINGP 573, Rev. 48
Page 3 of 5

TECHNICAL SUPPORT CENTER COORDINATOR CHECKLIST

SITE AREA | SITE AREA | SITE AREA | SITE AREA | SITE AREA

Time of Classification _____

___ 1. **Direct** the following Plant Evacuation related activities:

- ___ 1.1. **Confirm** with Security Group Leader that TSC card readers are ready for reading ID cards.
- ___ 1.2. **Direct** all TSC personnel in lower and upper TSC insert their badges into the lower or upper (as appropriate) TSC card reader. This may be assigned to the Security Group Leader (or designee).
- ___ 1.3. **Post** magnetic chain "no entry" & "no exit" signs on lower TSC West door. (Signs are stored in TSC Supply Cabinet.)
- ___ 1.4. **Post** "All Personnel Exiting the TSC..." sign on the I&C Cage (stored in Ventilation Control Cabinet).

___ 2. AFTER personnel accountability is complete, THEN **ensure** the Control Room, OSC, Assembly Point, and EOF are informed of the results:

- ___ 2.1. **Direct** TSC Technical Communicator to inform Control Room of results.
- ___ 2.2. **Notify** OSC Coordinator (x4424) of results.
- ___ 2.3. **Notify** Assembly Pt. Coordinator (x 4292 N Warehouse, x5255 Rec. Warehouse) of results.

___ 3. IF EOF has NOT taken offsite communications, THEN **ensure** SEC has completed required notifications (PINGP 577).

___ 4. **Procure** copy of completed PINGP 577 from SEC for TSC ED to review.

___ 5. WHEN the EOF has been activated and taken offsite communication responsibilities, **ensure** the SEC knows that all future offsite emergency notifications will be done by EOF.

___ 6. IF radiological shine or release may affect TSC, THEN

- ___ 6.1. **Issue** pencil dosimetry (and TLDs if person does not have TLD) to all upper and lower TSC personnel per (F3-6 and PINGP 652).
- ___ 6.2. **Ensure** that issued dosimeters are less than 25% of full scale. (Re-Zero as necessary to approximately the first mark.)

___ 7. **Assist** non-plant representatives (e.g., NRC, Westinghouse, etc.) in TSC as necessary.

- ___ 7.1. May **use** PINGP 1297 for initial NRC Team briefing.
- ___ 7.2. **Utilize** Logistics Coordinator assistance as necessary.

___ 8. AFTER a LOCA AND within 24 hours **direct** I&C calibrate the Containment H_2 Monitoring System. The manufacturer recommends calibration within 24 hours after a LOCA when containment pressure and temperature stabilize.

___ 9. IF plant is escalating to a General Emergency, THEN **proceed** to the GENERAL emergency section of this checklist.

___ 10. IF plant is terminating the emergency, THEN **proceed** to the RECOVERY procedure, F3-30.

SITE AREA | SITE AREA | SITE AREA | SITE AREA | SITE AREA

Figure 5 PINGP 573

EXAMPLE ONLY USE CURRENT REVISION

PINGP 573, Rev. 48
Page 4 of 5

TECHNICAL SUPPORT CENTER COORDINATOR CHECKLIST

GENERAL | GENERAL | GENERAL | GENERAL | GENERAL

Time of Classification _____

___ 1. IF not already done, THEN **direct** the following Plant Evacuation related activities:

- ___ 1.1. **Confirm** with Security Group Leader that TSC card readers are ready for reading ID cards.
- ___ 1.2. **Direct** all TSC personnel in lower and upper TSC insert their badges into the lower or upper (as appropriate) TSC card reader. This may be assigned to the Security Group Leader (or designee).
- ___ 1.3. **Post** magnetic chain "no entry" & "no exit" signs on lower TSC West door. (Signs are stored in TSC Supply Cabinet.)
- ___ 1.4. **Post** "All Personnel Exiting the TSC..." sign on the I&C Cage (stored in Ventilation Control Cabinet).

___ 2. AFTER personnel accountability is complete, THEN **ensure** the Control Room, OSC, Assembly Point, and EOF are informed of the results:

- ___ 2.1. **Direct** TSC Technical Communicator to inform Control Room of results.
- ___ 2.2. **Notify** OSC Coordinator (x4424) of results.
- ___ 2.3. **Notify** Assembly Pt. Coordinator (x 4292 N Warehouse, x5255 Rec. Warehouse) of results.

___ 3. IF EOF has NOT taken offsite communications, THEN **ensure** SEC has completed required notifications (PINGP 577).

___ 4. **Procure** copy of completed PINGP 577 from SEC for TSC ED to review.

___ 5. WHEN the EOF has been activated and taken offsite communication responsibilities, **ensure** the SEC knows that all future offsite emergency notifications will be done by EOF.

___ 6. IF NOT already done, THEN **ensure** TSC dosimetry is issued in TSC.

- ___ 6.1. **Issue** pencil dosimetry (and TLDs if person does not have TLD) to all upper and lower TSC personnel per (F3-6 and PINGP 652).
- ___ 6.2. **Ensure** that issued dosimeters are less than 25% of full scale. (Re-Zero as necessary to approximately the first mark.)

___ 7. **Assist** non-plant representatives (e.g., NRC, Westinghouse, etc.) in TSC as necessary.

- ___ 7.1. May **use** PINGP 1297 for initial NRC Team briefing.
- ___ 7.2. **Utilize** Logistics Coordinator assistance as necessary.

___ 8. AFTER a LOCA AND within 24 hours **direct** I&C calibrate the Containment H_2 Monitoring System. The manufacturer recommends calibration within 24 hours after a LOCA when containment pressure and temperature stabilize.

___ 9. IF plant is terminating the emergency, THEN **proceed** to the RECOVERY procedure, F3-30.

GENERAL | GENERAL | GENERAL | GENERAL | GENERAL

Figure 5 PINGP 573

EXAMPLE ONLY USE CURRENT REVISION

PINGP 573, Rev. 48
Page 5 of 5

TECHNICAL SUPPORT CENTER COORDINATOR CHECKLIST

RELIEF TURNOVER	RELIEF TURNOVER	RELIEF TURNOVER	RELIEF TURNOVER	RELIEF TURNOVER

COMMENTS:

_____ **TSC Coordinator** _____ **Date/Time**

___ 1. IF turnover of TSC Coordinator responsibilities is required, THEN the on-coming TSC Coordinator should **perform** a thorough review of the sequence of events and conditions before turnover. They should **use** PINGP 573 as a guide.

___ 2. WHEN the off-going shift has been relieved, THEN **inform** the ED and **update** the TSC Personnel Status Board.

_____ **Relief TSC Coordinator** _____ **Date/Time**

RELIEF TURNOVER	RELIEF TURNOVER	RELIEF TURNOVER	RELIEF TURNOVER	RELIEF TURNOVER

Figure 6 PINGP 574

EXAMPLE ONLY USE CURRENT REVISION

PINGP 574, Rev. 28
Page 1 of 6
Document Type: Life of Plant
Retention: 7.36J

OPERATIONAL SUPPORT CENTER COORDINATOR CHECKLIST

ACTIVATION ACTIVATION ACTIVATION ACTIVATION ACTIVATION

___ 1. **Assign** an OSC Coordinator Assistant to perform several of the Activation Steps so you can keep the overall over sight of the OSC operation.

___ 2. **Setup** OSC sound system per job aid.

___ 3. **Verify** the green positions on the personnel board are staffed:

- OSC RP COORDINATOR (PINGP 1245 checklist)
  - RPS – RWP – Dosimetry
  - RPS – OSC MIDAS – CAM
  - RPS – Status – Comm.
- ELECTRICAL SUPV/TECH
- MECHANICAL SUPV.
- I&C SUPV/TECH

NOTE	The Emergency Work Status Board is used for tracking emergency work repair groups and operational work activities. See the posted job aid for guidance.

___ 4. **Designate** an individual (preferably from the Operations Support Pool) to update the OSC Emergency Work Status Board. (PINGP 1108)

___ 5. As more personnel arrive, **designate** individuals to perform the following:

- ___ 5.1. **Maintain** the OSC Status Board.
- ___ 5.2. **Maintain** the Emergency Center Narrative Log (PINGP 598) located in a 3-ring binder.
- ___ 5.3. **Control** the use of equipment located in the emergency lockers.
- ___ 5.4. **Post** the Enter and Exit signs on Control Room and OSC doors to control entrance and exit to OSC.
- ___ 5.5. **Obtain** portable radios from TSC for OSC use. Leave one radio in TSC for Field Team Communicator.

___ 6. **Direct** Operations Business Support Specialist (if available) to bring list of additional operators to the OSC Coordinator, to forward to Control Room.

___ 7. **Direct** the OSC Supervisors to verify telephones are plugged in, the ringer is on, and they have communication capability with their counterparts in TSC and or Control Room.

ACTIVATION ACTIVATION ACTIVATION ACTIVATION ACTIVATION

J:\TEMPLATE\0574 Operational Support Center Coordinator Checklist.dot

Figure 6 PINGP 574

EXAMPLE ONLY USE CURRENT REVISION

PINGP 574, Rev. 28
Page 2 of 6

OPERATIONAL SUPPORT CENTER COORDINATOR CHECKLIST

ACTIVATION ACTIVATION ACTIVATION ACTIVATION ACTIVATION

___ 8. AFTER Step 1-3 of this checklist have been completed, THEN **update** OSC personnel of plant status and declare OSC operational.

___ 8.1. **Before** you start your announcement:

- **Verify** the OSC wall clock is correct with ERCS clock with in one minute.
- **Put** on OSC Coordinator hat. • **Test** the microphone. • **Stand.** • **Direct** OSC Bell to be rung.

NOTE	The following is an example of the expectations announcement.

___ 8.2. Announcement:

"Attention to all OSC workers."

___ 8.3. **Wait** for all to be quiet and IF necessary, THEN **repeat** announcement.

"I am _____ and I am the OSC Coordinator.
(Given Name)

The OSC is Operational at this time.

The main function of the OSC is to control the flow of people into and out of the plant. It is critical that your name appear on the Available OSC Personnel Board and that you check in and out with the Work Status Board Keeper.

I want all to follow my expectations so we can have clear, concise integrated communications. My expectations are:

- All communications should follow the plant's communications standard using 3-way communication and the phonetic alphabet.
- All personnel **SHALL** stop your conversations and listen to plant page announcements and facility updates.
- All personnel who participate in updates should follow the Facility Update Guide and keep your report as brief as possible.
  - Communicate only that information that all should hear.
  - Do not repeat information from previous updates unless the issue has not been addressed or pertinent update information is available.
  - Let us keep facility updates to less than 8 minutes.
- All OSC workers synchronize your watches with the OSC wall clock now.

All personnel are to check in with Radiation Protection and Work Status Board before leaving the OSC.

The present situation is:

_____

_____

Does anyone have anything to add?

Our Current Priorities are: _____

_____

All personnel who are NOT assigned an OSC task please move to the OPS Lounge on the other side of the Control Room. I will notify you of the next update.

This is the end of the OSC update"

ACTIVATION ACTIVATION ACTIVATION ACTIVATION ACTIVATION

Figure 6 PINGP 574

EXAMPLE ONLY USE CURRENT REVISION

PINGP 574, Rev. 28
Page 3 of 6

OPERATIONAL SUPPORT CENTER COORDINATOR CHECKLIST

ACTIVATION ACTIVATION ACTIVATION ACTIVATION ACTIVATION

___ 9. **Notify** TSC (ED 4332 or TSC Coordinator 4461) that the OSC is operational

___ 10. **Notify** Control Room (4250 or 4251) that the OSC is operational.

NOTE
1) The REC SHALL be responsible for over all control and direction of the RPSs located in the OSC.
2) The Control Room SHALL be responsible for direction of the Operators located in the OSC

___ 11. **Remind** the Control Room that the Operators need to Check-in with Radiation Protection for current radiological information each time before going out.

___ 12. **Call** upon the OSC Operations Advisor for assistance. The Operations Advisor should use PINGP 1095, Ops Advisor Checklist.

___ 13. **Direct** Maintenance Supervisors to have sufficient staffing of the respective trades and to consider FFD questioning if more staff are called out.

___ 14. IF ED orders an Early Release, THEN **direct** supervisors to determine and report to their TSC counterpart the names of personnel that can be released from the site.

___ 15. IF intake of smoke OR airborne contamination from turbine deck is probable, THEN **direct** the shutdown of the OSC ventilation makeup and exhaust fans (controls operated on west wall).

___ 16. **Disallow** use of food in OSC until directed otherwise by Radiation Protection Group.

___ 17. WHEN requested by TSC to establish 24-hour coverage, THEN **complete** PINGP 1376, OSC 24 Hour Coverage Worksheet and **include** FFD considerations related to fatigue, stress, illness, etc.

___ 18. IF plant is terminating the emergency, THEN **follow** the direction of the ED on deactivation of the OSC.

___ 19. IF plant is escalating the emergency classification, THEN **proceed** to the SITE AREA or GENERAL Emergency section of this checklist.

ACTIVATION ACTIVATION ACTIVATION ACTIVATION ACTIVATION

Figure 6 PINGP 574

EXAMPLE ONLY USE CURRENT REVISION

PINGP 574, Rev. 28
Page 4 of 6

OPERATIONAL SUPPORT CENTER COORDINATOR CHECKLIST

SITE AREA SITE AREA SITE AREA SITE AREA SITE AREA

___ 1. WHEN a plant evacuation occurs, THEN **ensure** out plant teams are contacted to verify their well-being and activities for accountability purposes.

> **NOTE:** Security personnel will bring the personnel accountability list to the OSC for your verification of names.

___ 1.1. WHEN accountability list is received in the OSC, THEN **ensure** all out plant repair team members are accounted for. The Emergency Work Status Board may be used as a tool in this process.

___ 1.2. IF directed by the Emergency Director to conduct a manual accountability, THEN **use** PINGP 601 to list personnel names in OSC, Ops Lounge, Control Room and out plant personnel

___ 1.2.1. **Direct** list to be delivered to Security Manager or Designee in the TSC.

___ 2. IF intake of smoke OR airborne contamination from turbine deck is probable, THEN **direct** the **shutdown** of the OSC ventilation makeup and exhaust fans (controls operated on west wall).

___ 3. IF plant is terminating the emergency, THEN **follow** the direction of the ED on deactivation of the OSC.

___ 4. IF plant is escalating the emergency classification, THEN **proceed** to the GENERAL Emergency section of this checklist.

SITE AREA SITE AREA SITE AREA SITE AREA SITE AREA

Figure 6 PINGP 574

EXAMPLE ONLY USE CURRENT REVISION

PINGP 574, Rev. 28
Page 5 of 6

OPERATIONAL SUPPORT CENTER COORDINATOR CHECKLIST

GENERAL GENERAL GENERAL GENERAL GENERAL

___ 1. WHEN a plant evacuation occurs, THEN **ensure** out plant teams are contacted to verify their well-being and activities for accountability purposes.

> **NOTE:** Security personnel will bring the personnel accountability list to the OSC for your verification of names.

___ 1.1. WHEN accountability list is received in the OSC, THEN **ensure** all out plant repair team members are accounted for. The Emergency Work Status Board may be used as a tool in this process.

___ 1.2. IF directed by the Emergency Director to conduct a manual accountability, THEN **use** PINGP 601 to list personnel names in OSC, Ops Lounge, Control Room and out plant personnel

___ 1.2.1. **Direct** list to be delivered to Security Manager or Designee in the TSC.

___ 2. IF intake of smoke OR airborne contamination from turbine deck is probable, THEN **direct** the shutdown of the OSC ventilation makeup and exhaust fans (controls operated on west wall).

___ 3. IF plant is terminating the emergency, THEN **follow** the direction of the ED on deactivation of the OSC.

GENERAL GENERAL GENERAL GENERAL GENERAL

Figure 6 PINGP 574

EXAMPLE ONLY USE CURRENT REVISION

PINGP 574, Rev. 28
Page 6 of 6

OPERATIONAL SUPPORT CENTER COORDINATOR CHECKLIST

RELIEF TURNOVER RELIEF TURNOVER RELIEF TURNOVER RELIEF TURNOVER RELIEF TURNOVER

COMMENTS:

OSC Coordinator _____ Date/Time _____

___ 1. IF turnover of OSC Coordinator responsibilities are required, THEN the oncoming OSC Coordinator should perform a thorough review of the sequence of events and conditions before turnover. They should use PINGP 574 as a guide.

___ 2. Check with the following on turnover status.

- OSC RP COORDINATOR
- ELECTRICAL SUPERVISOR
- MECHANICAL SUPERVISOR
- I&C SUPERVISOR
- Ops Advisor (if available)

___ 3. WHEN turnover is complete, THEN **make** an OSC announcement **using** PINGP 1396.

___ 4. WHEN turnover completed, THEN **inform** the TSC (ED 4332 or TSC Coordinator 4461).

Relief OSC Coordinator _____ Date/Time _____

RELIEF TURNOVER RELIEF TURNOVER RELIEF TURNOVER RELIEF TURNOVER RELIEF TURNOVER

Figure 7 PINGP 911

EXAMPLE ONLY
USE CURRENT REVISION

PINGP 911, Rev. 6
Page 1 of 2
Retention: Life of Plant
Document Type: 7.36N

Assembly Point Coordinator Checklist

1. **Proceed** to the designated assembly area and **set up** the area as directed in F3-9. _____

NOTE	Ask for a RPS, NPSA, Labor or other person who has had experience using meters and frisking to assist in radiological monitoring and frisking.

2. **Ensure** radiological monitoring is established per F3-14.1. **Notify** REC (4350 or 4834) of any radiological problems.

   Name _____ _____

3. **Establish** communications with the REC (4350 or 4834). (Designate an Assembly Point Communicator if desired.)

   Name _____ _____

4. IF weather conditions that may be hazardous to health (i.e. extreme heat or cold) exist, THEN **recommend** to REC (4350 or 4834) to move Assembly Point to the EOF or release personnel. _____

5. **Designate** a responsible individual for the control of Emergency Locker Equipment.

   Name _____ _____

6. **Assist** the Emergency Director with the Personnel Accountability Check, as necessary, per F3-10. _____

7. **Determine** the need for personnel wholebody frisking. **Refer** to F3-19 for guidance.

   Frisking Monitor _____ _____

8. IF personnel OR vehicle deconning is necessary, THEN **call** REC and request a RPS. _____

9. **Coordinate** activities of all personnel located at the Assembly Point. _____

10. **Give** periodic updates to Assembly Point personnel as directed by the REC. _____

J:\TEMPLATE\0911 Assembly Point Coordinator Checklist.dot

Figure 7 PINGP 911

EXAMPLE ONLY
USE CURRENT REVISION

PINGP 911, Rev. 6
Page 2 of 2

11. **Provide** instructions to personnel when they are released from the Assembly Point for re-entry or transport offsite. _____

12. IF a large number of vehicles (>50) are being released from site, THEN **inform** the RPSS (ext. 4443) of this fact, so this information can be passed onto Goodhue County EOC. _____

13. IF contamination is highly likely AND personnel have been released, THEN **monitor** all vehicles departing from the site per F3-19. _____

14. **Ensure** all Emergency Locker Equipment returned to proper place when Assembly Point is no longer required per the REC. _____

_____ _____

Assembly Point Coordinator Date/Time

Figure 8 PINGP 1245

EXAMPLE ONLY USE CURRENT REVISION

PINGP 1245, Rev. 3
Page 1 of 1
Document Type: 7.36ZB
Retention: Life of Plant

OSC RADIATION PROTECTION COORDINATOR CHECKLIST

_____ (1) Notify OSC Coord when you have 4 RPS personnel present.

_____ (2) Verify R-65 operational or setup an OSC Area Monitor.(F3-7, Section 7.2) Periodically check readings.

_____ (3) Startup OSC/Control Room CAM. (F3-7, Section 7.2) Periodically verify proper operation of CAM.

_____ (4) Determine radiological aspects of plant emergency and update OSC Coordinator; as necessary. Communicate with REC in TSC frequently to assess radiological aspects of the plant emergency and necessary RP Group priorities.

(5) If radiological event:

_____ a. Issue dosimetry to OSC and Control Room personnel. (PINGP 652)

_____ b. Evaluate eating and drinking in the OSC/Control Room and make recommendations to OSC Coord. (F3-14.1)

_____ c. Establish radiological monitoring for OSC/Control Room and keep OSC Coord informed of habitability.

_____ d. Evaluate need to shutdown OSC ventilation fan and make recommendations to OSC Coord.

(6) Designate RPS to:

_____ a. Determine work groups inside Radiological Controlled Area and post on Work Status Board.

_____ b. Log into MIDAS to obtain Rad Monitor readings and monitor OSC CAM, every 15 minutes.

NAME _____

_____ (7) Designate RPS to setup RWP/Dosimetry issue desk. (F3-7, Section 7.3)

NAME _____

_____ (8) Designate person to communicate with Onsite survey teams and update Rad Status Board.

NAME _____

_____ (9) Direct RP Group personnel activities, as requested by REC. Keep REC informed of Radiological Surveys completed and those in progress. (F3-14.1)

(10) When a Plant Evacuation occurs:

_____ a. Designate RPS personnel to assist with radiological monitoring of personnel at Assembly Point. (F3-9)

NAME _____

NAME _____

_____ b. Contact Onsite survey teams and verify activities for Accountability purposes. Assist with Accountability as necessary. (F3-10)

_____ c. Establish contamination control for the OSC by setup of SOP and frisker station at OSC Entrance.

_____ (11) Participate in periodic OSC Emergency Center updates (use OSC Update Guide). (Should include a reminder to have RP Group included in Pre-Job Briefs.)

_____ _____
OSC RP Coordinator Date/Time

J:\TEMPLATE\1245 OSC Radiation Protection Group Leader Checklist.dot

Figure 9 PINGP 1237

EXAMPLE ONLY USE CURRENT REVISION

PINGP 1237, Rev. 0
Page 1 of 1
Document Type: 7.36ZC
Retention: Life of Plant

SAM EVALUATION TEAM LEADER CHECKLIST

NOTE:	**In most cases, the Severe Accident Management Evaluation Team Leader will be staffed by the General Superintendent Operations.**

_____ (1) Designate the following positions:

a. Diagnostics Flow Chart (DFC) Evaluator:

_____

b. Severe Challenge Status Tree (SCST) Evaluator:

_____

c. Other Evaluators, as necessary

_____

_____ (2) Direct Evaluators to use ERCS, TSC engineering and Tech Communicator to continuously access, trend and update the DFC and SCST.

_____ (3) If TSC was not functional prior to entering Severe Accident Management, inform the Control Room that the TSC is now functional and able to perform the functions of Severe Accident Management.

_____ (4) Conduct a briefing with the Shift Manager to obtain detailed information on plant conditions and what plant activities have been accomplished and what activities are in progress.

_____ (5) Announce to the TSC that the TSC has entered into Severe Accident Management activities.

_____ (6) Formulate severe accident strategies using the Severe Accident Guidelines, Severe Challenge Guidelines and Severe Accident Computational Aids.

_____ (7) Recommend for authorization the implementation of the Severe Accident Strategies to the SAM Group Decision Maker (Emergency Director).

_____ SAM EVALUATION TEAM LEADER/GSPO

_____ DATE/TIME

Figure 10 PINGP 1188

EXAMPLE ONLY USE CURRENT REVISION

PINGP 1188, Rev. 5
Page 1 of 1
Document Type: 7.36ZA
Retention: 2 Years

TSC LOGISTICS CHECKLIST

_____ 1. Report to the TSC Coordinator and assist as necessary.

_____ 2. Ensure a switchboard operator has staffed the TSC Switchboard in the Shift Emergency Communicator area.

_____ 3. Transport the Electrical Transition Files from the admin. building to the TSC Tech Resource Area (east end, 1st floor). (Complete within 1 hour of activation notification).

_____ 4. Assist in notifying "Early Release" of site employee groups as requested (F3-9).

_____ 5. Assist issuing TSC dosimetry to personnel in upper and lower TSC areas using PINGP 652 when requested. Ensure dosimeters <25% scale before issuing.

_____ 6. Provide administrative and document support services as necessary.

_____ 7. Arrange for food and beverage for the plant's emergency organization in Control Room, OSC and TSC.

a) DO NOT locate food in TSC engineering work area.

b) Lunches may be placed in I&C area if NO radioactive release is occurring or in First Floor TSC. Lunches should be distributed to TSC workers as directed by TSC Coordinator.

_____ 8. Assist with the receipt or escorting of the NRC Site Response Team members when they arrive.

a) Check with Radiological Emergency Coord. concerning a hazardous free entrance route.

b) We expect: 3 or 4 NRC in TSC, 1 in OSC and 1 (the resident inspector) in Control Room.

F3	ACTIVATION AND OPERATION OF TECHNICAL SUPPORT CENTER	NUMBER: F3-6
		REV: 16

REFERENCE USE

- ***Procedure segments may be performed from memory.***
- ***Use the procedure to verify segments are complete.***
- ***Mark off steps within segment before continuing.***
- ***Procedure should be available at the work location.***

O.C. REVIEW DATE:	OWNER:	EFFECTIVE DATE
3-4-02	M. Werner	4-15-02

1.0 PURPOSE

The purpose of this instruction is to describe the activation and monitoring requirements of the Technical Support Center.

2.0 APPLICABILITY

This instruction **SHALL** apply to all Shift Managers, Emergency Directors and all members of the TSC technical staff.

3.0 PRECAUTIONS

3.1 All unnecessary personnel **SHALL** be evacuated from the Technical Support Center when the Technical Support Center has been activated.

3.2 Monitoring of the Technical Support Center for direct radiation and airborne radioactive materials (particulate and iodine) **SHALL** be performed to ensure the habitability of the Technical Support Center.

3.3 Protective actions for individuals located in the Technical Support Center **SHALL** be taken at the prescribed levels of direct radiation or airborne radioactivity.

4.0 RESPONSIBILITIES

4.1 The TSC Coordinator is responsible to implement the actions directed in this procedure as necessary.

4.2 The Radiological Emergency Coordinator (REC) is responsible to provide oversight of the radiation monitoring of personnel and the TSC as necessary.

5.0 DISCUSSION

The first and second floor of the Old Administration Building Office Annex is designated as the onsite Technical Support Center (TSC). This area **SHALL** be used by plant management, technical and engineering groups, and NRC representatives as a center outside the main control room from which support for emergency operating conditions can be provided. The TSC **SHALL** be activated when an Alert, Site Area, or General Emergency is declared.

6.0 PREREQUISITES

An Alert, Site Area, or General Emergency has been declared.

7.0 PROCEDURE

7.1 Activation of TSC

7.1.1 Activation of the Technical Support Center **SHALL** occur whenever an Alert, Site Area or General Emergency is declared. Activation of the TSC may occur during normal work hours or during off normal work hours:

A. During normal work hours, the Technical Support Center **SHALL** be activated whenever an Alert, Site Area, or General Emergency is declared, as announced over the public address system. All members of the Operations Committee and other designated engineers and staff members **SHALL** report to the TSC.

B. If activation of the Technical Support Center occurs during off normal hours, the Emergency Director **SHALL** designate the Shift Emergency Communicator (SEC) to contact all Emergency Organization personnel, in accordance with F3-5.

7.1.2 All nonessential personnel **SHALL** evacuate the TSC area when the TSC has been activated.

7.1.3 Additional personnel should be notified and requested to report to the Technical Support Center as deemed necessary.

NOTE:	**Nonessential personnel from the OSC may position themselves in the TSC lower level due to high radiation dose rates or airborne contamination in the OSC.**

7.1.4 As the emergency proceeds from the initial phase, (the period immediately following the emergency initiation) into the recovery phase, all Protective Actions for radiological hazards in the Technical Support Center **SHALL** be consistent with the plant Radiation Protection Program.

7.1.5 The Technical Support Center **SHALL** remain activated until the emergency situation has been terminated or as otherwise directed by the Emergency Director.

7.1.6 The TSC Coordinator **SHALL** ensure proper activation and operation of the TSC by completing the duties listed on PINGP 573, TSC Coordinator Checklist.

7.2 Radiological Monitoring of TSC

NOTE:	**If airborne radioactivity is present in the TSC, manual dampers can be manipulated to route 100% of the upper level OR lower level return air through the filter unit per 7.3.4 of this procedure.**

7.2.1 **Monitor** radiation dose rates on the TSC Area Monitor, R-68.

7.2.2 If R-68 fails, or is not working, set up the AM-2 for monitoring:

A. **Obtain** the AM-2 from the TSC Locker.

B. **Plug** the AM-2 in.

C. **Verify** the green power light is on.

D. **Source check** the AM-2 with the button source in the TSC Locker and **verify** an upscale reading of meter.

E. If the AM-2 fails (power loss, incorrect reading, etc.), **contact** the Radiation Protection Group for additional radiation monitoring.

7.2.3 Establish operation of the TSC CAM

NOTE:	**The CAM, located in the Turbine Bldg. near the west entrance to the TSC, is in a hot standby condition with the electronics energized and the blower, chart, and filter paper off.**

A. **Turn** the blower switch to the ON position (located next to the recorder) to start the blower, strip chart recorder, and the filter paper drive.

B. **Adjust** the blower flow rate to 3 SCFM using the toggle switch located on the right side of the CAM.

C. **Verify** the CAM is in operation (i.e., verify the blower, filter, strip charts are operating; meters are on scale, etc.).

D. If the CAM fails to operate properly, **contact** the Radiation Protection Group for additional sampling.

7.2.4 Routinely **monitor** R-68 and/or VAMP (if set up) for direct radiation levels, and the CAM for airborne particulate and iodine activity.

7.2.5 **Take** the following Protective Actions based on readings from the R-68, AM-2 or CAM.

A. DIRECT RADIATION

1.	at about 15mR/hr	**consider** evacuating all nonessential personnel from the Tech Support Center
2.	at 1 R/hr	evacuation to the Control Room is recommended

NOTE:	**A 1 mrem/hr background will cause a CAM reading of about 20 cpm.**

B. CAM - Particulate

1.	$< 1 \times 10^{-9}$ µCi/cc	no protective action necessary
2.	$> 1 \times 10^{-9}$ but $< 1 \times 10^{-6}$ µCi/cc	**consider** use of respiratory protection and evacuation of all unnecessary personnel
3.	$> 1 \times 10^{-6}$ µCi/cc	evacuation to the Control Room is recommended

NOTE:	A 1 mrem/hr background will cause a CAM reading of about 100 cpm.

C. CAM - Iodine

1. If CAM alarms for iodine (5×10^{-9} µCi/cc), **establish** program of regular portable air samples by the Radiation Protection Group.

2. If portable air sample results > 1 DAC, **consider** evacuation of unnecessary personnel and limit exposures to less than 40 DAC - hours/week if possible.

3. If portable air sample results > 10 DAC, **consider** evacuation to the Control Room.

NOTE:	The Radiological Emergency Coordinator (REC) should recommend the use of potassium iodide pills (thyroid blocking agent) if the projected thyroid exposure approaches 25 REM CDE. See F3-18, Thyroid Iodine Blocking Agent (Potassium Iodide), for determining projected thyroid exposures.

7.3 TSC Ventilation System

NOTE:	**For information regarding TSC electrical supply, See Figure 2, TSC/WCC HVAC, Lighting and Receptacles Electrical Block Diagram.** **Following a loss of offsite power the TSC ventilation should be repowered as follows:** **BKR 422-60 TSC Clean up Unit Fan on MCC 2FA1 is repowered automatically via D4** **BKR 422-62 TSC Lower Level HVAC Unit on MCC 2FA1 is repowered automatically via D4** **BKR 263-8 TSC Upper Level HVAC Unit on MCC 2F2 is manually repowered** **via D3 using procedure C20.16 AOP1 which is invoked in procedure 1ES-0.1 or 2ES-0.1 to restore battery room cooling and TSC cooling following a loss of offsite power,** **<u>OR</u>** **via D4 using procedure C20.16 AOP2 which is invoked in procedure 1ES-0.1 or 2ES-0.1 to restore battery room cooling and TSC cooling following a loss of offsite power.**

NOTE:	**The upper and lower TSC HVAC supply air ducts are connected with a crossover duct and manual dampers, located on the roof of the TSC. By changing the normal position of the manual dampers, either HVAC unit can be used to supply either floor. See Appendix A for damper lineup using the crossover duct.**

7.3.1 System Startup

A. **CLOSE** or **ensure** the TSC doors are closed.

B. At the TSC Control Panel, **turn** ES-82601 from "NORMAL" to "EMERGENCY."

C. **Place** the Upper and Lower Level HVAC thermostat "AUTO-ON" fan switches in the "ON" position. (Thermostats located on north wall of upper level and south wall of lower level.)

D. **Check** the following indications at the TSC Control Panel (**refer** to Figure 1, TSC Clean-up System):

1. Filter Unit Trouble Light (Red light should be OFF).

NOTE:	**The TSC Return Fans should stop.**

2. The Clean Up Unit Fan (253-60) should start (Red "ON" Light should be lit).

3. Lower Level Outside Air Isolation Damper (MD-34602) should close (Green "CLOSE" light should be lit).

4. Upper Level Outside Air Isolation Damper (MD-34603) should close (Green "CLOSE" light should be lit).

5. Outside Air Volume Control Damper (MD-34604) should modulate open. (This damper modulates and will normally show mid position-both lights <u>may</u> or <u>may not</u> be lit).

6. Clean Up Unit Volume Control Damper (MD-34605) should modulate open. (This damper modulates and will normally show mid position-both lights <u>may</u> or <u>may not</u> be lit).

7. In the "EMERGENCY" mode, the TSC should be at a positive pressure greater than 0.125 inches W.G. as indicated by TSC Positive Pressure Gauge 82608.

E. **Place** the magnetic signs "TSC Vent System in Operation" on both sides of the 3 TSC Boundary doors (two on the West end and one on the East end).

7.3.2 Trouble Alarm

NOTE:	**The filter unit red trouble light will also be lit for a few seconds right after startup until the cleanup fan comes up to speed.**

A. The Filter Unit Red Trouble light will be lit if the following occurs:

1. TSC Cleanup Unit Fan Differential Pressure Lo (DPIS-82321).
2. Prefilter Differential Pressure Hi (DPIS-82331).
3. 1st HEPA Filter Differential Pressure Hi (DPIS-82332).
4. Charcoal Filter Differential Pressure Hi (DPIS-82333).
5. 2nd HEPA Filter Differential Pressure Hi (DPIS-82334).

B. If the above light should be lit, **investigate** the local dp filter indications. The filters may require changing.

7.3.3 System Shutdown

A. At the TSC Control Panel, **turn** ES-82601 from "EMERGENCY" to "NORMAL."

B. **CHECK** the following indications at the TSC Control Panel (refer to Figure 1, TSC Clean-up System):

1. Filter Unit Trouble Light (Red light should be OFF).

NOTE:	**The TSC Return Fans should start.**

2. The Clean Up Unit Fan (253-60) should stop (Green "OFF" light should be lit).
3. Lower Level Outside Air Isolation Damper (MD-34602) should open (Red "OPEN" light should be lit).

4. Upper Level Outside Air Isolation Damper (MD-34603) should open (Red "OPEN" light should be lit).

5. Outside Air Volume Control Damper (MD-34604) should close (Green "CLOSE" light should be lit).

6. Clean up Unit Volume Control Damper (MD-34605) should close (Green "CLOSE" light should be lit).

C. **Remove** the magnetic signs "TSC Vent System in Operation" from the TSC doors and **place** inside the TSC Control Panel.

D. **Place** the upper and lower level HVAC thermostat "AUTO-ON" fan switches in the "AUTO" position. (Thermostats located on the north wall of the upper level and south of the lower level.)

7.3.4 TSC Airborne Radioactivity Fast Clean Up

A. **Start** System per 7.3.1.

NOTE:	**Mark the normal position of each damper prior to changing position.**

B. **OPEN** the Lower Level PAC Filter Return Manual Damper (Damper B) (Reference Figure 1).

C. **CLOSE** the Upper Level PAC Filter Return Manual Damper (Damper D).

D. **CLOSE** the Lower Level Return Manual Damper (Damper A).

E. Partially **CLOSE** MD 34604 by changing the set point on FC 82103 to 10.

F. **Monitor** airborne levels in the Lower Level TSC until they are acceptable.

G. **OPEN** the Upper Level PAC Filter Return Manual Damper (Damper D).

H. **Return** the Lower Level Return Manual Damper to the Normal Position (Damper A).

I. **CLOSE** the Lower Level PAC Filter Return Manual Damper (Damper B)

J. **CLOSE** the Upper Level Return Manual Damper (Damper C).

K. **Monitor** Airborne Levels in the Upper Level TSC until they are acceptable.

L. **Return** the Upper Level Return Manual Damper (Damper C) to the Normal Position.

M. **Return** the Lower Level PAC Filter Return Manual Damper (Damper B) to the Normal position.

N. **Return** the Upper Level PAC Filter Return Manual Damper (Damper D) to the Normal position.

O. **Return** the setpoint on FC 82103 to 25.

7.4 Dosimetry Issue

NOTE:	**The purpose of issuing dosimetry to personnel in the TSC is to provide a record of exposures received while working in the TSC and exposures received while in transit to and from the emergency centers.**

7.4.1 If the event is a radiological event or has potential to be a radiological event, **issue** personnel dosimetry to each individual in the TSC and **log** initial dosimeter readings on PINGP 652, Emergency Center Activation Exposure Records.

7.4.2 As more personnel report to the TSC throughout the radiological event, **ensure** they are issued personnel dosimetry.

7.4.3 If a Secondary Access Control Point is set up for plant access, PINGP 652 should be forwarded to the Secondary Access Control Point for dosimetry logging when personnel leave the site at the end of their shift.

7.4.4 All entrances to the Aux Bldg **SHALL** be made via the OSC where each individual is advised of current radiological conditions in the Aux Bldg and issued additional dosimetry, as appropriate.

7.4.5 In those cases when an individual is going to an area where there exists high potential for the presence of radioactive contamination or radiation, the individual should go to the OSC first to be advised of current conditions and issued additional dosimetry, as appropriate.

7.5 Set up of TSC Frisking Station

7.5.1 **Place** portable frisker on shelf, located in hallway outside east TSC entrance door, and **plug** into AC outlet.

7.5.2 **Place** Step-Off-Pad on floor outside East TSC entrance door.

7.5.3 All personnel entering TSC should frisk hands and feet (at a minimum) and areas of concern for possible radiological contamination.

7.5.4 If no radiological contamination exists outside the normal radiological controlled areas, the TSC frisking station may be removed.

Figure 1

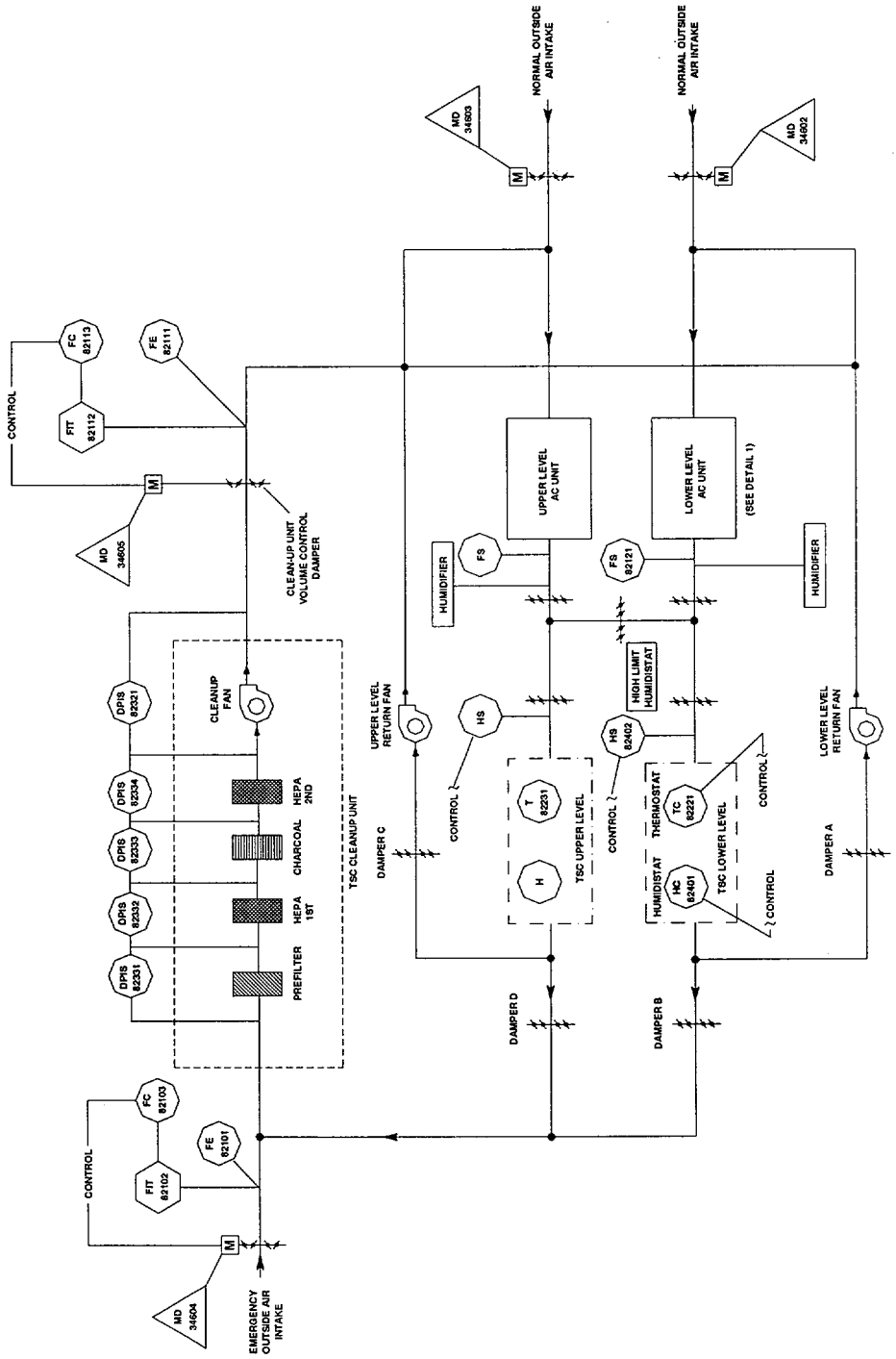
NORMAL OUTSIDE AIR INTAKE
NORMAL OUTSIDE AIR INTAKE
MD 34603
MD 34602
M
M
FC 82113
FE 82111
FIT 82112
CONTROL
M
MD 34605
CLEAN-UP UNIT VOLUME CONTROL DAMPER
UPPER LEVEL AC UNIT
LOWER LEVEL AC UNIT
(SEE DETAIL 1)
HUMIDIFIER
FS
FS 82121
HUMIDIFIER
HIGH LIMIT HUMIDISTAT
DPIS 82321
DPIS 82334
DPIS 82333
DPIS 82332
DPIS 82331
CLEANUP FAN
HEPA 2ND
CHARCOAL
HEPA 1ST
PREFILTER
TSC CLEANUP UNIT
UPPER LEVEL RETURN FAN
HS
CONTROL
DAMPER C
T 82231
H
TSC UPPER LEVEL
CONTROL
HS 82402
HUMIDISTAT
THERMOSTAT
TC 82221
HC 82401
TSC LOWER LEVEL
CONTROL
CONTROL
LOWER LEVEL RETURN FAN
DAMPER A
DAMPER D
DAMPER B
FC 82103
FE 82101
FIT 82102
CONTROL
M
MD 34604
EMERGENCY OUTSIDE AIR INTAKE

Figure 2

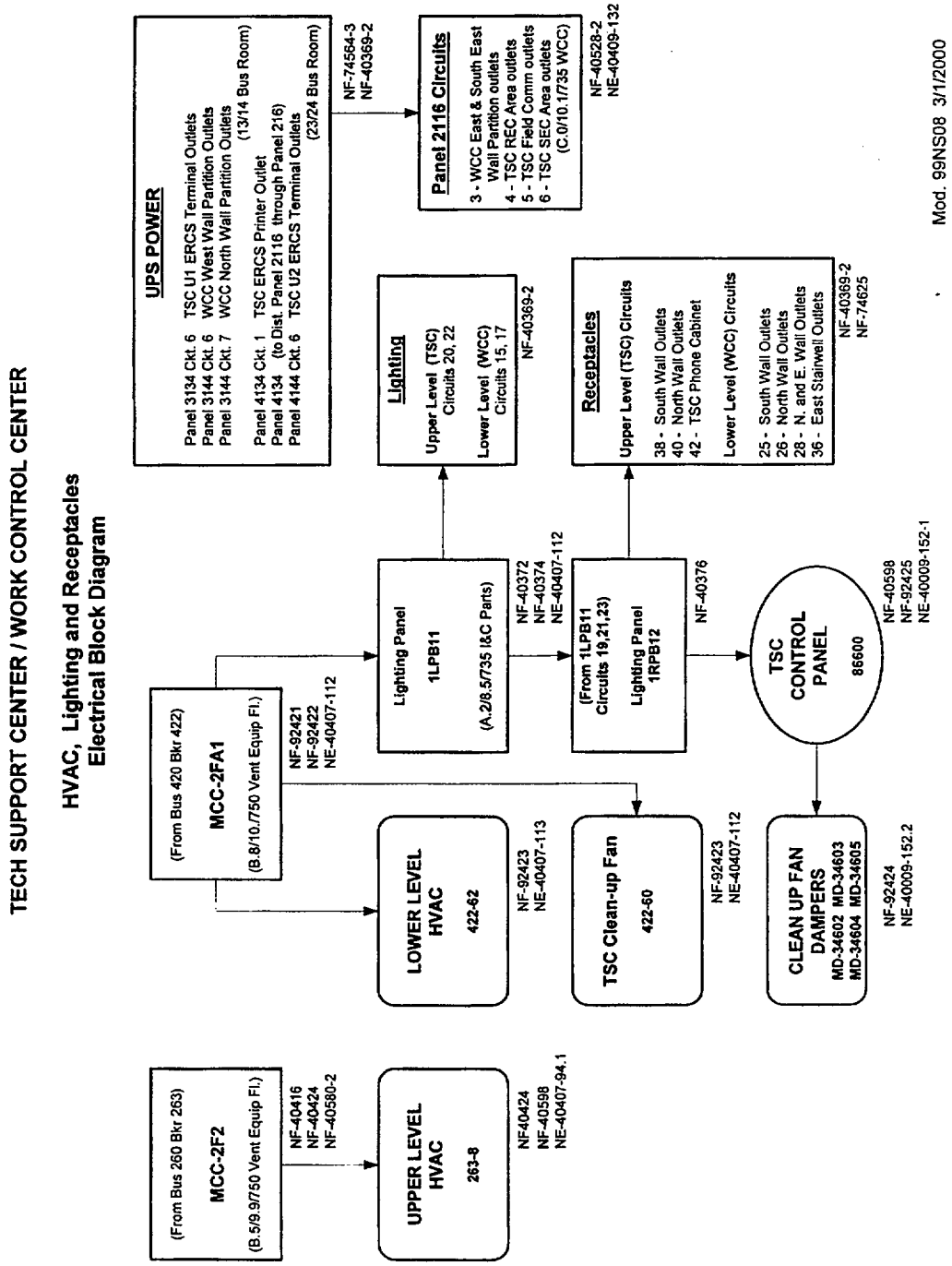
TECH SUPPORT CENTER / WORK CONTROL CENTER
HVAC, Lighting and Receptacles
Electrical Block Diagram
UPS POWER
Panel 3134 Ckt. 6 TSC U1 ERCS Terminal Outlets
Panel 3144 Ckt. 6 WCC West Wall Partition Outlets
Panel 3144 Ckt. 7 WCC North Wall Partition Outlets (13/14 Bus Room)
Panel 4134 Ckt. 1 TSC ERCS Printer Outlet
Panel 4134 (to Dist. Panel 2116 through Panel 216)
Panel 4144 Ckt. 6 TSC U2 ERCS Terminal Outlets (23/24 Bus Room)
NF-74564-3
NF-40369-2
Panel 2116 Circuits
3 - WCC East & South East Wall Partition outlets
4 - TSC REC Area outlets
5 - TSC Field Comm outlets
6 - TSC SEC Area outlets (C.0/10.1/735 WCC)
NF-40528-2
NE-40409-132
Lighting
Upper Level (TSC) Circuits 20, 22
Lower Level (WCC) Circuits 15, 17
NF-40369-2
Receptacles
Upper Level (TSC) Circuits
38 - South Wall Outlets
40 - North Wall Outlets
42 - TSC Phone Cabinet
Lower Level (WCC) Circuits
25 - South Wall Outlets
26 - North Wall Outlets
28 - N. and E. Wall Outlets
36 - East Stairwell Outlets
NF-40369-2
NF-74625
(From Bus 420 Bkr 422)
MCC-2FA1
(B.8/10./750 Vent Equip Fl.)
NF-92421
NF-92422
NE-40407-112
Lighting Panel
1LPB11
(A.2/8.5/735 I&C Parts)
NF-40372
NF-40374
NE-40407-112
(From 1LPB11 Circuits 19,21,23)
Lighting Panel
1RPB12
NF-40376
TSC CONTROL PANEL
86600
NF-40598
NF-92425
NE-40009-152-1
LOWER LEVEL HVAC
422-62
NF-92423
NE-40407-113
TSC Clean-up Fan
422-60
NF-92423
NE-40407-112
CLEAN UP FAN DAMPERS
MD-34602 MD-34603
MD-34604 MD-34605
NF-92424
NE-40009-152.2
(From Bus 260 Bkr 263)
MCC-2F2
(B.5/9.9/750 Vent Equip Fl.)
NF-40416
NF-40424
NF-40580-2
UPPER LEVEL HVAC
263-8
NF40424
NF-40598
NE-40407-94.1
Mod. 99NS08 3/1/2000

Appendix A

The upper and lower TSC HVAC supply air ducts are connected with a crossover duct and manual dampers, located on the roof of the TSC. The crossover damper is normally closed. By changing the normal position of the manual dampers, either HVAC unit can be used to supply either floor.

1. Manual damper lineup for normal operations:

   TSC UPPER LVL SUPPLY UPSTRM DAMPER - **OPEN**

   TSC UPPER LVL SUPPLY DWNSTRM DAMPER - **OPEN**

   TSC X-OVER DAMPER - **CLOSED**

   TSC LOWER LVL SUPPLY UPSTRM DAMPER - **OPEN**

   TSC LOWER LVL SUPPLY DWNSTRM DAMPER - **OPEN**

2. Manual damper lineup for UPPER LVL HVAC Unit OUT OF SERVICE, LOWER LVL HVAC Unit supplying air to upper level:

   TSC UPPER LVL SUPPLY UPSTRM DAMPER - **CLOSED**

   TSC UPPER LVL SUPPLY DWNSTRM DAMPER - **OPEN**

   TSC X-OVER DAMPER - **OPEN**

   TSC LOWER LVL SUPPLY UPSTRM DAMPER - **OPEN**

   TSC LOWER LVL SUPPLY DWNSTRM DAMPER - **CLOSED** to force all air to upper level as desired OR **ADJUST** to provide air to both levels.

Appendix A

NOTE:	The TSC CAM sample tube is located in the TSC LOWER LVL HVAC return air duct. If the TSC LOWER LVL HVAC unit is out of service, use grab samples to monitor TSC air quality.

3. Manual damper lineup for LOWER LVL HVAC Unit OUT OF SERVICE, UPPER LVL HVAC Unit supplying air to lower level:

   TSC UPPER LVL SUPPLY UPSTRM DAMPER – **OPEN**

   TSC UPPER LVL SUPPLY DWNSTRM DAMPER - **CLOSED** to force all air to lower level as desired OR **ADJUST** to provide air to both levels.

   TSC X-OVER DAMPER – **OPEN**

   TSC LOWER LVL SUPPLY UPSTRM DAMPER – **CLOSED**

   TSC LOWER LVL SUPPLY DWNSTRM DAMPER – **OPEN**

F3	CORE DAMAGE ASSESSMENT	NUMBER: F3-17
		REV: 9

REFERENCE USE
• *Procedure segments may be performed from memory.*
• *Use the procedure to verify segments are complete.*
• *Mark off steps within segment before continuing.*
• *Procedure should be available at the work location.*

O.C. REVIEW DATE:	OWNER:	EFFECTIVE DATE
2-20-02 SS	M. Werner	4-15-02

1.0 PURPOSE

The purpose of this procedure is to provide a means to best estimate the degree of reactor core damage from the measured fission product concentrations in water and gas samples taken for the primary system and containment under accident conditions.

2.0 APPLICABILITY

This procedure **SHALL** apply to the Nuclear Engineering Staff.

3.0 PRECAUTIONS

3.1 The numbers obtained using this procedure are at best, estimates only.

3.2 When making core damage calculations as per this procedure, considerations should be given to other plant indicators, for example:

3.2.1 Incore Thermocouples.

3.2.2 Reactor Coolant Loop Radiation Monitors (R70/71).

3.2.3 Containment Radiation Monitors (R48/49).

3.2.4 Hydrogen Concentration in the Containment Atmosphere

3.3 Spiking may occur after a shutdown or significant power change, usually during the 2 to 6 hour period following the power change. Iodine spiking is a characteristic of the condition where an increase in the normal primary coolant activity is noted, but no damage to the cladding has occurred.

4.0 RESPONSIBILITIES

The Nuclear Engineering Group is responsible to estimate the degree of reactor core damage according to the guidance provided in this procedure.

5.0 DISCUSSION

The approach utilized in this methodology of core damage assessment is measurement of fission product concentrations in the primary coolant system, and containment, when applicable, utilizing the post accident sampling system.

Certain nuclides have been selected to be associated with each particular core damage state, i.e., clad damage, fuel overheat and fuel melt. These nuclides reach equilibrium quickly within the fuel cycle. Once equilibrium condition are reached, a fixed inventory of the nuclides is assumed to exist within the fuel pellet. For these nuclides which reach equilibrium, their relative ratios within the fuel pellet can also be considered to be constant. During operation, certain volatile fission products collect in the gap. The relative ratios in the gap can also be considered to be constant, however, the distribution of the nuclides in the gap is not in the same proportion as the fuel pellet inventory since the migration of each nuclide into the gap is dependent on its particular diffusion rate. The relative ratios of the nuclides analyzed during an accident may be compared to the predicted relative ratios existing in the gap and fuel pellet to determine the source of the fission product release, i.e., gap release or fuel pellet.

Clad damage is characterized by the release of these fission products, i.e., isotopes of the noble gases, iodine, and cesium which have accumulated in the gap and during the operation of the plant. When the cladding ruptures, it is assumed that the fission product gap inventory of the damaged fuel rods is instantaneously released to the primary system. For this methodology it is assumed that the noble gases will escape through the break of the primary system boundary to the containment atmosphere and the iodines will stay in solution and travel with primary system water during the accident.

Fission product release associated with overtemperature fuel conditions arises initially from the portion of the noble gas, cesium and iodine inventories that was previously accumulated in grain boundaries. In addition, small amounts of the more refractory elements, barium-lanthanum, and strontium are also released.

Fuel pellet melting leads to rapid release of many noble gases, halides, and cesiums remaining in the fuel after overheat conditions. Significant release of the strontium, barium-lanthanum chemical groups is perhaps the most distinguishing feature of melt release conditions.

Auxiliary indicators such as core exit thermocouples, reactor vessel water level, reactor coolant loop radiation monitors, containment radiation monitors, and the containment hydrogen concentration are available for estimating core damage. These indications should confirm the core damage estimates which in turn are based on the radionuclide analysis.

6.0 PREREQUISITES

An emergency of an Alert, Site Alert, or General Emergency has been declared.

7.0 PROCEDURE

NOTE:	**The program B80DAMASS may be used whenever core damage estimates are desired.**

7.1 Request the Radiation Protection Group to obtain the applicable samples to enable an adequate assessment of core damage. See Table 1 for suggested sampling locations.

7.2 Obtain the following plant data at the approximate sample time:

7.2.1 Incore Thermocouple Map

7.2.2 Containment Pressure

7.2.3 Containment Temperature

7.2.4 Containment Hydrogen Concentration

7.2.5 Containment Radiation Level

7.2.6 Containment Sump Level

7.2.7 RVLIS Level

7.3 Perform B80DAMASS according to the instructions in SWI-NE-5 (23) to obtain core damage estimates. Continue with Step 7.15 of this procedure when the B80DAMASS run is complete.

NOTE:	If the computer is not available, perform the following manual calculations to obtain core damage estimates.

7.4 Decay correct the specific activities determined by the sample analysis, back to the time of reactor shutdown, as follows:

NOTE:	The decay correction may have been accomplished by the computer during the spectrum analysis. Therefore, this step may not need to be completed.

$$A_0 = \frac{A}{e^{-\lambda_i t}}$$

Where:

A = measured specific activity, µCi/gm or µCi/cc

λ_i = decay constant of isotope i, sec^{-1}

t = time elapsed from reactor shutdown to time of sampling, sec.

A_0 = decay corrected specific activity µCi/gm or µCi/cc

7.5 If a parent-daughter relationship exists for a specific isotope, the following steps should be followed to calculate the fraction of the measured activity due to the decay of the daughter that was released and then to calculate the activity of the daughter released at shutdown.

7.5.1 Calculate the hypothetical daughter concentration (Q_B) at the time of the sample analysis assuming 100 percent release of the parent and daughter source inventory:

$$Q_B(t) = K_i \frac{\lambda_B}{\lambda_B - \lambda_{Ai}} Q^o_{Ai}\left(e^{-\lambda_{Ai}t} - e^{-\lambda_B t}\right) + Q^0_B\, e^{-\lambda_B t}$$

Where:

Q^0_{Ai} = 100% source inventory (Ci) of parent i, Table 2 or Table 4.

Q^0_B = 100% source inventory (Ci) of daughter, Table 2 or Table 4.

$Q_B(t)$ = hypothetical daughter activity (Ci) at sample time.

K_i = if parent has 2 daughters, K_i is the branching factor, Table 3.

λ_{Ai} = decay constant of parent i, sec^{-1}

λ_B = daughter decay constant, sec^{-1}

t = time period from shutdown to time sample, sec.

7.5.2 Determine the contribution of only the decay of the initial inventory of the daughter to the hypothetical daughter activity at sample time:

$$Fr = \frac{Q^0_B e^{-\lambda_B t}}{Q_B (t)}$$

7.5.3 Calculate the amount of decay corrected sample specific activity associated with just the daughter that was released.

$$M^0_B = Fr \times A_0$$

Where: A_0 = decay corrected specific activity (μCi/gm or μCi/cc) as determined by the analysis.

7.6 Determine the total volume or mass of the medium which was sampled.

7.6.1 Containment Volume:

V = containment free volume (cc's)

= 3.74×10^{10} cc's

7.6.2 Liquid Mass:

A. Liquid temperature < 200°F

$$\text{Mass (gms)} = \text{volume (ft3)} \times \rho_{STP} \times \frac{28.3 \times 10^3 cc}{ft^3}$$

Where: ρ_{STP} = water density at STP = 1.0 gm/cc

B. Liquid temperature > 200°F

$$\text{Mass (gms)} = \text{volume (ft}^3) \times \frac{\rho}{\rho_{STP}} (2) \times \rho_{STP} \times \frac{28.3 \times 10^3 cc}{ft^3}$$

Where: $\frac{\rho}{\rho_{STP}} (2)$ = water density ratio at medium temperature, from Figure 1

ρ_{STP} = water density at STP = 1.0 gm/cc

7.7 Determine the total activity of each isotope in each medium.

7.7.1 Containment Atmosphere:

Total containment Activity (curies) = A_0 (μCi/cc) X V (cc's) X $\frac{\text{Curie}}{1 \times 10^6 \mu\text{Ci}}$

Where: A_0 = Specific activity of containment atmosphere (μCi/cc), decay corrected to time of reactor shutdown and temperature/pressure corrected.

V = containment free volume (cc's)

= 3.74×10^{10} cc's

7.7.2 Liquid Sample:

Total Liquid Activity (Curies) = Liquid MASS (gms) x A_0 (μCi/cc) x $\frac{\text{Curie}}{1 \times 10^6 \mu\text{Ci}}$

Where: A_0 = Specific activity of liquid sample (μCi/gm), decay corrected to time of reactor shutdown.

7.8 The approximate total activity of each isotope in the liquid samples can now be calculated.

Total Water Activity = RCS Activity + Sump Activity + Activity Leaked to Secondary System.

7.9 Now the total activity of each isotope released at the time of the accident can be determined:

Total Activity Released = Total Water Activity + Containment Atmosphere Activity

7.10 Utilizing the total activity of each isotope released, calculate the activity ratios of the released fission products.

7.10.1 Noble Gas Ratio $= \dfrac{\text{Noble Gas Activity}}{\text{Xe}-133\text{ Activity}}$

7.10.2 Iodine Ratio $= \dfrac{\text{Iodine Activity}}{\text{I-131 Activity}}$

NOTE:	**Steady state power conditions may be assumed where power does not vary by more than ± 10% of rated power level from time averaged value.**

7.11 Determine the power history prior to reactor shutdown.

7.12 Using the power history, determine a power correction factor for each isotope, in accordance with the following guidelines:

NOTE:	**Steady state power condition is assumed where the power does not vary by more than ± 10% of rated power level from time averaged value.**

7.12.1 Steady State power prior to shutdown.

A. Half-life of nuclide < 1 day

$$\text{Power Correction Factor} = \frac{\text{Average Power Level (Mwt) for Prior 4 Days}}{\text{Rated Power Level (Mwt)}}$$

B. Half-life of nuclide > 1 day

$$\text{Power Correction Factor} = \frac{\text{Average Power Level (Mwt) for Prior 30 Days}}{\text{Rated Power Level (Mwt)}}$$

C. Half-life of nuclide ~ 1 year

$$\text{Power Correction Factor} = \frac{\text{Average Power Level (Mwt) for Prior 1 year}}{\text{Rated Power Level (Mwt)}}$$

7.12.2 Transient power history in which the power has not remained constant prior to reactor shutdown.

NOTE:	**For the majority of the selected nuclides, the 30-day power history prior to shutdown is sufficient to calculate a power correction factor.**

A. Power Correction Factor $= \dfrac{\Sigma_j P_j \left(1 - e^{-\lambda_i t_j}\right) e^{-\lambda_i t^0_j}}{RP}$

P_j = average power level (Mwt) during operating period t_j

RP = rated power level of the core (Mwt)

t_j = operating period in days at power P_j where power does not vary more than ±10 percent power of rated power level from time averaged value (P_j).

λ_i = decay constant of nuclide i in inverse days.

t^0_j = time between end of period j and time of reactor shutdown in days.

B. For the few nuclides with half-lives around one year or longer, a power correction factor which ratios effective full power days to total calendar days of cycle operation is applied.

$$\text{Power Correction Factor} = \frac{\text{Actual Operating EFPD of equilibrium cycle}}{\text{Total expected EFPD of equilibrium cycle operation}}$$

Where: Equilibrium Cycle = three (3) cycles of core operation (approximately 1050 EFPD)

7.12.3 For Cs-134, Figure 2 is used to determine the power correction factor. To use Figure 2, the average power during the entire operating period is required.

7.13 The total inventory of fission products available for release at reactor shutdown are calculated by applying the power correction factors to the equilibrium, end-of-life core inventories.

$$\text{Corrected Inventory} = \text{Equilibrium Inventory at end-of-life (Ci) (Table 2)} \times \text{Power Correction Factor}$$

7.14 Determine the percentage of inventory released, for each isotope.

$$\text{Release Percentage (\%)} = \frac{\text{Total Activity Released (Ci)}}{\text{Corrected Inventory (Ci)}} \times 100$$

7.15 The results of radionuclide analysis may now be used to determine an estimate of the extent of core damage.

7.15.1 From Figure 3 thru 15, estimate the extent of core damage by categorizing the percentage of clad damage, fuel over-temperature, and fuel melt.

7.15.2 Compare the calculated activity ratios with those listed in Table 5. Measured relative ratios greater than the gap activity ratios listed in Table 5 are indicative of more severe failures, e.g., fuel overheat.

7.16 To verify the conclusion of the radionuclide analysis, other indicators should now be used to provide verification of the estimate of core damage.

7.16.1 Containment Hydrogen Concentration:

A. Obtain the containment hydrogen concentration (%).

NOTE:	**Within the accuracy of this methodology, it is assumed that recombiners will have an insignificant effect on the hydrogen concentration when it is indicated that extensive zirconium-steam reaction could have occurred.**

B. From Figure 16, determine the percentage (%) zirconium water reaction.

C. Table 6 can be used to validate the extent of core damage estimate.

7.16.2 Core Exit thermocouple Readings:

A. Obtain as many core exit thermocouple readings as possible for evaluation of core temperature conditions.

NOTE:	**If a thermocouple reads greater than 1650°F or is reading considerably different than neighboring thermocouples, thermocouple failure should be considered.**

B. Compare the thermocouple readings with those in Table 7 to confirm the core damage estimate.

NOTE:	**Radiation Monitors in containment may experience errors during first 4 hours after a DBA LOCA due to thermally induced errors. See Attachment 1 for more information.**

7.16.3 Containment Radiation Monitor:

A. Obtain the containment dome monitor readings, R/Hr, from R-48 and/ or R-49.

B. From Figure 17, verify core damage estimate. The exposure rate in Figure 17 is based on the release of only noble gases to the containment. Halogens and other fission products were not considered to be significant contributors to the containment monitor reading.

7.16.4 Reactor Coolant Loop Radiation Monitor:

A. Obtain the reactor coolant loop radiation monitor readings, R/Hr, from R-70 and/or R-71.

B. From Figure 18, determine estimated core damage.

7.17 All indicators should confirm any core damage estimates. If radio-nuclide analysis and auxiliary indicators do not agree on core damage estimates, then recheck of indications may be performed, or certain indicators may be discounted, based on engineering judgment.

Table 1 Suggested Sampling Locations

Scenario	Principal Sampling Locations	Other Sampling Locations
Small Break LOCA		
Reactor Power > 1%*	RCS Hot Leg, Containment Atmosphere	
Reactor Power < 1%*	RCS Hot Leg**	
Large Break LOCA		
Reactor Power > 1%*	Containment Sump, Containment Atmosphere, RCS Hot Leg	
Reactor Power < 1%*	Containment Sump, Containment Atmosphere	
Steam Line Break	RCS Hot Leg,	Containment Atmosphere
Steam Generator Tube Rupture	RCS Hot Leg, Secondary System	
Indication of Significant Containment Sump Inventory	Containment Sump, Containment Atmosphere	
Containment Building Radiation Monitor Alarm	Containment Atmosphere, Containment Sump	
Safety Injection Actuated	RCS Hot Leg	
Indication of High Radiation Level in RCS	RCS Hot Leg	

* Assume operating at that level for some appreciable time.

** If a RCS hot leg sample is unavailable and the RHR system is operating, obtain a RHR system sample. However, for a RHR system sample to be a good representation of the RCS, the primary water should be circulating through the system.

Table 2 Fuel Pellet Inventory

Fuel Pellet Inventory*

Nuclide	Half Life	Inventory Curies**
Kr 85m	4.4	1.0×10^7
Kr 87	76 m	1.85×10^7
Kr 88	2.8 h	2.69×10^7
Xe 131m	11.8 d	2.94×10^5
Xe 133	5.27 d	9.26×10^7
Xe 133m	2.26 d	1.35×10^7
Xe 135	9.14 h	1.77×10^7
I 131	8.05 d	4.54×10^7
I 132	2.26 h	6.65×10^7
I 133	20.3 h	9.26×10^7
I 135	6.68 h	8.33×10^7
Rb 88	17.8 m	2.69×10^7
Cs 134	2 yr	1.09×10^7
Cs 137	30 yr	4.96×10^6
Te 129	68.7 m	1.51×10^7
Te 132	77.7 h	6.65×10^7
Sr 89	52.7 d	3.70×10^7
Sr 90	28 yr	3.36×10^6
Ba 140	12.8 d	7.91×10^7
La 140	40.22 h	8.33×10^7
La 142	92.5 m	7.07×10^7
Pr 144	17.27 m	5.81×10^7

* Inventory based on ORIGEN run for equilibrium, end-of-life core.
** Westinghouse, 2-Loop, 1650 Mwt Plant

Table 3 Parent-Daughter Relationships

Parent	Parent Half-Life*	Daughter	Daughter Half-Life*	K**
Kr-88	2.8 h	Rb-88	17.8 m	1.00
I-131	8.05 d	Xe-131m	11.8 d	.008
I-133	20.3 h	Xe-133m	2.26 d	.024
I-133	20.3 h	Xe-133	5.27 d	.976
Xe-133m	2.26 d	Xe-133	5.27 d	1.00
I-135	6.68 h	Xe-135	9.14 h	.70
Xe-135m	15.6 m	Xe-135	9.14 h	1.00
I-135	6.68 h	Xe-135m	15.6 m	.30
Te-132	77.7 h	I-132	2.26 h	1.00
Sb-129	4.3 h	Te-129	68.7 m	.827
Te-129m	34.1 d	Te-129	68.7 m	.680
Sb-129	4.3 h	Te-129m	34.1 d	.173
Ba-140	12.8 d	La-140	40.22 h	1.00
Ba-142	11 m	La-142	92.5 m	1.00
Ce-144	284 d	Pr-144	17.27 m	1.00

* Table of Isotopes, Lederer, Hollander, and Perlman, Sixth Edition

** Branching decay factor

Table 4 Source Inventory of Related Parent Nuclides

Nuclide	Half-Life	Inventory, Curies
Xe-135m	15.6 m	1.97×10^7
Sb-129	4.3 h	1.49×10^7
Te-129m	34.1 d	3.74×10^6
Ba-142	11 m	7.65×10^7
Ce-144	284 d	4.83×10^7

Table 5 Isotopic Activity Ratios of Fuel Pellet and Gap

Isotopic Activity Ratios of Fuel Pellet and Gap*

Nuclide	Fuel Pellet Activity Ratio	Gap Activity Ratio
Kr-85m	0.11	0.022
Kr-87	0.22	0.022
Kr-88	0.29	0.045
Xe-131m	0.004	0.004
Xe-133	1.0	1.0
Xe-133m	0.14	0.096
Xe-135	0.19	0.051
I-131	1.0	1.0
I-132	1.5	0.17
I-133	2.1	0.71
I-135	1.9	0.39

$$\text{Noble Gas Ratio} = \frac{\text{Noble Gas Isotope Inventory}}{\text{Xe-133 Inventory}}$$

$$\text{Iodine Ratio} = \frac{\text{Iodine Isotope Inventory}}{\text{I-131 Inventory}}$$

* The measured ratios of various nuclides found in reactor coolant during normal operation is a function of the amount of "tramp" uranium on fuel rod cladding, the number and size of "defects" (i.e., "pin holes"), and the location of the fuel rods containing the defects in the core. The ratios derived in this report are based on calculated values of relative concentrations in the fuel or in the gap. The use of these present ratios for post accident damage assessment is restricted to an attempt to differentiate between fuel overtemperature conditions and fuel cladding failure conditions. Thus the ratios derived here are not related to fuel defect levels incurred during normal operation.

Table 6 Characteristics of Categories of Fuel Damage

Core Damage Category	Percent and Type of Fission Products Released	Fission Product Ratio***	Containment Radiogas Monitor R/hr 10 hrs after shutdown**	Core Exit Thermocouples Readings (Deg F)	Core Uncovery Indication	Hydrogen Monitor (Vol % H_2)
No clad damage	KR-87 < 1 x 10^{-3} Xe-133 < 1 x 10^{-3} I-131 < 1 x 10^{-3} I-133 < 1 x 10^{-3}	Not Applicable	--	< 750	No uncovery	Negligible
0-50% clad damage	Kr-87 10^{-3} - 0.01 Xe-133 10^{-3} - 0.1 I-131 10^{-3} - 0.3 I-133 10^{-3} - 0.1	Kr-87 = 0.022 I-133 = 0.71	0 - 50	750 - 1300	Core uncovery	0 - 6
50-100% clad damage	Kr-87 0.01 - 0.02 Xe-133 0.1 - 0.2 I-131 0.3 - 0.5 I-133 0.1 - 0.2	Kr-87 = 0.022 I-133 = 0.71	50 to 100	1300 - 1650	Core uncovery	6 - 13
0-50% fuel pellet overtemperature	Xe-Kr, Cs, I 1 - 20 Sr-Ba 0 - 0.1	Kr-87 = 0.22 I-133 = 2.1	100 to 1.15E4	> 1650	Core uncovery	6 - 13
50-100% fuel pellet overtemperature	Xe-Kr, Cs, I 20 - 40 Sr-Ba 0.1 - 0.2	Kr-87 = 0.22 I-133 = 2.1	1.15E4 to 2.3E4	> 1650	Core uncovery	6 - 13
0-50% fuel melt	Xe, Kr, Cs, I 40-70 Sr-Ba 0.2 - 0.8 Pr 0.1 - 0.8	Kr-87 = 0.22 I-133 = 2.1	2.3E4 to 2.7E4	> 1650	Core uncovery	6 - 13
50-100% fuel melt	Xe, Kr, Cs, I, Te > 70 Sr, Ba > 24 Pr > 0.8	Kr-87 = 0.22 I-133 = 2.1	> 2.7E4	> 1650	Core uncovery	6 - 13

Characteristics of Categories of Fuel Damage*

* This table is intended to supplement the methodology outlined in this report and should not be used without referring to this report and without considerable engineering judgement.

** These values are from Figure 17 and should be revised for times other than 10 hours.

*** $\frac{\text{Kr-87}}{\text{Xe-133}}$, $\frac{\text{I-133}}{\text{I-131}}$

Table 7 Expected Fuel Damage Correlation With Fuel Rod Temperature

Fuel Damage	Temperature °F*
No Damage	< 1300
Clad Damage	1300 - 2000
Ballooning of zircaloy cladding	> 1300
Burst of zircaloy cladding	1300 - 2000
Oxidation of cladding and hydrogen generation	> 1600
Fuel Overtemperature	2000 - 3450
Fission product fuel lattice mobility	2000 - 2550
Grain boundary diffusion release of fission products	2450 - 3450
Fuel Melt	> 3450
Dissolution and liquefaction of UO_2 in the Zircaloy - ZrO_2 eutectic	> 3450
Melting of remaining UO_2	5100

* These temperatures are material property characteristics and are non-specific with respect to locations within the fuel and/or fuel cladding.

Figure 1 Water Density Ratio (Temperature vs. STP)

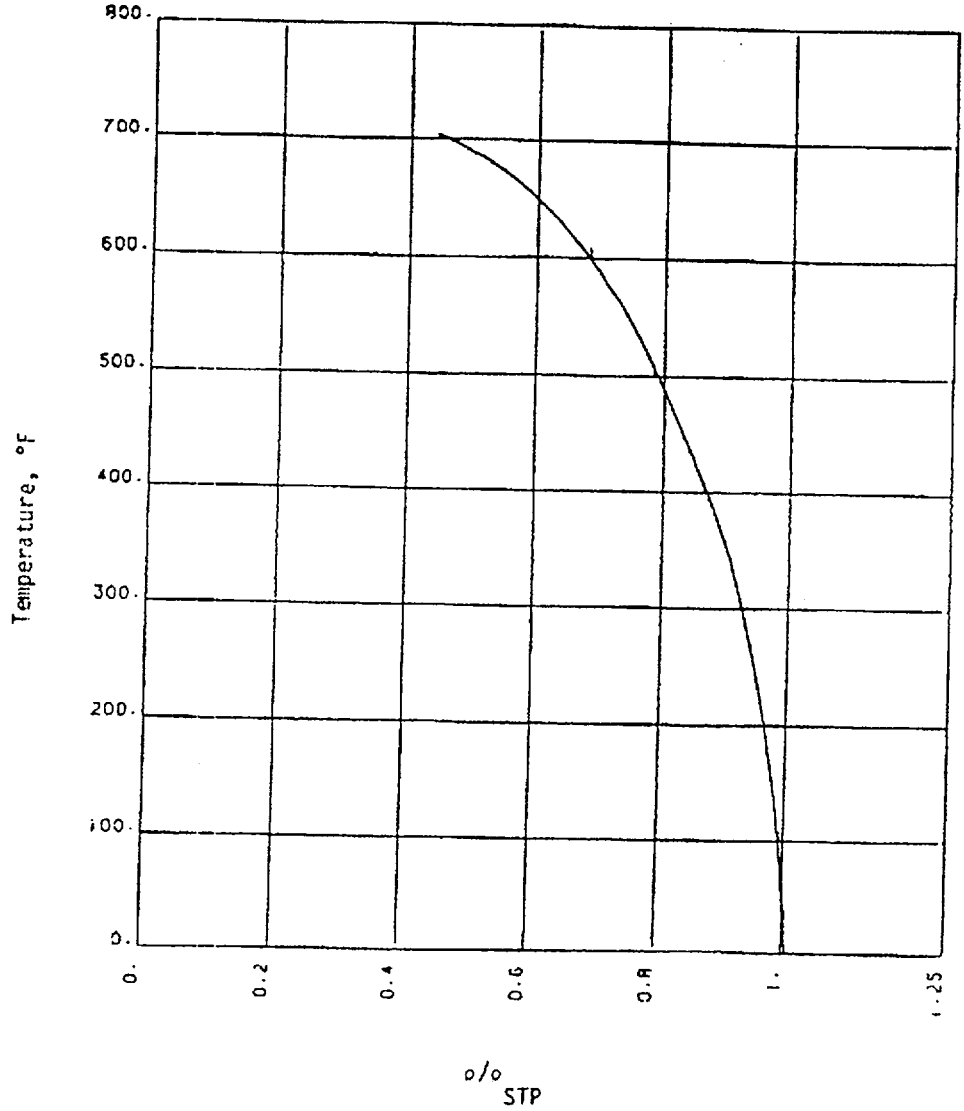

Figure 2 Power Correction Factor For CS-134 Based on Average Power During Operation

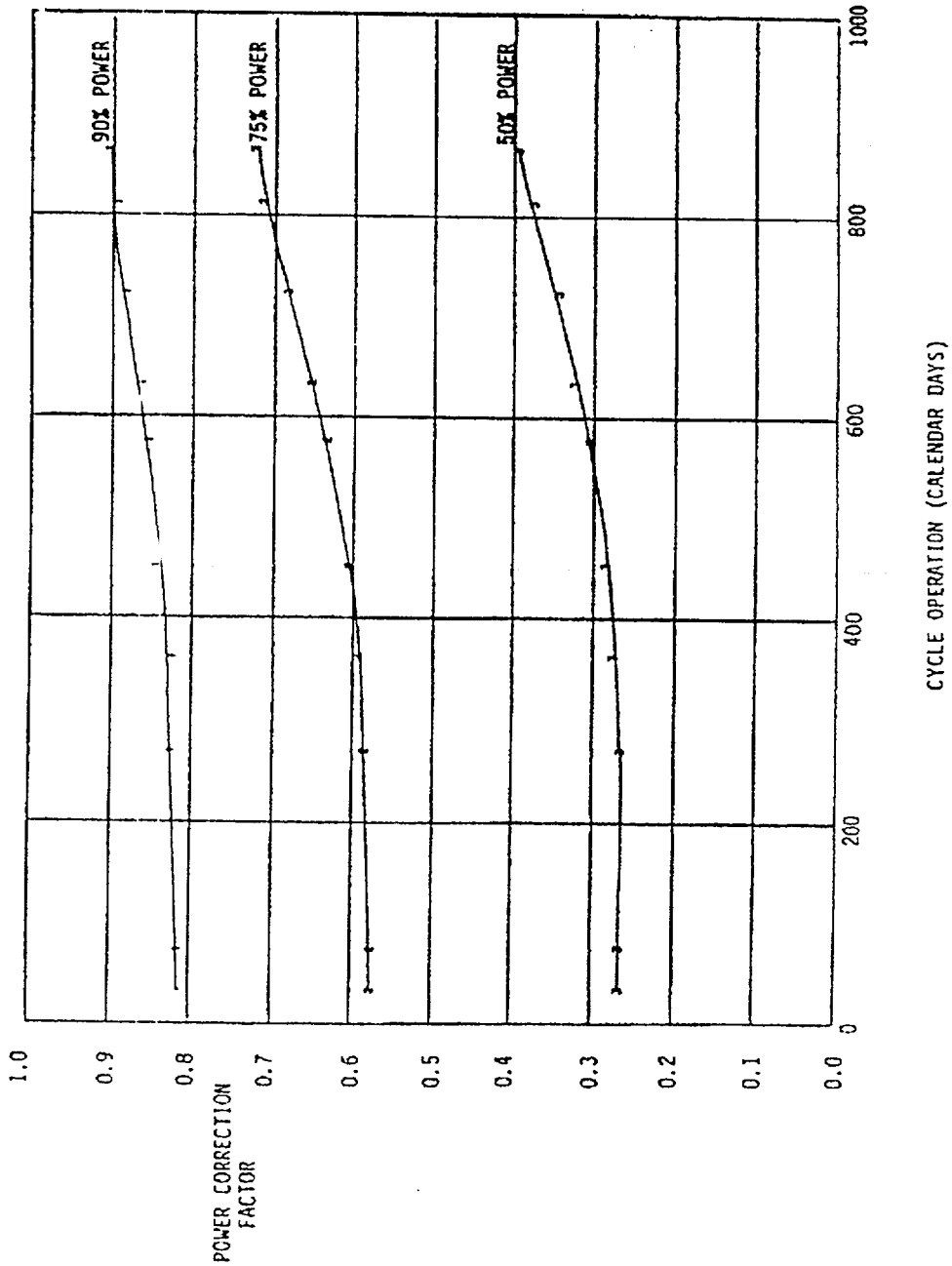

Figure 3 Relationship of % Clad Damage With % Core Inventory Released of XE-133

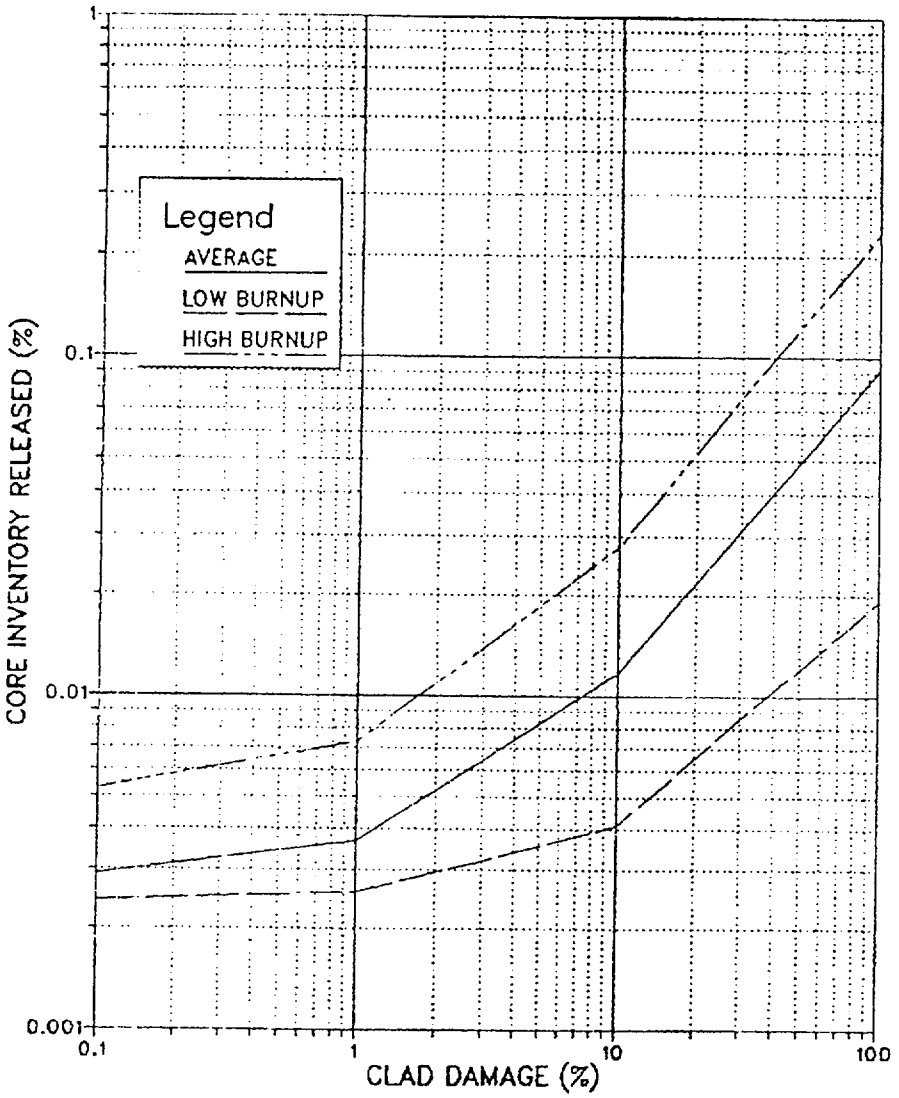

Figure 4 Relationship of % Clad Damage With % Core Inventory Released of I-131

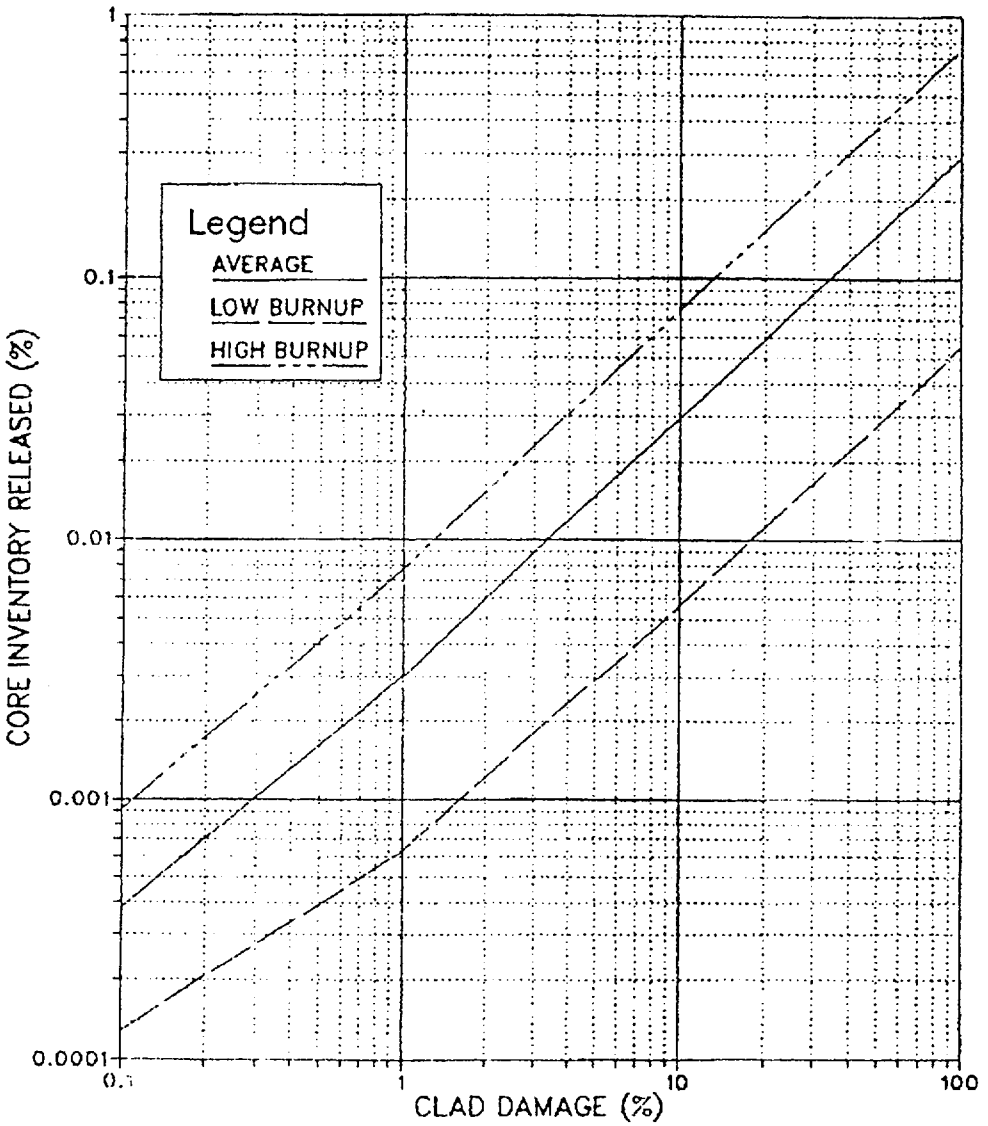

Figure 5 Relationship of % Clad Damage With % Core Inventory Released of I-131 W/Spiking

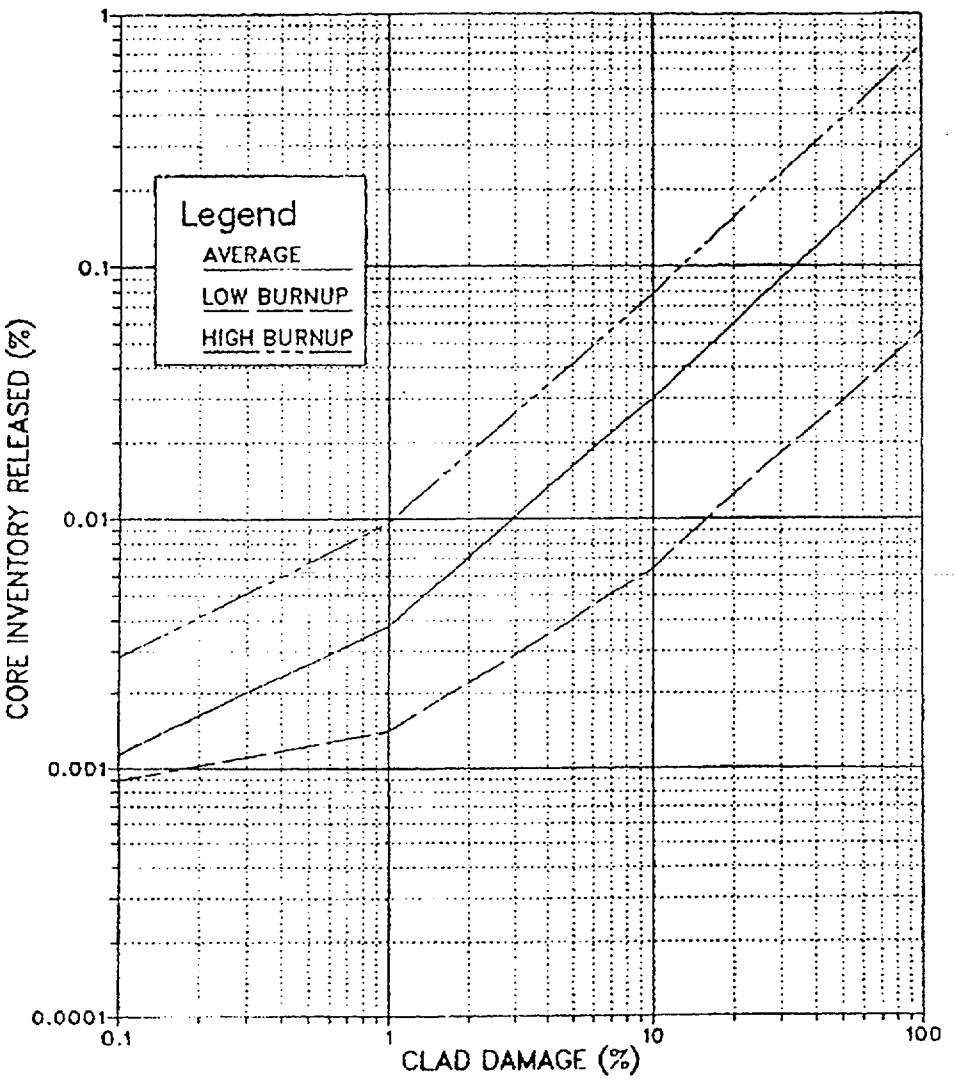

Figure 6 Relationship of % Clad Damage With % Core Inventory Released of KR-87

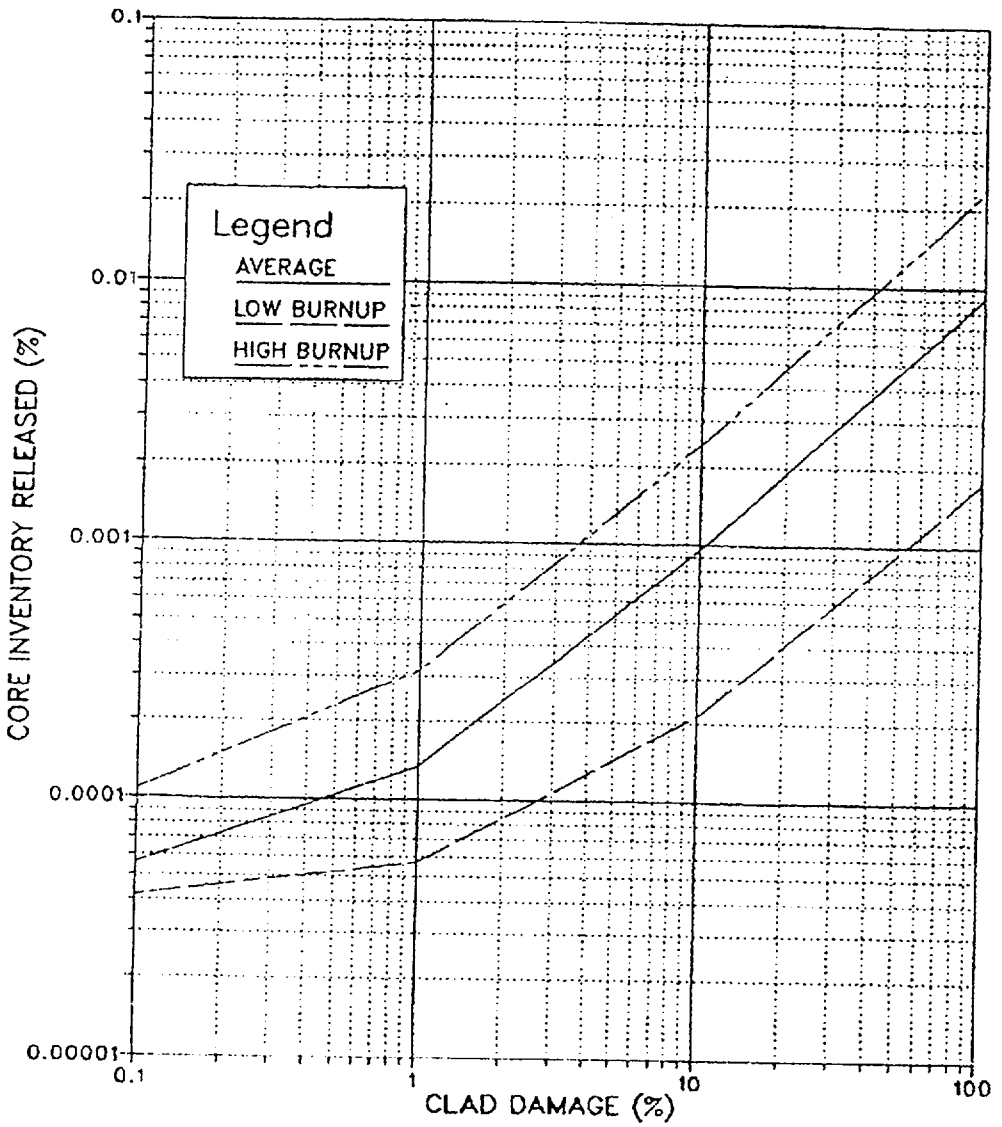

Figure 7 Relationship of % Clad Damage With % Core Inventory Released of XE-131M

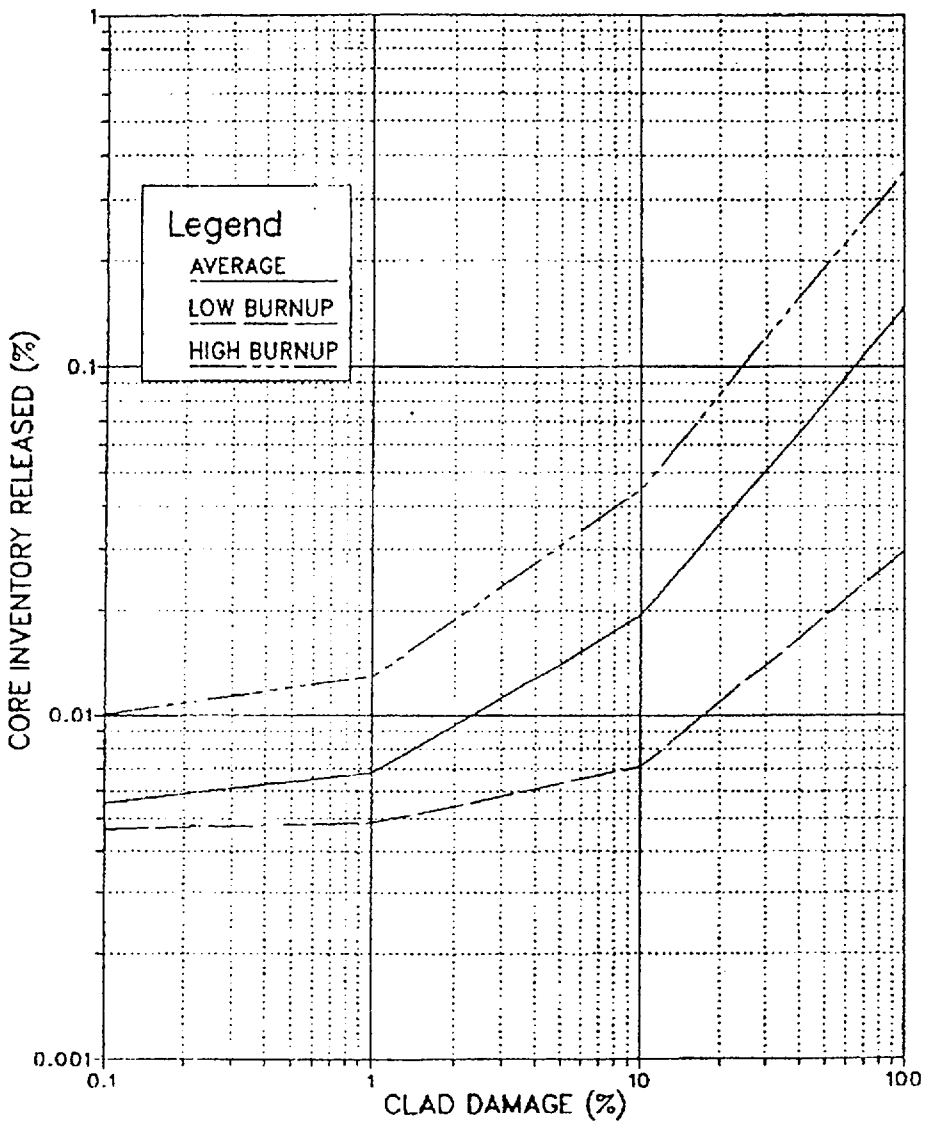

Figure 8 Relationship of % Clad Damage With % Core Inventory Released of I-132

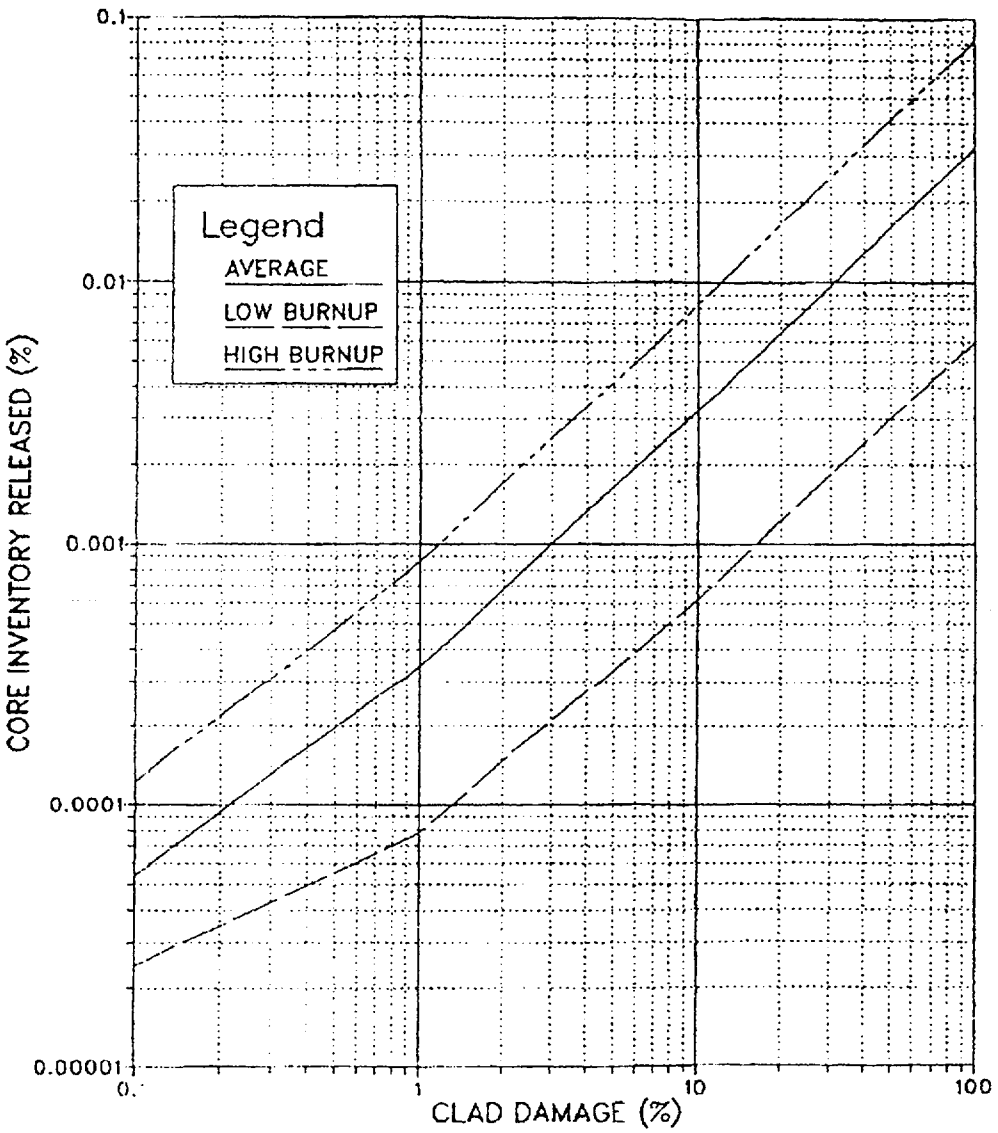

Figure 9 Relationship of % Clad Damage With % Core Inventory Released of I-133

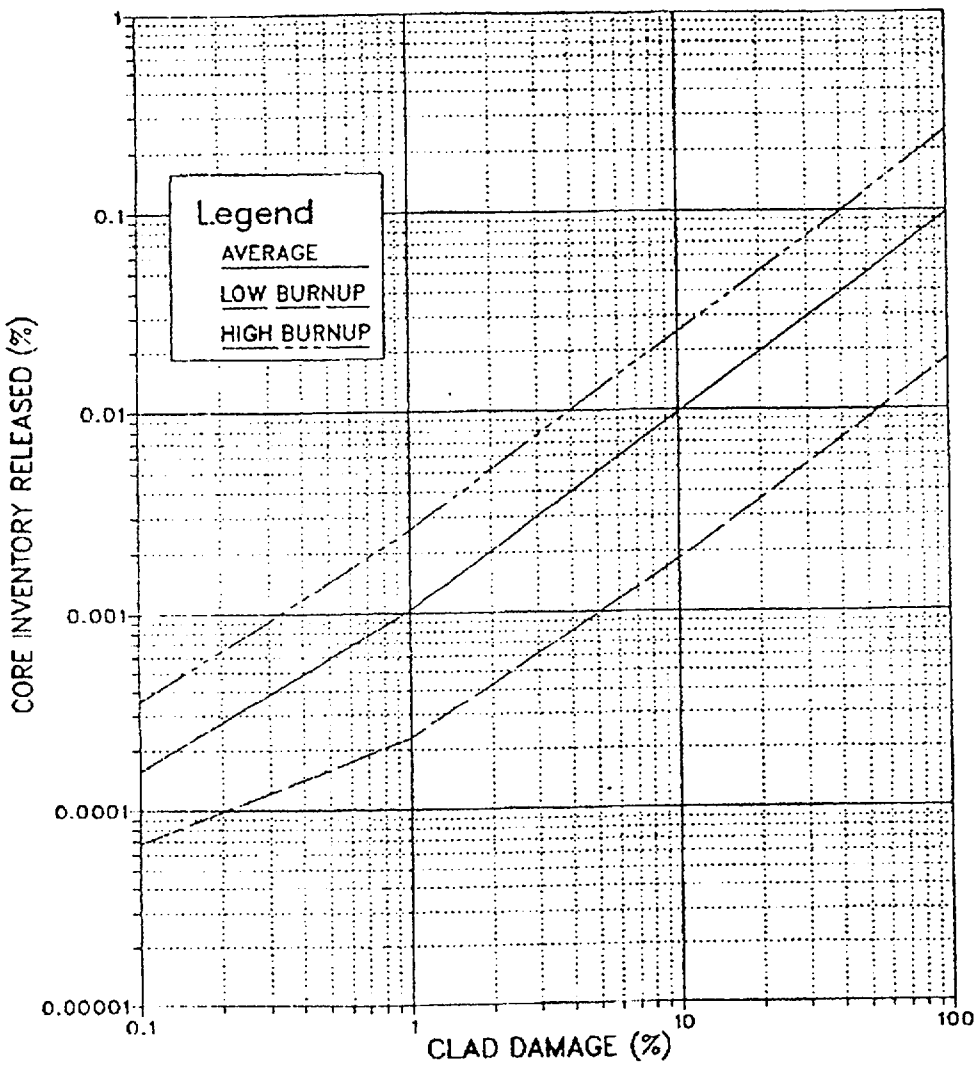

Figure 10 Relationship of % Clad Damage With % Core Inventory Released of I-135

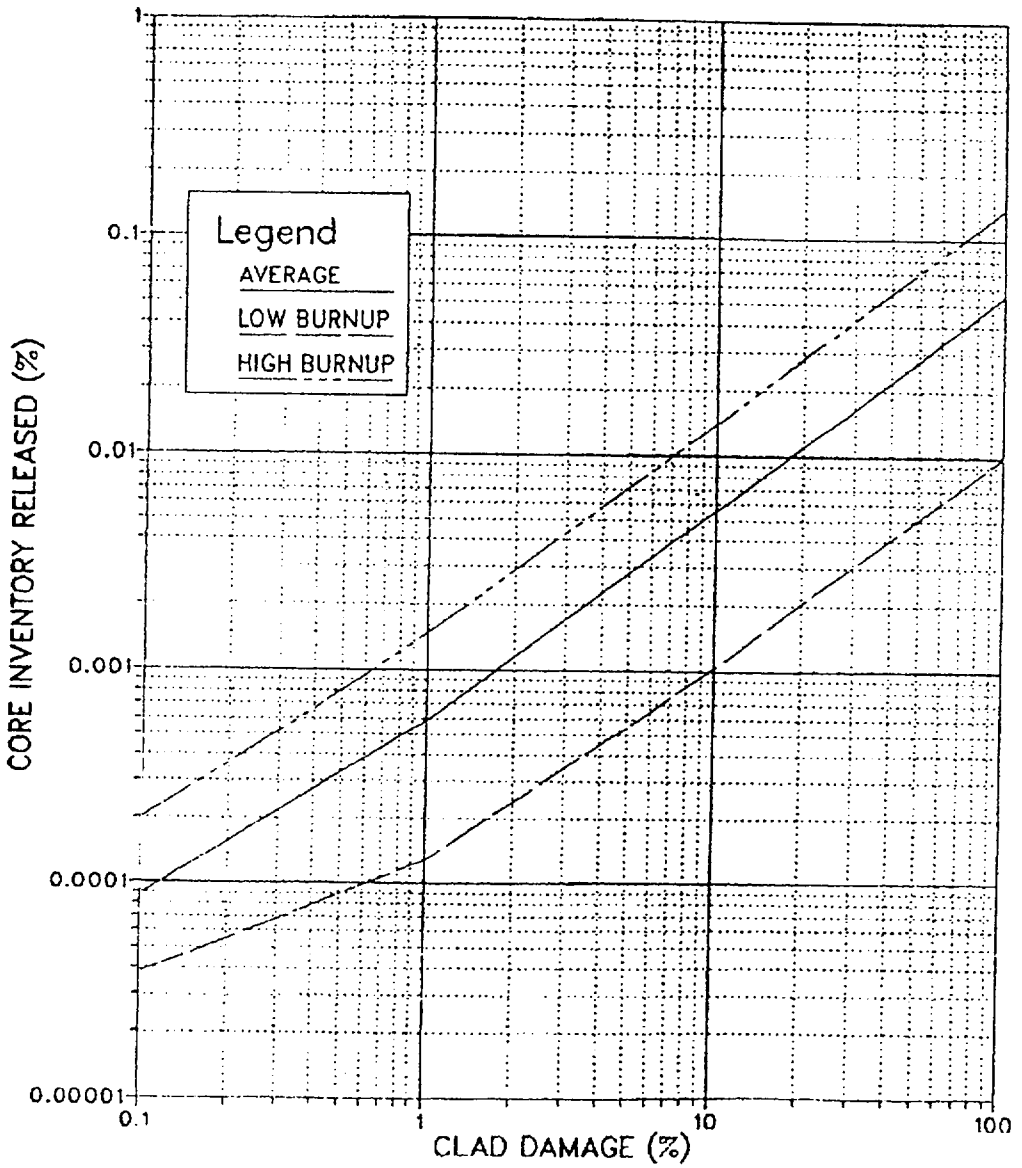

Figure 11 Relationship of % Fuel Over Temperature With % Core Inventory Released of XE, KR, I, or CS

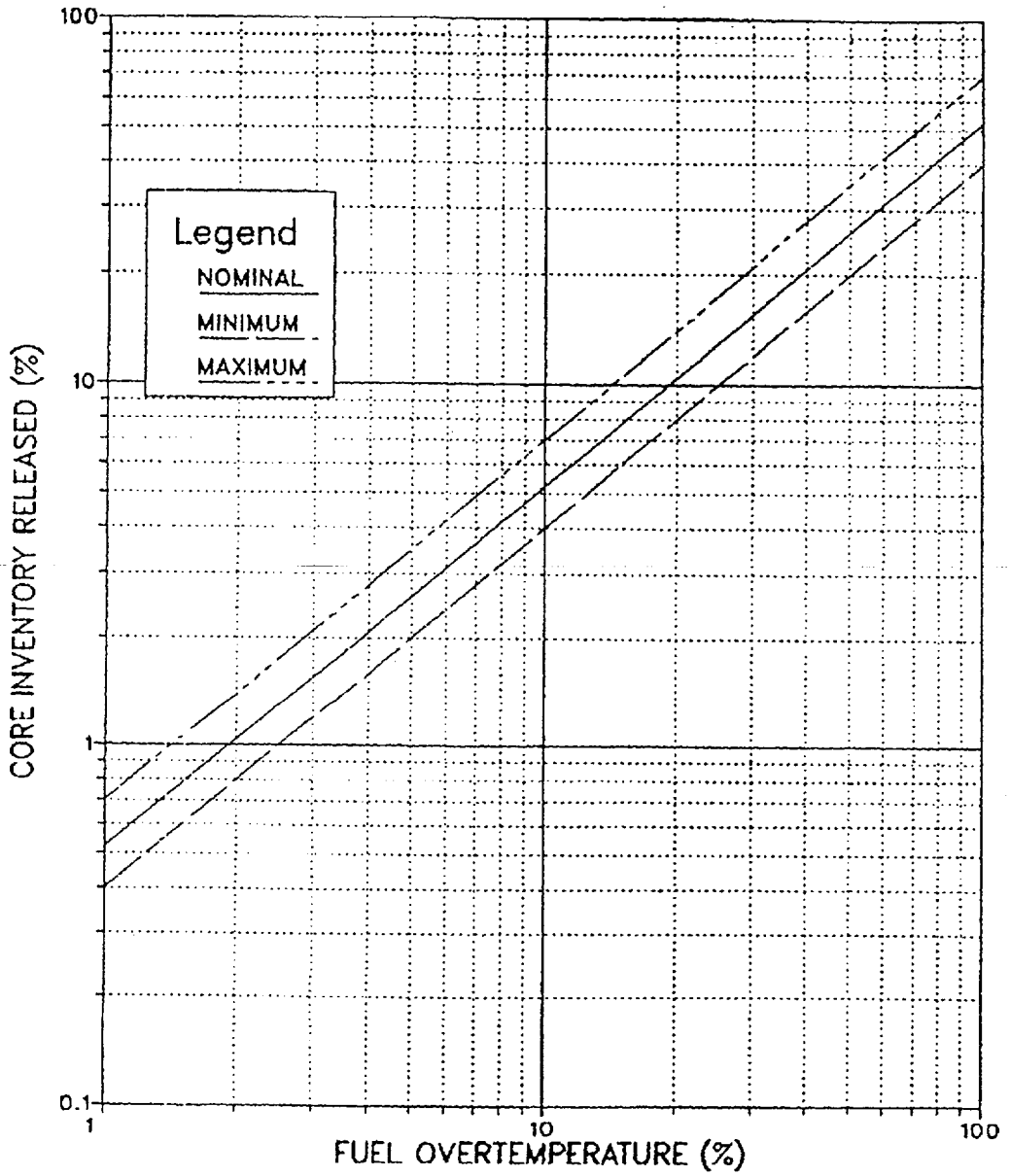

Figure 12 Relationship of % Fuel Over Temperature With % Core Inventory Released of BA or SR

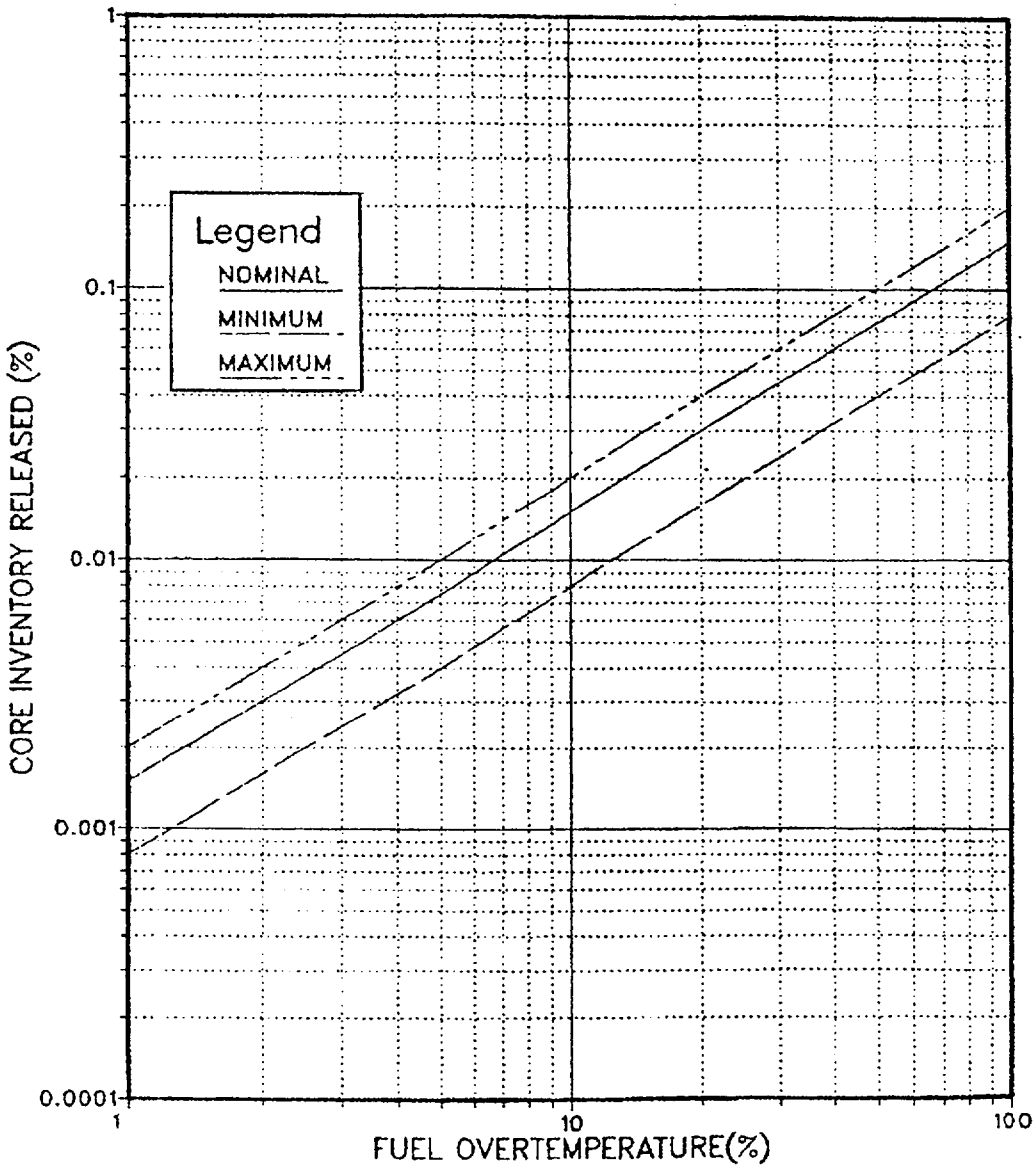

Figure 13 Relationship of % Fuel Melt With % Core Inventory Released of XE, KR, I, CS or TE

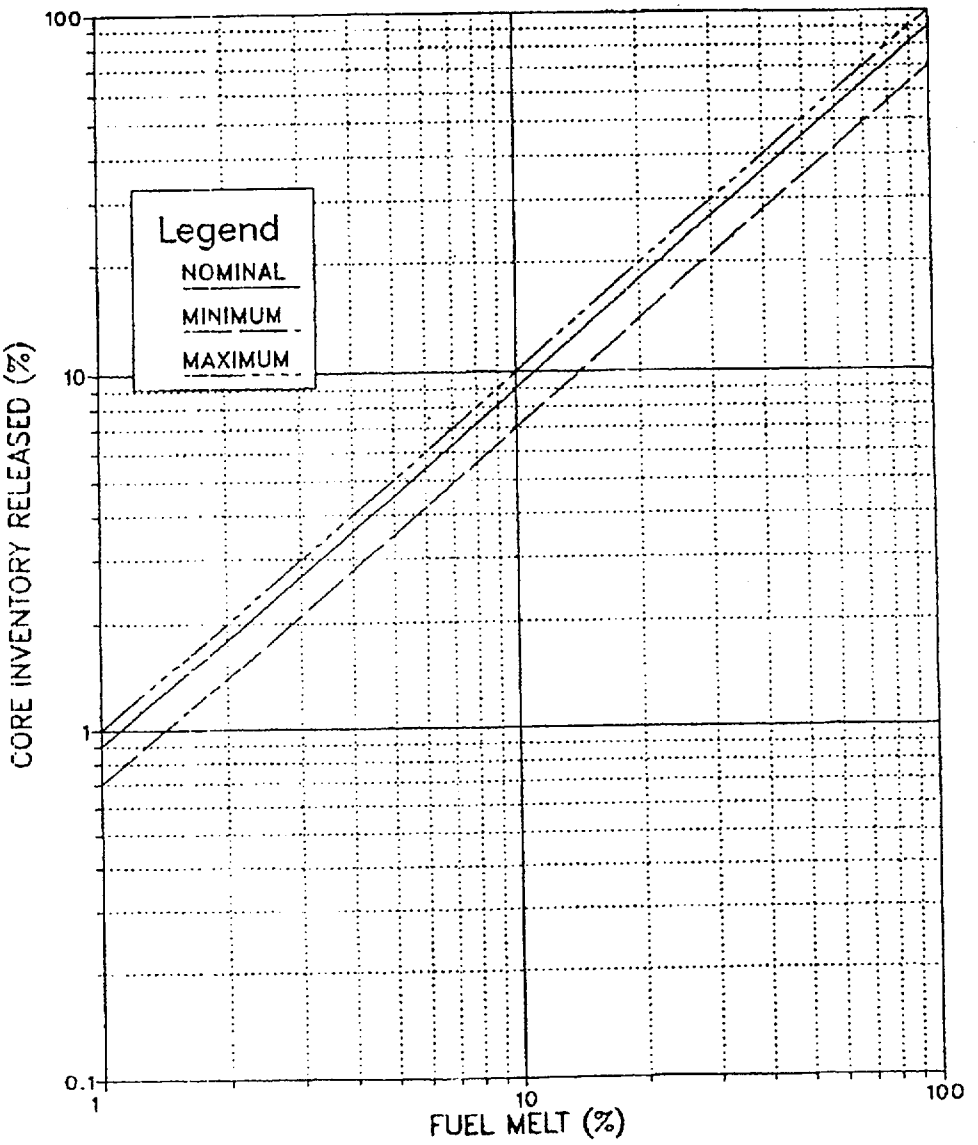

Figure 14 Relationship of % Fuel Melt With % Core Inventory Released of BA or SR

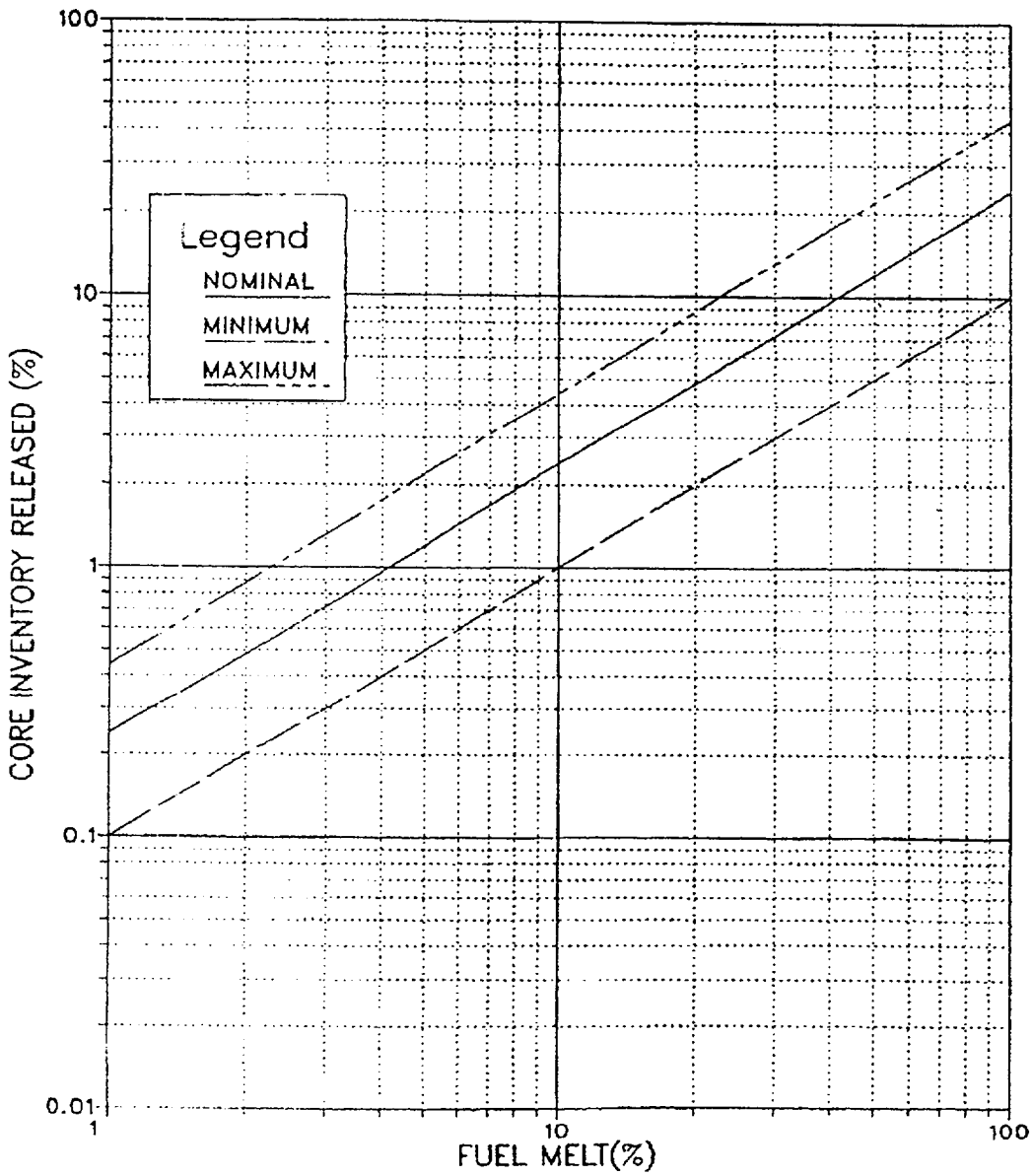

Figure 15 Relationship of % Fuel Melt With % Core Inventory Released of PR

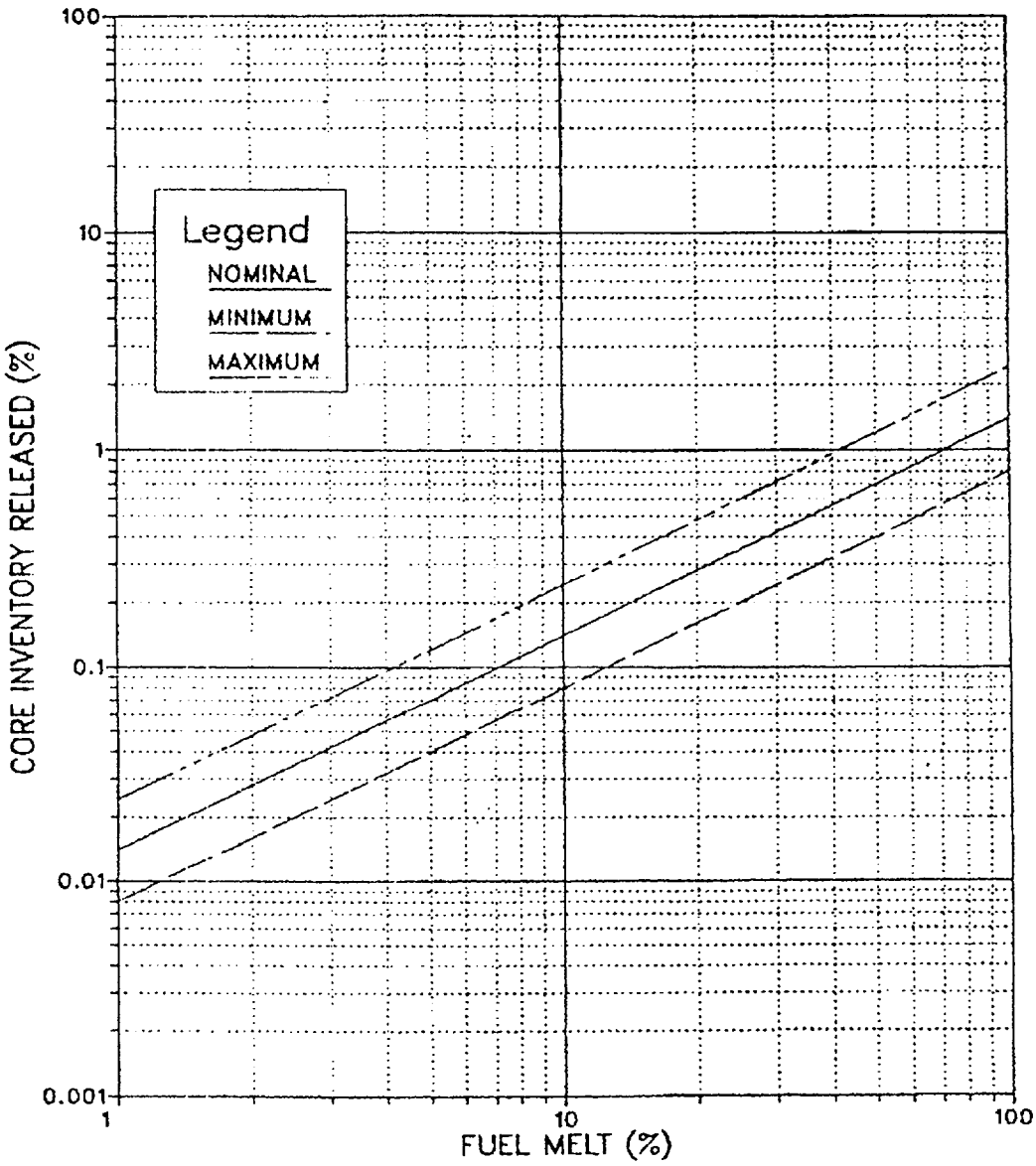

Figure 16 Containment Hydrogen Concentration Based on Zirconium Water Reaction

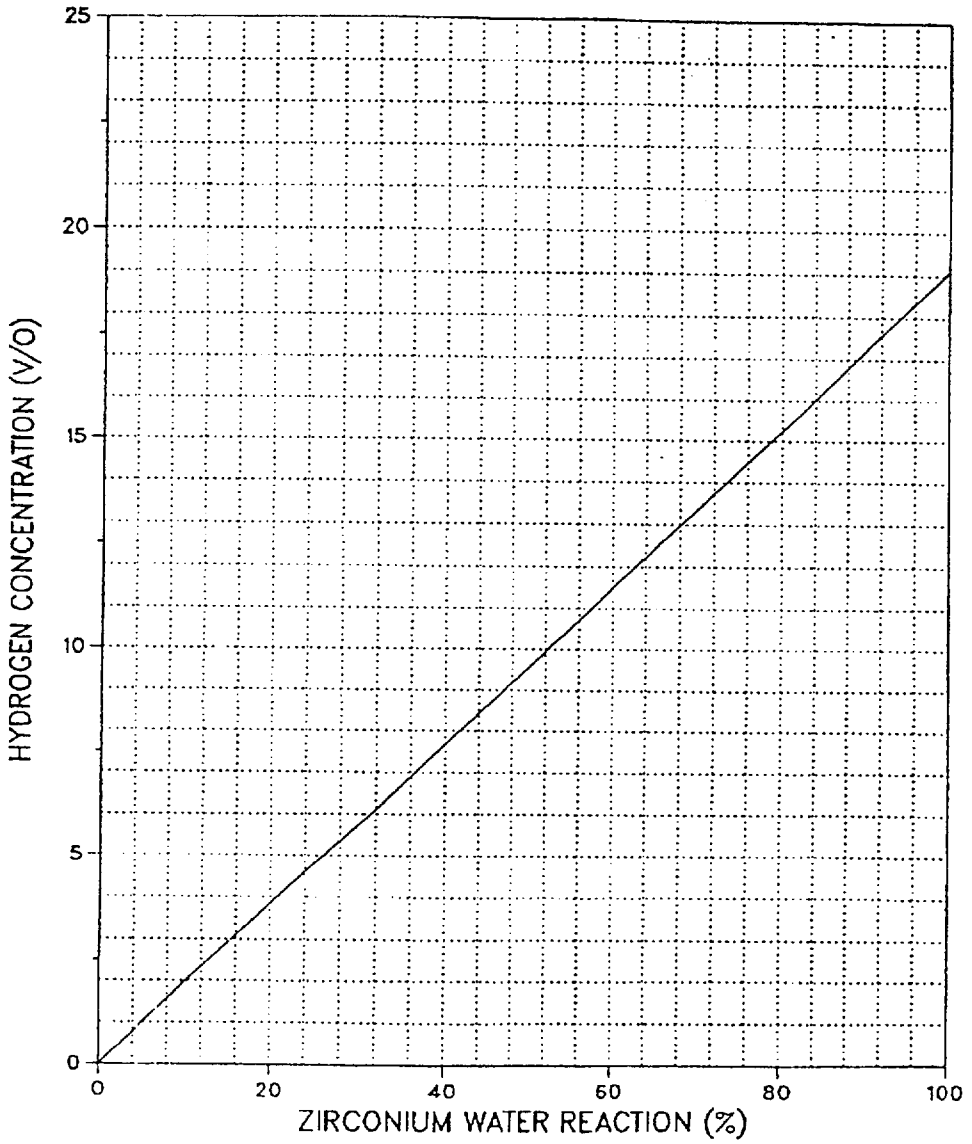

Figure 17 Percent Noble Gases in Containment

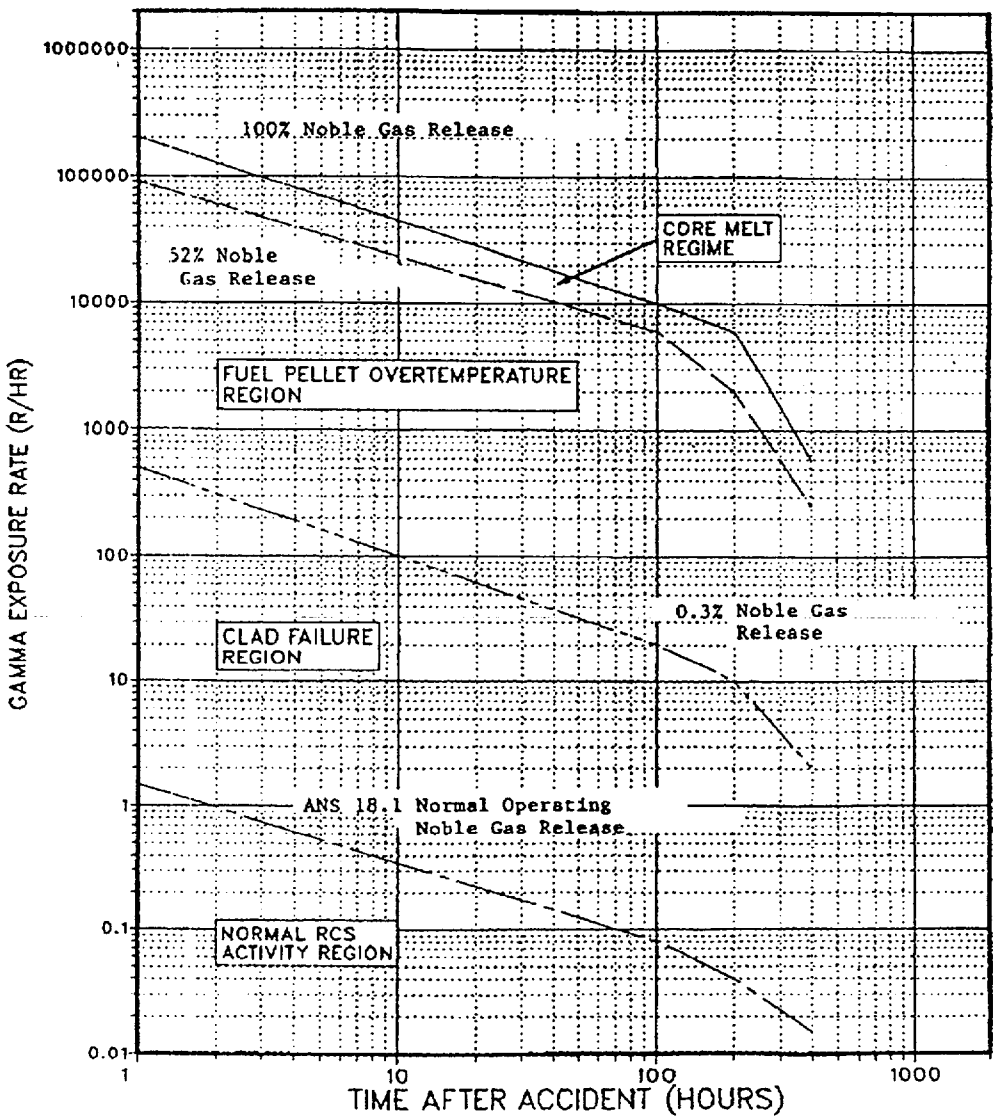

Figure 18 RCS Dose Rate vs. RCS Activity Concentrations 1 Hour After Shutdown

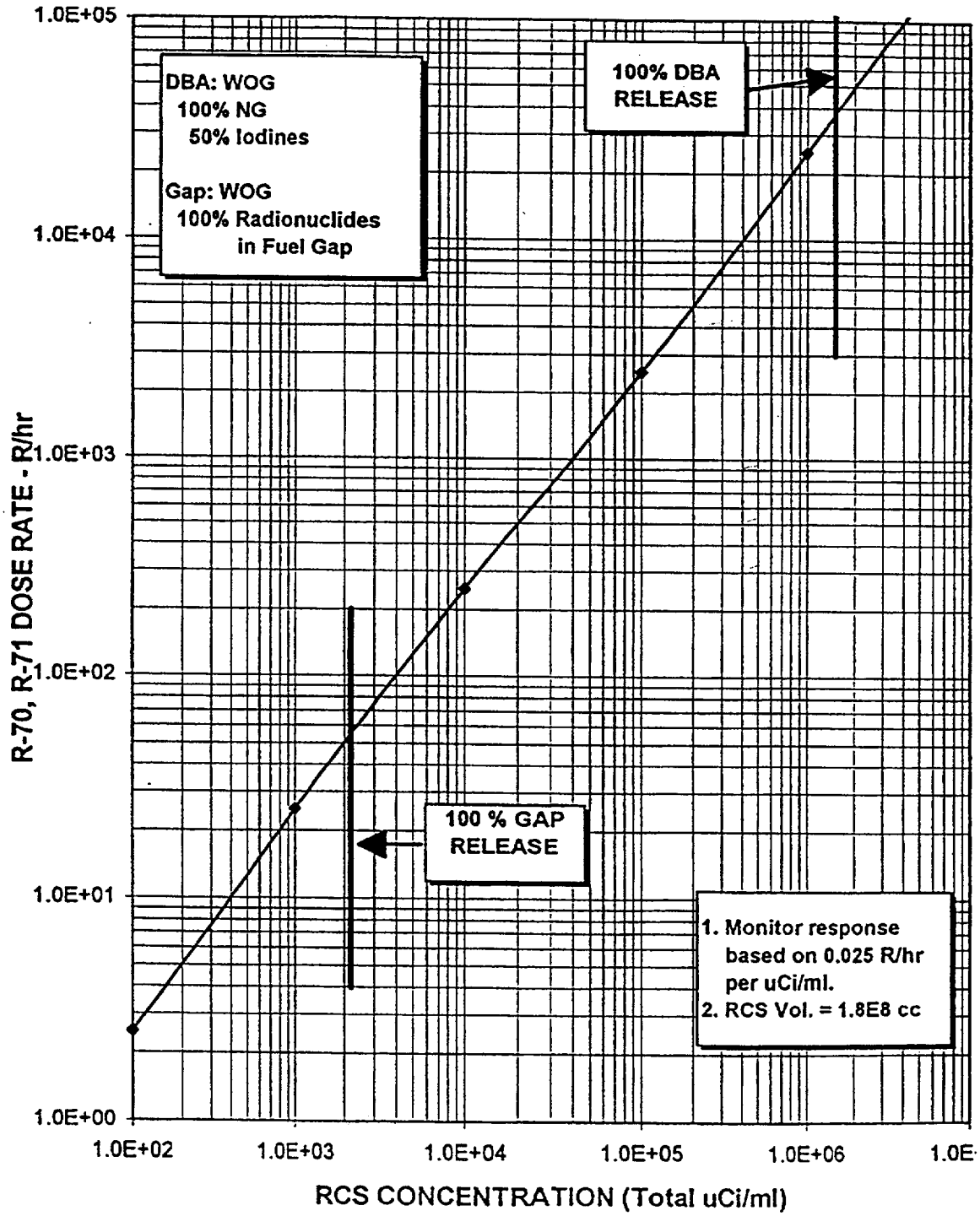

Attachment 1 Thermally Induced Current Errors in Containment Radiation Monitors

1. R-48/R-49 & R-70/R-71Thermally Induced Errors

R-48/49 or R-70/71 signals may experience errors during the first 4 hours after a DBA LOCA. Industry testing of high range radiation monitor (HRRM) systems has revealed that signal errors or the loss of signal are the result of thermally induced current (TIC) and/or moisture intrusion into the coaxial connectors. Based on the EPRI Plant Support Engineering study, worst case estimated errors are summarized below:

Time After Postulated DBA	Estimated Errors in Readings
~ 1 minute	> 3000 R/hr
~ 2 minutes	~ 100 R/hr
~ 8 minutes	~ 15 R/hr
~ 2 to 4 hours	~ - 9 R/hr
> 4 hours	No Effect from TIC

More background information concerning thermally induced current in high range radiation monitors is described in Section III.

Please note that errors in the range of ±10 R/hr one hour after a postulated DBA has minimal effect on our assessment of fission product release to containment when we are considering magnitudes of > 100 R/hr reading to be confirmation of fission producttreleased to containment.

2. Background on Thermally Induced Current (TIC) on High Radiation Monitors

Background

Excerpts from: PINGP Response to High Range Radiation Monitor Cable Study: Phase II, Report No. TR-112582 November 2000.

Transient signal errors have been observed in industry testing of the high range radiation monitor (HRRM) system. At PINGP, these are plant radiation monitors RE-48 and RE-49. The investigation into this issue revealed that signal errors or the loss of signal are the result of thermally induced currents (TICs) and/or moisture intrusion into the coaxial connectors. Information Notices, IN 97-45 and IN 97-45 Supplement 1, were issued by the NRC to alert licensees to these potential issues.

Attachment 1 Thermally Induced Currrent Errors in Containment Radiation Monitors

EPRI Plant Support Engineering (PSE) was tasked to study the significance of this issue, which resulted in the issuance of TR-112582, "High Range Radiation Monitor Cable Study: Phase II". This study was focused on the thermally induced current phenomena since moisture intrusion issues are well understood within the industry and have more generic applications. Phase I of the EPRI study confirmed that TIC existed and was significant under thermal transients. Phase II of the study identified the sources of the TIC and developed a mathematical model for cable responses to thermal transients.

Study Results and Analysis

Using the developed profiles in the Phase II study, the actual amplitude, duration, and sign of HRRM signal errors to be expected could be determined. From this data, PINGP was able to ascertain the approximate expected signal error for the HRRMs during the postulated DBA. The expected radiation readings due to the TIC phenomena, based upon the worst case cable length, are as follows:

50 seconds	3872 R/hr
100 seconds	88 R/hr
500 seconds	13.2 R/hr
8000-15000 seconds	-8.8 R/hr
>15000 seconds	no effect from TIC

From 8000 seconds until 15000 seconds, the HRRMs could provide a "fail" alarm, based on the required "keep alive" signal current of 1E-11 amps since the current may drop to –8.8E-11 amps. It should be noted that any significant radiation releases would drive the current back up and the HRRMs would function properly, except for the-8.8 R/hr error that may be present. After 15000 seconds (4.1 hours), there would be no TIC effects on the HRRMs.

The installed HRRM cable at PINGP is the worst case tested cable, Rockbestos RSS-6-104, and is in greater lengths than were tested, 130 feet tested vs. 290 feet installed (worst case). Other variables that could significantly effect the TIC phenomena are, 1) the tested cable was not installed within conduit whereas the PINGP cable runs are installed entirely within conduit, 2) the temperature differential of the test samples, 100 degc, is greater than the temperature differential from the PINGP accident profile, 68 degc, 3) the EPRI mathematical model was developed based on hypothetical LOCA profiles, which are more severe than the PINGP LOCA profile, and 4) consideration regarding whether the test methodology of immersion of the test samples into a ice bath and then to a boiling water plunge is representative of what the cable would experience during an actual transient.

Attachment 1 Thermally Induced Currrent Errors in Containment Radiation Monitors

PINGP Response to HRRM Signal Error

During the initial phase of any postulated accident, it would not expected to see indication of actual fuel damage for the first 10-15 minutes. If indeed the alarms would come in for RE-48 and RE 49, Operations would be occupied with accident mitigation and monitoring tasks during this time period and this alarm, even though acknowledged, would be ignored during this period. Other parameters would be available for alarm validation, i.e., core exit temperatures, RVLIS, radiation monitors located in the Auxiliary Building, etc. Due to the nature of the TIC phenomenon, the radiation level readings, even if the alarms have come in, would be decreasing. Again, this is validation of an erroneous signal and not actual core damage.

For emergency plan response and possible SAMG considerations, the TIC phenomenon would no longer be affecting the radiation monitors and/or due to the earlier alarms and decreasing readings that were noted, it would be confirmed that no fuel damage had occurred and these were indeed erroneous readings. A general site emergency alarm would be activated at 1000 R/hr, but as cited previously, this is well after the expected error signal has been significantly reduced. Other variables would be available to verify possible fuel damage and any possible actions required within the emergency plan procedures would not occur until after the TIC phenomena has either passed or has been verified to be erroneous.

F3	TRANSITION TO RECOVERY	NUMBER: F3-30
		REV: 6

REFERENCE USE
• *Procedure segments may be performed from memory.*
• *Use the procedure to verify segments are complete.*
• *Mark off steps within segment before continuing.*
• *Procedure should be available at the work location.*

O.C. REVIEW DATE:	OWNER:	EFFECTIVE DATE
040102	M. Werner	4-15-02

1.0 PURPOSE

The purpose of this procedure is to provide instructions for transition to the Recovery phase. This procedure specifies the criteria for termination of the emergency phase and guidance for the Emergency Director and Technical Support Center Group Leaders conducting on-site recovery planning.

2.0 APPLICABILITY

This Instruction **SHALL** apply to all Emergency Directors, TSC Group Leaders, and TSC Record Keepers.

3.0 PRECAUTIONS

NONE

4.0 RESPONSIBILITIES

4.1 Emergency Director is responsible to implement this procedure and assist the Emergency Manager in the decision to terminate the event or enter the Recovery phase.

4.2 Emergency Manager is responsible for the decision to terminate the event or enter the Recovery phase.

4.3 Plant Manager is responsible to coordinate the on-site recovery activities and assist the Recovery Manager.

4.4 The Recovery Manager (named the Event Manager in 5AWI 1.13.0) is responsible for the overall management of the recovery activities necessary to return the plant to a normal operational or shutdown status.

4.5 TSC Group Leaders are responsible to assess plant conditions in the respective areas and identify short and long term recovery actions necessary to return the plant to a normal operational or shutdown status.

4.6 TSC Record Keeper is responsible to assist the Emergency Director in compiling all identified recovery actions.

5.0 DISCUSSION

5.1 Recovery

In general, an Unusual Event or Alert may be terminated without transition to Recovery phase while a Site Area Emergency or General Emergency will probably require a planned transition to a Recovery phase and the establishment of a Recovery Organization. Whether a Unusual Event/Alert is terminated or a Site Area Emergency/General Emergency transition to a Recovery phase the site procedure 5AWI 1.13.0, "Plant Event Investigation and Recovery", should be reviewed and a determination to implement this procedure completed.

Termination of an Alert classification includes the dismissal of the site Emergency Response Organization. Any necessary in-plant or on-site follow-up activities should be coordinated and managed by the normal plant site organization in accordance with 5AWI 1.13.0. Post-Alert conditions may require the establishment of a Recovery Organization. The Emergency Director and Emergency Manager should make this determination based on the extent of damage or other considerations and implementation of 5AWI 1.13.0 should be completed.

If a Site Area Emergency does not require significant repairs or analysis beyond the capabilities of the normal plant site organization, the event may be terminated without transition to a Recovery phase, however, implementation of 5AWI 1.13.0 should be completed.

5.2 NRC Post-Accident Assessment

It is expected that the NRC will, as a minimum, send an Augmented Inspection Team (AIT) to the plant to perform a thorough investigation of the incident. As a result, the AIT will request the following:

5.2.1 Any failed equipment not necessary for safe shutdown or operation of the plant be quarantined. No work on failed equipment should be performed unless absolutely necessary for plant safety. The NRC will want to perform failure analysis on the failed equipment.

5.2.2 No written or electronic records be destroyed or erased.

5.2.3 Schedules be adjusted or additional resources be made available for NRC interviews with plant personnel involved with the incident. A court reporter may be present to transcribe the interviews.

5.2.4 Office space (or trailer space) be made available for the NRC AIT.

6.0 PREREQUISITES

6.1 An Unusual Event or Alert has been declared and conditions indicate that plans for event termination may begin,

or

6.2 A Site Area Emergency or General Emergency has been declared and conditions indicate the immediate emergency phase is over and transition plans to the Recovery phase may begin.

7.0 PROCEDURE

7.1 Termination of an Unusual Event or Alert

7.1.1 As plant conditions stabilize during an Unusual Event or Alert, consider terminating the event classification.

7.1.2 Assess plant and environmental conditions. PINGP 1102 or PINGP 1103, Shutdown Safety Assessment, may be used as an assessment guide.

7.1.3 The emergency classification may be terminated once the following criteria are met:

A. The plant is in stable condition with at least one fission product barrier intact,

and

B. Radioactive gaseous and liquid effluent are being controlled within the following limits:

1. Gaseous effluent release rates (or resulting dose rates) are within plant limits as defined in Section 3.1 of H4, ODCM.

2. Liquid effluent release rates (or resulting concentrations) are within the plant limits as defined in Table II, Column 2 of H4, ODCM, Table 4.3 Old 10CFR20 Appendix B (April 1992).

and

C. The potential for future degradation of plant conditions is small (PINGP 1102 or PINGP 1103, Shutdown Safety Assessment, may be used as an assessment guide).

7.1.4 When the criteria for termination are met, terminate the Unusual Event or Alert.

A. Termination of an Unusual Event classification may be performed by the Shift Manager.

B. Termination of an Alert classification **SHALL** be performed by the Emergency Director if the EOF is not activated.

C. Once the EOF is activated and responsible for off-site communications, the Emergency Manager **SHALL** terminate the Alert classification.

7.1.5 Upon event termination, ensure a message is announced and repeated over the public address system advising personnel of the termination. Additional comments may be added as necessary to update plant personnel.

"ATTENTION PLANT PERSONNEL. THE (Specify Emergency Class) IS TERMINATED."

For Alert termination add:

"SECURE THE EMERGENCY RESPONSE CENTERS AND RESUME NORMAL DUTIES."

7.1.6 Review and approve the Notification Report Form (PINGP 577) and designate the SEC to complete the notifications of state, local and site personnel in accordance with F3-5, "Emergency Notifications." If the EOF has the responsibility for off-site communication, the Emergency Manager will coordinate the event close-out and off-site notifications.

7.1.7 Initiate outage planning if equipment and plant systems are significantly damaged and extended plant shutdown is required in accordance with 5AWI 1.13.0.

7.1.8 Direct plant Document Control group to collect all emergency checklists, documentation and records generated during the event.

7.1.9 Provide the necessary resources to support the requirements of the NRC post-event investigative team.

7.1.10 Develop and submit NRC follow-up reports through normal administrative procedures.

7.2 Transition to the Recovery Phase

7.2.1 WHEN the event has stabilized and plant conditions warrant possible transition to the Recovery phase, THEN assess plant and environmental conditions. PINGP 1102 and PINGP 1103, Shutdown Safety Assessment, may be used with other assessment tools to assess the condition of the plant.

7.2.2 Direct the TSC Group Leaders to assess conditions in their respective areas and identify recovery actions necessary to return the plant to a normal operational or shutdown status. TSC Group Leaders should use the Recovery Action Item Form, PINGP 1017 to identify their action items.

7.2.3 Direct the TSC Record Keeper to compile all identified recovery actions on the Recovery Action Item Form, PINGP 1017. The list should identify short-term corrective actions (to be completed within hours or days) and long-term actions which may require an extended plant outage (i.e., weeks or months).

NOTE:	**If the Site Area Emergency event does not require significant repairs or analysis beyond the capabilities of the normal plant site organization and the conditions of 7.1.3.A, 7.1.3.B, & 7.1.3.C are met, then the Site Area Emergency may be terminated without a transition to Recovery phase.**

7.2.4 When the following plant and environmental criteria are met, consider transition to the Recovery phase.

A. The plant is in a stable condition with at least one fission product barrier intact,

and

B. Radioactive gaseous and liquid effluent are being controlled within the following limits:

1. Gaseous effluent release rates (or resulting dose rates) are within plant limits as defined in Section 3.1 of H4, ODCM.

2. Liquid effluent release rates (or resulting concentrations) are within the plant limits as defined in Table II, Column 2 of H4, ODCM, Table 4.3 Old 10CFR20 Appendix B (April 1992),

and

C. If Severe Accident Management (SAM) was implemented, the SAM termination criteria per SAMG Diagnostic Flow Chart are met,

and

D. The potential for future degradation of plant conditions is small (PINGP 1102 or PINGP 1103, Shutdown Safety Assessment, may be used as an assessment guide),

and

E. NRC Headquarters (or the Director of Site Operations of the on-site response team) concurs with the transition to Recovery.

7.2.5 When the criteria for transition to Recovery are met, contact the Emergency Manager and discuss the conditions.

7.2.6 If the Emergency Manager concurs that conditions for Recovery are met, request the Emergency Manager discuss the proposed transition with the NRC.

NOTE:	**If the NRC Incident Response Team has not been mobilized or has not arrived, the proposal to enter the Recovery phase should be discussed with NRC Headquarters. If the NRC Response Team is on-site, the Emergency Manager and Emergency Director should meet with the Director of Site Operations to discuss the transition to Recovery.**

7.2.7 If the NRC concurs that transition to Recovery is appropriate, obtain the compiled list of short and long term corrective actions on the Recovery Action Item Form PINGP 1017. Review the list with the TSC Group Leaders to ensure all items have been addressed.

7.2.8 Upon review completion, inform the Emergency Manager. Arrange a meeting with Emergency Manager and Recovery Manager to discuss the Recovery actions and the transition to Recovery. Implementation of 5AWI 1.1.13 should be started at this time also.

7.2.9 When the transition to Recovery is made, ensure a message is announced and repeated over the public address system advising personnel of the transition to the Recovery Phase. Additional comments may be made as to the current emergency center staffing needs or closeout of selected emergency centers.

"ATTENTION ALL PLANT PERSONNEL. THE (Specify the Emergency Class) IS TERMINATED. THE PLANT IS GOING TO RECOVERY. A RECOVERY ORGANIZATION IS BEING ESTABLISHED."

7.2.10 Initiate outage planning if equipment and plant systems are significantly damaged and extended plant shutdown is required.

7.2.11 Direct Document Control to collect all emergency checklists, documentation and records generated during the event.

7.2.12 Provide the necessary resources to support the requirements of the NRC post-event investigative team.

7.2.13 Develop and submit NRC follow-up reports through normal administrative procedures.

Figure 1 Example Of Recovery Action Item Form

EXAMPLE ONLY
USE CURRENT REVISION

PINGP 1017, Rev. 4
Page 1 of 3
Retention: Life

RECOVERY ACTION ITEM FORM

Short Term = Hours or Days
Long Term = Weeks or Months

PERFORM ASSESSMENTS IN THE FOLLOWING AREAS AND IDENTIFY POTENTIAL SHORT TERM AND LONG TERM RECOVERY ACTION ITEMS:

A. Current operational status of plant systems and equipment involved in the emergency. Include reviews of "Operator Workarounds" and current "in progress" Work Orders to evaluate current plant configuration.

B. Current Operational status of the unaffected unit and its effect on the affected unit.

C. Identification of all systems, components, or equipment damaged or made inoperable during the event.

D. Estimate of necessary repairs, parts and tools to restore all affected systems and equipment back to a fully operational state.

E. Identification of special tools or equipment that may be required during the restoration period.

F. Estimate of additional personnel resources that may be required during the restoration period.

G. Identification of applicable plant surveillance tests and procedures required for post maintenance testing.

H. Identification of applicable system operability tests and procedures to restore plant systems to normal operational or shutdown configuration.

I. Estimate of liquid and solid radioactive waste generated during the event and recommendations on management and disposal.

J. Identification of special radiological considerations for personnel entry into affected areas with elevated dose rates or contamination levels (i.e.; temporary shielding engineering evaluations, robotics, etc.)

K. Estimate of the decontamination and monitoring activities necessary to restore affected areas inside and outside the plant site to pre-accident levels.

L. Identification of continued offsite radiological sampling and potential assistance to state or local agencies in the area of sampling, monitoring, and decontamination.

M. Following a containment LOCA, sample and adjust (if necessary) the pH of the primary coolant/recirculation loop within 48 hours after the accident. Acceptable range is between 7.0 and 10.5 to minimize the potential for stress corrosion cracking of the stainless steel piping and components.

Figure 1 Example Of Recovery Action Item Form

EXAMPLE ONLY
USE CURRENT REVISION

PINGP 1017, Rev. 4
Page 2 of 3

RECOVERY ACTION ITEM FORM

SHORT-TERM RECOVERY ACTIONS
(Hours or Days)
PREPARED BY _____ TSC _____ EOF (Check one)

ITEM #	ACTION ITEM DESCRIPTION	COMMENTS

Reviewed by: _____ Date: _____
Emergency Director/Emergency Manager

Figure 1 Example Of Recovery Action Item Form

EXAMPLE ONLY
USE CURRENT REVISION

PINGP 1017, Rev. 4
Page 3 of 3

RECOVERY ACTION ITEM FORM

LONG-TERM RECOVERY ACTIONS
(Weeks or Months)
PREPARED BY _____ TSC _____ EOF (Check one)

ITEM #	ACTION ITEM DESCRIPTION	COMMENTS

Reviewed by: _____ Date: _____
Emergency Director/Emergency Manager