Pacific Gas and
Electric Company

Lawrence F. Womack
Vice President
Nuclear Services

Diablo Canyon Power Plant
P.O. Box 56
Avila Beach, CA 93424

805.545.4600
Fax: 805.545.4234

April 15, 2002

PG&E Letter DCL-02-044

U.S. Nuclear Regulatory Commission
ATTN: Document Control Desk
Washington, DC 20555-0001

Docket No. 50-275, OL-DPR-80
Docket No. 50-323, OL-DPR-82
Diablo Canyon Units 1 and 2
License Amendment Request 02-03
Spent Fuel Cask Handling

Dear Commissioners and Staff:

Enclosed is an application for amendment to Facility Operating License Nos. DPR-80 and DPR-82, pursuant to 10 CFR 50.90. This license amendment request (LAR) submits, for Nuclear Regulatory Commission (NRC) review and approval, changes in the implementation of the Diablo Canyon Power Plant (DCPP) NUREG-0612 Control of Heavy Loads Program together with other analyses, design, and procedure changes required to implement a dry cask Independent Spent Fuel Storage Installation (ISFSI). This submittal is in accordance with recommendations of NRC Bulletin 96-02, Item 2.

No DCPP Licenses or Technical Specification (TS) changes are necessary to implement these changes.

Collectively, these changes will allow handling and loading of Holtec International's (Holtec's) multi-purpose canisters and transfer cask in the DCPP 10 CFR 50 facilities. By PG&E letter dated December 21, 2001, (DIL-01-002) "License Application for Diablo Canyon Independent Spent Fuel Storage Installation," PG&E submitted an application to the NRC requesting a site-specific license for an ISFSI at DCPP, in accordance with 10 CFR 72. The ISFSI will use Holtec's HI-STORM 100 System. Approval of this LAR is necessary to implement the Diablo Canyon ISFSI.

A description of the proposed changes, the bases for the changes, and associated-evaluations and Significant Hazard Considerations are provided in Enclosure 1.

A001

PG&E also requests an extension of the NRC's November 12, 1997, criticality monitoring exemption to envelope the activities associated with this LAR, including cask handling. Enclosure 2 provides an exemption request. The Holtec design, along with the associated procedural controls, and the proposed Diablo Canyon ISFSI TS preclude accidental criticality. In addition, radiation monitoring is provided in accordance with General Design Criterion 63, thereby precluding the need for criticality monitoring.

PG&E requests that this LAR be assigned a medium priority for review and approval, since there is no immediate safety concern. However, in order to allow timely removal of spent nuclear fuel and avoid unnecessary spent fuel pool activities, PG&E requests that this LAR be reviewed and approved at the NRC's earliest convenience.

Sincerely,

Lawrence F. Womack
Vice President, Nuclear Services

Enclosures
cc: Diablo Distribution
cc/enc: Steven L. Baggett
Edgar Bailey, DHS
Ellis W. Merschoff
David L. Proulx
David A. Repka
Girija S. Shukla

UNITED STATES OF AMERICA
NUCLEAR REGULATORY COMMISSION

In the Matter of PACIFIC GAS AND ELECTRIC COMPANY	)	Docket No. 50-275 Facility Operating License No. DPR-80
Diablo Canyon Power Plant Units 1 and 2	)	Docket No. 50-323 Facility Operating License No. DPR-82

AFFIDAVIT

Lawrence F. Womack, of lawful age, first being duly sworn upon oath says that he is Vice President, Nuclear Services, Pacific Gas and Electric Company; that he is familiar with the content thereof; that he has executed License Amendment Request 02-03 on behalf of said company with full power and authority to do so; and that the facts stated therein are true and correct to the best of his knowledge, information, and belief.

Lawrence F. Womack
Vice President, Nuclear Services

Subscribed and sworn to before me this 15th day of April 2002.
County of San Luis Obispo
State of California

Notary Public

AMY J. CALLOWAY
Commission # 1275128
Notary Public - California
San Luis Obispo County
My Comm. Expires Aug 26, 2004

TABLE OF CONTENTS

Section	Title	Page
1.0	INTRODUCTION	1
1.1	Overview	1
1.2	Final Safety Analysis Report (FSAR) Update	1
2.0	DESCRIPTION	1
2.1	Cask Handling Procedures	2
2.2	Other Modifications and Procedure Changes	2
2.3	Accident Analyses Revisions and Updates	3
3.0	BACKGROUND	3
3.1	General	3
3.2	Transfer Cask/MPC Loading Process	5
3.3	Unloading Operations	9
4.0	TECHNICAL ANALYSIS	10
4.1	Description of the ISFSI Components	10
4.1.1	HI-Storm 100 Interchangeable MPCs	10
4.1.2	HI-TRAC Transfer Cask	10
4.2	Design and Operational Considerations	11
4.2.1	Fuel Handling Building Crane Auxiliary Lift and Control	11
4.2.2	Heavy Loads Requirements	12
4.2.3	Structural Design	15
4.2.4	Thermal Design	16
4.2.5	Radiological Assessment	18
4.2.6	Water Chemistry Considerations	18
4.2.7	Criticality	20
4.3	Accidents and Events Evaluated	23
4.3.1	Drops And Tipovers	23
4.3.2	Operational Errors and Mishandling Events	34
4.3.3	Support System Malfunctions	37
4.3.4	Natural Phenomena	40
4.3.5	Other Phenomena	48
4.4	Operational Controls	49
5.0	REGULATORY ANALYSIS	49
5.1	No Significant Hazards Determination	49
6.0	ENVIRONMENTAL EVALUATION	52
7.0	REFERENCES	52

LIST OF FIGURES

Figure	Title
1	Transfer Cask, Cask Transport Frame, and Rail System
2	Cask Washdown Area Restraint
3	Transfer Cask Impact Limiter
4	Transfer Cask Removal From the Cask Transport Frame, Showing Yoke and Tension Links
5	Fuel Handling Building Crane Features
6	Spent Fuel Pool Frame
7	Cask Transfer Frame Impact Limiter
8	Heavy Load Handling Paths for the Transfer Cask/MPC
9	Heavy Load Handling Paths for the Transfer Cask/MPC
10	Heavy Load Handling Paths for the Transporter and Transfer Cask/MPC

DESCRIPTION AND ASSESSMENT

1.0 INTRODUCTION

1.1 OVERVIEW

This license amendment request (LAR) submits, for Nuclear Regulatory Commission (NRC) review and approval, changes in the implementation of the Diablo Canyon Power Plant (DCPP) Control of Heavy Loads Program and other analyses, design and procedure changes required to implement a dry cask Independent Spent Fuel Storage Installation (ISFSI). This LAR submittal is in accordance with recommendations in NRC Bulletin 96-02 (Reference 7.1), Item 2.

Collectively, these changes will allow the use of Holtec International's (Holtec's) multi-purpose canisters (MPCs), HI-TRAC transfer cask, and associated equipment in the DCPP 10 CFR 50 facilities.

By PG&E letter dated December 21, 2001 (Reference 7.2), Pacific Gas and Electric Company (PG&E) submitted an application to the NRC requesting a site-specific license for an ISFSI at DCPP, in accordance with 10 CFR 72. The ISFSI will use Holtec's HI-STORM 100 System. Approval of this LAR is necessary to implement the Diablo Canyon ISFSI.

This LAR describes the dry cask-related activities to be performed in the DCPP 10 CFR 50 licensed facilities along with other cask transport activities that could potentially affect the 10 CFR 50 facilities. The fuel handling building/auxiliary building (FHB/AB) is the location in which most of the 10 CFR 50 dry cask-related activities take place. However, the more general term "10 CFR 50 facilities" is used herein to include these buildings and other structures, systems, and components (SSCs) associated with the DCPP 10 CFR 50 licensed facility that could either affect or be affected by the ISFSI activities.

1.2 FINAL SAFETY ANALYSIS REPORT (FSAR) UPDATE

Changes to the DCPP FSAR Update (Reference 7.3) will be processed upon approval of this LAR and completion of appropriate plant changes.

2.0 DESCRIPTION

No changes to the DCPP Operating Licenses or Technical Specifications (TS) are required. The applicable details (such as the "spent fuel cask exclusion zone") were previously relocated from the TS to the FSAR Update in accordance with License Amendments (LAs) 135/135 for DCPP Units 1 and 2 (Reference 7.4).

2.1 CASK HANDLING PROCEDURES

DCPP procedures and the DCPP FSAR Update will be modified to eliminate the spent fuel cask exclusion zone.

The elimination of the spent fuel cask exclusion zone will allow use of Holtec's 125-ton transfer cask, containing an MPC for storing spent fuel assemblies, fuel debris, and other authorized nonfuel-related hardware, in the DCPP 10 CFR 50 facilities, including the cask recess area in the spent fuel pool (SFP).

The DCPP FSAR Update and previous heavy loads submittals described a 67-1/2 ton cask. In accordance with the recommendations of NRC Bulletin 96-02, PG&E is submitting this LAR for NRC review and approval, since the analyses for a 125-ton cask demonstrating that the associated licensing criteria remain satisfied have not been previously approved by the NRC.

2.2 OTHER MODIFICATIONS AND PROCEDURE CHANGES

In addition, the DCPP FSAR Update, DCPP procedures, and other affected documents will be revised to incorporate key modifications and procedure changes. These changes will be necessary to handle, load, drain, dry, backfill with helium, and seal the MPC while within the transfer cask, before it leaves the FHB/AB. The changes will include:

- Crane and procedure modifications to preclude certain drops or events that could lead to an uncontrolled off-center drop, cask tip-over, and damage to fuel within or outside of the SFP;

- Adjustment of redundant electrical interlocks (limit switches) on the FHB crane to allow cask movement over the cask recess area of the SFP but prevent travel or potential load drops over spent fuel storage racks;

- Incorporation of new SFP and FHB/AB restraint structures and use of impact limiters to ensure the spent fuel, MPC, transfer cask, and 10 CFR 50 structures meet 10 CFR 50 and 10 CFR 72 requirements;

- Shoring of existing structural elements;

- Adjustment of boron concentration in the SFP during MPC loading or unloading operations in accordance with the proposed Diablo Canyon ISFSI TS; and

- Fire protection procedure modifications to ensure that cask and MPC fire design considerations, defined in the analyses described in the Diablo Canyon ISFSI Safety Analysis Report (SAR) (Reference 7.5), are appropriately addressed.

These modifications are described generally herein and will be implemented in subsequent design and procedures changes. These changes will be performed in accordance with the change-control programs described in the DCPP FSAR Update, thereby ensuring that the SSCs and relevant procedures meet applicable requirements and commitments. Use of the transfer cask and other changes beyond currently approved licensing basis will be implemented upon approval of this LAR.

2.3 ACCIDENT ANALYSES REVISIONS AND UPDATES

The accident analyses and associated descriptions in the DCPP FSAR Update will also be revised to evaluate spent fuel cask movement impacts on the 10 CFR 50 facilities. The revisions will include a description of key features and changes necessary so the analyses demonstrate the potentially affected 10 CFR 50 facilities, the fuel, the MPC, and transfer cask remain within their respective licensing bases.

3.0 BACKGROUND

3.1 GENERAL

DCPP was designed with the understanding that spent fuel would be loaded into shipping casks and shipped to an offsite reprocessing or storage facility. The fully-loaded shipping cask was expected to weigh approximately 67-1/2 tons and is depicted in the DCPP FSAR Update and NUREG-0612 submittals (Reference 7.6). However, during the licensing of high-density spent fuel racks in 1987 (LAs 22/21, Reference 7.7), there was a lack of sufficient information about the DCPP shipping casks such that a complete analysis to support use of shipping casks could not be performed. As a result, the DCPP licensing basis was modified to preclude the use of a shipping cask in the SFP when any spent fuel assemblies were present in the part of the SFP where they might be damaged if the cask were to drop. Also, DCPP's FHB crane was not single-failure proof, as defined by NUREG-0612, Section 5.1.6. This resulted in the designation of a "spent fuel cask exclusion zone" in the SFP adjacent to the cask recess area.

PG&E also indicated in its May 13, 1996, response to NRC Bulletin 96-02 (PG&E Letter DCL-96-111, Reference 7.8) that it had no current plans for handling heavy loads or shipping casks over spent fuel, but that it would evaluate any such activities in accordance with 10 CFR 50.59 and, as appropriate, obtain prior NRC approval.

With the implementation of the Diablo Canyon ISFSI project and the selection of Holtec's HI-STORM 100 cask storage system to transfer and store the spent fuel at the Diablo Canyon ISFSI, PG&E now has the requisite information to prepare the required design changes and procedures and to perform the necessary evaluations for making these changes as described in this LAR.

The proposed Diablo Canyon ISFSI includes the following major SSCs:

- ISFSI storage pad,
- Onsite cask transfer facility (CTF),
- Cask transporter, and
- Dry cask storage system.

The Holtec HI-STORM 100 System has been certified by the NRC for use by general licensees as well as site-specific licensees. Refer to NRC Certificate of Compliance (CoC) No. 1014, May 1, 2000 (Reference 7.9).

The HI-STORM 100 System is comprised of the MPC, the storage overpack, and the transfer cask. The design and operation of these components are further described in the following sections and in Section 1.5 of the HI-STORM 100 System FSAR, Revision 0, July 2000 (Reference 7.10). In addition, Holtec has proposed a number of changes to the generically-certified HI-STORM 100 System in its LAR 1014-1, Revision 2, July 2001, including Supplements 1 through 4 dated August 17, 2001; October 5, 2001; October 12, 2001; and October 19, 2001; respectively, which were submitted to the NRC for review and approval (Reference 7.11). Several of the proposed changes in LAR 1014-1 are proposed for licensing of the Diablo Canyon ISFSI.

The Diablo Canyon ISFSI storage pad is designed to hold up to 140 storage casks (138 casks plus 2 spare locations). Based on the current fuel strategy and use of the MPC-32, the ISFSI storage pad capacity will be capable of storing the spent fuel generated by DCPP Units 1 and 2 over the term of the current operating licenses (2021 and 2025, respectively). Because of its higher capacity, the principal MPC planned to be used will be the MPC-32. In addition, to accommodate spent fuel generated during the licensed period, as well as any damaged fuel assemblies, debris, and nonfuel hardware, PG&E may use three other MPC designs from the HI-STORM 100 System: the MPC-24, MPC-24E, and MPC-24EF. All four MPC designs use the same storage overpack and are either licensed by current CoC No. 1014 or will be licensed upon NRC approval of LAR 1014-1. These MPC designs will accommodate most of the DCPP-specific fuel characteristics.

PG&E's 10 CFR 72 application incorporates these designs in a preferred cask system licensing approach as follows:

- The initial Diablo Canyon ISFSI license would incorporate the MPC capabilities as specified in Holtec CoC No. 1014, as proposed to be amended in the Holtec LAR 1014-1. While the MPC capabilities covered by the Holtec CoC No. 1014 and LAR 1014-1 will not completely envelope all of the spent fuel characteristics eventually needed for DCPP spent fuel, they will cover most of the current SFP inventory and will permit the storage of much of the spent fuel and associated nonfuel hardware generated through the license term.

- MPC designs needed for the balance of DCPP's spent fuel characteristics will be addressed in future revisions to the Holtec CoC. As these changes are submitted by Holtec and approved by the NRC, PG&E will amend the Diablo Canyon ISFSI license to incorporate these changes. The resulting capability will provide PG&E with the flexibility to store onsite all the spent fuel and nonfuel hardware from DCPP Units 1 and 2 generated during the term of its operating licenses.

A summary of the loading and unloading operations, as described in the Diablo Canyon ISFSI SAR, Sections 4.4 and 5.1, is provided below.

3.2 TRANSFER CASK/MPC LOADING PROCESS

Upon arrival onsite, the transfer cask is removed from the delivery vehicle, inspected, cleaned as necessary, and upended to the vertical position with a lifting device such as a mobile crane. The bottom (SFP) lid is bolted to the bottom flange and the transfer cask is declared ready for use. The transfer cask top lid is removed and the empty MPC is lifted and placed inside the transfer cask using the four lift lugs welded to the inside of the shell. The combined empty MPC and transfer cask assemblage is then attached to the cask transport frame, downended to the horizontal orientation, and moved to the rear of the FHB/AB with the cask transporter, whose lifting devices have been designed, fabricated, operated, inspected, maintained, and tested in accordance with NUREG-0612 guidance. It is then moved into the FHB/AB through the roll-up door on the east side of the building, on the transport frame/rail dolly. Outdoor lifts of nonfuel bearing components may be performed with suitably designed, commercial-grade lifting and rigging equipment, well away from the safety-related 10 CFR 50 SSCs.

Assembly of the transfer cask/MPC components may also be performed in the FHB/AB, but the transfer cask and contained parts of the assembly are always handled with the cask transport frame and cask transporter when near or being moved into the FHB/AB.

Once in the FHB/AB, a lift yoke, custom designed for compatibility with both the FHB crane and the transfer-cask lifting trunnions as well as SFP water chemistry, is used to upright the transfer cask and MPC while in the cask transport frame.

The transfer cask is detached from the cask transport frame. The transfer cask is then moved to the cask washdown area (CWA) using the FHB crane. While in the FHB/AB, the transfer cask and cask transport frame are restrained by a rail system, a CWA area restraint, a SFP frame, or attachment to the FHB crane, as appropriate, to preclude unanalyzed movements or tip-over. The rail system and CWA restraint are depicted in Figures 1 and 2. While in the CWA, an impact limiter (Figure 3) is attached to the transfer cask using the bolt holes in the outermost bottom flange that were used to attach the bottom of the transfer cask to the cask transport frame. The impact limiter is designed to limit cask deceleration to within the design-basis limit of 45 g and to protect the FHB/AB under a postulated drop event. The cask is then placed on the floor, the lift yoke is disconnected, and the cask system is prepared for movement to the SFP.

The annulus between the transfer cask and the MPC is filled with non-contaminated water (borated as necessary to match or exceed the MPC water concentration as described below). An inflatable annulus seal is installed to prevent contamination of the outer MPC shell while it is submerged in the SFP. The MPC is then filled with water of the proper boron concentration, as required by the proposed Diablo Canyon ISFSI TS, according to the enrichment level of the fuel to be loaded and the MPC model used. Four guide bumper assemblies are attached to the top and bottom plates of the transfer cask. The lift yoke is reconnected and the transfer cask, which contains an MPC filled with water, is lifted above the SFP wall. An auxiliary lift (Figure 5), as described in Section 4.2.1, provides a redundant load path between the crane trolley and the yoke. The cask is then traversed over the SFP wall into position over the cask recess area of the SFP and the SFP frame (Figure 6). The transfer cask water jacket remains empty to minimize the lifted weight of the cask.

The annulus overpressure system is attached. The transfer cask is lowered until the lower guide bumper assemblies are fully engaged in the SFP frame. The auxiliary lift is detached and the cask lowered in the SFP frame until it is resting on the bottom of the cask recess area of the SFP. The SFP frame guides the cask to the bottom of the SFP cask recess area, precluding tipping or damage to adjacent fuel storage racks. The SFP frame limits the amount of horizontal travel the cask could experience in a seismic event and transfers loads to the SFP walls, thereby limiting loads on the 10 CFR 50 structures and the cask and its contents within their respective design bases. The annulus overpressure system is a defense-in-depth measure to ensure that any breach of the annulus seal or bottom lid seal will force leakage of clean borated water

into the SFP, and ensures contaminated SFP water will not enter the annulus. The lift yoke is disconnected and the selected fuel assemblies are loaded into the MPC in accordance with plant procedures.

The drain line is attached to the MPC lid and, after fuel loading is complete, the MPC lid is lowered into position on top of the MPC lift lugs and the lid retention stops are engaged. The lift yoke is attached to the transfer cask, the cask is lifted out of the SFP, and the annulus overpressure system is disconnected. Before moving the transfer cask out of the SFP frame, the auxiliary lift is reattached providing the redundant load path between the crane trolley and yoke. The auxiliary lift provides redundant drop protection during the lift out of the frame and during lateral crane movement, which precludes the need to postulate a drop event between the SFP and the CWA. After arriving above the CWA, the auxiliary lift is detached to allow downward vertical load movement.

The loaded transfer cask and MPC are lowered to the CWA inside the CWA seismic restraint structure, and the cask is decontaminated. Water is added to the water jacket (this water may be unborated since it is contained within a separate pressure boundary and there is no potential for it to mix with the water in the MPC). The water jacket provides neutron shielding and replaces the shielding lost when the water in the MPC is drained.

The water level in the MPC is lowered slightly, and the MPC lid is welded to the MPC shell using the automated welding system (AWS). Welding is expected to take three to four passes. Liquid penetrant examinations will be performed on the root and final passes and after approximately one-half of the total weld thickness is made.

After MPC lid welding is complete, the water in the MPC is raised again and a hydro test is performed. Upon successful hydrostatic test completion, the MPC is drained of a small amount of water and a helium blanket is applied between the top of the water and the MPC lid. Helium leak testing is performed in accordance with ANSI N14.5-97 (Reference 7.12) to meet the acceptance criterion in the Diablo Canyon ISFSI SAR, Section10.2.

Performance of the helium leak testing at this time allows detection of any leakage through the lid-to-shell weld before the MPC is drained of water. This sequence of activities allows the neutron shielding provided by the water in the MPC to be retained as long as possible in the loading process.

After successful helium leak testing, the MPC is completely drained of water using the MPC blowdown system. The remaining water is removed through evaporation using a vacuum drying system (as the pressure in the MPC is reduced, the saturation temperature for the water is reduced, causing evaporation of residual water) or a forced helium dehydration (FHD) system

(required for high burnup fuel). The Diablo Canyon ISFSI SAR, Section 10.2, specifies the dryness acceptance criteria for both methods of drying. After meeting the drying acceptance criteria, the MPC is backfilled with 99.995 percent pure helium, as required by the Diablo Canyon ISFSI SAR, Section 10.2.

When the MPC has been satisfactorily drained, dried, backfilled with helium, and the lid-to-shell weld has been leak tested, the MPC vent and drain port cover plates are welded on, inspected, and leak tested in accordance with ANSI N14.5-97. Then, the MPC closure ring is installed and welded. The inner diameter of the closure ring is welded to the MPC lid, and the outer diameter is welded to the top of the MPC shell.

The MPC lift cleats are attached to the MPC lid, and the MPC is now ready for transfer to storage. The transfer cask top lid is installed. The impact limiter is unbolted from the bottom of the transfer cask, and the lift yoke is re-engaged with the transfer cask-lifting trunnions. The bolts attaching the impact limiter are removed. The FHB crane is used to lift the loaded transfer cask to a height sufficient to detach the impact limiter from the transfer cask, and the crane auxiliary lift is attached (the transfer cask remains directly above the impact limiter until the auxiliary lift is operable). The seismic restraint system in the CWA is then opened. The height to which the transfer cask is lifted is carefully controlled to be equal to the height of the cask transport frame base plus a minimal clearance needed to move the cask onto the cask transport frame base. The transfer cask is then moved laterally to the cask transport frame, which is staged nearby in the upright position. The transfer cask is attached to the cask transport frame, and the cask transport frame stabilizer is removed. An impact limiter (Figure 7) is positioned to protect the loaded transfer cask and to protect the FHB/AB in case of a crane load-handling equipment failure. After the crane auxiliary lift is detached, as the loaded transfer cask and cask transport frame are lowered to just above the impact limiter, the impact limiter is removed from the downending path to allow completion of the downending operation for movement outside the FHB/AB.

The cask transport frame is moved out of the FHB/AB on rails to a position beyond the vital water storage tanks, where it is rigged to the cask transporter. The frame and rail system have been designed and analyzed to ensure no adverse impacts on the 10 CFR 50 facilities or the cask and contents, as described in Section 4.3.4. When outside the FHB/AB, the underground utilities and structures will be evaluated and temporarily reinforced with steel plates, cribbing, and/or shoring as necessary to handle the load from the loaded cask transporter or cask transporter frame with cask, as appropriate.

Outside the FHB/AB, the loaded transfer cask and cask transport frame are rigged to the cask transporter and moved to the CTF in the horizontal position. These evolutions and the cask transport system design, including associated

lifting components, are described in more detail in the Diablo Canyon ISFSI SAR. As discussed in the Diablo Canyon ISFSI SAR, the cask transporter is seismically qualified and has been analyzed for possible interaction with the 10 CFR 50 facilities while on the transportation route. The analysis shows it will remain on the roadway and not overturn, thus it has no impact on the 10 CFR 50 facilities. These analyses are further discussed in Section 4.3.4.

3.3 UNLOADING OPERATIONS

While unlikely, certain conditions, as discussed in the Diablo Canyon ISFSI SAR, may require unloading the fuel assembles from the transfer cask/MPC.

The unloading process is generally the reverse order of the loading processing. The following is a description of those activities that are unique to the unloading process.

The transfer cask and its enclosed MPC are returned to the CWA, and the MPC stays, MPC lift cleats, and transfer cask top lid are removed. The annulus is filled with borated water. The annulus shield is installed to protect the annulus from debris produced from the lid removal process. Similarly, the transfer cask top surfaces are covered with a protective fire-retarding blanket.

The MPC closure ring and vent and drain port cover plates are core drilled. Local ventilation is established around the MPC ports. Remote valve operator assemblies are attached to the vent and drain ports. The valves allow access to the inner cavity of the MPC while providing a hermetic seal. The MPC is cooled using a closed-loop heat exchanger to reduce the MPC internal temperature to allow water flooding. Following the fuel cool-down, the MPC is flooded with borated water. The MPC lid-to-MPC shell weld is removed. Then, weld removal equipment is removed with the MPC lid left in place.

The inflatable annulus seal is installed and pressurized. The MPC lid is rigged to the lift yoke, and the lift yoke is engaged to the transfer cask lifting trunnions. The transfer cask is moved into the SFP cask recess area. There, the MPC lid is removed. All fuel assemblies are returned to the spent fuel storage racks, and the MPC fuel cells are vacuumed to remove any assembly debris. Reversing the lift and transfer process, the transfer cask and now defueled MPC are returned to the CWA, where the MPC water is pumped back into the SFP. The annulus water is drained, and the MPC and transfer cask are decontaminated.

4.0 TECHNICAL ANALYSIS

4.1 DESCRIPTION OF THE ISFSI COMPONENTS

As discussed in the Diablo Canyon ISFSI license application, PG&E has selected the Holtec HI-STORM 100 System for the Diablo Canyon ISFSI. The HI-STORM 100 System is described in the HI-STORM 100 CoC No. 1014. Holtec has proposed revisions to the CoC in LAR 1014-1, Revision 2, dated July, 2001, and Supplements 1 through 4. The HI-STORM 100 System design and operational considerations that are pertinent to this LAR are described below.

The HI-STORM 100 System is comprised of three components: an MPC, a transfer cask, and a storage overpack. The MPC and transfer cask, used within the 10 CFR 50 facilities, are further described below.

4.1.1 HI-STORM 100 Interchangeable MPCs

The MPC contains pressurized water reactor (PWR) fuel assemblies, debris, and other nonfuel hardware. It is a welded cylindrical canister with a honeycombed fuel basket, a baseplate, a lid, a closure ring, and the canister shell. It is made entirely of stainless steel, except for the Boral neutron absorbers and an aluminum washer in the vent and drain ports. The canister shell, baseplate, lid, vent and drain port cover plates, and closure ring are the main confinement boundary components. The honeycomb basket, which is equipped with Boral neutron absorbers, provides criticality control.

There are several types of MPCs, including several variations of MPC-24s, which hold up to 24 PWR fuel assemblies and related nonfuel hardware. The MPC-32 holds up to 32 PWR fuel assemblies and related nonfuel hardware. Proper selection of an MPC allows for storage of intact damaged fuel assemblies and debris. All MPCs have the same outside dimensions and use the same transfer cask.

4.1.2 HI-TRAC Transfer Cask

The transfer cask contains the MPC during loading, unloading, and transfer operations. It provides shielding and structural protection of the MPC from the SFP to the CTF. The transfer cask is a multi-walled (carbon steel/lead/carbon steel) cylindrical vessel with a built-in exterior water jacket. Diablo Canyon will use the HI-TRAC 125D design, modified to add bumpers and guide plates for interface with the SFP frame (Figure 6). The maximum weight including the lifting yoke during any loading, unloading, or transfer operation does not exceed 125 tons.

4.2 DESIGN AND OPERATIONAL CONSIDERATIONS

4.2.1 Fuel Handling Building Crane Auxiliary Lift and Control

The 128-ton rated auxiliary lift is a lifting beam suspended from two 100-ton screw jacks supported by a removable beam pinned to a yoke assembly pinned to the main hoist top block of the crane trolley. The bottom portion of the lift is removable from the crane during periods when not needed for dry cask storage system load handling operations.

The main hoist of the crane carries the load at all times and is seismically qualified for all DCPP earthquakes at full-rated load (125 tons). The auxiliary lift is a redundant load-handling component, designed to the same codes and standards as the crane. The auxiliary lift retains and holds the load from the main hoist upon failure of the main hoist system. The transfer of the load from the main hoist to the auxiliary lift is an abnormal load handling condition and therefore does not require seismic qualification. The auxiliary lift is capable of limited vertical lifting or lowering of the retained load to place the load in a safe configuration while the main hoist is restored to service.

The auxiliary lift receives loading from the main hoist system (hook load plus reeving) upon loss of the main hoist load path (load transfer) during specific load handling operations with the cask. In order to limit impact loading on the auxiliary lift during load transfer, the lift vertically adjusts its position to follow the vertical travel of the main hoist hook and bottom block. Vertical position of the auxiliary lift is controlled by processing of inputs from the crane main hoist drivetrain and load measurement, and auxiliary lift screw jack drivetrain and load measurement.

Since the auxiliary lift is located between the main hoist bottom block and the bottom of the crane trolley, physical contact with the main hoist bottom block is precluded by limiting the maximum travel height of the main hoist bottom block, and the maximum lowering limit of the auxiliary lift using the above controlling inputs. Upper travel limits of both the main hoist and the auxiliary lift use redundant and diverse devices to preclude damage from overtravel.

The rigging components between the auxiliary lift and transfer cask lifting yoke are designed to double the factor of safety normally applied to rigging for a load handling operation resulting in a ten-to-one factor of safety. This rigging is also designed to limit excessive vertical travel during load transfer to control impact loading on the lift.

In addition to the redundant load handling provided by the auxiliary lift, the crane control system will be upgraded. These upgrades will include:

- Addition of infinitely variable speed control for each motive function of the crane (bridge, trolley, and hoists),

- Addition of programmable controls for the operating logic of the crane and its interface with the auxiliary lift, providing safer crane operation by using diverse output measurements from the crane components as input to perform real-time monitoring and control of the machinery. The main hoist will be upgraded to include measurement of hook load and a variable speed motor controller that allows loading of the system to be monitored and controlled by comparing output from a load cell in the hoist load path with expected versus actual hoist motor current. A mismatch will cause the hoist system to stop safely and provide appropriate indication to the crane operator. The motor controls will also be programmed with limits to ensure that subcomponents of the machinery are not subjected to demands beyond their inherent design values (e.g., limiting motor output torque to match the maximum drivetrain gearbox rating, or "soft" motor start-ups to reduce dynamic loading on the drivetrain).

4.2.2 Heavy Load Requirements

DCPP's Control of Heavy Loads Program, which includes revisions for loading the HI-STORM 100 System components within the 10 CFR 50 facility, is discussed below.

(a) NUREG-0612, Section 5.1.1, General

(1) <u>Safe load paths</u>

Heavy load paths have been reviewed and will be revised to incorporate the movement of the cask system.

An added load path in the receiving/shipping area is for the upending and downending of the transfer cask on the cask transport frame so that the transfer cask assembly on the cask transport frame may pass through the FHB/AB roll-up door. The remaining load paths for other new heavy loads inside the FHB/AB are enveloped under previous load path "B," as shown in Figure 9. The load path in the receiving/shipping area and the location of the seismic restraint structure in the CWA use the slab and the wall beneath the floor slab to absorb energy from a postulated drop of the transfer cask during selected load handling operations.

Through the heavy loads program, DCPP has taken steps to preclude heavy load drops during the transfer cask/MPC handling. However, should a load drop occur not withstanding these measures, the paths have been chosen to avoid drops where a load drop would result in damage to equipment required for safe shutdown or decay heat removal. In addition to the procedures described below, redundant electrical interlocks are provided to ensure the crane does not move outside of the analyzed load path and into a position where the cask could drop onto the fuel assemblies in storage racks in the SFP.

Further, as discussed in Section 4.3.1, the paths have been analyzed to ensure the structures and transfer cask/MPC would withstand any potential impacts from credible drops.

In order to protect the loaded dry cask system and its ancillaries during cask operations, an exclusion area over these components when operating will be required such that only those heavy load handling operations necessary by dry cask system design (e.g., AWS placement, shielding placement, transfer cask lid or storage cask lid placement, unloaded transfer cask lifting yoke or storage cask lifting device placement) are allowed over the system. Figure 10 depicts the new cask transport load path and exclusion areas at the CTF and ISFSI pad.

Based on the above information, PG&E believes its commitments to NUREG-0612, Section 5.1.1 (1), are met.

(2) Procedures

PG&E procedures covering the handling of heavy loads will be revised to address the transfer cask and related heavy load lifts and handling within the 10 CFR 50 facility, in accordance with PG&E's program requirements.

The heavy loads procedures used to handle plant heavy loads are contained in maintenance procedures. Implementation of the HI-STORM 100 System will be in accordance with plant design control procedures, which require review and updating of all applicable procedures, including the maintenance procedures, to reflect all the necessary details to ensure safe load handling for the HI-STORM 100 System loads.

The existing procedures are comprehensive with respect to load handling exclusion areas, equipment required, inspection and acceptance criteria before load movement, and steps/sequence to be

followed during the load movement, as well as safe load paths (as described above), and special precautions. Procedures implementing the DCPP Control of Heavy Loads Program require changes to be approved by the Plant Staff Review Committee.

Changes required through the application of the PG&E design and procedure change control processes will ensure that an adequate level of detail is maintained for the new loads to be handled, assuring PG&E meets its commitments to NUREG-0612, Section 5.1.1 (2).

(3) Crane Operators

PG&E personnel require training and qualification for the tasks they perform, including crane operations. This training and qualification meets the requirements of ANSI B30.2-1976 (Reference 7.13). Existing crane operator qualification training will be reviewed and augmented with storage system load handling practices, as applicable, to ensure compliance with NUREG-0612, Section 5.1.1(3), commitments.

(4) Special lifting devices

Special lifting devices will be used to lift the transfer cask/MPC, and include the transfer cask lifting yoke assembly, which couples the transfer cask/MPC to the FHB crane and the auxiliary lift. These devices have been, or will be, designed and constructed to ensure compliance with PG&E commitments to NUREG-0612, Section 5.1.1 (4).

(5) General lifting devices

General lifting devices will be selected, procured where needed, and installed in accordance with the requirements of the DCPP Control of Heavy Loads Program, which incorporates the guidance of ASME (formerly ANSI) B30.9. The basis for selecting the sling rated capacity includes the sum of the static and maximum dynamic load. In accordance with NUREG-0612, when selecting the proper sling, loads imposed by the Safe Shutdown Earthquake need not be included in the dynamic loads imposed on the sling or lifting device. Hence, compliance with PG&E commitments to the guidance provided in NUREG-0612, Section 5.1.1 (5), lifting devices that are not specially designed, is ensured.

(6) Crane inspection, testing, and maintenance

DCPP's maintenance program meets the requirements of Chapter 2-2 of ANSI B30.2-1976 and NUREG-0612, Section 5.1.1 (6). The additional load handling systems for dry cask operation will be added and controlled under the DCPP maintenance program.

(7) Crane design

PG&E previously described the crane design and qualification in its December 5, 1984, NUREG-0612 submittal (Reference 7.14), and that description remains generally appropriate. The crane was procured before NUREG-0612 was issued, but it is consistent with the intent of the ANSI/CMAA specifications, as described and accepted in the previously referenced submittal. In addition, the FHB crane will be modified to increase its load handling reliability and redundancy, as discussed in Section 4.2.1. Hence, PG&E meets the commitments to NUREG-0612, Section 5.1.1 (7).

In summary, PG&E's commitments to NUREG-0612, Section 5.1.1 guidance, will be met by the PG&E design and associated maintenance and operating procedures as implemented for dry cask storage through plant change control processes.

4.2.3 Structural Design

Structural design of the storage system components used within the DCPP 10 CFR 50 facilities, and interfacing plant structures, meets or envelopes the design criteria for those facilities, including the load combinations and allowables and associated spectra for the four DCPP licensing seismic events [design earthquake (DE), double-design earthquake (DDE), Hosgri earthquake (HE), and long term seismic program (LTSP) earthquake].

The Holtec transfer cask and MPCs are designed to withstand the above seismic events. The design of the SFP frame (Figure 6), the FHB crane (Figures 4 and 5), the CWA restraint structure (Figure 2), and the cask transport frame and rail system in the receiving/shipping area (Figure 1), ensures there will be no unexpected movements or unacceptable impacts or loads on the cask system or the associated structures. Impact limiters (Figures 3 and 7) are used during lifts described in Section 4.3.1 to ensure loaded casks and affected structures are not unacceptably affected by drops.

Holtec analyses show the transfer cask, MPC, and contained fuel assemblies meet requirements in the most limiting conditions. Holtec analyses also define the loads on the 10 CFR 50 structures created by the transfer cask and MPC during credible events. PG&E analyses provide input to the Holtec analyses

and demonstrate the adequacy of the affected structures during the analyzed events and accidents discussed in the following sections of the technical analysis and hence during normal operations as well.

The effects of the weight of the cask assembly and cask transport frame have been evaluated on the following exterior structures:

- The east exterior wall – The wall has been judged adequate with respect to lateral earth pressures related to the surcharge loads associated with movement of the cask assembly and cask transport frame outside of the building at elevation 115 ft.

- Vital water tank piping vault - Evaluation of the lateral earth pressure/surcharge loading effects on the vital water tank piping vaults below grade, east of the AB. Initial assessment indicates a need for more detailed evaluation and/or analyses, and possibly shoring. The analysis, and design of shoring if required, will be performed in accordance with current DCPP licensing-basis criteria and methodology, as the remainder of the above work.

In addition, potential seismically-induced interactions between non-seismically designed SSCs (sources) and safe shutdown SSCs (targets) will be identified. Those not already analyzed to demonstrate stability during a seismic event will be evaluated in accordance with PG&E's Seismically Induced System Interaction Program, as accepted by the NRC in SSER 11 (Reference 7.15), to ensure they will not adversely affect any safety-related SSCs. In addition, the important-to-safety and safety-related equipment (e.g., the loaded transfer cask) will be evaluated as seismic-interaction targets to ensure there are no unacceptable consequences from other sources during a seismic event.

4.2.4 Thermal Design

The thermal design of the SFP and FHB have been evaluated to ensure that the introduction of the transfer cask/MPC, its loading, and its removal have no adverse effect on the SFP thermal hydraulic licensing basis, the SFP area temperature licensing basis established in DCPP reracking LAs 22/21, or the FHB HVAC system licensing basis. Analyses demonstrate that the introduction and use of the loaded transfer cask have no effect on the thermal environment. The following thermal parameters involved remain within their licensing bases:

- SFP bulk temperatures,

- time-to-boil,

- local water and fuel cladding temperatures in the SFP, and

- FHB area temperature.

Impact on SFP bulk temperature

For the current DCPP thermal-hydraulic licensing bases, the SFP thermal capacitance is conservatively assumed to be the capacitance of the SFP net water volume only. The current DCPP licensing-basis calculation specifies that the SFP net water volume was conservatively assumed to equal 90 percent of the SFP gross volume

To assess the effect of the transfer cask on the SFP thermal capacity, a calculation of the net water volume with a transfer cask placed in the cask recess area was performed. Instead of the simplified 90 percent assumption from the previous analysis, the calculation uses actual fuel volumes and rack weights to determine the water displaced by those items. The transfer cask is conservatively modeled as a solid cylinder, neglecting the open design of its top lid. The calculated SFP net water volume exceeds the values used for the current DCPP licensing-basis evaluations, so the placement of a transfer cask in the SFP does not reduce the thermal capacitance below that credited in the current DCPP licensing basis. Therefore, there is no effect on the current DCPP licensing-basis SFP bulk temperatures that result from placing the transfer cask in the SFP.

Impact on Time-to-Boil

Placement of a transfer cask into the SFP will not affect either the SFP thermal capacity assumed in the current licensing-basis analysis as discussed above or the decay heat load. Therefore, the SFP heatup rate will not be increased by placement of the transfer cask in the cask recess area and the current licensing basis on time-to-boil is maintained.

Impact on Local Water and Fuel Cladding Temperature in the SFP

In the original DCPP licensing-basis analysis, the SFP was modeled as an axisymmetric cylinder with an annular downcomer at its outer periphery. The annular downcomer was assumed to be 4 inches wide, which is conservative since there is a 5.18-inch wide minimum rack-to-wall gap along each wall. The large open cask recess area was not credited in the downcomer width calculation, so placing a transfer cask into the cask recess area could not affect the conservatism of the 4-inch wide assumption that forms the DCPP licensing basis. Additionally, all spent fuel storage racks are greater than 9 inches from the edge of the cask recess area, so placing a transfer cask into the cask recess area will not create any localized downcomer constriction.

Local temperatures for fuel assemblies loaded into the transfer cask will not exceed the maximum values that constitute the SFP licensing basis. The

current DCPP licensing-basis local temperatures correspond to fuel assemblies with cooling times of 136 to 155 hours. The minimum cooling time for loading fuel into a transfer cask is 5 years, at which time the maximum assembly decay heat is much lower.

In summary, there is no mechanism by which placement of a transfer cask into the cask recess area can increase the local water and fuel cladding temperatures above those levels that form the SFP licensing basis.

Impact of Fuel Handling Building Area Temperature

A calculation was performed to add a new heat load of 28.74 kW from dry cask operation to the building heat load. The SFP area ambient temperature will increase by approximately 3°F and the FHB HVAC filter room ambient temperature will increase by approximately 2.4°F. The resulting temperature will be below the maximum design temperature of 104°F for the area.

Spent fuel cladding temperatures during MPC loading, drying, and evacuating activities are addressed in the Diablo Canyon ISFSI SAR and the HI-STORM 100 System FSAR, as amended by Holtec LAR 1014-1.

4.2.5 Radiological Assessment

Diablo Canyon ISFSI SAR, Chapter 7, provides information regarding the radiation protection design features of the ISFSI and the estimated onsite and offsite doses expected due to operation of the Diablo Canyon ISFSI. The generic shielding analyses including methodology, computer codes and modeling were performed in accordance with NUREG-1536 (Reference 7.16). Diablo Canyon ISFSI SAR, Tables 7.4-1 and 7.4-2, provides the estimated occupational exposures during the loading and any potential unloading activities. The dose rates used for this analysis were conservatively estimated using design-basis fuel. DCPP radiation protection personnel will perform the appropriate radiation monitoring. PG&E's policy is to perform all operations in a manner consistent with as low as is reasonably achievable practices.

4.2.6 Water Chemistry Considerations

The boron concentration in the SFP, MPC, and transfer cask/MPC annulus will be maintained in accordance with the proposed Diablo Canyon ISFSI TS during MPC loading/unloading operations. For an MPC-32 with one or more fuel assemblies having an initial enrichment of greater than 4.1 and less than or equal to 5.0 wt-percent U-235, boron concentration must be greater than 2,600 ppm. The SFP boron concentration to meet 10 CFR 50 requirements is the greater of 2,000 ppm or the concentration specified in the current DCPP Core Operating License Report during refueling outages. A discussion of the acceptability of boron concentrations up to 3,000 ppm is provided as follows:

Boration Considerations

During cask loading and unloading operations, borated water will be used in the MPC and MPC–transfer cask annulus, at levels of up to 3,000 ppm. The effect of this higher concentration on the plant has been evaluated, and determined to be acceptable, as described below.

The higher boron concentration will have no adverse effects on the thermal or materials performance of the SFP and the racks. The higher boron concentration will have no unacceptable adverse effects on the thermal or materials performance of the SFP cooling system. All components in contact with the pool water are made of austenitic stainless steel and will not be affected, with the exception of a limited number of replaceable commodities such as pump seals, where normal maintenance practices will mitigate expected increased wear.

The SFP water purification system clarifies, purifies, and demineralizes water from the SFP. The SFP demineralizer is a mixed-bed resin unit designed to provide adequate SFP water quality through a mixed-bed cation and anion resin ion-exchange process. The resin trap filter functions to contain resin beads from the demineralizer to prevent their migration into the SFP system.

During normal operation, the boron in the SFP will remain in solution and pass through the SFP demineralizer and filter. There is no effect on the SFP filter and mixed bed resins. After the MPC welding and helium filling operations are complete, SFP boron concentration may be returned to normal operating concentration.

During refueling operations (Mode 6), the reactor cavity is filled with water from the refueling water storage tank (RWST). The RWST has a DCPP TS limitation of boron concentration of greater than 2,300 ppm and less than 2,500 ppm during normal operations (Mode 1 - 4) to meet accident analysis assumptions. For dry cask loading, which is performed between refuelings, the SFP boron concentration may be raised, depending on the fuel being loaded, to 3,000 ppm. During refueling operations, some limited mixing of the SFP and reactor cavity water will occur due to the communication between the SFP and reactor cavity through the fuel transfer tube. If the SFP boron concentration is at a higher level during refueling, there will be a slight increase in RWST boron concentration. Current operational procedures require verification that the RWST concentration is within the DCPP TS requirements before exiting Mode 5. Therefore, current DCPP procedures assure that there will be no unacceptable impacts on the RWST boron concentration from higher boron concentration in the SFP.

The effect of the higher boron concentrations on the fuel was also evaluated. Stress corrosion cracking of austenitic stainless steel is a concern on fuel integrity in a low pH environment. Both Westinghouse and EPRI have provided water chemistry criteria to preclude unacceptable effects on the systems or the fuel assemblies. PG&E procedures ensure these guidelines are followed. Based on the Westinghouse guidelines, increasing the boron concentration from 2,000 to 3,000 ppm will decrease the SFP pH from 4.57 to 4.33 (without lithium). The minimum DCPP pH (limit based on Westinghouse criteria) is 4.1. Therefore, even with a 3,000 ppm boron concentration, DCPP SFP water chemistry criteria will continue to be satisfied, and neither the system nor the fuel will be unduly affected.

The Holtec transfer cask, MPC, and other components used in the SFP are designed to prevent chemical reactions between the materials and the SFP water. The MPC is constructed entirely of austenitic stainless steel and Boral (boron carbide and aluminum) and two aluminum washers in the valves.

The Boral is passivated prior to use, and any continuing passivation reactions will not result in significant hydrogen production. The aluminum washers represent a very small amount of aluminum (less than 10 ounces, total), and are part of the MPC lid, so they are only briefly exposed to the borated water. Hence, they are inconsequential from a water chemistry viewpoint. There are no coatings of any kind on the interior surfaces of the MPC.

The transfer cask is constructed from the following materials: carbon steels; elemental lead; Holtite-A neutron shield material; paint; and brass, bronze, or stainless steel appurtenances (pressure relief valves, drain tubes, etc.). Exposed surfaces of the transfer cask are coated with an epoxy-based coating material that has been demonstrated not to react with the borated SFP water (reference Appendix A of the Diablo Canyon ISFSI SAR).

As a result of these design considerations and PG&E's satisfactory experience with existing SFP materials and clarity, no clarity or chemistry problems are expected.

4.2.7 Criticality

Criticality Prevention

No changes are proposed in this LAR that would adversely affect the criticality analysis of spent fuel stored in the spent fuel racks or being handled within the SFP. 10 CFR 72.124 provides the applicable regulatory requirements for spent fuel once it is inside the transfer cask/MPC.

Multiple Holtec analyses envelop operating conditions for the range of fuel enrichments and basket designs being used for DCPP. The most limiting

conditions are for 32 assemblies with fuel enriched up to 5 percent in the most reactive configuration in an MPC-32. The analyses assume zero burnup and 75 percent credit for the Boral plates in the MPC basket, in accordance with NUREG-1536.

The NRC has approved the criticality analyses, as described in the HI-STORM 100 System FSAR, through the issuance of CoC No. 1014. This approval is for the use of MPC-24s "for general use by holders of 10 CFR 50 licenses for nuclear reactors at reactor sites under the general license issued pursuant to 10 CFR 72.210, subject to the conditions specified by 10 CFR 72.212, and the attached Appendix A and Appendix B."

Holtec's LAR 1014-1 extends the analyses to cover MPC-32s and most of the fuel and nonfuel hardware used at DCPP. The proposed Diablo Canyon ISFSI SAR, Section 10.2, specifies allowed fuel and nonfuel hardware, which may be loaded into an MPC. The criticality analyses, performed on the transfer cask and contents, used the three-dimensional Monte Carlo code MCNP4A with independent confirmation by NITAWL KENO5A from the SCALE-4.3 package. The analyses and associated codes are described in detail in the HI-STORM 100 System FSAR and LAR 1014-1.

The LAR 1014-1 analyses credit up to 2,600 ppm of boron in the MPC water, for fuel with higher enrichments in MPC-32s. The required level of boron is between 1,900 and 2,600 ppm for approved contents in an MPC-32 and from 0 to 400 ppm boron for approved contents in an MPC-24, -24E, or -24EF, as described in the HI-STORM 100 System FSAR and LAR 1014-1. The appropriate boron concentration at DCPP will be ensured by using the required boron concentration in the MPC in accordance with the proposed Diablo Canyon ISFSI TS and filling the annulus between the MPC and the transfer cask with borated water of similar concentration. Proposed Diablo Canyon ISFSI TS 3.2.1 requires a boron concentration of 2,000 ppm for all fuel loaded into any MPC type except for fuel assemblies with enrichments greater than 4.1 and less than or equal to 5.0 wt-percent U-235, loaded into MPC-32s, which requires 2,600 ppm minimum boron concentration.

The above analyses have been performed in accordance with 10 CFR 72 requirements and cover all conditions for fuel within the transfer cask/MPC.

The results of the criticality analyses of different fuel types are shown in Chapter 6 of the HI-STORM 100 System FSAR, as amended by LAR 1014-1, for the MPC-24, -24E, -24EF, and -32. The results confirm that the maximum multiplication factors of the MPCs are below the design criteria (k_{eff} less than 0.95) for fuels with specified maximum allowable enrichments up to 5 percent U-235, considering calculation uncertainties. The PWR fuel types for which these analyses were performed are shown in Table 2.1.3 of the

HI-STORM 100 System FSAR. With the exception of DCPP fuel assemblies with annular fuel pellets and Zirlo clad fuel with burnup greater than 45,000 MWD/MTU, all DCPP fuel is bounded by array/classes 17x17A and 17x17B. No credit is taken for neutron poison in the fuel pellets or in the integral fuel burnable absorber rods, therefore, fuel assemblies containing these poisons provide additional margin to criticality and are acceptable for loading.

Section 6.4.4 of the HI-STORM 100 System FSAR, as amended by Holtec LAR 1014-1, discusses the results of criticality analyses on MPCs that contain damaged fuel in a Holtec damaged fuel container. Analyses were performed for three possible scenarios. The scenarios are:

- Lost or missing fuel rods, calculated for various numbers of missing rods in order to determine the maximum reactivity addition.

- A broken fuel assembly with the upper segments falling into the lower segment creating a close-packed array. For conservatism, the array was assumed to retain the same length as the original fuel assemblies.

- Fuel pellets lost from the assembly and forming powdered fuel dispersed through a volume equivalent to the height of the original fuel, with the flow channel and cladding material assumed to disappear.

Results of these analyses confirm that, in all cases, the maximum reactivity addition for the HI-STORM 100 System with design-basis failed fuel in the most adverse post-accident condition will maintain k_{eff} well below the regulatory limit of 0.95 with fuel enriched up to 5 percent U-235.

Criticality Monitoring

10 CFR 50.68, 10 CFR 70.24, and 10 CFR 72.124(c) require criticality monitoring.

Criticality is not credible during the fuel handling for the MPC loading and sealing process because of the following design or procedural requirements during the process:

- The MPC is specifically designed to preclude criticality, both during dry storage and during wet loading. In order to ensure sub-criticality during the most reactive conditions and fuel loads, the MPC water is borated in accordance with the proposed Diablo Canyon ISFSI TS.

- Loss of water is not a concern from a criticality viewpoint as it reduces k_{eff}.

- The MPC lid and the transfer cask lid are in place before the transfer cask/MPC assembly is lifted out of the SFP, and there is no credible mechanism to introduce any significant amount of water into the MPC, hence dilution is not credible.

- Rinsing of exterior transfer cask surfaces is performed as the transfer cask emerges from the SFP. Procedural controls are relied upon during the rinsing process to ensure an inadvertent dilution does not occur.

- Multiple procedural steps, including independent checking and verification, ensure fuel loading according to a plan that is developed in accordance with the requirements and limitations defined by the criticality design of the MPC.

Radiation monitoring around the SFP is provided by radiation monitors R-58 and R-59. Monitoring in the CWA will be provided by a portable monitor in conjunction with R-59.

In summary, analysis provides suitable loading plans that preclude criticality by spacing and fixed neutron absorption within the MPC and basket. Multiple checks during loading ensure the fuel loaded meets the requirements of the analysis. During wet loading/unloading operations, boron is provided in the MPC in accordance with the proposed Diablo Canyon ISFSI TS requirement, for which there is no credible dilution mechanism. Therefore, a criticality event is not credible, and PG&E requests exemption from the requirements to provide criticality monitoring in accordance with 10 CFR 50.68, 10 CFR 70.24, or 10 CFR 72.124(c). Additional details regarding this exemption request are provided in Enclosure 2 of this LAR.

4.3 Accidents and Events Evaluated

This evaluation addresses the spent fuel handling process, including spent fuel loading, unloading if required, and handling activities that take place in, or that could impact, DCPP's 10 CFR 50 facilities.

The following evaluations examine the postulated off-normal events and accidents, demonstrating that the consequences of these events remain within the current DCPP licensing-basis criteria as identified in the DCPP FSAR Update. The event, methodology, acceptance criteria, and results are discussed for each event.

4.3.1 Drops and Tipovers

The transfer cask, MPC and its internals, MPC lids, the transfer cask bottom shield, transfer cask lids, impact limiter, the lift yoke, and spent fuel assemblies represent loads, which must be handled in the vicinity of the SFP and spent

fuel (in the SFP and in the MPC itself). With the exception of individual spent fuel assemblies themselves, they all represent heavy loads.

The potential for drops of any of these loads is extremely small, due to DCPP's Control of Heavy Loads Program and fuel-handling operations procedures. DCPP's Control of Heavy Loads Program, which provides procedures, training, and design that minimizes the potential for load drops, meets PG&E's commitments to NUREG-0612 and has been accepted by the NRC. This program, as enhanced for application to dry cask load handling operations, is described above in Section 4.2.1.1.

Nonetheless, potential heavy-load drops are postulated, evaluated, and analyzed where credible, in accordance with the guidance of NUREG-0612, Section 5.1, demonstrating defense-in-depth.

(a) Loaded Transfer Cask Drops

PG&E has provided defense-in-depth through the crane enhancements in those locations where a drop could have unacceptable consequences. Specifically, the design of the auxiliary lift ensures that an uncontrolled drop onto the edge of the SFP wall, which could allow the cask to tip or tumble horizontally into the SFP or into the CWA, is not credible. The only point in the load path where this could occur is near the top of the vertical lift out of the SFP frame where the bottom bumper guide assemblies emerge from the top of the frame structure, and during the horizontal traverse from above the cask recess area in the SFP to over the washdown area, (or vice versa). In order to preclude the possibility of this occurring, crane enhancements as described in Section 4.2.1 will be provided.

Therefore, potential for load drops is eliminated, during the above horizontal traverses and during small adjustments in vertical position (as required to lift the cask above the SFP frame, or remove the impact limiter, or place the cask system onto the transport frame). The crane enhancements also preclude drops during the horizontal traverse from the CWA to the transport frame in the receiving/shipping area, and the placement of the transfer cask/MPC into the transport frame.

The storage system design and operating procedures preclude lifts, and hence heavy load drops, at other points during transfer cask/MPC movement within the 10 CFR 50 facilities. Further, movement over fuel in the SFP, or over any other safe shutdown systems or equipment identified in PG&E's NUREG-0612 submittals, is precluded by procedures and the design of the crane system and/or travel limit devices.

However, in three lifts during the transfer cask/MPC movement, greater vertical travel is required, and the redundant load path provided by the auxiliary lift is not available. In these cases, PG&E meets NUREG-0612 guidance to provide defense-in-depth by the design of impact limiters and drop analyses, in the unlikely event of a transfer cask/MPC drop during these three lifts.

There is a potential for load drops during three lifts. These lifts are: (1) a drop into the cask recess area of the SFP; (2) a drop onto the CWA; and (3) a drop or tipover when the transfer cask/MPC is being upended or downended on the cask transport frame, onto the AB floor, in the receiving/shipping area. Each of these drops is discussed below. Collectively, they bound any transfer cask/MPC drop that could occur.

To determine the consequences of the vertical drop event, a finite element analysis for the vertical drop of a loaded HI-TRAC 125D transfer cask is performed with the Holtec QA validated computer code LS-DYNA.

The model includes a detailed articulation of the concentric shells, lead, and upper and lower end plates that comprise the HI-TRAC 125D structure. The loaded MPC, contained inside the overpack, is similarly modeled with a sufficient number of finite elements to enable a clear definition of the deformation of the confinement boundary, including the closure welds. The impact limiter is defined by a suitable material and geometry to reflect the impact limiter characteristics. This model has been used for emulating various similar fuel and cask drop events in the HI-STORM 100 System FSAR.

1. Drop Into the CWA

This evaluation considers the drop of a loaded transfer cask and MPC from the highest point in the lift (at approximate elevation 141 ft- 6 inches) to the floor in the CWA (at approximate elevation 115 ft).

Holtec analyses, which rely upon the use of the impact limiter (Figure 3), demonstrate that the drop of the transfer cask and MPC will not cause any of the following:

- stresses in the transfer cask, MPC, or basket, which exceed the allowables established in the HI-STORM 100 System FSAR for load handling accidents

- loss of fuel-cladding integrity due to exceeding allowable acceleration limits established in the HI-STORM 100 System FSAR for load-handling accidents

- fuel criticality (k_{eff} greater than 0.95 for fuel in the MPC)
- overheating of fuel in the MPC
- loss of retrievability of fuel in the MPC
- exposure to MPC contents by lid opening
- loss of shielding function due to unacceptable lead slump
- loss of shielding function beyond the dose for analyzed loss of shielding accident in HI-STORM 100 System FSAR

To protect the 10 CFR 50 structure and the contents of the transfer cask from a cask drop event, the bottom of the transfer cask is equipped with an impact limiter (Figure 3).

The impact limiter, intended to mitigate the consequences of a vertical drop of the transfer cask in the FHB/AB, is designed utilizing the test data from the dynamic characterization of an AL-STAR impact limiter certified in Docket No. 71-9261. The method of analysis is based on the correlations developed in the HI-STAR 100 transport certification program. The solution methodology is identical to that discussed in the HI-STAR SAR.

The impact limiter is adequate to satisfy all performance requirements to ensure the safety of the spent nuclear fuel contained within the MPC and transfer cask. Therefore, there are no radiological consequences for such a drop with intact fuel. For damaged fuel and fuel debris, the radiological consequences were evaluated and determined to be enveloped by the existing fuel assembly drop accident, as described in Section 15.5.22.1 of the DCPP FSAR Update, and accepted by the NRC in the DCPP Safety Evaluation Report (SER) (Reference 7.17).

The peak forces transmitted to the floor slab of the CWA provide design input for analysis of the floor slab and slab support structure in the CWA.

The following results are obtained from the finite element analysis of the post-impact event.

- The maximum Von Mises stress in the MPC enclosure vessel is approximately one-third of the allowable stress intensity per the HI-STORM 100 System FSAR.

- The maximum Von Mises stress in the body of the overpack is less than one-third of the allowable stress intensity per the HI-STORM 100 System FSAR.

- The maximum downward movement of the annular lead column relative to the transfer cask shells is well below the value demonstrated to be acceptable.

- The vertical drop event produces no change in the fuel geometry in the fuel basket.

- The overall geometry of the overpack and the MPC remains unaltered.

PG&E analyses provide input to the Holtec analyses and demonstrate the adequacy of the affected structures during the postulated drop, demonstrating that the drop will not cause:

- loss of building structural function, or

- unacceptable damage to other systems or equipment.

A removable cask seismic restraint structure keeps the cask from tipping over in any conditions that could be encountered while the cask is resting in the CWA. The cask restraint structure is designed as a safety-related structure.

Collectively, these analyses demonstrate that there are no unacceptable consequences from a drop of the transfer cask and MPC in the loaded or unloaded condition in the CWA. Hence the guidelines for a drop analysis in NUREG-0612, Appendix A, are met, providing defense-in-depth assurance in addition to that achieved through compliance with PG&E's commitment to NUREG-0612, Section 5.1.1.

One exception is consideration (1) of Appendix A, "that the load is dropped in an orientation that causes the most severe consequences." This was considered, but is not applied in the drop analyses; the DCPP CWA seismic restraint and event sequence ensure the cask will remain upright at impact. Analyses confirm initial tipping will be small and will not affect the overall drop or impact analyses.

2. <u>Drops Into the cask recess area</u>

The evaluation considers the drop of a loaded transfer cask from highest point in the lift (approximate elevation of cask bottom is 140 ft) to the bottom of the cask recess area in the SFP. This drop bounds the unloaded case as well. This drop is similar to the drop into the CWA,

except that there is water to slow the cask and the postulated drop is longer.

Holtec analyses, which rely upon the use of impact limiters (Figures 3 and 7), demonstrate that the drop of the transfer cask and MPC will not cause any of the following:

- stresses in the transfer cask, MPC, or basket, which exceed the allowables established in the HI-STORM 100 System FSAR for load handling accidents
- loss of fuel cladding integrity due to exceeding allowable acceleration limits established in the HI-STORM 100 System FSAR for load handling accidents
- fuel criticality (k_{eff} greater than 0.95 for fuel in the MPC)
- overheating of spent fuel in the MPC
- loss of retrievability of fuel in the MPC

The postulated drop into the SFP consists of 4.67 ft in air followed by 42.83 ft in water. For the vertical drop over the SFP, the effects of buoyant force, fluid drag, and hydrodynamic mass are included and reduce the maximum impact. Also included is an analysis that demonstrates that deviations from a straight vertical drop are negligible even under the most conservative input moment tending to rotate the cask as it enters the water. The limiting vertical drop over the SFP cask recess area results in a slightly (5.8 percent) higher deceleration than that for the drop over the CWA.

The impact limiter is adequate to satisfy all performance requirements to ensure the safety of the spent nuclear fuel contained within the MPC and transfer cask. Therefore, there are no radiological consequences for such a drop with intact fuel. For damaged fuel and fuel debris, the radiological consequences were evaluated and determined to be enveloped by the existing fuel assembly drop accident, as described in Section 15.5.22.1 of the DCPP FSAR Update, and accepted by the NRC in the DCPP SER.

The PG&E analysis provides input to the Holtec cask-drop analyses and demonstrates the adequacy of the affected structures during the postulated drop, demonstrating that the drop will not cause:

- loss of building structural function,
- damage to the SFP resulting in loss of SFP water, or
- unacceptable damage to other systems or equipment.

The SFP frame (Figure 6) precludes cask tipover while the cask is resting on the bottom of the cask recess area, and it also ensures the cask remains upright in the event of an accidental fall into the SFP during a lift. The SFP frame is designed in accordance with requirements for safety-related structures as further discussed in Section 4.3.4.

Collectively, these analyses demonstrate that there are no unacceptable consequences from a drop of the transfer cask with an MPC in the loaded or unloaded condition. Hence the guidelines for a drop analysis in NUREG-0612, Appendix A, are met, providing defense-in-depth assurance in addition to that achieved through compliance with PG&E's commitments to NUREG-0612, Section 5.1.1.

One exception is consideration (1) of Appendix A, "that the load is dropped in an orientation that causes the most severe consequences." This was considered, but is not applied in the drop analyses; the DCPP SFP frame ensures the cask will remain upright at impact, as discussed above. Analyses confirm initial tipping will be small and will not affect the overall drop or impact analyses.

3. Drop or Tipover onto the AB Floor During Downending

Subsequent to operations in the CWA, the impact limiter is removed from the bottom of the transfer cask and supplementary shielding added (part of the cask transport frame). It has been demonstrated that the transfer cask and MPC can withstand vertical drops up to 7 inches, without unacceptable effects. Since the maximum lift above the floor in the CWA and above the bottom shield of the cask transport frame in the receiving/shipping area is greater than 7 inches, a drop was postulated during this evaluation. An analysis of a vertical drop of the loaded transfer cask, without impact limiter protection, is performed using the dynamic finite element code LS-DYNA to establish the upper bound on the lift height.

When the loaded cask is inserted into the cask transport frame and subsequently made ready for the downending from the vertical to

horizontal orientation, the FHB crane is supporting the cask/frame and the redundant load path provided by the auxiliary lift is not available. Hence, in the event of a crane failure, the cask and its contents are subject to a tipover. Prior to initiating any downending/upending operation, an impact limiter (Figure 7) is positioned on the concrete floor slab to ensure that in the event of a tipover or drop, there are no unacceptable consequences. The impact velocity associated with the tipover event is used as an input to a dynamic finite element model of the cask plus contents and the upending/downending frame.

The following results are obtained from the LS-DYNA finite element analysis of the post-impact event:

- The maximum Von Mises stress in the MPC enclosure vessel is approximately one-third of the allowable stress intensity per the HI-STORM 100 System FSAR.

- The maximum Von Mises stress in the body of the overpack is approximately one-half of the allowable stress intensity per the HI-STORM 100 System FSAR.

- The maximum deceleration experienced by the fuel at the top of the fuel assemblies is less than the 60 g design limit discussed in the HI-STORM 100 System FSAR.

- The tipover event produces no change in the fuel geometry in the fuel basket.

- The overall geometry of the overpack and the MPC remain unaltered so that fuel can be removed from the unit after the event, if necessary.

- There is no overheating of spent fuel in the MPC.

- Shielding function is maintained.

PG&E analyses provide input to the Holtec analyses (allowable tipover location). Impact forces from the Holtec analysis were used to demonstrate the adequacy of the affected structures during the postulated tipover, demonstrating that the tipover will not cause:

- loss of building structural function, or

- unacceptable damage to other systems or equipment.

Collectively, these analyses demonstrate that there are no unacceptable consequences from a tipover of the transfer cask and MPC in the loaded

or unloaded condition. Hence the guidelines for a drop analysis in NUREG-0612, Appendix A, are met, providing defense-in-depth assurance in addition to that achieved through compliance with PG&E's commitment to NUREG-0612, Section 5.1.1.

4. Drop Before Loading MPC

The last area considered is a potential drop of the empty (without fuel assemblies) transfer cask with or without the MPC, and other components. Some receipt inspection and assembly activities may be performed well away from the 10 CFR 50 power block facilities, where a load drop could not result in damage to equipment required for safe shutdown or decay heat removal. The transfer cask will be moved to the east of the FHB/AB using the special-purpose cask transporter and handled as described elsewhere herein. Thus, the potential for drops of the empty transfer cask assembly are enveloped by the fully loaded evaluations and analyses described herein.

The potential for drops of the lighter components (e.g., the empty MPC, its lid, the transfer cask top lid, welding system, etc.) up to and including the MPC and lid assembly, which weigh approximately 20 tons, will be minimized through DCPP's Control of Heavy Loads Program load-handling requirements. Analyses have shown that no heavy-load targets are affected in the unlikely event of such a drop in the CWA or the receiving/shipping area. Thus, the smaller individual sub-components of the dry cask storage system have been evaluated within the commitments of DCPP's Control of Heavy Load Program, and the results are satisfactory.

(b) Fuel Assembly Drop into Loaded Transfer Cask

PG&E's design and procedures provide approved equipment and practices for fuel assembly movements, which minimize the likelihood of an assembly damage or drop. Fuel assemblies are handled, by trained personnel, in accordance with approved procedures. The procedures incorporate the general criteria for fuel handling as described in Chapter 9 of the DCPP FSAR Update.

Implementation of fuel-handling system design is also discussed in Chapter 9 of the DCPP FSAR Update.

Because of the above design, fuel-handling procedures, and incorporation of operating experience from other facilities, the probability of a fuel assembly drop breaching the fuel cladding and releasing radioactive fission products is very small.

Nonetheless, a fuel assembly drop into a loaded transfer cask is postulated.

Criticality Considerations

While very unlikely, an assembly drop could result in physical deformation that would challenge the criticality margins provided by the fuel assembly and MPC basket structures.

The analysis of a fuel assembly drop onto a DCPP wet fuel storage rack was previously performed by Holtec, as a part of PG&E's ultra-high density fuel rack study in 1997. It demonstrates that the criticality margins continue to meet the licensing basis (k_{eff} less than 0.95). The previous analysis was reviewed for comparison against a postulated drop of a 3,000-lb fuel assembly with handling tool onto an MPC basket, and is bounding, as discussed below.

The previous analysis showed that, for a drop of 36 inches (the maximum handling height above the racks), the deformation of the top of the wet fuel storage racks would be localized and would not significantly affect the fuel geometry modeled in the criticality analysis. This analysis was compared to a hypothetical drop of the same fuel assembly from 56.5 inches (the maximum handling height of an assembly over the MPC) onto a Holtec PWR MPC basket. The wet rack fuel analysis is bounding for the dry storage MPC based on a comparison of the stiffnesses of the fuel-cell walls. The wet fuel rack cell walls are 0.1054 inch thick. The wall thickness of the MPC-24, -24E, and -24EF fuel cells is 0.3125 inch and the wall thickness of the MPC-32 fuel cell is 0.28125 inch. The 20.5 inch higher drop height for the MPC drop is more than compensated by the thicker MPC fuel-cell walls. Therefore, the wet rack analysis is bounding.

A fuel assembly drop into an MPC fuel storage location would not pose a criticality concern due to the thick steel baseplate of the MPC. No significant deformation of the MPC baseplate would occur, and the active fuel region of the fuel assembly would remain within the Boral neutron poison region of the fuel cell wall. Therefore, there is no impact on the criticality of a fuel assembly drop event.

The fuel spacers, which support the fuel assembly during storage and ensure the active fuel region remains adjacent to the Boral panels affixed to the fuel cell walls, have been evaluated for a fuel assembly drop. The fuel spacer support columns are designed to maintain integrity (that is, not buckle) during any design-basis cask drop event. The same design fuel spacers are used in the MPC in both the HI-STAR and HI-STORM systems. The limiting design-basis drop event for the fuel spacers occurs with the HI-STAR system, which has a design-basis g-load of 60 g. The

design-basis PWR fuel assembly weight of 1,680 lb, including nonfuel hardware, amplified by 60 g, results in a load of 100,800 lb on the fuel spacer columns. This bounds the load that would be imposed on the fuel spacer columns by the impact of a DCPP fuel assembly dropped through the SFP water into a fuel storage location in an MPC-32, MPC-24, MPC-24E, or MPC-24EF.

Radiological Considerations

The radiological evaluation assumes the fuel assembly drop into the open MPC results in mechanical damage to 264 fuel pins, which is equivalent to one fuel assembly.

The radiological consequences of a drop are limited by the ventilation system and radiation monitoring. Supply air for the SFP area is swept across the cask recess area and exhausted through the FHB ventilation system and then through the plant vent. An area radiation monitor is normally located on the spent fuel handling bridge crane during fuel handling operations. Permanent radiation monitors are located above the SFP (R-58) and the new fuel storage vault (R-59). Doors in the fuel handling area are closed to maintain controlled-leakage characteristics in the SFP region during refueling operations involving irradiated fuel. Should a fuel assembly be damaged and release radioactivity above a prescribed level, the radiation monitors on the crane and above the SFP will sound an alarm, and the SFP ventilation exhaust will be aligned to discharge through charcoal filters. This will remove most of the halogens released to the air above the SFP prior to discharging it to the atmosphere. If the radioactivity in the discharge is greater than the prescribed levels, detectors in the plant vent will alarm in the control room.

The current fuel-handling accident is described in Section 15.5.22.1 of the DCPP FSAR Update and is accepted by the NRC in the DCPP SER. This analysis models the fuel at 100 hours after reactor shutdown. In the case of an assembly drop into the MPC, the fuel has been discharged from the reactor for a minimum of 5 years. Therefore, the DCPP FSAR Update fuel-handling accident's radiological consequences envelope the radiological consequences for an assembly drop into an MPC.

(c) MPC or Transfer Cask Lids, AWS, or Lifting Yoke Drops into Loaded Transfer Cask

These components of the storage system (and combinations thereof), weigh more than 1,972 lb and are classified as heavy loads. However, their weight is substantially less than the 125-ton capacity of the main hoist or 15-ton capacity of the auxiliary hoist on the FHB crane. The handling of these items over fuel in the MPC is unavoidable. Defense-in-

depth is provided by lifting the lid using the 125-ton capacity main hoist transfer cask lifting yoke, with control enhancements as described in Section 4.2.1. Lighter components may also be lifted with the15-ton capacity auxiliary hoist. This provides safety factors greater than ten-to-one, such that drops of these loads are not considered credible.

4.3.2 Operational Errors and Mishandling Events

The proposed design of the dry cask handling system and associated procedures provide assurance that operational errors and mishandling events will not result in an increase in the probability or consequences of an accident previously analyzed. Operational errors and mishandling events are evaluated below.

(a) SFP Liner Breach Due to Cask Drop

Compliance with PG&E's accepted NUREG-0612 program provides a number of design and procedural controls that minimize the likelihood of cask or fuel assembly drops. In addition to these measures, and as part of the defense-in-depth approach defined by NUREG-0612, analyses of credible drops of the cask and a fuel assembly have also been performed, demonstrating all applicable criteria for the SFP structures, cask, MPC, and contained fuel are met.

While such drops are very unlikely, some are credible, as described above, and the potential exists to rupture the SFP liner. In addition, mishandling could result in damage to the liner. As discussed above in the section on drops into the SFP, cask recess area, structural integrity of the concrete forming the SFP is maintained, precluding any significant leakage. Any resulting leakage through the liner would be immediately evaluated following such an event by inspection of the SFP leak detection system. The leak detection line valves are normally closed, hence there will be no normal leakage flow. They are sampled weekly to verify liner integrity.

Such an event meets the criteria of the existing FSAR Update, Section 9.1.2.3.1, and would not result in exceeding the design or licensing bases of DCPP. Remedial action would be determined in accordance with plant event-response procedures.

(b) Crane Mishandling Operation with Transfer Cask/MPC Resulting in Horizontal Impact or Drops Outside of the Analyzed Lift Points

A crane mishandling operation was considered during horizontal movements of the crane while moving the transfer cask/MPC along its load path. It could be caused by control failures or operational errors.

Either is very unlikely because of administrative procedures, training, and other applicable provisions of PG&E's accepted NUREG-0612 program. As a heavy-load-handling crane, the FHB crane receives appropriate inspection, maintenance, and testing.

Movement into or over spent fuel, such that the load could damage the fuel storage racks or fuel assemblies in the SFP, is precluded by redundant electrical interlocks and the SFP frame. The interlocks are required to be tested by procedure prior to operations adjacent to the SFP. Horizontal and vertical load movement is performed slowly and is conducted only in a single-direction at a time (single-axis). Also, the operator has a diverse master shutdown switch, which, if activated, halts all crane motion if observations warrant. Crane operation procedures will require the travel limit switches for the gantry, trolley, hoist(s) and lift, and the diverse master shutdown switch to be tested once per shift. In addition, wire ropes and load holding brakes are also inspected once per shift. Should inadvertent crane movements occur, procedures and training ensure the operator will stop the crane's travel before an unintentional impact. Thus, horizontal and vertical mishandling impacts are precluded by implementation of DCPP's Control of Heavy Loads Program.

(c) Loss of the Transfer Cask Water Jacket Water During MPC and Cask-Handling Operations

After removal from the SFP, the transfer cask/MPC is handled to change its configuration and move it from the washdown area onto the cask transport frame in preparation for moving it outside onto the transporter. The likelihood of a drop or impact, which could affect the transfer cask's water jacket during these activities, is very low, due to the procedural controls and the design of the cask system that ensure that the structure is adequate to preclude any physical deformation. However, while very unlikely, the water jacket may be subject to damage and loss of the water. Should the water jacket be damaged in a handling accident, operational procedures will require an assessment of the radiological consequences and implementation of action appropriate to the situation subsequent to the assessment.

A bounding analysis in the Holtec HI-STORM 100 System FSAR, as amended by LAR 1014-1, demonstrates highest-expected dose rates at 1 meter of slightly over 1.3 rem/hr.

Doses to onsite personnel will be monitored after such an event, and temporary shielding may be employed at the discretion of the DCPP radiation protection organization.

(d) Boron Dilution of the SFP or MPC and Criticality Analyses

The SFP and the MPC rely on soluble boron in the water to meet criticality requirements during cask loading and before draindown. The required concentration is based on MPC type and is defined in the proposed Diablo Canyon ISFSI TS. SFP boron concentration requirements are specified in the DCPP TS as a minimum of 2,000 ppm boron. This concentration would be increased as required during loading and unloading operations, in accordance with plant procedures to ensure the MPC concentration remains within the proposed Diablo Canyon ISFSI TS limits.

Once proper boron concentrations are provided within the SFP and transfer cask/MPC, sources for potential dilution events are limited and controlled by the same measures used to control the SFP boron concentration at all times. Boron concentration changes in the shorter term, which would result in boron concentrations being reduced below the minimum proposed Diablo Canyon ISFSI TS requirements, are unlikely because of the large amount of water necessary, and would result in high level alarms and/or SFP overflow, detection, and correction.

Dilution sources that could affect the MPC concentration once the MPC is removed from the SFP are effectively limited to recirculation or addition of water to the MPC and are controlled by procedures. The procedures will ensure that any water added to, or recirculated through, the MPC is at a dissolved boron concentration greater than or equal to the minimum boron concentration specified in the proposed Diablo Canyon ISFSI TS.

In addition, the proposed Diablo Canyon ISFSI TS require verification of the boron concentration 8 hours prior to commencing fuel loading into the MPC and every 48 hours thereafter when the MPC is in the SFP or while water is in the MPC.

Given the limited sources, the procedural steps to prevent dilution of the water in the cask, and TS-required monitoring, dilution events are effectively precluded.

(e) Loading of an Unauthorized Fuel Assembly

The proposed Diablo Canyon ISFSI SAR specifies limiting values for the initial enrichment, burnup, decay heat, and cooling time after reactor discharge for the fuel assemblies to be placed into the MPCs. Specific storage locations are also required for regionalized fuel loading. The possibility of storing a fuel assembly that does not meet the Diablo Canyon ISFSI SAR has been considered.

However, loading of an unauthorized fuel assembly is not considered credible because of the multiple steps and independent verifications required for the two activities. These two activities are the loading design and the physical loading.

- Loading design is based on calculations that are performed in accordance with a design process that provides performance, checking, and independent verification by a third party. The MPC loading design procedures will prescribe how the planning is performed and verified to ensure the characteristics of selected fuel assemblies are within the applicable Diablo Canyon ISFSI SAR, Section 10.2, limits.

- Loading is performed in accordance with step-by-step procedures that require recording of each assembly's location with video or other means and independent verification of the actual fuel assembly numbers in each MPC location before the lid is placed on the MPC in the SFP. These procedures are part of the ISFSI operational procedures described in Section 9.4.1.1.4 and the operational controls described in Section 10.2 of the Diablo Canyon ISFSI SAR.

Finally, the loading of a fuel assembly with unexpected or unknown defects will not go undetected because fuel condition will be verified as part of the loading process.

As discussed above, the use of procedures ensures that only fuel assemblies meeting the Diablo Canyon ISFSI SAR requirements will be loaded for storage. As such, the loading of unauthorized fuel assemblies is not considered credible.

4.3.3 Support System Malfunctions

The proposed design of the dry cask system and handling system and the associated procedural controls provide assurance that support system malfunctions will not adversely affect plant safety. Support system malfunctions are evaluated below.

(a) Loss of Electrical Power or Component Failures During Handling Operations

Various failures of the welding system or draindown and drying systems can interrupt the process of welding the MPC lid and closures, dewatering, drying, backfilling with helium, and final sealing. Direct mechanical damage to the fuel, MPC, or transfer cask is not considered credible because of the limited mass and size of the associated equipment and because of the mechanical closure of the MPC with its lid. Seismic design

provisions ensure that the cask, MPC, lids, and fuel maintain their relative positions and are not susceptible to tipping or displacement during potential seismic events. However, interruption of the process during this period, because of power or equipment failure (such as loss of power to the FHB crane during a lift or to the welding machine during cask welding) will allow additional (beyond the expected) heat buildup and temperature rise.

Wet Transfer Operations

Operational controls are required to ensure that the water in the MPC is maintained below boiling during MPC closure operations in the CWA. In order to ensure that the boiling temperature is not approached, a conservative MPC-specific time-to-boil limit will be calculated, as described in the HI-STORM 100 System FSAR. The time limit will begin when the MPC lid is placed on the MPC after it has been loaded with spent fuel assemblies and will end when the MPC is drained of its water. If the time limit may be exceeded, forced water recirculation cooling will be initiated and maintained to remove the decay heat from the MPC cavity and allow calculation of a new time-to-boil limit. In order to provide time to restore electrical power, if lost, DCPP's procedural controls will reduce the calculated time-to-boil limit by 2 hours. This reduction of the time limit will ensure there will be ample time to restore power and initiate forced water recirculation.

Moisture Removal Operations

After the water is removed from the MPC [for moderate burnup fuel (less than 45,000 MWD/MTU)] and before the helium atmosphere has been established, water within the gap between the MPC and transfer cask is necessary to provide adequate heat transfer. As long as the annular gap water level is maintained and circulated, there is no time limitation for refilling the MPC with water or establishing an acceptable inert environment in the MPC.

Without water in the MPC, or recirculation of the annular gap water, and with a moderate burnup fuel load, there is a limit of 2 hours to reestablish an inert environment in the MPC or refill the MPC cavity with appropriately borated water.

For higher burnup fuel (greater than or equal to 45,000 MWD/MTU), which requires the use of a FHD system for drying, once the drying process is completed, a vacuum is established prior to filling with the proper grade of helium. When the vacuum exists, there is a limit of 2 hours to reestablish an inert environment in the MPC.

Normal and Contingency Procedures

Written procedures, together with personnel training and qualifications, provide assurance that wet transfer and moisture removal time limitations can be met under normal conditions.

In the event of a loss of power condition during fuel movement or canister load-handling activities, operating procedures for loss of power will include specific actions to restore power to the FHB crane, cask drying or cooling systems, as applicable. Power restoration will be accomplished by cross-connecting electrical buses up to and including vital diesel generator-backed power sources as plant operating conditions permit. This will provide the necessary power to complete movements and preclude overheating of the fuel in the MPC upon loss of power. Under station blackout conditions, DCPP, which is an alternate AC plant, will have a diesel generator available to provide power well within the MPC 2-hour time limit, so even in this unusual case, the MPC should be kept within its temperature limits.

In the event of other delays during loaded transfer cask/MPC activities in free air and before the MPC is sealed and filled with helium, procedures and equipment will ensure the ability to maintain the MPC and/or annulus water level and water circulation (as required for closure and sealing), thus assuring heat removal, until the cask preparation activities are completed. A final alternative is unloading of the transfer cask/MPC, as described in Section 3.3.

Final Configuration

After the MPC has been backfilled with helium and sealed, it is in the final configuration ready for transport, and bounded by thermal analyses for the transfer cask, which demonstrate that all criteria are satisfied, even if further events or delays occur.

(b) Rupture of MPC Dewatering, Vacuum, FHD, or Related Closure System Lines or Equipment

Two cases were considered for a rupture of a pressurized line: the discharge line during cask draindown while the MPC is being pumped dry, which results in a spill of contaminated water in the FHB/AB, and the FHD lines or equipment while drying the MPC, which could release airborne radioactivity to the FHB/AB atmosphere.

For the rupture of the discharge line during draindown, the evaluation assumes that the MPC is filled with water and no operator action is taken, which results in the entire water volume of the MPC (about

1,650 gallons) being pumped onto the FHB/AB floor. Most of the water would be captured by floor drains. Clean up of the remaining spilled water would be straightforward and not hazardous. The water would cause minimal exposure to workers.

In the case of failure of the FHD lines or equipment, minimal leakage would be expected due to the relatively low pressures, and again little exposure would be expected.

In either event, after termination of the leakage, and confirmation of acceptable radiological conditions, appropriate action would be taken to restore the integrity of the system and complete the process or return the loaded transfer cask to the SFP, dependent on the specific conditions. DCPP emergency procedures will provide for the evaluation of conditions in such events and for appropriate action based on the results of those evaluations.

From a radiological perspective, the consequences were evaluated and determined to be enveloped by the existing fuel assembly drop accident, as described in Section 15.5.22.1 of the DCPP FSAR Update and as accepted by the NRC in the DCPP SER.

(c) Failure of the Transport Frame/Rail Dolly or Crane Handling Systems

The cask transport frame is a simple, passive system, described in Section 4.3.2.4 of the Diablo Canyon ISFSI SAR. It has been structurally designed in accordance with the AISC Manual of Steel Construction. The frame and rail system, which guides the cask out of the FHB/AB, has been analyzed to ensure that it will continue to retain and support the cask system in the appropriate position, during all scenarios, including a seismic event. It has no other functions, and since the MPC is sealed, there are no other events that could cause system or plant criteria to be exceeded.

4.3.4 Natural Phenomena

(a) Seismic

The structural design criteria and the analyses methodology that demonstrates compliance with these criteria, for the SSCs involved in spent fuel storage and handling, remain the same as that described in detail in the DCPP FSAR Update. (One exception is the spatial load combination method used to determine seismic loads for the new SFP frame structure, which is discussed below.)

The potential impact of seismic events on cask loading, handling, closure, and transport activities has been considered in the evaluation of the cask system components and in the design and evaluation of the interfaces with 10 CFR 50 facilities. Two new structures, the SFP frame and the CWA seismic restraint structure, have been designed as described below. They preclude unacceptable movements of the cask system components, assuring all involved SSCs remain within their design bases.

The adequacy of the design for involved SSCs is demonstrated through analyses for all required loads, including seismic loads. Input motions from the DE, DDE, HE, and LTSP earthquake are considered.

The following conditions were analyzed to demonstrate conformance with the DCPP seismic licensing basis:

- A loaded transfer cask in the SFP frame (inside SFP)
- A loaded transfer cask suspended from the FHB Crane
- A loaded transfer cask in the CWA seismic restraint structure (located in the cask walkdown area)
- A loaded transfer cask on the cask transport frame (located in the cask receiving/shipping area and access area)
- A loaded/unloaded HI-TRAC on the cask transport frame being carried by the transporter on the transport route when it could potentially impact the power plant.

In order to ensure the transfer cask/MPC assembly cannot tip over and/or impact fuel or other parts of the SFP beyond their design-bases limits, the SFP frame (Figure 6) has been designed to enclose the transfer cask assembly, guide it during raising and lowering, and prevent unacceptable movement (swinging or tipping).

The CWA seismic restraint structure (Figure 2) has been designed to provide a seismic restraint and ensure the cask MPC assembly remains in an upright position and does not impact other safety-related structures or equipment during a seismic event.

The analyses supporting the design and confirming the adequacy of the involved SSCs was performed in a number of parts as described below.

Analyses Performed by PG&E

PG&E has performed analyses to provide the inputs for Holtec analyses described below and to demonstrate the acceptability of the SFP frame, the auxiliary lift, the FHB crane, and structural elements of the buildings for the loads imposed by the cask assembly, cask transport frame, SFP frame, and CWA cask seismic restraint.

The PG&E analysis of the existing building structures and the new structures inside the buildings use the DCPP licensing-basis load combinations, acceptance criteria, and methodology previously used in these buildings and similar structures at DCPP. One exception is the spatial load combination method used to determine seismic loads for the SFP frame structure, which is discussed below. The analyses use current industry standard software, including ANSYS and SAP 2000, which have been qualified in accordance with PG&E's QA Program.

SFP Frame Structural Design Calculations

Key calculations associated with PG&E's structural analysis of the SFP frame include:

(1) Stiffness development - Static analyses of the three-dimensional frame, using SAP 2000 to develop stiffnesses for use in the dynamic analyses.

(2) Cask system and frame dynamic analysis - Nonlinear dynamic analyses, based on a two-dimensional model of the frame, using adjusted stiffness to match that of the three-dimensional frame (from the stiffness development calculation). Analyses were performed for the four seismic events discussed above and four potential cask locations, utilizing the ANSYS computer program. Seismic input is based on the North/South and East/West time histories at elevation 140 ft of the FHB/AB. Results of these analyses provide the impact forces between the cask and frame and/or SFP walls.

(3) Three-dimensional static analysis for structural member sizing and support reactions - Static analyses of the three-dimensional SFP frame, using input from the above dynamic analyses and the computer program SAP 2000. Results of these analyses provide the member and connection forces and moments, and the frame reactions on the SFP walls and floor slab. Frame members are designed to meet the structural acceptance criteria applicable to safety-related structures.

As an exception to the standard seismic analysis methodology for DCPP, the spatial combination of the three component responses due to seismic input motions in the two horizontal and vertical directions is performed in accordance with the Newmark 100-40-40 method, instead of the standard square-root-of-the-sum-of-the-squares method, to determine the frame reactions and member stresses. The Newmark 100-40-40 method has previously been used by PG&E in the Hosgri evaluation of the Turbine Building, which was reviewed and accepted by the NRC Staff. In addition, this method has been endorsed by the NRC in a draft revision to Regulatory Guide 1.92.

(4) Structural detail design - Detailed design of joints, bumpers, supports, hinges, shimming, and splices. Input is based on member forces and moments, and support reaction loads developed in the three-dimensional static analyses discussed above.

(5) Elevation 140 ft restraint design - Design of restraints connecting the top of the frame and the top of the SFP concrete wall at elevation 140 ft to withstand lateral loads imposed by SFP frame and contained cask assembly during seismic events.

(6) Elevation 111 ft restraint design - Evaluation to demonstrate adequacy of existing cask restraint structure at elevation 111 ft in the SFP to withstand loads from SFP frame and contained cask assembly during seismic events. Minor modifications to the existing restraint structure are required to accommodate the SFP frame.

The following additional PG&E analyses have been performed to address the adequacy of the existing 10 CFR 50 facilities that will be subject to additional loads associated with the transfer cask/MPC assembly and associated equipment's use in the 10 CFR 50 facilities:

- FHB crane evaluation - An evaluation of structural elements of the FHB crane considering the additional loading associated with the new auxiliary lift designed to satisfy the redundant load path enhancement for the DCPP Control of Heavy Loads Program. This evaluation also provides reactions for use in the evaluation of the FHB steel superstructure.

- FHB steel superstructure evaluation - An evaluation of this steel frame structure for the reactions from the FHB crane with the suspended cask and redundant tension links.

- SFP floor evaluation - An evaluation of the floor of the SFP in the cask loading area for reactions from the SFP frame and loaded cask assembly.

- SFP wall evaluation - An evaluation of the SFP concrete walls for reactions from the SFP frame and CWA cask seismic restraint frame.

- AB floor and wall evaluations - An evaluation of the AB concrete floor slab at elevation 115 ft, and concrete walls between elevation 100 ft and 115 ft, for loads from the CWA cask seismic restraint frame, the cask assembly, and the cask transport frame while cask handling operations are being performed in the CWA, shipping and receiving area, and access area.

All existing structural elements continue to meet the applicable criteria for the event under consideration, with the exception of the floor slab at elevation 115 ft, which will require shoring in selected areas to support the weight of the cask assembly and cask transport frame.

Analyses Performed by Holtec

Holtec has performed analyses that demonstrated the adequacy of the cask system, inside the SFP frame, inside the CWA seismic restraint structure and on the cask transport frame while the cask system enters or exits the building. The analyses were performed with DE, DDE, HE and LTSP time histories. Holtec has also performed analyses which demonstrated the adequacy of the CWA seismic restraint structure, the hardware associated with crane handling activities, both inside and outside for the SFP, and the cask transporter frame/rail system.

Holtec performed dynamic simulations using the computer code VisualNastran 2001. Finite element analysis was performed using ANSYS 5.7, and the stiffness and stress analysis of the CWA frame structure was performed using "DR.Frame2.0" code. The software has been qualified by Holtec in accordance with their QA Program.

Holtec analyses are briefly summarized below:

- Dynamic simulations of the cask assembly were performed to demonstrate that the seismically-induced acceleration levels do not exceed the cask design basis and to develop the interface loads on the building floor slabs, walls, and cask seismic restraints that are attached to the building structure. These interface loads provided the input for evaluations of the structural integrity of the affected building components and seismic restraints.

These analyses demonstrated that peak accelerations for the cask and its contents remain well below 45 g. Therefore, the contained fuel remains intact and the stress levels in the cask and MPC remain below the design-basis levels as described in the HI-STORM 100 System FSAR.

- Static stress analyses of the CWA seismic restraint structure, including its anchorage to the building wall were performed, using loads from the dynamic simulations, to demonstrate compliance with the Diablo Canyon structural design criteria.

- During movement of the cask/cask transport frame out of the FHB/AB to the transporter, the cask and frame are in a relatively stable orientation because of their low combined center of gravity. In this configuration, the rollers, on the bottom of the cask transport frame, are in channels or "rails." The rails will be bolted to the floor or ground and will run outside the building to an area where the transporter can pick up the transfer cask/MPC. The cask transport frame/loaded cask is prevented from moving along the rails in a seismic event by the tow-in/tow-out cabling system that is used to move the cask/frame into and out of the building.

  The most limiting configuration occurs from a horizontal seismic event that is perpendicular to the direction of the rails. The horizontal seismic excitation oriented perpendicular to the rails will impose an overturning moment on the system. To calculate the floor reactions, Holtec used the computer code VisualNastran 2001. A dynamic analysis of the configuration was performed using the four design-basis earthquakes at elevation 115 ft. The dynamic analysis demonstrates that this loaded transfer cask will not tip over in a seismic event.

  As described in the Diablo Canyon ISFSI SAR, Section 8.2.1.2.1, the overturning or leaving the transport route of the transporter with a loaded transfer cask, on their way to the CTF, is judged to not be credible. Nonetheless, as a defense-in-depth measure, a transporter stability analysis was performed by Holtec, as described in Diablo Canyon ISFSI SAR, Section 8.2.1.2.1. This was a dynamic nonlinear sliding analysis that used bedrock ground accelerations and conservative transporter track to ground friction factors. This analysis is applicable to the transporter with a loaded transfer cask in the area immediately adjacent to the outside the FHB/AB and along the transport route above the power block (Figure 10). The transport route above the power block starts at about the point where the Unit 2, 500-kV lines cross the transport route to the ISFSI. The result of the analysis shows that the transporter will not overturn or leave the

transport route during a design-basis seismic event. Adequate clearance of the transporter to any safety-related 10 CFR 50 SSC will be maintained when it is located in the area immediately adjacent to the FHB/AB. This assures there is no possibility of seismically-induced damage to the 10 CFR 50 facilities from cask or transporter movement during such an event.

In conclusion, the PG&E analyses verify the continued compliance of the 10 CFR 50 facility with plant design criteria, with the additional loads imposed by the transfer cask/MPC system and associated components. The Holtec analyses demonstrate that the cask system and fuel contained therein complies with the structural design criteria described in the Diablo Canyon ISFSI SAR. In addition, they demonstrate the adequacy of the CWA restraint structure and the cask transport frame/rail system, and the cask transporter to preclude unacceptable movement or impact on the DCPP 10 CFR 50 facilities. The conditions analyzed envelope other possible configurations, such as an unloaded transfer cask/MPC, the lift to install the bottom lid, and downending of the transfer cask/MPC. Collectively, the design of the handling systems, buildings, and associated structures such as the above frames and restraints, ensures the storage system components and plant structures will continue to perform their important-to-safety and safety-related functions during any of the postulated seismic events.

(b) Tornado Winds and Tornado Missile Generated FSAR Update

A detailed discussion of the tornado wind and tornado generated missile evaluation for DCPP, including the FHB/AB, is given in Section 3.3.2 of the DCPP FSAR Update. The tornado-generated missile spectrum for DCPP (three hypothetical missiles) and the safe wind velocities associated with major structures and equipment, for both wind alone and wind combined with missiles, are also given in Section 3.3.2 of the DCPP FSAR Update.

The reinforced concrete AB, except for exterior doors and louvers, has a safe wind velocity of over 300 mph, for both wind alone and wind combined with missiles. The exterior concrete walls protect the building's contents from tornado effects.

The steel framed FHB has a safe wind velocity of 150 mph prior to partial loss of metal siding and roofing. After partial loss of siding, the steel frame has a safe-wind velocity of 260 mph for wind alone and 150 mph for wind combined with missiles. As indicated in DCPP FSAR, Section 3.3.2.3.2.3, the FHB purlins, girts, siding, roofing, and doors have the potential to become tornado generated missiles. However, these components do not produce missiles more severe than the three

hypothetical missiles. In addition, due to their low tornado resistance, the siding and roof are assumed not to provide protection of the building's contents from tornado winds or tornado missiles. Potential tornado targets inside the FHB are identified and evaluated in DCPP FSAR Update, Section 3.3.2.3.2.3.

The effects of tornado wind loads acting on the cask suspended from the FHB crane are enveloped by the seismic analysis of this configuration. Therefore, a separate evaluation for tornado loading is not required.

Use and handling of the cask assembly in the FHB/AB will introduce new tornado missile targets that have not been previously addressed in the original plant licensing basis. This includes the cask and cask handling equipment used during cask loading, purging, and closure activities inside the FHB/AB. The potential tornado effects during cask transport and storage are addressed in the 10 CFR 72 license application.

Further analysis shows that the mechanical loadings associated with a tornado do not jeopardize the integrity of the MPC considering the following failure mechanisms.

- Instability (tipover) due to tornado missile impact
- Stress in the cask induced by the lateral force due to tornado missile impact
- Loadings applied directly to the MPC or through cask openings
- Excessive deformation that could prevent retrievably of the MPC from the cask
- Excessive deformation that could reduce the shielding effectiveness

An analysis also shows that there is no loss of load due to a direct missile impact on the cask lift yoke while handling the transfer cask inside the FHB/AB. Hence, analysis results demonstrate that the 125-ton transfer cask satisfies all functional requirements under postulated impact scenarios and the system will not be subject to a loss of load due to a missile impact.

4.3.5 Other Phenomena

(a) Fires

The DCPP Fire Protection Program, as described in the DCPP FSAR Update, Section 9.5.1, provides the following major objectives:

- fire prevention,
- fire detection,
- fire abatement before significant damage occurs, and
- limited fire consequences, through maintenance of design features and suppression capability.

This program will be modified as appropriate to incorporate the requirements of the ISFSI fire analyses, as described in the Diablo Canyon ISFSI SAR, Section 8.2.5, such that the required controls are provided to ensure the plant and the ISFSI components remain within their licensing bases.

Inside the FHB/AB

The transporter and its associated fuel tank remain outside of the buildings. However, transient materials brought into the FHB/AB associated with dry cask storage activities could provide additional fire loading. These activities and materials are under the control of DCPP's Fire Protection Program. The current program will ensure that ignition sources are monitored and that combustible loading requirements for the FHB/AB areas are followed. To the extent practical, combustibles will be kept away from the transfer cask to minimize the effects of any potential fire.

Outside the FHB/AB

The existing Fire Protection Program will be modified to ensure potential fires during the transport and storage are handled consistently with the plant program requirements and meet the assumptions described in the Diablo Canyon ISFSI SAR, Section 8.2.5. Prior to any cask transport, a walkdown will be performed to ensure local combustible materials, including transient combustibles, are controlled in accordance with ISFSI fire protection requirements.

(b) No other phenomena or hazards apply to the cask system while inside the FHB/AB.

4.4 Operational Controls

Operations procedures and controls are employed to ensure that the assumptions in the technical evaluation and associated analyses are satisfied. The controls needed to meet the requirements within the 10 CFR 50 facilities are explained in detail in the proposed Diablo Canyon ISFSI TS and their bases and in Section 10.2 of the Diablo Canyon ISFSI SAR.

5.0 REGULATORY ANALYSIS

5.1 No Significant Hazards Determination

Pacific Gas and Electric (PG&E) Company has evaluated whether or not a significant hazards consideration is involved with the proposed changes by focusing on the three standards set forth in 10 CFR 50.92 as discussed below:

1. *Do the proposed changes involve a significant increase in the probability or consequences of an accident previously evaluated?*

   Response: No

   With the Holtec International (Holtec) HI-STORM 100 System and the associated design and handling procedures, most cask drops and other events, which could damage other spent fuel, have been precluded through redundant handling systems, control system upgrades, and mechanical stops/electrical interlocks that preclude crane movement over spent fuel, meeting PG&E's commitments to the guidelines of NUREG-0612, "Control of Heavy Loads at Nuclear Power Plants." For those remaining cases where a cask drop is still credible, the impact-limiter design ensures the deceleration of the contained spent fuel remains below fuel design limits, preventing damage to the contained fuel assemblies (and associated structures), and meeting the analysis guidance of NUREG-0612. As a result of this design approach, a cask-handling accident that results in a significant offsite radiological release is not considered credible.

   Other Diablo Canyon Power Plant (DCPP) licensing-basis events, such as the drop of a spent fuel assembly, have not been affected by these changes and remain bounding events for potential radiological consequences.

   Revision of the DCPP Control of Heavy Loads Program ensures that PG&E's commitments to NUREG-0612 guidelines will protect the new fuel storage locations and the new transfer cask/multi-purpose canister (MPC) loading/unloading activities.

The addition of restraint structures and use of impact limiters preclude adverse effects from seismic events and/or cask drops or tipovers, assuring that the fuel, MPC, transfer cask, and other potentially affected 10 CFR 50 structures remain within their design bases. The addition and installation of this equipment will be done after necessary evaluation and analysis is performed, to ensure the equipment does not introduce any unacceptable effect (e.g., seismic interaction).

The proposed design of the dry cask system, the handling system, and associated procedural controls provide assurance that (1) operational errors and mishandling events, and (2) support system malfunctions will not result in an increase in the probability or consequence of an accident previously analyzed.

The proposed changes to use the Holtec HI-STORM 100 system have been evaluated for seismic events and tornado missile impacts and it has been determined that these changes will not result in an increase in the probability or consequences of an accident previously evaluated.

The Fire Protection Program will ensure that the combustible materials are properly controlled such that the total combustibles meet the current program commitments.

Therefore, the proposed changes do not involve a significant increase in the probability or consequences of an accident.

2. *Do the proposed changes create the possibility of a new or different kind of accident from any accident previously evaluated?*

Response: No

The engineering design measures and the handling procedures preclude the possibility of new or different kinds of accidents. Damage to 10 CFR 50 SSCs from the cask handling and associated activities, and events resulting from possible damage to contained fuel, have been carefully considered in the following safety analyses. Both the types of accidents and the results remain within the envelope of existing analyses, as demonstrated by the PG&E and Holtec analyses.

In Supplement No. 2 to the Safety Evaluation of DCPP (Reference 7.18), the NRC reviewed and accepted Amendment 27 of the original DCPP Final Safety Analysis Report (FSAR) analysis of a cask-drop accident. Amendment 22 to Facility Operating License No. DPR-80 and Amendment 21 to Facility Operating License No. DPR-82 allowed expansion of the spent fuel pool (SFP) storage capacity. In the safety evaluation for these amendments, the NRC reviewed the cask-drop accident and noted that

the licensee had proposed administrative controls that would preclude the movement of a spent-fuel shipping cask in an exclusion zone over, and in the vicinity of, stored spent fuel that could result in a cask drop or tipping accident damaging stored spent fuel.

Supplement No. 27 to the Safety Evaluation Report for DCPP Unit 1 (Reference 7.19) and in Supplement No. 31 to the Safety Evaluation Report for Unit 2 (Reference 7.20) included the review and acceptance of the DCPP Control of Heavy Loads Program.

The rupture of MPC dewatering, vacuum, forced helium dehydration or related closure system lines or the malfunction of equipment during cask handling operations resulting in radiological consequences are bounded by the DCPP Final Safety Analysis Report (FSAR) Update fuel-handling accident analysis.

Other design considerations, such as SFP thermal, water chemistry and clarity, criticality, and structural, were evaluated and determined not to introduce the possibility of a new or different kind of accident from any previously evaluated.

Therefore, the proposed changes do not create the possibility of a new or different kind of accident from any previously evaluated.

3. *Do the proposed changes involve a significant reduction in a margin of safety?*

Response: No

With the Holtec HI-STORM 100 System, and the associated design and handling procedures, most cask drops and other events have been completely precluded through redundant load-handling systems, providing defense-in-depth as described in NUREG-0612, and meeting PG&E's commitments to the guidance of NUREG-0612. In those remaining cases where a cask drop is still credible, impact limiter design ensures that the deceleration of the contained spent fuel remains below fuel design limits, preventing damage to the contained fuel assemblies (and associated structures), and meeting the analysis guidelines of NUREG-0612. As a result of this design approach, the margin of safety has been maintained through the elimination of certain drops and the associated structural challenges.

Other DCPP licensing-basis events, such as the drop of a spent fuel assembly, have not been affected by these changes and remain bounding events.

Revision of DCPP Control of Heavy Loads Program to incorporate the additional restrictions on heavy loads movement will not affect the procedures or methodology used and will, therefore, not affect margins.

The addition of restraint structures and use of impact limiters preclude adverse effects from seismic events and/or cask drops or tipovers, assuring that the fuel, MPC, transfer cask, and other potentially affected 10 CFR 50 structures remain within their design bases. Since design-basis criteria are fully satisfied, there is no impact on the margin of safety.

The Fire Protection Program will continue to ensure that the combustible materials are properly controlled such that the total combustibles meet the current program commitments. Thus, there are no significant reductions in margin of safety associated with these changes.

Other design considerations, such as SFP thermal, water chemistry, criticality, and structural, were evaluated and determined to not involve a reduction in a margin of safety.

Therefore, the proposed changes do not involve a reduction in a margin of safety.

Based on the above evaluations, PG&E concludes that the activities associated with the above changes present no significant hazards consideration under the standards set forth in 10 CFR 50.92 and accordingly, a finding by the NRC of no significant hazards consideration is justified.

6.0 ENVIRONMENTAL EVALUATION

PG&E has evaluated the proposed changes and has determined that the changes do not involve (a) a significant hazards consideration, (b) a significant change in the types or significant increase in the amounts of any effluent that may be released offsite, or (c) a significant increase in the individual or cumulative occupational radiation exposure. Accordingly, the proposed changes meet the eligibility criterion for categorical exclusion set forth in 10 CFR 51.22(c)(9). Therefore, pursuant to 10 CFR 51.22(b), an environmental assessment of the proposed changes is not required.

7.0 REFERENCES

7.1 Movement of Heavy Loads Over Spent Fuel, Over Fuel in the Reactor Vessel Core, or Over Safety-Related Equipment, USNRC, Bulletin 96-02, April 11, 1996.

7.2 PG&E Letter DIL-01-002 to the NRC, License Application for Diablo Canyon Independent Spent Fuel Storage Installation, December 21, 2001.

7.3 PG&E, Units 1 and 2 Diablo Canyon Power Plant, Final Safety Analysis Report Update, Revision 14, November 2001.

7.4 NRC letter to PG&E, Conversion to Improved Technical Specifications for Diablo Canyon Power Plant, Units 1 and 2, Amendment No. 135 to Facility Operating License Nos. DPR-80 and DPR-82 (TAC Nos. M98984 and M98985), May 28, 1999.

7.5 Diablo Canyon Independent Spent Fuel Storage Installation Safety Analysis Report, as submitted in PG&E Letter DIL-01-002, to the NRC, December 21, 2001.

7.6 NRC Letter to PG&E, Completion of Licensing Action for NRC Bulletin 96-02, "Movement of Heavy Loads Over Spent Fuel, Over Fuel in the Reactor Core, or Over Safety-Related Equipment, Diablo Canyon Power Plant Units Nos. 1 and 2 (TAC Nos. M95580 and M955891), April 21, 1998NUREG-0612 Submittals

7.7 NRC letter to PG&E, dated October 20, 1987, granting License Amendment No. 22 to Unit 1 and No. 21 to Unit 2.

7.8 PG&E Letter DCL-96-111 to the NRC, Response to NRC Bulletin 96-02, Movement of Heavy Loads Over Spent Fuel, Over Fuel in the Reactor Core, or Over Safety-Related Equipment, May 13, 1996.

7.9 10 CFR 72 Certificate of Compliance for the HI-STORM 100 System Dry Cask Storage System, Holtec International, Revision 0, May 1, 2000.

7.10 Final Safety Analysis Report for the HI-STORM 100 System, Holtec International Report No. HI-2002444, Revision 0, July 2000.

7.11 License Amendment Request 1014-1, Holtec International, Revision 2, July 2001, including Supplements 1 through 4 dated August 17, 2001; October 5, 2001; October 12, 2001; and October 19, 2001, respectively.

7.12 ANSI/ANS N14.5, Radioactive Materials - Leakage Tests on Packages for Shipment, American National Standards Institute, 1997

7.13 ANSI B30.2-1976, Overhead and Gantry Cranes, American National Standards Institute, August 1976

7.14 PG&E Letter DCL-84-373, Updated Response to NUREG-0612, Control of Heavy Loads, December 5, 1984.

7.15 Safety Evaluation Report Related to the Operation of Diablo Canyon Nuclear Power Plant, Units 1 and 2, USNRC, NUREG-0675, Supplement No. 11, October 1980.

7.16 Standard Review Plan for Dry Cask Storage Systems, USNRC, NUREG-1536, January 1997.

7.17 Safety Evaluation of the Diablo Canyon Nuclear Power Station Units 1 and 2, Docket Nos. 50-275 and 50-323, USNRC, October 16, 1974.

7.18 Safety Evaluation Report Related to the Operation of Diablo Canyon Nuclear Power Plant, Units 1 and 2, USNRC, Supplement No. 2, May 9, 1975.

7.19 Safety Evaluation Report Related to the Operation of Diablo Canyon Nuclear Power Plant, Units 1 and 2, USNRC, NUREG-0675, Supplement No. 27, July 1984.

7.20 Safety Evaluation Report Related to the Operation of Diablo Canyon Nuclear Power Plant, Units 1 and 2, USNRC, NUREG-0675, Supplement No. 31, April 1985.

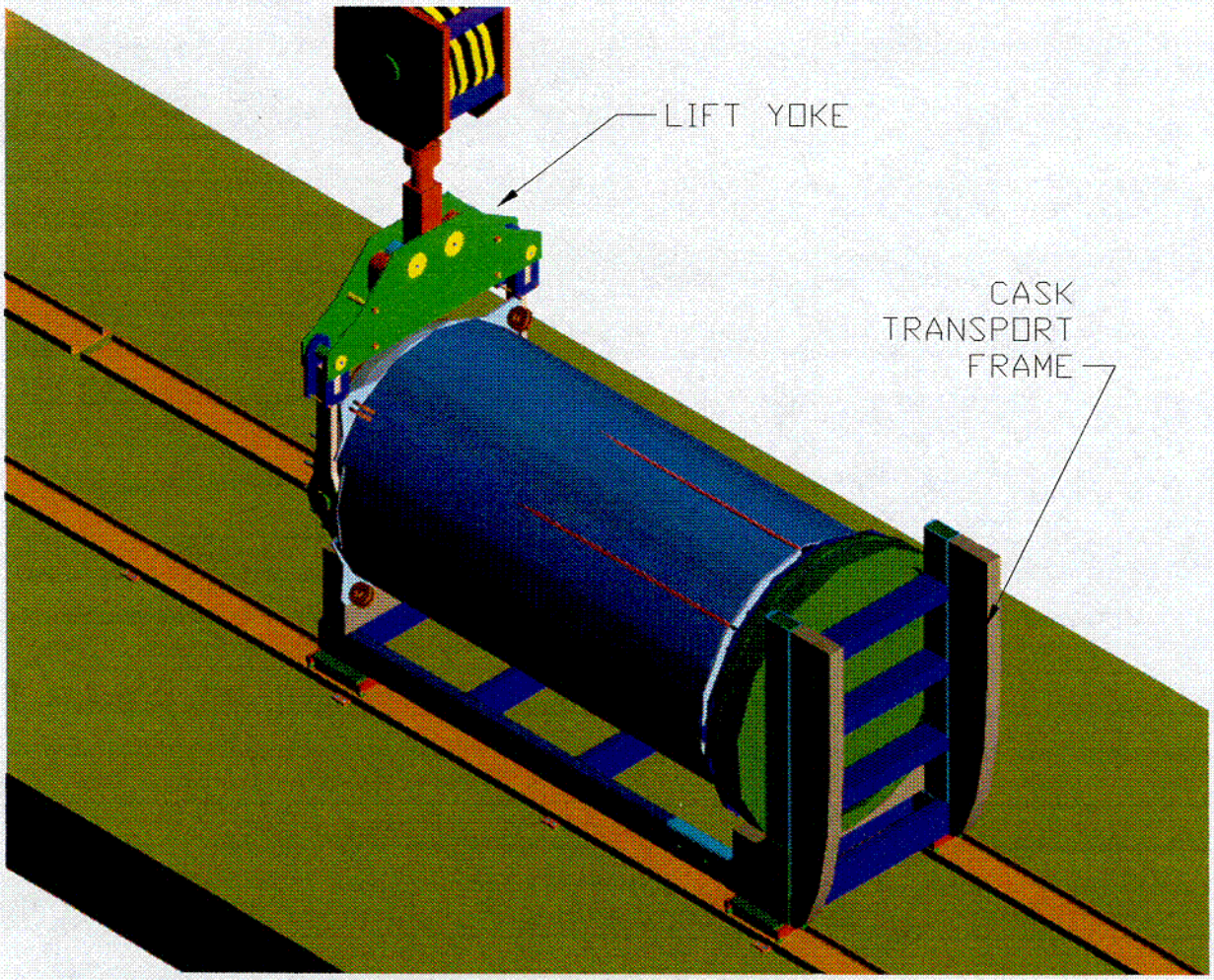

FIGURE 1

TRANSFER CASK, CASK TRANSPORT FRAME, AND RAIL SYSTEM

C01

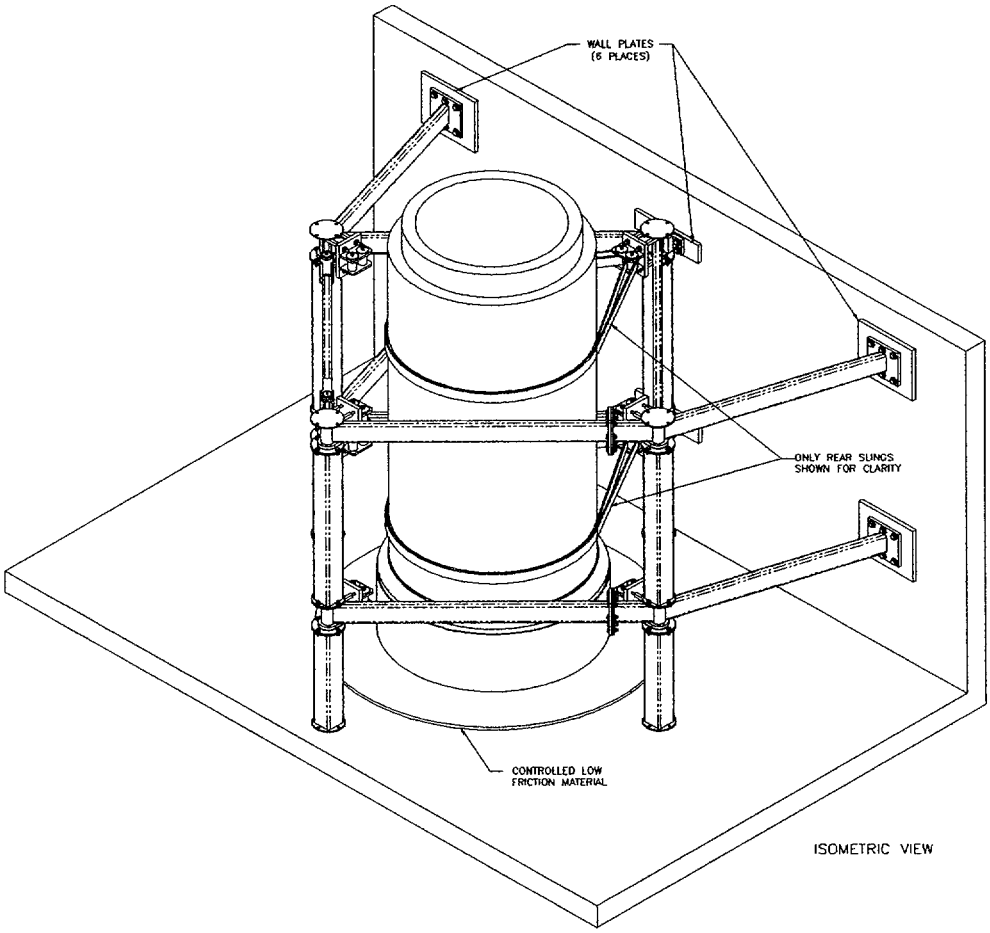

FIGURE 2

CASK WASHDOWN AREA RESTRAINT

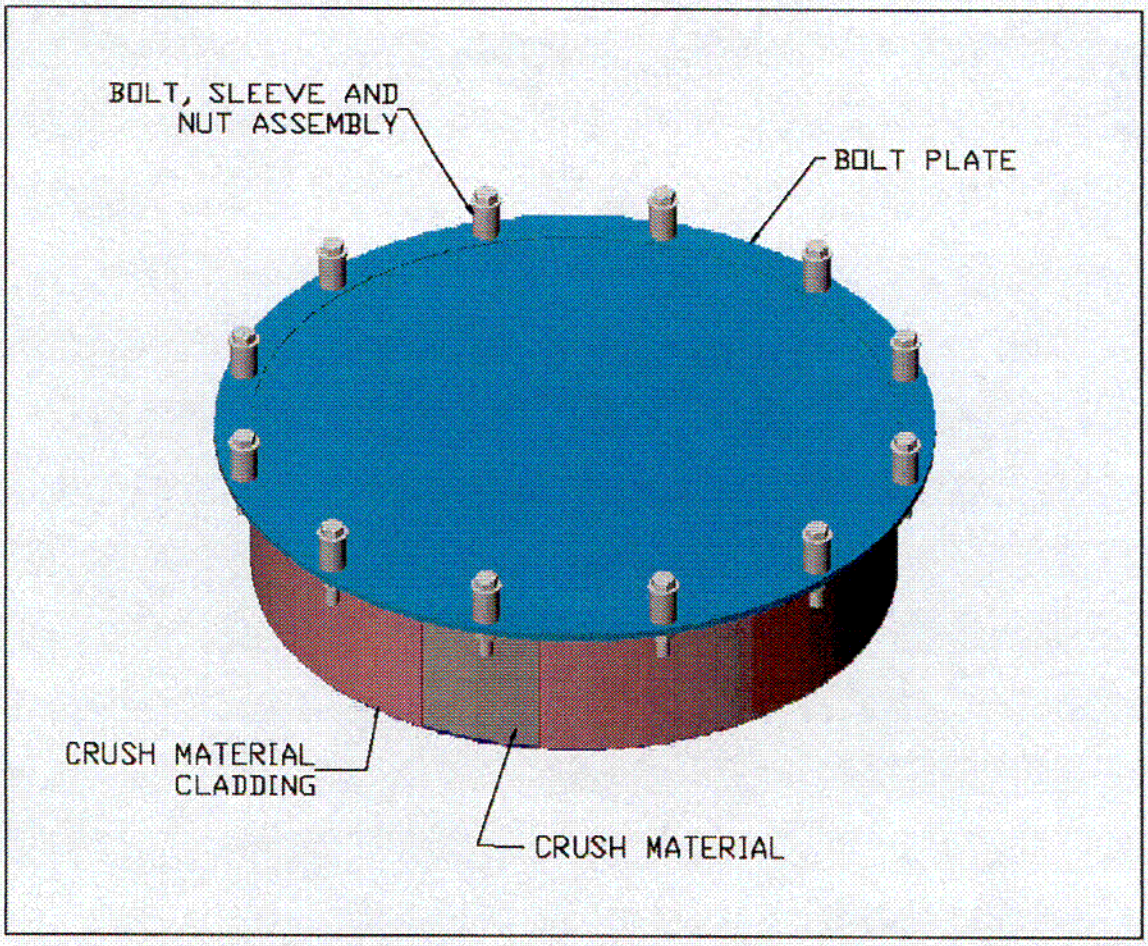

FIGURE 3

TRANSFER CASK IMPACT LIMITER

C02

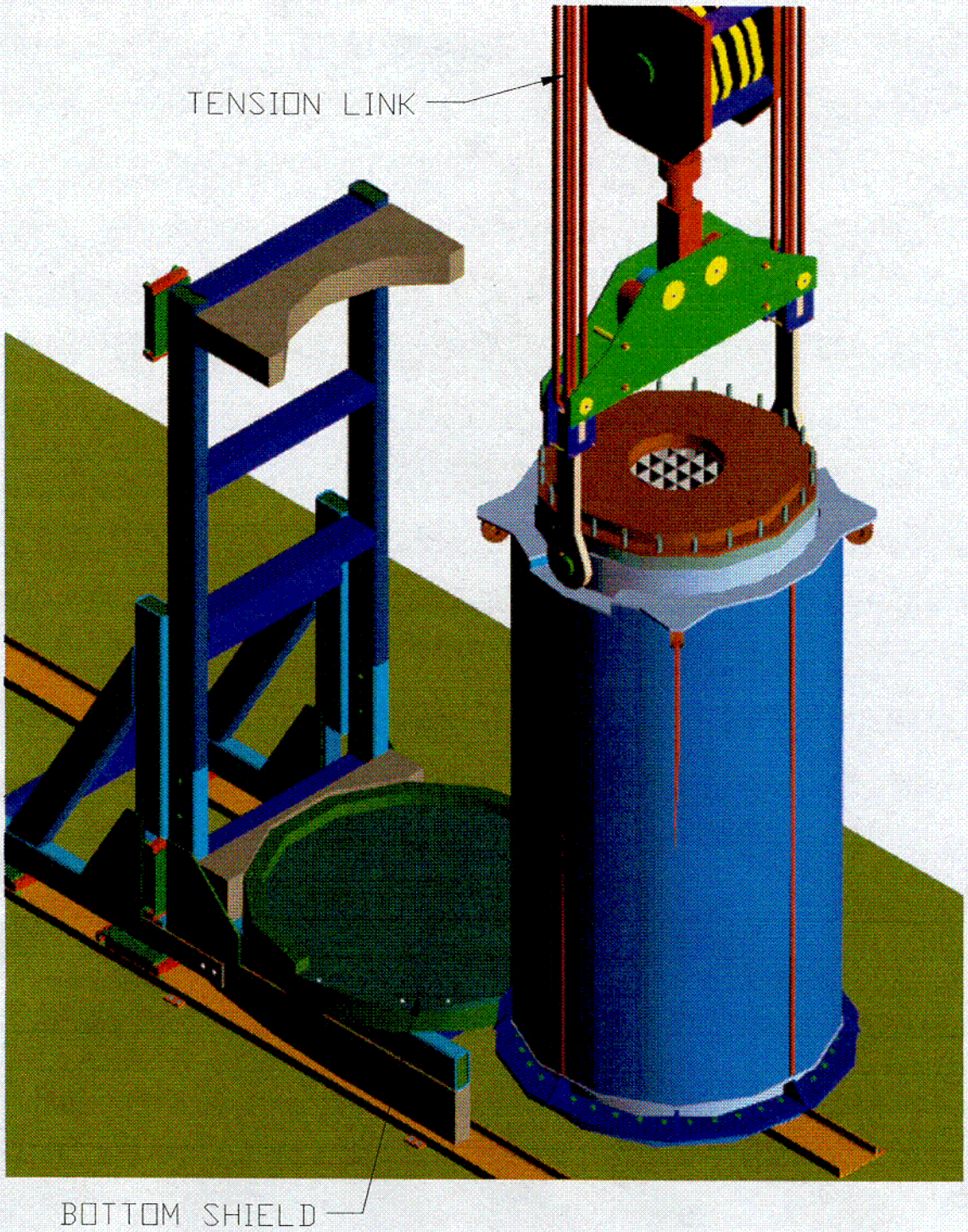

FIGURE 4

TRANSFER CASK REMOVAL FROM THE CASK TRANSPORT FRAME, SHOWING YOKE AND TENSION LINKS

C03

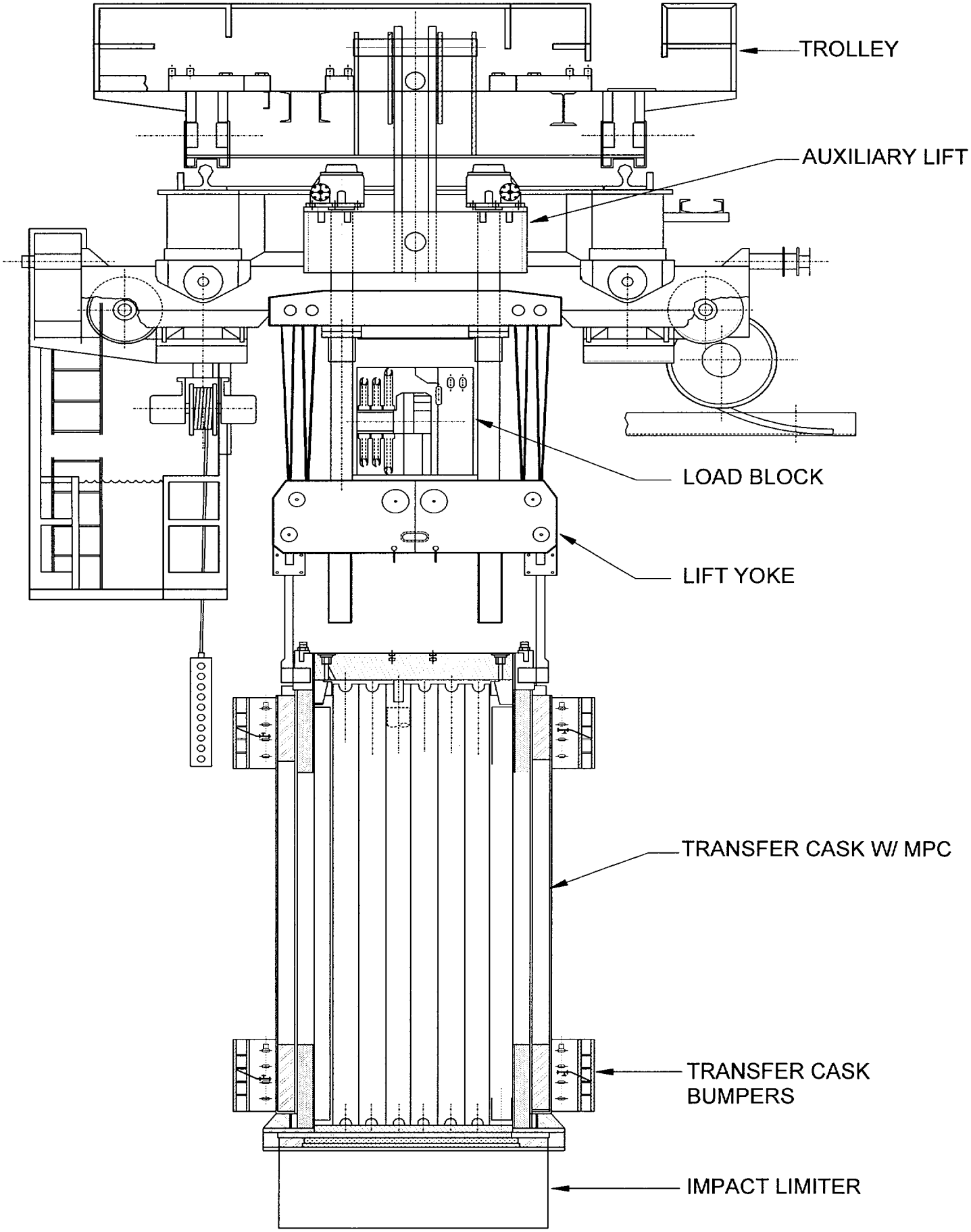

FIGURE 5

FUEL HANDLING BUILDING CRANE FEATURES

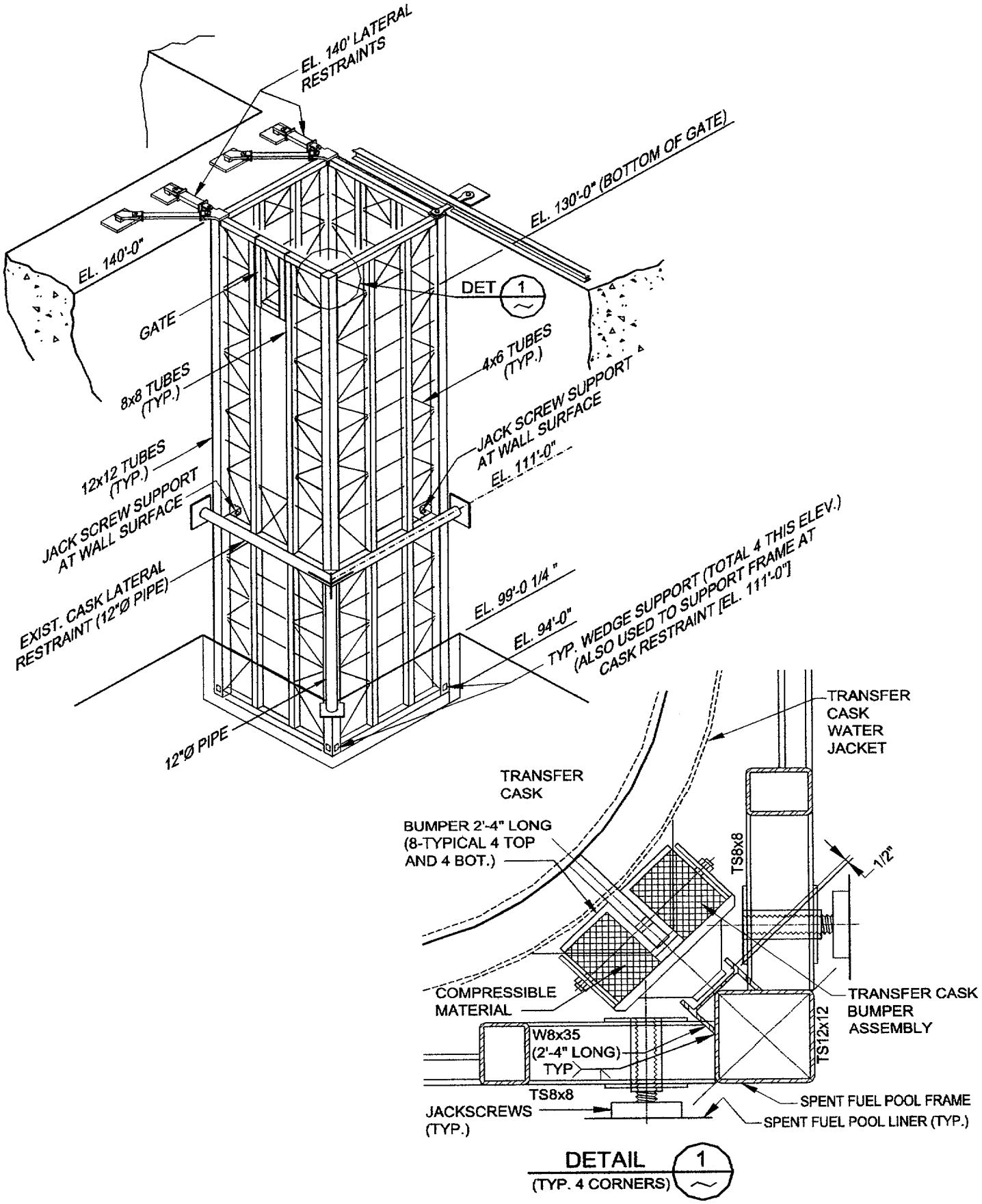

FIGURE 6

SPENT FUEL POOL FRAME

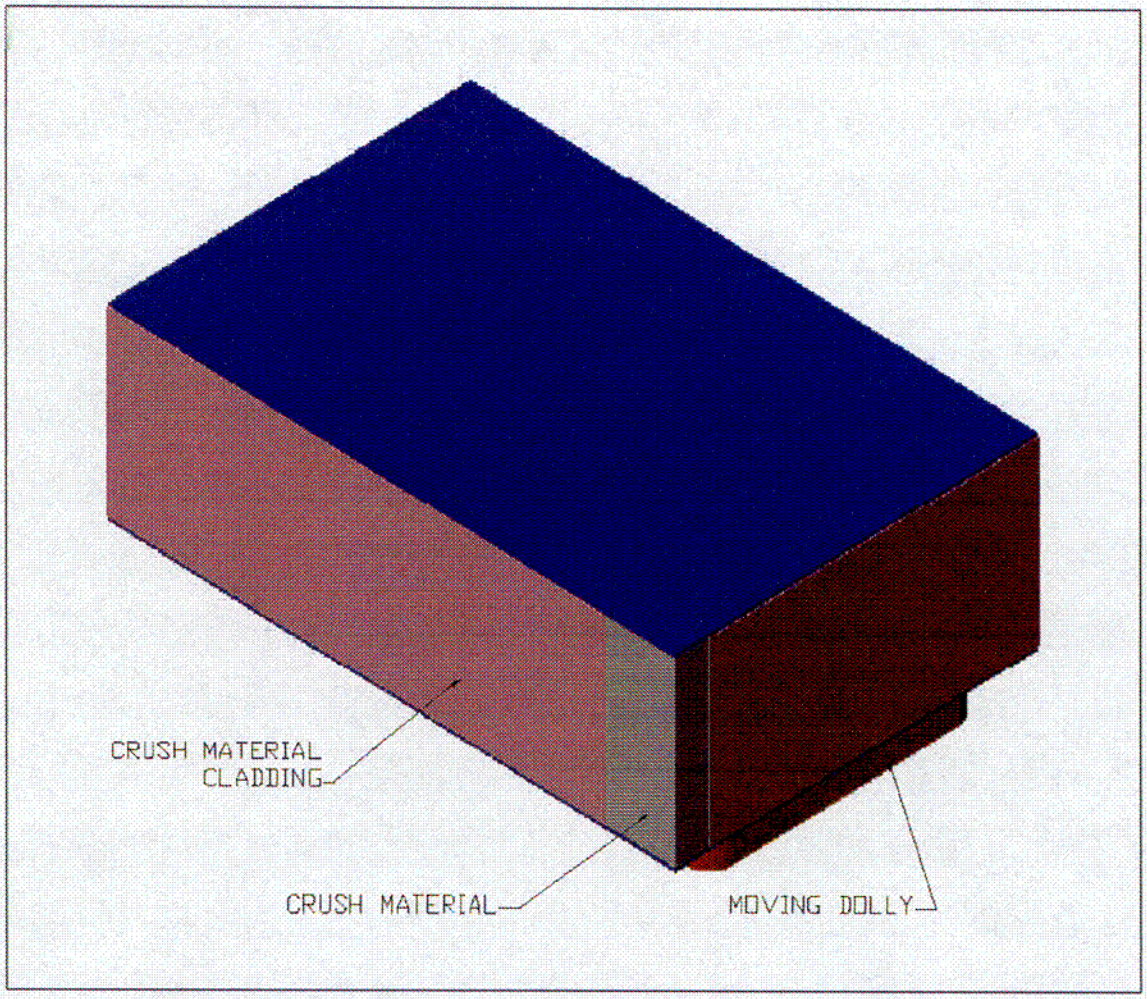

FIGURE 7

CASK TRANSFER FRAME IMPACT LIMITER

C04

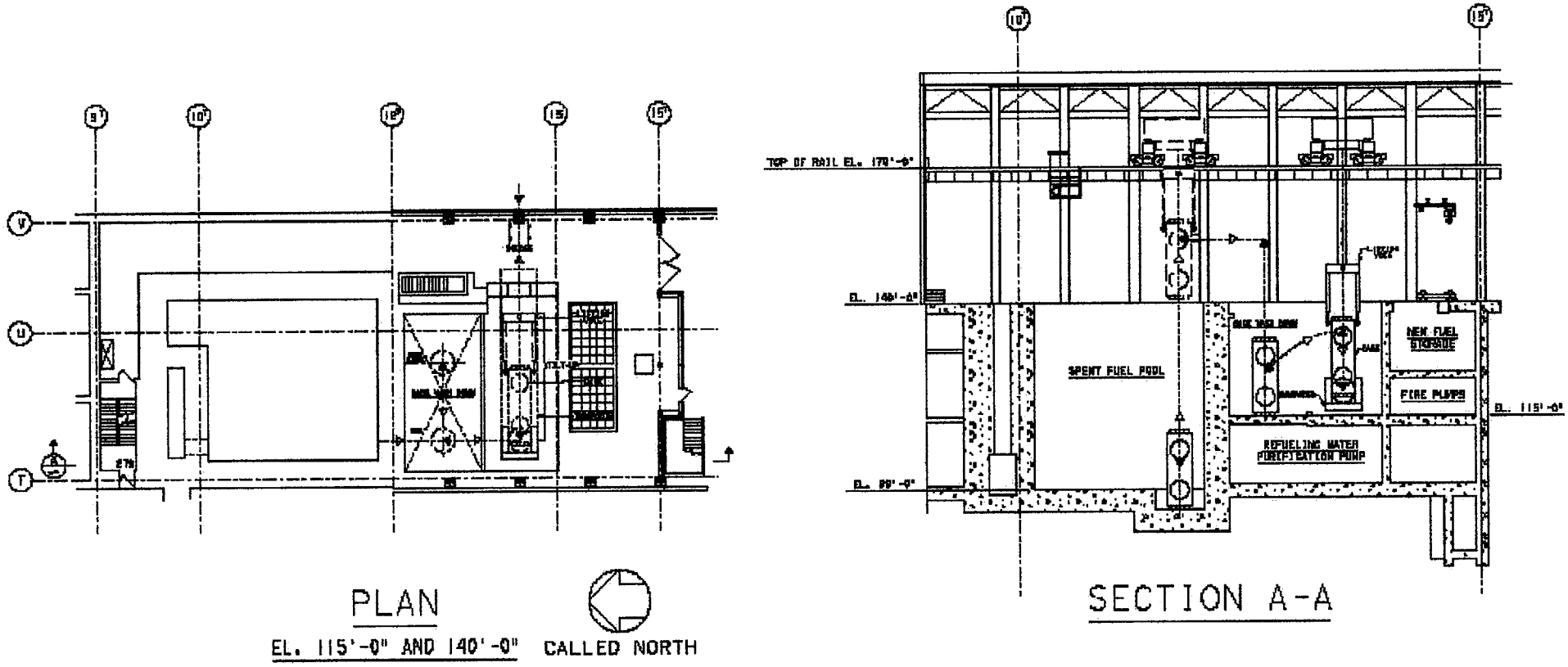

FIGURE 8

HEAVY LOAD HANDLING PATHS FOR THE TRANSFER CASK/MPC

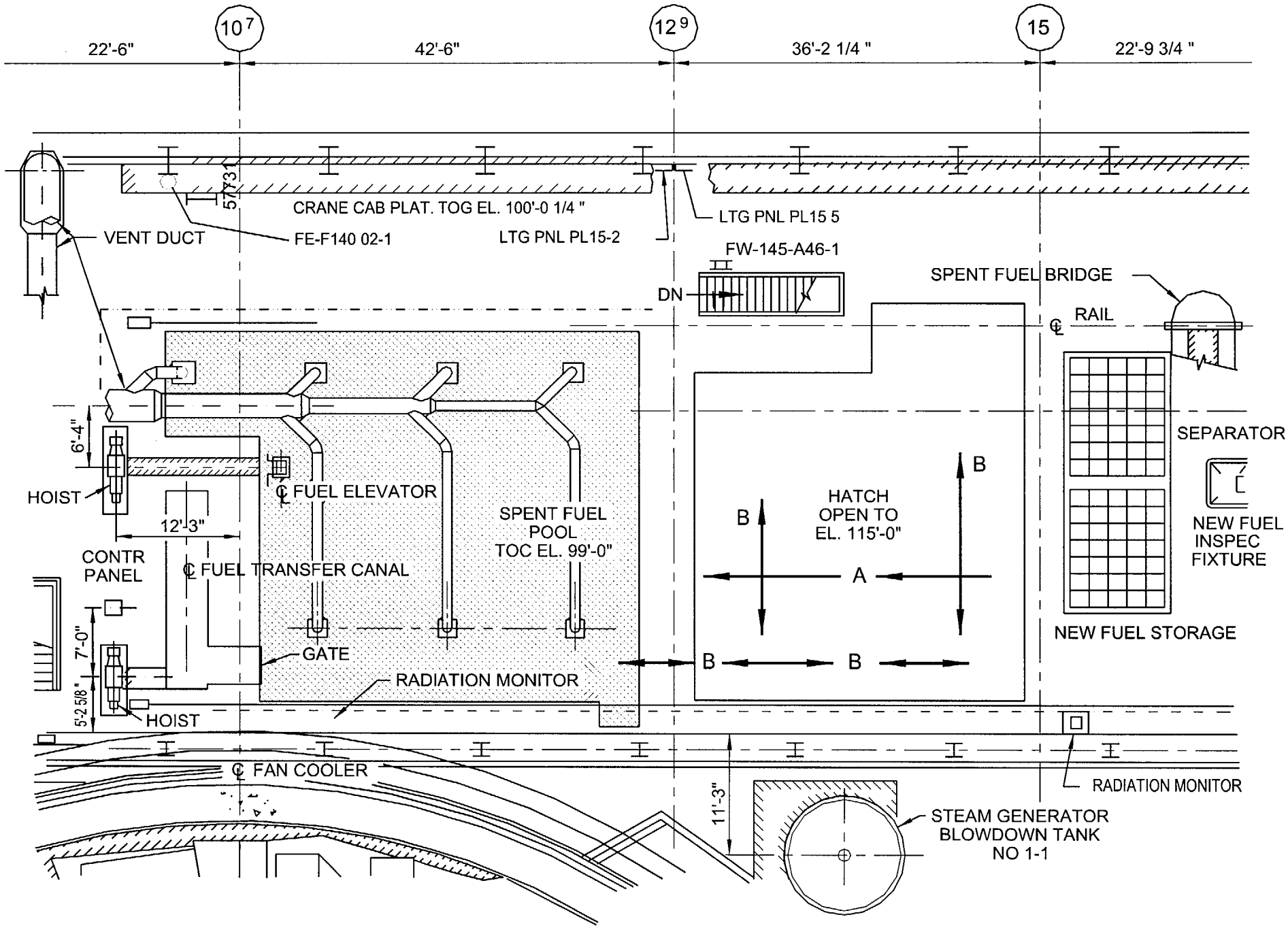

FIGURE 9

HEAVY LOAD HANDLING PATHS FOR THE TRANSFER CASK/MPC

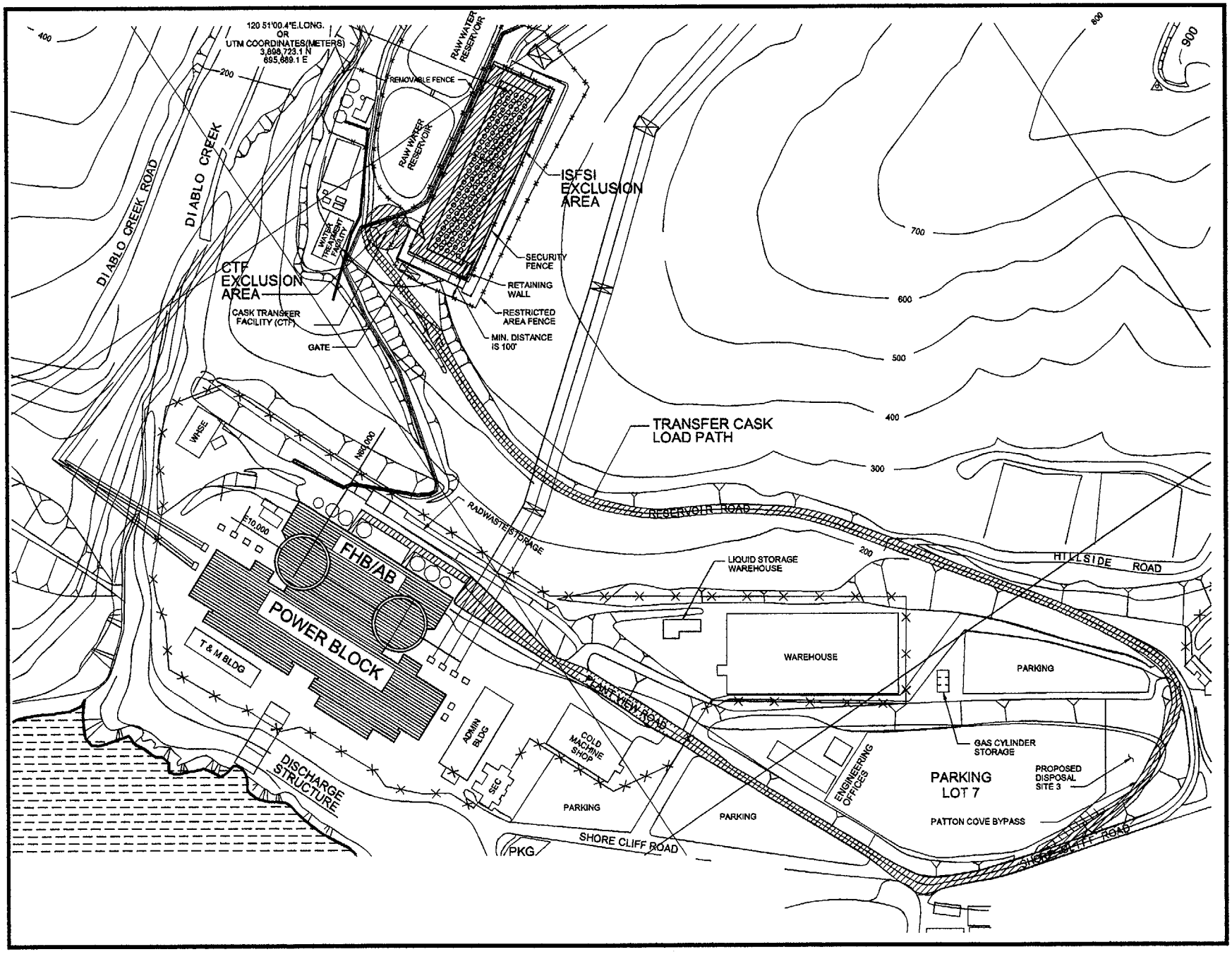

FIGURE 10

HEAVY LOAD HANDLING PATHS FOR THE TRANSPORTER AND TRANSFER CASK/MPC

REQUEST FOR EXTENSION OF EXEMPTION FROM 10 CFR 70.24(A) CRITICALITY ACCIDENT REQUIREMENTS

A. INTRODUCTION

Pursuant to 70.24(d), PG&E hereby requests extension of its existing exemption from the requirements of 10 CFR 70.24(a), "Criticality Accident Requirements," for Diablo Canyon Power Plant (DCPP), Units 1 and 2.

10 CFR 70.24(a) sets forth the requirements for a monitoring system that will energize clearly audible alarms if accidental criticality should occur in any area in which special nuclear material (SNM) is handled, used, or stored. Also, 10 CFR 70.24(a) requires that emergency procedures be maintained for each area in which licensed SNM is handled, used, or stored to ensure that all personnel withdraw to an area of safety upon the sounding of the alarm. These procedures must include (1) the conduct of drills to familiarize personnel with the evacuation plan, (2) designation of responsible individuals for determining the cause of the alarm, and (3) placement of radiation survey instruments in accessible locations for use in such an emergency.

Specific exemption from 10 CFR 70.24 was previously requested in a PG&E letter dated April 3, 1997, for DCPP Units 1 and 2. This information was supplemented in a PG&E letter dated August 4, 1997. This exemption request was granted by the NRC in a letter dated November 12, 1997, "Issuance of Exemption from the Requirements of 10 CFR 70.24 - Diablo Canyon Power Plant, Units 1 and 2 (TAC NOs. M98425 and M98426)."

That exemption did not address some conditions that will be encountered during handling of loaded Holtec International's multi-purpose canisters (MPCs) and transfer casks in the DCPP 10 CFR 50 facilities. These activities are described in the License Amendment Request (LAR) to which this request is attached. No changes in the existing exemption, as related to unirradiated nuclear fuel, other SNM, or spent fuel handling, until movement of a loaded transfer cask/MPC, are requested. Therefore, the remainder of this discussion is directed toward the requirements of 70.24(a) with respect to irradiated nuclear fuel after more than one fuel assembly has been loaded into a transfer cask/MPC assembly.

PG&E believes that an exemption from 10 CFR 70.24 for DCPP Units 1 and 2 during handling and closure of the MPC is appropriate for the same reasons the NRC previously granted the exemption in their November 12, 1997, letter. A criticality accident monitoring system was and is not necessary at either DCPP Unit 1 or 2, as further discussed below. Such exemptions from 10 CFR 70.24 are typically granted to 10 CFR 50 licensees.

B. REGULATORY REQUIREMENTS

10 CFR 70.24 requires that each licensee authorized to possess SNM shall maintain a criticality accident monitoring system in each area where such material is handled, used, or stored.

Subsections (a)(1) and (a)(2) of 10 CFR 70.24 specify detection and sensitivity requirements that these monitors must meet.

Subsection (a)(1) also specifies that all areas subject to criticality accident monitoring must be covered by two detectors.

Subsection (a)(3) of 10 CFR 70.24 requires licensees to maintain emergency procedures for each area in which this licensed SNM is handled, used, or stored and provides that:

(1) the procedures ensure that all personnel withdraw to an area of safety upon the sounding of a criticality accident monitor alarm,

(2) the procedures must include drills to familiarize personnel with the evacuation plan, and

(3) the procedures designate responsible individuals for determining the cause of the alarm and placement of radiation survey instruments in accessible locations for use in such an emergency.

Subsection (b)(1) of 10 CFR 70.24 requires licensees to have a means to identify quickly personnel who have received a dose of 10 Rads or more.

Subsection (b)(2) of 10 CFR 70.24 requires licensees to maintain personnel decontamination facilities, to maintain arrangements for a physician and other medical personnel qualified to handle radiation emergencies, and to maintain arrangements for the transportation of contaminated individuals to treatment facilities outside the site boundary.

Paragraph (c) of 10 CFR 70.24 exempts 10 CFR 50 licensees from the requirements of paragraph (b) of 10 CFR 70.24 for SNM used or to be used in the reactor.

Paragraph (d) of 10 CFR 70.24 states that any licensee who believes that there is good cause why they should be granted an exemption from all or part of 10 CFR 70.24 may apply to the Commission for such an exemption and shall specify the reasons for the relief requested.

C. JUSTIFICATION FOR GRANTING THE EXEMPTION REQUESTS

10 CFR 70.24(d) anticipates that licensees may need relief from the requirements of 10 CFR 70.24 and allows licensees to apply for an exemption from 10 CFR 70.24, in whole or in part, if "good cause" is shown. PG&E believes that good cause exists to support extending the exemptions for DCPP Units 1 and 2 to cover handling within the transfer cask/MPCs for the following reasons:

(a) the fuel storage design and procedural controls preclude accidental criticality within the transfer cask/MPC assembly, and

(b) compliance with 10 CFR 70.24 is not necessary to achieve the underlying purpose of the regulation. The purpose of the criticality monitors, required by 10 CFR 70.24, is to ensure that if a criticality were to occur during the handling of SNM, personnel would be alerted to that fact and would take appropriate action. It is extremely unlikely that such an accident could occur; nonetheless, PG&E has radiation monitors, as required by General Design Criterion (GDC) 63, in the affected fuel storage and handling areas. These monitors will alert personnel to excessive radiation levels and allow them to initiate appropriate safety actions.

The low probability of an inadvertent criticality, together with adherence to GDC 63, constitutes good cause for granting an exemption to the requirements of 10 CFR 70.24.

The NRC has previously evaluated the possibility of an inadvertent criticality of the nuclear fuel using the following criteria to determine if it is extremely unlikely for such an accident to occur:

1. *Only one fuel assembly is allowed out of a shipping cask or storage rack at a time.*

   Movement of spent fuel from the spent fuel storage racks to the transfer cask/MPC is controlled by procedure and is done one spent fuel pool (SFP) cell at a time. Normally this results in movement of only one assembly at a time. Damaged fuel and fuel components may be loaded into special containers and then the MPC; however the total inventory of one such container will not exceed the reactivity allowed to be stored in a single SFP cell or MPC cell. Hence, procedural controls preclude criticality from proximity of multiple assemblies.

2. k_{eff} *does not exceed 0.95, at a 95 percent probability, 95 percent confidence level in the event that the fresh fuel storage racks are filled with fuel of the maximum permissible U-235 enrichment and flooded with pure water.*

   This is not applicable to spent fuel.

3. *If optimum moderation occurs at low moderator density, then* k_{eff} *does not exceed 0.98, at a 95 percent probability, 95 percent confidence level in the event that the fresh fuel storage racks are filled with fuel of the maximum permissible U-235 enrichment and flooded with a moderator at the density corresponding to optimum moderation.*

   This is not applicable to spent fuel.

4. k_{eff} *does not exceed 0.95, at a 95 percent probability, 95 percent confidence level in the event that the spent fuel storage racks are filled with fuel of the maximum permissible U-235 enrichment and flooded with pure water.*

   k_{eff} is maintained below 0.95, including uncertainties, for MPCs with all allowable fuel loads. This requires soluble boron in the MPC's water, however, this is ensured by a number of procedural requirements, as specified in the proposed Diablo Canyon Independent Spent Fuel Storage Installation (ISFSI) Technical Specifications (TS) and the Diablo Canyon ISFSI Safety Analysis Report (SAR). In addition, the criticality analysis has a number of conservatisms, as highlighted below and described in more detail in Chapter 6 of the HI-STORM 100 System Final Safety Analysis Report (FSAR), as amended by Holtec license amendment request (LAR) 1014-1.

   While the proposed Diablo Canyon ISFSI TS require boron in the MPC, multiple procedural controls are provided to ensure it is provided and maintained. Dilution is very unlikely, because of the process design, the limited and controlled dilution sources, the procedural controls, and the very limited time the MPC is in this condition. Collectively, this provides reasonable assurance that a criticality event remains extremely unlikely.

5. *The quantity of forms of special nuclear material, other than nuclear fuel, that are stored on site in any given area is less than the quantity necessary for a critical mass.*

   No changes have occurred in this area. The total SNM at DCPP, other than nuclear fuel, is less than the quantity necessary for a critical mass.

6. *Radiation monitors, as required by General Design Criterion 63, are provided in fuel storage and handling areas to detect excessive radiation levels and to initiate appropriate safety actions.*

   Radiation monitoring is provided. As discussed in Section 9.1.2.2 of the DCPP FSAR Update, SFP radiation monitors R-58 and R-59 provide for personnel protection and general surveillance of the SFP area. Continuous monitoring and recording readouts and high radiation level alarms in the control room, plus local audible and visual indicators, are provided. Portable radiation monitors are used to provide for personnel protection and general surveillance in the cask washdown area (CWA). They are provided with local audible and visual indication.

7. *The maximum nominal U-235 enrichment is limited to 5.0 weight percent.*

   No changes have occurred in this area. The maximum enrichment of all fuel used at DCPP is no greater than 5.0 weight percent.

Specific requirements for granting exemptions from the provisions of 10 CFR 70 are set forth in 10 CFR 70.14(a) and 10 CFR 70.24(d). Under 10 CFR 70.14(a), the NRC is authorized to grant an exemption upon a demonstration that the exemption: (1) is authorized by law; (2) will not endanger life or property or the common defense and security; and (3) is in the public interest. The following analysis addresses each of these requirements and demonstrates that the NRC should grant the requested exemptions.

1. <u>The Exemption Is Authorized by Law</u>

   The NRC's authority to grant requests for exemptions from its regulations has existed since 1956. The particular authority to grant exemptions from the requirements of 10 CFR 70 was codified at 10 CFR 70.14 in 1972. Moreover, 10 CFR 70.24(d) notes that the NRC has specific and express authority to exempt licensees from the requirements of 10 CFR 70.24. Therefore, the granting of exemptions is explicitly authorized by the NRC's regulations.

2. <u>The Exemption Will not Endanger Life or Property or the Common Defense and Security</u>

   An exemption request will not endanger life or property or the common defense and security if the request meets the statutory standard of adequate protection to the health and safety of the public. To further ensure that the common defense and security are not endangered, the exemption request must demonstrate that the loss or diversion of SNM is precluded. As described below, the use, storage, and handling of SNM at DCPP provides adequate protection of the health and safety of the public, and precludes loss or diversion of SNM. In particular, this discussion focuses on the following

points: design, characteristics, TS requirements, procedural controls, and existing accident analyses.

Use of Special Nuclear Material

SNM is present at DCPP Units 1 and 2, principally in the form of nuclear fuel. However, other quantities of SNM are used, or may be used (and stored) at each unit in the form of fissile material incorporated into nuclear instrumentation (e.g., incore detector system, and gammametrics) and health physics calibration sources. The total amount of SNM used in nonfuel capacities is small and is significantly less than the quantity specified in 70.24(a). The small quantity of nonfuel SNM present, and the form in which it is used and stored, precludes an inadvertent criticality. Additionally, in accordance with 70.24(c), DCPP Units 1 and 2 are exempt from the requirements of 70.24(b) for SNM "used or to be used in the reactor." Therefore, the remainder of this discussion is directed toward the requirements of 70.24(a) with respect to irradiated and unirradiated nuclear fuel. This discussion is further limited to spent fuel within a transfer cask/MPC assembly, as the remainder of new and spent fuel activities are already covered by the existing exemption.

Accidental criticality of SNM while in the transfer cask/MPC assembly is precluded through compliance with the proposed Diablo Canyon ISFSI TS, including dissolved boron concentration in the MPC, criticality control design features, and design and operating controls and limits defined in the Diablo Canyon ISFSI SAR. These include design and analysis to ensure criticality margins with any allowable load, uncertainties, and accident conditions, and cask loading plans to ensure allowable loads requirements are met, with multiple verifications of the plan and implementation.

Criticality design and analyses are described in detail in the Diablo Canyon ISFSI SAR, Sections 3.3.1.4 and 4.2.2.3.5, and in Chapter 6 of the HI-STORM 100 System FSAR, as amended by Holtec LAR 1014-1. There are a number of conservative assumptions used in the HI-STORM 100 System criticality analyses, including not taking credit for fuel burnup or fuel-related burnable neutron absorbers, and only crediting 75 percent of B-10 isotope loading in the Boral neutron absorbers. A complete list of the conservative assumptions in the HI-STORM 100 System criticality analyses is provided in Section 6.1 of the HI-STORM 100 System FSAR, as amended by LAR 1014-1.

Finally, since access to the fuel in the MPC is controlled in the same manner as other spent fuel through appropriate procedures and safeguards (see "Handling of Special Nuclear Material"), there are no concerns associated with loss or diversion of the fuel.

Therefore, the requirements of 70.24(a) are not necessary for SNM in the form of nuclear fuel while stored in the transfer cask/MPC and, therefore, granting these exemption requests will not endanger life or property or the common defense and security.

Storage of Special Nuclear Material

Consideration of SNM, in the form of spent nuclear fuel, is located temporarily in one additional location not previously described – the transfer cask/MPC assembly. The transfer cask/MPC assembly is designed to preclude criticality by:

(1) incorporation of permanent neutron absorbing material (Boral) attached to the MPC fuel basket walls with a minimum required loading of the B-10 isotope,

(2) favorable geometry provided by the MPC fuel basket, and

(3) loading of certain fuel assemblies is performed in water with a soluble boron content as specified in the proposed Diablo Canyon ISFSI TS.

Analyses demonstrate with these features that K_{eff} is maintained at less than 0.95 under all conditions, including accidents.

Handling of Special Nuclear Material

The handling of fuel within the transfer cask/MPC is discussed in this LAR and in the Diablo Canyon ISFSI SAR in detail. In all cases, it is procedurally controlled and structures, systems, and components are designed to preclude conditions involving criticality concerns.

Moreover, as noted above, accident analyses have demonstrated that a postulated fuel handling accident (e.g., a dropped fuel element) will not create conditions that exceed design-basis limits. In addition, the proposed Diablo Canyon ISFSI TS and SAR specifically address the limiting conditions for use of the transfer cask/MPC to ensure against an accidental criticality.

The procedural controls discussed above ensure that handling of SNM is authorized and monitored, thus minimizing the potential opportunity for loss or diversion. Consequently, the issuance of the required exemption would not affect the capability to ensure that SNM is safeguarded during handling.

Therefore, conformity with the requirements of 70.24(a) is not necessary for the handling of SNM, and granting of these exemption requests will not endanger life or property or the common defense and security.

It should be noted that, in the event that this exemption request is granted, PG&E will remain in compliance with the requirements of 10 CFR 50, Appendix A, GDC 18, 1967 (equivalent to GDC 63, 1971), for fuel storage areas. As discussed in Section 9.1.2.2 of the DCPP FSAR Update, SFP radiation monitors R-58 and R-59 provide for personnel protection and general surveillance of the SFP area. Continuous monitoring and recording readouts and high radiation level alarms in the control room, plus local audible and visual indicators, are provided. Portable radiation monitors are used to provide for personnel protection and general surveillance in the CWA. They are provided with local audible and visual indication.

In the event of a radiation monitor alarm, workers qualified to work in radiologically-controlled areas are trained, as a part of the General Employee Training, to either respond to guidance from chemistry and radiation protection (C&RP) personnel that might be in the area, or to evacuate the area immediately and report the alarm to C&RP personnel at Access Control.

3. The Exemption is in the Public Interest

The NRC has not provided specific guidance on how to apply the "public interest" standard under 10 CFR 70.14(a). However, in a 1985 amendment to 10 CFR 50.12(a), the NRC deleted the "public interest" standard from that section in favor of defining the "special circumstances" that justify requesting an exemption from the NRC regulations. At the same time, the NRC implied that 10 CFR 70.14(a) was not revised to be consistent with 10 CFR 50.12(a) only because the NRC did not envision frequent use of 70.14(a). It seems reasonable to assume that the NRC intended the "special circumstances" provision articulated in 50.12(a) to serve the same purpose as the "public interest" criterion of 70.14(a) and that an exemption request that satisfies the special circumstances of 50.12(a) also satisfies the public interest element of 70.14(a).

Among the several special circumstances identified in 50.12(a)(2), two circumstances are relevant to these exemption requests:

(a)(2)(ii) Application of the regulation in the particular circumstances would not serve the underlying purpose of the rule or is not necessary to achieve the underlying purpose of the rule; or

(a)(2)(iii) Compliance would result in undue hardship or other costs that are significantly in excess of those contemplated when the regulation was adopted, or that are significantly in excess of those incurred by others similarly situated.

Each of the 50.12(a)(2) items are reviewed below.

(a)(2)(ii) Application of the regulation in the particular circumstances would not serve the underlying purpose of the rule or is not necessary to achieve the underlying purpose of the rule.

The explicit language of 70.24 does not identify the purpose(s) for requiring an accidental criticality monitoring system and the associated emergency procedures. However, the NRC has stated, in their November 12, 1997, exemption, "The purpose of the criticality monitors required by 10 CFR 70.24 is to ensure that if a criticality were to occur during the handling of SNM, personnel would be alerted to that fact and would take appropriate action."

As discussed above, the design characteristics of, and safety analyses for, the transfer cask/MPC, as well as the associated procedural controls and TS requirements, ensure that conditions for accidental criticality are precluded. Nonetheless, in the very unlikely event of a criticality event, monitors will provide indications and alarms, as described herein.

Therefore, the application of 10 CFR 70.24(a) to DCPP Units 1 and 2 would not serve, and is not necessary to achieve, the underlying purpose of this requirement. Additionally, DCPP fuel storage requirements for new and spent fuel were reviewed and approved by the NRC (see PG&E Letters DCL-89-319, dated December 20, 1989, and DCL-90-034, dated January 30, 1990, in support of LAR 89-15, as subsequently approved by the NRC in License Amendments 50 and 49, for Units 1 and 2, respectively, issued on February 26, 1990, and correspondence for LAR 95-01.)

Based on these special circumstances that would justify the granting of the exemption applications using the guidance of 50.12(a), the exemption requests are in the public interest for the purposes of 70.14(a).

(a)(2)(iii) Compliance would result in undue hardship or other costs that are significantly in excess of those contemplated when the regulation was adopted, or that are significantly in excess of those incurred by others similarly situated.

A criticality accident monitoring system requires a considerable expenditure of resources, including the design and installation of the system, the development and implementation of any associated emergency procedures, and the operation and maintenance of the system for the life of the plant. In light of the purpose of an accidental criticality monitoring system, the expenditures could otherwise be put to better use improving the operation of the plant. Accordingly, compliance with 10 CFR 70.24(a) would result in an undue hardship and other costs that are significantly in excess of those likely contemplated when this regulation was adopted.

D. CONCLUSION

The low probability of an inadvertent criticality, together with adherence to GDC 63, constitutes good cause for granting an exemption to the requirements of 10 CFR 70.24.

Because exemption from the requirements of 10 CFR 70.24(a) for DCPP Units 1 and 2 is authorized by law, will not endanger life or property or the common defense and security, is in the public interest due to the presence of special circumstances, and is requested for good cause, we respectfully submit that, in accordance with the requirements of 10 CFR 70.14(a) and 70.24(d), the NRC should grant the requested exemptions.