UNITED STATES
NUCLEAR REGULATORY COMMISSION
WASHINGTON, D. C. 20555

Docket File

June 15, 1989

Docket No. 50-374

Mr. Thomas J. Kovach
Nuclear Licensing Manager
Commonwealth Edison Company
P. O. Box 767
Chicago, Illinois 60690

Dear Mr. Kovach:

SUBJECT: ISSUANCE OF AMENDMENT NO. 48 TO FACILITY OPERATING LICENSE NPF-18
LASALLE COUNTY STATION, UNIT 2 (TAC NO. 62832)

The U.S. Nuclear Regulatory Commission has issued the enclosed Amendment No. 48 to Facility Operating License No. NPF-18 for the LaSalle County Station Unit 2. This amendment is in response to your letter dated September 16, 1986 supplemented August 18, November 5, 24, 1987, May 17, 1988, and June 6, 1989.

This amendment revises the LaSalle County Station, Unit 2 Technical Specifications to allow use of high density fuel racks in Unit 2.

A copy of the related Safety Evaluation supporting Amendment No. 48 to Facility Operating License No. NPF-18 is enclosed. The Notice of Issuance is being forwarded to the Office of the Federal Register for publication.

Sincerely,

Paul C. Shemanski

Paul C. Shemanski, Acting Director
Project Directorate III-2
Division of Reactor Projects - III,
IV, V and Special Projects

Enclosures:
1. Amendment No. 48 to License No. NPF-18
2. Safety Evaluation

cc w/enclosures:
See next page

DF01
1/1

~~April~~ 5, 1989

Docket No. 50-374

DISTRIBUTION

Docket file	TMeek (4)
NRC & Local PDRs	WJones
PDIII-2 r/f	EButcher
GHolahan	DHagan
MVirgilio	ACRS (10)
LLuther	GPA/PA
DMuller	ARM/LFMB
EJordan	Plant file
BGrimes	HKnox
PShemanski	OGC-WF

Mr. ~~Henry E. Bliss~~
Nuclear Licensing Manager
Commonwealth Edison Company
P.O. Box 767
Chicago, Illinois 60690

Dear Mr. Bliss:

SUBJECT: ISSUANCE OF AMENDMENT NO.46 TO FACILITY OPERATING LICENSE NPF-18
LASALLE COUNTY STATION, UNIT 2 (TAC NO. 62832)

The U.S. Nuclear Regulatory Commission has issued the enclosed Amendment No.46 to Facility Operating License No. NPF-18 for the LaSalle County Station Unit 2. This amendment is in response to your letter dated September 16, 1986 supplemented August 18, 1987.

This amendment revises the LaSalle County Station, Unit 2 Technical Specifications to allow use of high density fuel racks in Unit 2.

A copy of the related Safety Evaluation supporting Amendment No. 46 to Facility Operating License No. NPF-18 is enclosed. The Notice of Issuance is being forwarded to the Office of the Federal Register for publication.

Sincerely,

Paul C. Shemanski

Paul C. Shemanski, Project Manager
Project Directorate III-2
Division of Reactor Projects - III,
IV, V and Special Projects

Enclosures:
1. Amendment No. 46 to License No. NPF-18
2. Safety Evaluation

cc w/enclosures:
See next page

APH / Please make changes as shown to SER. APH

PDIII-2 P.S.	PDIII-2	OGC APH	PDIII-2
PShemanski:km	LLuther		DMuller
3/13/89	3/13/89	3/16/89	3/13/89

June 15, 1989

Docket No. 50-374

DISTRIBUTION

Docket file	EButcher
NRC & Local PDRs	DHagan
PDIII-2 r/f	ACRS (10)
MVirgilio	GPA/PA
LLuther	ARM/LFMB
EJordan	HKnox
BGrimes	OGC
PShemanski	Plant file
TMeek (4)	
WJones	

Mr. Thomas J. Kovach
Nuclear Licensing Manager
Commonwealth Edison Company
P.O. Box 767
Chicago, Illinois 60690

Dear Mr. Kovach:

SUBJECT: ISSUANCE OF AMENDMENT NO. 48 TO FACILITY OPERATING LICENSE NPF-18 LASALLE COUNTY STATION, UNIT 2 (TAC NO. 62832)

The U.S. Nuclear Regulatory Commission has issued the enclosed Amendment No. 48 to Facility Operating License No. NPF-18 for the LaSalle County Station Unit 2. This amendment is in response to your letter dated September 16, 1986 supplemented August 18, November 5, 24, 1987, May 17, 1988, and June 6, 1989.

This amendment revises the LaSalle County Station, Unit 2 Technical Specifications to allow use of high density fuel racks in Unit 2.

A copy of the related Safety Evaluation supporting Amendment No. 48 to Facility Operating License No. NPF-18 is enclosed. The Notice of Issuance is being forwarded to the Office of the Federal Register for publication.

Sincerely,

Paul C. Shemanski

Paul C. Shemanski, Acting Director
Project Directorate III-2
Division of Reactor Projects - III, IV, V and Special Projects

Enclosures:
1. Amendment No. 48 to License No. NPF-18
2. Safety Evaluation

cc w/enclosures:
See next page

*See previous concurrence

*PDIII-2	*PDIII-2	*OGC	*PDIII-2
PShemanski:km	LLuther		DMuller
3/13/89	3/13/89	3/16/89	3/13/89

Mr. Thomas J. Kovach
Commonwealth Edison Company

LaSalle County Nuclear Power Station
Units 1 & 2

cc:

Phillip P. Steptoe, Esquire
Sidley and Austin
One First National Plaza
Chicago, Illinois 60603

Assistant Attorney General
100 West Randolph Street
Suite 12
Chicago, Illinois 60601

Resident Inspector/LaSalle, NPS
U.S. Nuclear Regulatory Commission
Rural Route No. 1
P. O. Box 224
Marseilles, Illinois 61341

Chairman
LaSalle County Board of Supervisors
LaSalle County Courthouse
Ottawa, Illinois 61350

Attorney General
500 South 2nd Street
Springfield, Illinois 62701

Chairman
Illinois Commerce Commission
Leland Building
527 East Capitol Avenue
Springfield, Illinois 62706

Mr. Michael C. Parker, Chief
Division of Engineering
Illinois Department of Nuclear Safety
1035 Outer Park Drive, 5th Floor
Springfield, Illinois 62704

Regional Administrator, Region III
U. S. Nuclear Regulatory Commission
799 Roosevelt Road, Bldg. #4
Glen Ellyn, Illinois 60137

John W. McCaffrey
Chief, Public Utilities Division
SOIC
100 West Randolph Street
Chicago, Illinois 60601

UNITED STATES
NUCLEAR REGULATORY COMMISSION
WASHINGTON, D. C. 20555

COMMONWEALTH EDISON COMPANY

DOCKET NO. 50-374

LASALLE COUNTY STATION, UNIT 2

AMENDMENT TO FACILITY OPERATING LICENSE

Amendment No. 48
License No. NPF-18

1. The Nuclear Regulatory Commission (the Commission or the NRC) has found that:

   A. The applications for amendment filed by the Commonwealth Edison Company (the licensee), dated September 16, 1986 supplemented August 18, November 5, 24, 1987, May 17, 1988 and June 6, 1989 comply with the standards and requirements of the Atomic Energy Act of 1954, as amended (the Act), and the Commission's regulations set forth in 10 CFR Chapter I;

   B. The facility will operate in conformity with the application, the provisions of the Act, and regulations of the Commission;

   C. There is reasonable assurance: (i) that the activities authorized by this amendment can be conducted without endangering the health and safety of the public, and (ii) that such activities will be conducted in compliance with the Commission's regulations set fourth in 10 CFR Chapter I;

   D. The issuance of this amendment will not be inimical to the common defense and security or to the health and safety of the public; and

   E. The issuance of this amendment is in accordance with 10 CFR Part 51 of the Commission's regulations and all applicable requirements have been satisfied.

2. Accordingly, the license is amended by changes to the Technical Specifications as indicated in the enclosure to this license amendment and paragraph 2.C.(2) of the Facility Operating License No. NPF-18 is hereby amended to read as follows:

(2) Technical Specifications and Environmental Protection Plan

The Technical Specifications contained in Appendix A, as revised through Amendment No. 48, and the Environmental Protection Plan contained in Appendix B, are hereby incorporated in the license. The licensee shall operate the facility in accordance with the Technical Specifications and the Environmental Protection Plan.

3. This amendment is effective upon date of issuance.

FOR THE NUCLEAR REGULATORY COMMISSION

Paul C. Shemanski

Paul C. Shemanski, Acting Director
Project Directorate III-2
Division of Reactor Projects - III
IV, V and Special Projects

Enclosure:
Changes to the Technical
Specifications

Date of Issuance: June 15, 1989

ENCLOSURE TO LICENSE AMENDMENT NO. 48

FACILITY OPERATING LICENSE NO. NPF-18

DOCKET NO. 50-374

Replace the following page of the Appendix "A" Technical Specifications with the enclosed page. The revised page is identified by amendment number and contains a vertical line indicating the area of change.

REMOVE	INSERT
5-5	5-5

5.6 FUEL STORAGE

CRITICALITY

5.6.1.1 The spent fuel storage racks are designed and shall be maintained with:

a. A k_{eff} equivalent to $\leq$ 0.95 when flooded with unborated water, including all calculational uncertainties and biases, as described in Section 9.1 of the FSAR.

b. A nominal 6.26-inch center-to-center distance between fuel assemblies placed in the storage racks.

5.6.1.2 The k_{eff} for new fuel for the first core loading stored dry in the spent fuel storage racks shall not exceed 0.95 when flooded with water.

DRAINAGE

5.6.2 The spent fuel storage pool is designed and shall be maintained to prevent inadvertent draining of the pool below elevation 819 feet.

CAPACITY

5.6.3 The spent fuel storage pool is designed and shall be maintained with a storage capacity limited to no more than 4078 fuel assemblies.

5.7 COMPONENT CYCLIC OR TRANSIENT LIMIT

5.7.1 The components identified in Table 5.7.1-1 are designed and shall be maintained within the cyclic or transient limits of Table 5.7.1-1.

UNITED STATES
NUCLEAR REGULATORY COMMISSION
WASHINGTON, D. C. 20555

SAFETY EVALUATION BY THE OFFICE OF NUCLEAR REACTOR REGULATION

AMENDMENT NO. 48 TO FACILITY OPERATING LICENSE NO. NPF-18

COMMONWEALTH EDISON COMPANY

LASALLE COUNTY STATION, UNIT 2

DOCKET NO. 50-374

1.0 INTRODUCTION

By letter from C. M. Allen, Commonwealth Edison Company (CECo), to USNRC, dated September 19, 1986 Technical Specification changes were proposed for LaSalle County Station Unit 2 to allow use of high density spent fuel racks. The installation of these racks will extend full core discharge capability beyond the 1990 time frame. The LaSalle County Station Unit 2 received a full power operating license on March 23, 1984. At the time of licensing, the spent fuel pool contained sufficient storage locations to accommodate 1080 fuel bundles. With the existing storage racks, the ability to offload a full core will be lost in 1990. Consequently, the licensee proposed to re-rack the spent fuel pool in order to expand the spent fuel storage capacity. The new proposed high-density storage racks will increase the storage capacity of the spent fuel pool to 4078 fuel bundles and is projected to provide storage capacity until the year 2000 while still maintaining the ability to offload a full core. The licensee provided additional information in support of the re-rack request in submittals dated August 18, November 17, 24, 1987, May 17, 1988, and June 6, 1989.

2.0 EVALUATION

The licensee's submittals were reviewed in accordance with the requirements of General of Design Criteria 2, 44, and 61 and the guidelines of NUREG-0800, "Standard Review Plan," (SRP) and NUREG-0612, "Control of Heavy Loads at Nuclear Power Plants."

2.1 Decay Heat Generation Rate

The licensee stated in the September 19, 1986 submittal that the calculation of the decay heat generation rate was in accordance with the guidelines of NUREG-0800, Standard Review Plan, Section 9.1.3 and Branch Technical Position ASB 9-2. However, the licensee did not assume that the spent fuel pool was filled with spent fuel. For the normal maximum heat load case, the licensee assumed the pool is filled with one third core refuelings every 18 months except for 764 empty fuel storage locations which were reserved for the core offload, five empty defective fuel storage locations, and 189 additional empty locations. The licensee assumes that no fuel is moved from the reactor for the first 7 days (168 hours) after shutdown and has taken credit for moving fuel from the reactor to the spent fuel pool at a rate of 4 fuel bundles per hour. The abnormal maximum heat load case has the same assumptions as the normal maximum heat load case except the 764 empty fuel storage locations are filled with a full core offload. With these deviations from the guidelines, the

licensee calculated a heat generation rate of 13.98 MBtu/Hr for the normal maximum heat load case and 31.61 MBtu/Hr for the abnormal maximum heat load case.

The staff performed an independent calculation of the heat generation rate in accordance with the guidelines in the Standard Review Plan, Section 9.1.3 and Branch Technical Position ASB 9-2 assuming the anticipated 18-month operating cycle. The staff calculated a normal maximum heat generation rate of 17.6 MBtu/Hr and an abnormal maximum heat generation rate of 41.0 MBtu/Hr. The staff utilized these calculated values when assessing the adequacy of the spent fuel pool cooling system.

Because of the differences between the staff and licensee calculated heat generation rates, the staff performed additional calculations to verify the licensee's method of calculating the heat generation rate. The current reload batch was used as the verification point. The licensee calculated the heat generation rate for the current reload batch to be 10.02 MBtu/Hr. Based on the assumption that the entire reload batch enters the spent fuel pool instantaneously at 267 hours (the licensee's assumed 7 day delay in refueling plus one half of the licensee's anticipated refueling time), the staff calculated a heat generation rate for the current reload bath of 10.09 MBtu/Hr. Thus, the staff finds that the licensee has used an acceptable method for determining the spent fuel heat generation rate and that the difference between the licensee's values and those calculated by the staff are due solely to the assumptions used by the licensee.

2.2 Spent Fuel Pool Cooling System

The spent fuel pool cooling system (SFPCS) consists of two identical trains of equipment. Each train consists of one 3000 gpm centrifugal pump and one 14.6 MBtu/Hr tube-and-shell heat exchanger. After water from the spent fuel pool is cooled by the heat exchangers, it is purified by the spent fuel pool cleanup system. Neither the SFPCS nor the cleanup system are seismic Category I. In the event of an excessive heat load, the "B" loop of the Residual Heat Removal (RHR) system can be used to cool the spent fuel pool. The RHR system, including all piping to and from the spent fuel pool, is independent of the SFPCS and is seismic Category I.

2.2.1 Heat Removal Capability

Under the normal maximum heat load conditions (17.6 MBtu/Hr) and a single failure of one SFPCS train, the remaining SFPCS train will maintain the spent fuel pool water temperature below 126°F which is less than the 140°F temperature guideline specified in the Standard Review Plan, Section 9.1.3. For the abnormal maximum heat load condition (41.0 MBtu/Hr), one train of the SFPCS will maintain the spent fuel pool water temperature below 168°F which is below boiling. Thus, the staff finds that the SFPCS meets the requirements of General Design Criterion 44, "Cooling Water" with respect to providing adequate pool cooling.

2.2.2 Protection Against Natural Phenomena

2.2.2.1 Makeup Water

The SFP cooling capability is reviewed with respect to the requirements of General Design Criterion 2, "Design Bases for Protection Against Natural Phenomena," which includes protection against earthquakes, hurricanes, tornadoes, or other natural events. The SFPCS is not seismic Category I and it is not powered by a Class 1E source (i.e., on-site emergency diesel generator). Under such circumstances, SRP Section 9.1.3 identifies an alternative method for cooling of spent fuel following an earthquake.

Specifically, the SRP discusses use of a seismic Category I spent fuel pool makeup water capability and a seismic Category I ventilation system to process potential radiological releases to the pool building resulting from pool boiling. The LaSalle FSAR identifies the emergency fuel pool makeup system (EFPMS) as the seismic Category I makeup water system for the spent fuel pool. The EFPMS includes two 300 gpm pumps and is part of the seismic Category I core standby cooling system - equipment cooling water system (CSCS-ECWS).

2.2.2.2 Building Ventilation

With regard to qualified ventilation capability when seismic Category I spent fuel pool cooling is not provided, the LaSalle FSAR identifies the standby gas treatment system (SGTS) as the qualified ventilation system. The SGTS is designed to seismic Category I criteria and consists of two redundant filter trains. This system is designed to remain operational during design basis events and is protected against natural phenomena.

2.2.4 Loss of Cooling

In the event that all SFP cooling is lost, the spent fuel pool temperature will increase until boiling is achieved. The licensee has estimated the time from the loss of pool cooling until the pool boils (from an initial pool temperature of 120°F) for the normal maximum heat load case to be approximately 16.3 hours and for the abnormal heat load case to be approximately 4.9 hours. The calculated boiloff rates are estimated to be 28.9 gpm and 65.3 gpm, respectively. The staff finds that the EFPMS capability is in excess of those estimated boiloff rates, and there is reasonable time to take action to provide SFP makeup. The staff further concludes that the seismic Category I EFPMS and SGTS meet the requirements of GDC 2 for ensuring adequate spent fuel pool cooling and prevention of unacceptable radiological releases following an earthquake.

2.3 Heavy Load Handling

The new spent fuel storage racks weigh more than a fuel bundle, channel and its handling tool. Thus, the spent fuel storage racks are considered to be heavy loads. The reactor building crane will be used to move the storage racks within the reactor building and the spent fuel pool. As part of the previous staff review of compliance with guidelines of NUREG-0612, "Control of Heavy Loads at Nuclear Power Plants," the staff concluded in NUREG-0519, Supplement No. 5, dated April 1983 that the reactor building crane met the guidelines of NUREG-0612.

In the August 18, 1987 submittal, the licensee provided information which identified the path of travel for each of the fuel storage racks within the reactor building. The licensee stated that all Unit 2 fuel will be moved into the Unit 1 spent fuel pool prior to the re-racking of the Unit 2 pool. Therefore, no racks, either existing or new, will be carried over spent fuel or racks containing spent fuel. The licensee specifically indicated the heavy load handling paths and laydown areas for the storage racks. The licensee also indicated that one special lifting device will be used in the spent fuel pool re-racking procedure. By submittal dated November 24, 1987, the licensee provided drawings of the US Tool and Die spent fuel rack lifting rig which indicates redundancy in the lifting rig thereby satisfying staff guidelines. The staff finds that heavy load handling will be performed in accordance with the guidelines of NUREG-0612 and that the requirements of General Design Criterion 61, "Fuel Storage and Handling and Radioactivity Control," are met as they relate to proper load handling to ensure against an unacceptable release of radioactivity or a criticality accident as a result of a postulated load drop.

2.4 Criticality Aspects

The change to Section 5.6.1.1.b and 5.6.3 of the Technical Specifications would increase the number of fuel assemblies which could be stored in the spent fuel pool from 1,120 to 4,078 and change the storage cell spacing from 7 to 6.26 inches. Other previously approved specifications of Section 5.6 would remain unchanged. The change is based on the installation of an array of new fuel racks in the spent fuel pool which can provide the closer packing of fuel assemblies. Required criticality margins are maintained by incorporation of boron containing material in the rack design. This is a commonly used feature for high density rack design, and a large number of similar designs have been approved by the NRC.

The rack design and safety analyses, including nuclear criticality analyses, were provided by U.S. Tool and Die (USTD). They have previously provided the (similar) design and analysis methodology for the Nine Mile Point Unit 2 (9MP2) spent fuel racks. These were reviewed and approved by the NRC staff for the 9MP2 Final Safety Evaluation Report. The rack design is a rectangular array of storage cells configured so that there is boron, in the form of Boraflex sheets, between each pair of fuel assemblies. This includes Boraflex on the outer edge of racks, which is arranged so that there is boron between assemblies facing each other across rack to rack gaps. The B-10 loading of the Boraflex is 0.020 gm/cm^2 minimum and the cell pitch is 6.26 inches.

The criticality calculations for the racks were done using the LEOPARD/PDQ-7 code package. These programs were originally developed in the Naval Reactor Program, were further developed and used by Westinghouse and others, and have been a widely used industry standard methodology for the analyses of both reactor and fuel storage multiplication factors (k-infinity and k-effective) and reactivity changes as a function of component changes. LEOPARD is primarily used to generate cross sections for use in PDQ-7 diffusion theory calculations. This code package has been used for the criticality analysis of several staff approved fuel storage systems.

The methodology has been benchmarked against a number of relevant critical experiments covering a range of geometries and material compositions and fuel enrichments, and including poison sheets. These present geometrically representative configurations, many of which match those used to mockup fuel storage racks. In particular, they have included a series of criticals by Battelle Pacific Northwest Laboratories which are frequently used to check fuel storage calculations. USTD has used benchmark calculations of these Battelle experiments to develop analysis methodology bias and uncertainty factors to be added to k-effective calculations for the LaSalle Unit 2 racks.

USTD has also determined the potential variation of the rack and fuel parameters which are used in determining the k-effective of the rack-fuel system. These parameters include poison thickness, cell pitch, stainless steel thickness, fuel density and eccentric fuel position. (B-10 area density was used at the minimum specification value.) The variation of k-effective with these parameters (taken at a 95/95 probability/confidence level) was determined. These (independent parameters) were statistically combined with the methodology uncertainty to provide a delta-k uncertainty which was added to the base k-effective calculation.

USTD has investigated abnormal conditions which might be associated with the spent fuel pool and has determined that, with the exception of the placement of a fuel assembly outside and inmediately adjacent to the racks, such events, e.g., dropped fuel bundle or increased pool water temperature, have negligible or negative effects on k-effective. The effect of the external fuel assembly was calculated and included as a positive bias in determining the rack k-effective.

For the base case rack calculation the USTD mockup assumed (1) an infinite array of storage cells on a 6.26 inch pitch and with appropriate thicknesses of Boraflex, steel plates and water gaps between fuel assemblies, (2) typical General Electric 8x8 bundle fuel pin arrays with 62 3.416 percent U-235 enriched fuel pins and 2 water rods, (3) the bundle was unirradiated and contained no burnable poison, and (4) the pool water was 68°F.

For this base configuration, and adding reactivity value for assuming (conservatively) zirconium channels on the fuel bundle, axial end effects and corrections for cutouts in the Boraflex plates, the k-effective was calculated to be 0.9250. The total calculational bias and statistically combined calculational and mechanical uncertainty reactivity, 0.0093 delta-k, plus the external assembly accident reactivity, 0.0098 delta-k, was added to this to give a total k-effective of 0.9441. This is to be compared with an NRC required limit of 0.95.

USTD also carried out sensitivity calculations (in addition to those used to define mechanical uncertainty) to indicate the extent of the conservatisms in the base model. These included reactivity effects of typical multi-enrichment fuel pin distributions, typical burnable poisons in the fuel pins, and spacer grids. These calculations indicated a more realistic k-effective would be under 0.90.

The submittal also presented some results of calculations using an assembly k-infinity rather than the fuel enrichment approach. This can take direct advantage of the enrichment distribution and particularly the burnable poison and burnup reactivity effects, and has been used, e.g., by General Electric, for fuel storage analysis. However, there is insufficient information in the present submittal, particularly on uncertainty analysis, to consider judgments on this approach at this time.

2.4.1 Criticality Evaluation

The basic criticality design of the new racks, using boron lined cells to provide the appropriate neutron multiplication level for the closer packed array of high density racks, is a commonly used concept and has been accepted for many spent fuel storage pools. A design very similar in detail (and analysis) has been previously reviewed and accepted for Nine Mile Point 2. It is an acceptable design concept for maintaining criticality levels for the LaSalle Unit 2 pool.

The analytical methodology used by USTD to analyze the criticality and reactivity change characteristics of the racks is a standard methodology, commonly used and approved for other utilities for such analyses. The LEOPARD/PDQ-7 code package provides an acceptable methodology for base calculations and for sensitivity calculations. These methods have been benchmarked against an appropriate selection of critical experiments, with results falling within expected ranges of deviations from the experiments. The derivation of the uncertainty of the methodology from this benchmarking follows normal procedures and also falls within an expected range. It is acceptable.

The examination of uncertainties to be attributed to variances in dimensions and materials in the fuel and racks has covered an acceptable range of parameters and has used a suitable, standard methodology for determining reactivity effects and their statistical combination. The examination of the effects of abnormal conditions has covered the standard events relating to changes in temperature, movements, misplacement and dropping of assemblies and other equipment, and the results are reasonable and acceptable.

The model used for the base calculations is generally conservative, particularly in not including burnable poison effects. The base calculation and added factors for uncertainties, giving a total k-effective of 0.9441, are thus acceptable for a maximum average planar U-235 enrichment of 3.416 percent. (The analysis was for fuel with one axial enriched region with 6 inch natural uranium end regions, but the same limit would also apply, without further analysis, to newer fuel designs with multiple axial enrichment regions.) These calculations indicate a small margin to the staff required Technical Specification limit of 0.95 for the spent fuel pool, including uncertainties and biases. The results are acceptable.

Auxiliary calculations have indicated that a slightly higher enrichment, a little over 3.50 percent could be accommodated within limits, and that with a k-infinity approach an even higher enrichment could be considered. However, these increases are not directly part of this review and the above acceptance is limited to a maximum (planar) enrichment of 3.416 percent.

The only requested Technical Specification changes are to 5.6.1.1.b and 5.6.3, changing the storage cell pitch to 6.26 inches and increasing the allowed number of fuel assemblies in the spent fuel pool racks from 1120 to 4078. These are acceptable changes.

2.5 Radiological Aspects

The plan proposed by the licensee entails the transfer of all spent fuel modules from the Unit 2 pool into the Unit 1 pool through the connecting spent fuel cask pit. With the fuel removed from Unit 2 SFP, the licensee has two options for the actual reracking of the pool. Following decontamination and surveying the pool, replacement of the SFP racks can be accomplished under water with the use of divers (wet option) or the rerack can be completed with the pool drained (dry option).

Based on previous industry experience, the licensee has estimated the whole body radiation exposure to complete the rerack operation at 5 person-rem for the dry option, and 10 person-rem for the wet option.

Although the dry option would incur less direct radiation exposure, it involves a higher potential for generating airborne radioactive contamination. The methods proposed by the licensee to minimize the generation of airborne contamination include 1) decontamination of SFP surfaces, 2) keeping SFP surfaces wetted with pool drained, 3) provide a filtered enclosure for the SFP if necessary to contain the activity to the pool.

Based on our review of the LaSalle proposal, we conclude that the projected activities and estimated person-rem doses for this project are reasonable. CEC intends to take ALARA considerations into account and to implement reasonable dose-reducing activities. We conclude that CEC will be able to maintain individual occupational radiation exposures within the limits of 10 CFR Part 20 and maintain doses ALARA, consistent with the guidelines of Regulatory Guide 8.8. Therefore, the proposed radiation protection aspects of the SFP rerack are acceptable.

2.5.1 Accident Analysis

The staff has reviewed the accidental fission product releases that could occur at LaSalle Unit 2 in conjunction with the proposed reracking of the SFP. The staff finds that neither the reracking operation nor the increased density of fuel in the pool resulting from the proposed modification pose a new type of accident not previously considered nor do they effect the assumptions or results of the previous accident analysis.

2.5.2 Radiological Impact Assessment/Public Radiation Exposure

This section contains the staff's estimates of the impacts on the public from the proposed SFP modification. Major sources of radioactivity and principal environmental pathways were considered in preparing this section. Since the licensee is retaining the option of performing this modification with the SFP full or drained, the impact of both is considered.

2.5.2.1 Radioactive Wastes

The plant contains radioactive waste treatment systems designed to collect and process the gaseous, liquid, and solid waste that might contain radioactive material. The radioactive waste treatment systems are evaluated in the Final Environmental Statement (FES) dated November 1978 (US NRC 1978). There will be no change in the waste treatment systems described in the FES because of the proposed SFP rerack.

2.5.2.2 Radioactive Material Released to the Atmosphere

With respect to releases of gaseous materials to the atmosphere, the only radioactive gas of significance which could be attributable to storing additional spent fuel assemblies for a longer period of time would be the noble gas radionuclide Krypton-85 (Kr-85). Experience has demonstrated that after spent fuel has decayed four to six months, there is no longer a significant release of fission products, including Kr-85, from stored spent fuel containing cladding defects. To determine the average annual release of Kr-85, we assume that all of the Kr-85 released from any defective fuel discharged to the SFP will be released prior to the next refueling (typically 12 to 18 months). Enlarging the storage capacity of the SFP has no effect on the average annual quantities of Kr-85 released to the atmosphere each year.

Iodine-131 releases from spent fuel assemblies to the SFP water will not be significantly increased because of the expansion of the fuel storage capacity since the Iodine-131 inventory in the fuel will decay to negligible levels between refuelings.

Most of the tritium in the SFP water results from activation of boron and lithium in the primary coolant which will not be affected by the proposed changes. A relatively small amount of tritium is contributed during reactor operation by fissioning of reactor fuel and subsequent diffusion of tritium through the fuel and fuel cladding. Tritium release from the fuel essentially occurs while the fuel is hot, that is, during operations and, to a limited extent, shortly after shutdown. Thus, expanding the SFP capacity will not significantly increase the tritium activity in the SFP since the additional fuel stored in the expanded pool will be aged fuel.

Storing additional spent fuel assemblies is not expected to increase the bulk water temperature during normal refuelings above the value used in the design analysis. Therefore, it is not expected that there will be any significant change in the annual release of tritium or iodine as a result of the proposed modifications from that previously evaluated in the FES. Most airborne releases of tritium and iodine result from evaporation of reactor coolant, which contains tritium and iodine in higher concentrations than the SFP. Therefore, even if there were a higher evaporation rate from the SFP, the increase in tritium and iodine releases from the plant, as a result of the increase in stored spent fuel, would be small compared to the amount normally released from the plant and that which was previously evaluated in the FES.

Performing this modification with the SFP drained provides an increased potential for the generation of radioactive aerosols (airborne particulate). Additional controls have been proposed by the licensee to minimize the

generation of airborne radioactive particulates. In addition, the station Radiological Effluent Technical Specifications, which are not being changed by this action, limit the total gaseous and particulate materials released to the atmosphere. The increase in airborne radioactivity released from the plant due to the proposed action is expected to be less than 1 percent of the radioactivity that is released from the plant by this pathway during normal operation of the plant.

2.5.2.3 Solid Radioactive Wastes

The concentration of radionuclides in the pool water is controlled by the SFP cleanup system and by decay of short-lived isotopes. The activity is highest during refueling operations when reactor coolant water is introduced into the pool, and decreases as the pool water is processed through the SFP cleanup system. The increase of radioactivity, if any, due to the proposed modification, should be minor because of the capability of the cleanup system to continuously remove radioactivity in the SFP water to acceptable levels.

If the present spent fuel racks to be removed from the SFP of LaSalle, Unit 2 are contaminated, they may be disposed of as low level solid waste. Averaged over the lifetime of the station, this would increase the total waste volume shipped from the station by less than 1 percent. This will not have any significant additional environmental impact.

2.5.2.4 Radioactive Material Released to Receiving Waters

There should not be a significant increase in the liquid release of radionuclides from the plant as a result of the proposed modifications. Draining the pool to perform the reracking operation would be the only source of significant quantities of liquid radioactive waste. The slightly contaminated water in the SFP would be treated with the liquid radwaste system and released to the environment. After processing in the liquid radwaste system, the concentration of radioactivity would be a fraction of that allowed by 10 CFR Part 20. In addition the Radiological Effluent Technical Specifications that limit the release of radioactive material to the environment are not being changed by this action. The total activity released, as liquid waste, to the environment from this reracking operation is expected to be less than 1 percent of the radioactivity released in liquid form from the plant during normal operations.

2.5.3 Radiological Impact Assessment/Occupational Exposure

This section contains the staff's evaluation of the estimates of the additional radiological impacts on the plant workers from the proposed operation of the modified SRP.

The occupational exposure for the proposed modification of the SFP is estimated by the licensee to be less than 10 person-rems. This dose is less than 2 percent of the average annual occupational dose of 735 person-rems per unit per year for operating BWRs in the United States (US NRC 1988). The small increase in radiation dose should not affect the licensee's ability to maintain individual

occupational doses within the limits of 10 CFR Part 20, and is as low as is reasonably achievable. Normal radiation control procedures (US NRC 19810 and Regulatory Guide 8.8 (US NRC 1978) should preclude any significant occupational radiation exposures.

Based on present and projected operations in the SFP area, we estimate that the proposed operation of the modified SFP should add only a small fraction to the total annual occupational radiation dose at this facility.

Thus, we conclude that the proposed storage of spent fuel in the modified SFP will not result in any significant increase in doses received by workers.

2.6 Radioactive Waste Treatment Systems

From operating experience it is known that radioactivity releases from newly discharged spent fuel drop to insignificant level after the spent fuel has decayed in the SFP 4 to 6 months. The refueling cycle at LaSalle Unit 2 is 18 months, and during refueling one third of the core is discharged to the SFP. Therefore, every 18 months, LaSalle Unit 2 will discharge about one third of the core to the SFP which will release approximately the same amount of radioactivity regardless of the size of the SFP or the total spent fuel inventory.

LaSalle Unit 2 has been provided with radioactive waste treatment systems designed to collect and process the gaseous, liquid and solid wastes that might contain radioactive material. The radioactive waste treatment systems have been previously evaluated by the staff and found acceptable. There will be no change in the radioactive waste treatment systems as a result of the proposed installation of the new racks. Therefore, the staff finds that the proposed reracking and modifications to increase the spent fuel storage capacity will cause no significant additional environmental radiological impact.

2.7 Structural Design Aspects

This evaluation addresses the adequacy of the structural aspects of the proposed application. The Brookhaven National Laboratory (BNL) assisted the staff in reviewing various analyses and responses submitted by the licensee, and in auditing the methodology and sample calculations. Attached Appendix A is the technical evaluation report (TER) developed by BNL. The staff accepts the findings and conclusions of the TER by incorporating the TER as part of this evaluation.

There are two spent fuel storage pools at LaSalle Station. The proposed application is for reracking the spent fuel storage pool of Unit 2. The storage pool is 40 ft. 0 in. in east-west direction, and is 34 ft.0 in north-south direction with a curved containment wall cut out in the north wall. All reinforced concrete walls and the floor slab are 6 ft. 0 in. thick. The pool walls and floor slab are lined with 1/4 in. thick stainless steel liner to ensure the water thickness of the pool. Leak chases are provided to collect any potential leakage through the liner.

The proposed high density storage rack is a honeycomb configuration of identical stainless steel cells with sheet Boralfex poison material captured between the side walls of all adjacent cells. The individual cell is 6 inches square and has wall thicknesses of 0.09 in. The cells are held together with fusion welds. A total of 4073 individual storage spaces are arranged in 20 distinct rack modules of various arrays of fuel cells. Each rack is reinforced at the top corners walls. Each rack is supported by five pedestal supports; four corner adjustable pedestals and one in the center being a fixed (not adjustable) support. The racks are arranged with surface contacts between the reinforcing plates and gaps with walls varying from a minimum of 2 inches to a maximum of 4.25 inches. The rack modules and their supports are fabricated from ASTM A-240, Type 304 austenitic stainless steel sheet and plate materials.

The proposed application if the storage of a single fuel assembly in each storage location of the high density racks.

2.7.1 Structural Analysis

The primary areas of review associated with the proposed application are focused towards assuring the structural integrity of the fuel, fuel cells, rack modules, and the spent fuel pool floor and walls under the postulated loads (Appendix D of SRP 3.8.4) and fuel handling accidents. The major areas of concern and their resolutions are outlined in the following paragraphs.

a. Fuel Handling Building and Spent Fuel Storage Pool

The Fuel Handling Building analysis and design had been reviewed and accepted during the initial licensing stages. The pool floor slab and walls were reanalyzed to account for the added load of the fuel, the racks and the associated impact loads. The flow slab elevation is 804 ft. 9 in. The original licensee's reanalysis did not adequately consider the impact loads resulting from rack movements under a postulated seismic. event. The later reanalysis included these additional loads together with the hydrodynamic loads resulting from the rack movements. The stresses in the concrete and reinforcing steel at critical sections are found to be within the acceptable criteria. A detailed evaluation of the affected spent fuel components is provided in Appendix A.

b. High Density Racks

The seismic analysis of the free standing racks in the licensing report (dated September 16, 1986) was based on the two dimensional single rack seismic analyses for two horizontal direction and the equivalent static loads obtained from the vertical response spectra. The resulting codirectional loads and displacements were combined using the square root of the sum of the squares method. This method may provide bounding loads. However, it has been shown in prior licensing reviews that it would not be able to simulate the potential displacements (and resulting

impact, if any) of the free standing rack system. Later, the licensee performed three dimensional single rack analyses with three components of the postulated earthquake, acting simultaneously, and considering the bounding coefficients of friction of 0.2 and 0.8. The licensee also performed two dimensional analyses of a row of four racks with simultaneous input of a horizontal and vertical component of earthquake. The results of the later analyses have been used in assuring the adequacy of the rack system.

Major components of the rack are evaluated for the maximum stresses compared against the stresses allowable by the criteria in Appendix D of Standard Review Plant 3.8.4. A minimum ration of 1.1 against allowable was found for the fusion welds holding the cells together. In order to assure the rack integrity under resulting impact load, a separate finite element analysis of a rack subjected to impact load, discretely distributed over a portion of the rack, was performed by the licensee. The results of the analysis indicated that the rack cannot withstand such an impact load without significant deformation of the cell walls. The licensee decided to protect the potentially vulnerable portions of each rack by means of reinforcing plates.

The fuel rack system was also evaluated for the inadvertent drop of a fuel assembly during fuel handling operation. Two critical cases of fuel assembly drop were evaluated; (1) a straight drop of a fuel assembly on the top of the rack structure from 30 inch height, (2) a straight drop of a fuel assembly into the cell of the rack from 30 inch height above the top of the rack. Energy balance approach with conservative assumptions indicated that in case (1), the large plastic deformation would be limited to the rack module above the active fuel region, and in case (2), the liner plant would not be perforated. Such deformations are acceptable under this type of accident. A detailed evaluation of the analysis of high density racks is provided in Appendix A.

Based on its evaluation of the licensee's submittal, the supplementary information provided by the licensee, discussion with the licensee at meetings, and information audited by the staff and its consultant, the staff concludes that the licensee's structural analyses and design of the spent fuel rack modules and the spent fuel pool are in compliance with the acceptance criteria set forth in the FSAR and consistent with the current licensing practice and, therefore, are acceptable. It should be pointed out, however, that the installation of new racks (wet reracking) on the liner plate and additional bridge plates will require utmost care in levelling and spacing the racks in the desired configuration. A thorough review of the installation procedures and inspection of the installed racks is warranted.

It is recommended that the licensee develop walkdown procedures to be implemented after a seismic event equivalent to or exceeding the Operating Basis Earthquake (OBE). The walkdown should include the inspection of rack modules, their displacements, and assessment of damage (if any) to adjoining structures and components.

3.0 ENVIRONMENTAL CONSIDERATION

The Commission prepared an Environmental Assessment of the proposed action, which was noticed in the Federal Register April 3, 1989 (54 FR 13445) and has concluded that an environmental impact statement is not warranted because there will be no environmental impact attributable to the action beyond that which has been predicted and described in the Commission's Final Environmental Statement related to the Operation of LaSalle Station, Unit 1 and 2 dated November 1978.

The Commission published a Notice of Consideration of Issuance of Amendment and Opportunity for Prior Hearing (52 FR 43810) November 16, 1987. No hearing requests were received.

4.0 CONCLUSIONS

Based on its review of the proposed expansion of the spent fuel pool at LaSalle Unit 2, the staff concludes that:

1. The proposed expansion of the LaSalle Unit 2 spent fuel pool complies with the requirements of General Design Criteria 2, 44, and 61 and the guidelines of NUREG-0612, and the Standard Review Plan with respect to the capability to provide adequate spent fuel pool cooling and safely handle heavy loads. The staff, therefore, finds the proposed expansion to be acceptable.

2. The criticality aspects of the new spent fuel racks are acceptable.

3. The estimated additional radiation doses to the general public are much less than those incurred during normal operation of LaSalle County Nuclear Station. The licensee has taken appropriate steps to ensure that occupational dose will be maintained as low as is reasonably achievable and within the limits of 10 CFR Part 20. The total occupational dose estimated to be associated with the proposed modification of the expanded fuel pool is less than 10 person-rems, which is less than 2 percent of the average annual total occupational dose at the LaSalle County Station Unit 2. On the basis of the foregoing evaluation, it is concluded that there would be no significant additional environment radiological impact attributable to the proposed reracking and modification to increase the spent fuel storage capacity at the LaSalle County Station Unit 2.

4. There will be negligible increase in gaseous, solid and liquid radioactive material as a result of the spent fuel pool expansion itself, or the continued storage of additional fuel assemblies. There is no impact on the public since there is no increase in the calculated average annual quantities of Kr-85 released to the atmosphere. There will be adequate spent fuel pool cooling and proper heavy load handling to ensure against an unacceptable release of radioactivity or a criticality accident as a result of a postulated load drop.

5. The structural design, material compatibility and chemical stability are acceptable.

The staff has concluded, based on the considerations discussed above, that (1) there is reasonable assurance that the health and safety of the public will not be endangered by operation in the proposed manner, and (2) such activities will be conducted in compliance with the Commission's regulations and the issuance of this amendment will not be inimical to the common defense and security or to the health and safety of the public.

5.0 REFERENCES

U.S. Nuclear Regulatory Commission, 1978, "Final Environmental Statement Related to Operation of LaSalle County Nuclear Power Station Units Nos. 1 and 2," November 1978.

--- 1977, Regulatory Guide 1.109, Revision 1, "Calculation of Annual Doses to Man from Routine Releases of Reactor Effluents for the Purpose of Evaluating Compliance with 10 CFR Part 50, Appendix I," October 1977.

--- 1978, Regulatory Guide 8.8, revision 3, "Information Relevant to Ensuring that Occupational Radiation Exposures at Nuclear Power Stations Will Be as Low as Is Reasonably Achievable," June 1978.

--- 1981, NUREG-0800, "Radiation Protection," in: "Standard Review Plan," Chapter 12, July 1981 (formerly issued as NUREG-75/087).

--- 1988, NUREG-0713, Volume 7, "Occupational Radiation Exposure at Commercial Nuclear Power Reactors 1985," March 1988.

--- Letter (and attachments) from C. Allen, CECo, to H. Denton, NRC, dated September 19, 1986, "LaSalle County Station Unit 2 Proposed Amendments to Technical Specification...High Density Spent Fuel Racks."

--- PNL-2438, "Critical Separation Between Subcritical Clusters of 2.35 Wt% 235-U Enriched UO_2 Rods in Water with Fixed Neutron Poisons."

--- Letter from C. Allen, CECo to NRC, dated August 18, 1987, "LaSalle County Station Unit 2, Proposed Amendments to Technical Specification...High Density Spent Fuel Racks."

--- Letter from C. Allen, CECo to NRC, dated November 5, 1987, "LaSalle County Station Unit 2 Proposed Amendments to Technical Specification...High Density Spent Fuel Racks."

--- Letter from C. Allen, CECo to NRC, dated November 24, 1987, "LaSalle County Station Unit 2 Proposed Amendments to Technical Specification...High Density Spent Fuel Racks."

--- Letter from C. Allen, CECo to NRC, dated May 17, 1988, "LaSalle County Station Unit 2 Proposed Amendments to Technical Specification...High Density Spent Fuel Racks."

--- Letter from Wayne Morgan, CECo to NRC, dated June 6, 1989, "LaSalle County Station Unit 2 Proposed Amendments to Technical Specification... High Density Spent Fuel Racks."

Principal Contributors: J. Ridgely, SPLB/NRR
H. Richings, SRXB/NRR
R. Pedersen, PRPB/NRR
A. Chu, SPLB/NRR
P. Shemanski PDIII-2/NRR
H. Ashar, ESGB/NRR

Dated: June 15, 1989

APPENDIX A

TECHNICAL EVALUATION REPORT

EVALUATION OF THE HIGH DENSITY SPENT FUEL RACK STRUCTURAL ANALYSIS FOR COMMONWEALTH EDISON COMPANY LASALLE COUNTY STATION UNIT 2

NRC DOCKET NO. 50-374

By

J. Braverman

STRUCTURAL ANALYSIS DIVISION

DEPARTMENT OF NUCLEAR ENERGY

BROOKHAVEN NATIONAL LABORATORY

UPTON, NEW YORK

June 1989

Prepared for U.S. Nuclear Regulatory Commission

Office of Nuclear Reactor Regulation

FIN A-3841, Task No. 20, TAC No. 62832

Executive Summary

This report describes and presents the results of the BNL technical evaluation of the structural analysis submitted by Commonwealth Edison Company (CECo) in support of their licensing submittal on the use of high density spent fuel racks at LaSalle County Station (LSCS) Unit 2. The review was conducted to ensure that the racks meet all structural requirements as defined in the NRC Standard Review Plan and the NRC OT Position for Review and Acceptance of Spent Fuel Pool Storage and Handling applications.

The proposed high density spent fuel storage rack modification involves the installation of twenty free-standing, self-supporting modules of varying sizes arranged next to one another. Each rack module consists of individual cells of square cross-section, each designed to accommodate one fuel assembly. Since the racks are neither anchored to the pool floor or walls nor connected to each other, during an earthquake, the racks would be free to slide and tilt. Because of the nonlinear nature of this design, a time history analysis was required to characterize the seismic response of the fuel racks.

The BNL review focused primarily on the seismic analysis of the fuel rack modules because of the complexity of the analysis method and the number of simplifying assumptions that were required in developing the dynamic models. BNL also reviewed other analyses performed by the Licensee including fuel handling accident analyses, thermal analyses, and spent fuel pool analyses.

During the course of the review, a number of questions were raised regarding the adequacy of the fuel rack dynamic models. Concerns were raised that single rack models may underpredict seismic forces and displacements that would occur in the real multiple rack fuel pool environment. The use of a two-dimensional (2-D) model and analysis (E-W/vertical and then N-S/vertical to predict the non-linear response due to three perpendicular and simultaneous inputs was another major concern. Concerns were also raised regarding the adequacy of the fuel racks to sustain the calculated impact load. To address such concerns, the Licensee provided additional information and performed additional studies, including multiple fuel rack seismic analyses, to demonstrate the adequacy of the high density racks. The additional studies indicated that the forces from the multiple rack analyses were generally lower, however, forces and displacements from the 3-D single rack study were larger than the single rack design basis results. In spite of the larger forces and displacements the structural adequacy of the racks, fuel assemblies and pool structure was demonstrated. These results coupled with the conservatism present in the analyses demonstrate the adequacy of the fuel rack design.

Based on the BNL review of the Licensee's analysis, it is concluded that the proposed LSCS Unit 2 high density fuel racks and spent fuel pool are designed with sufficient capacity to withstand the effects of the required environmental and abnormal loads.

TABLE OF CONTENTS

1.0 INTRODUCTION

1.1 Purpose

This technical evaluation report (TER) describes and presents the results of the BNL review of CECo's licensing submittal on the use of high density fuel racks at LSCS Unit 2 with respect to their structural adequacy.

1.2 Background

Each of the LSCS units has a separate spent fuel pool to provide storage for irradiated spent fuel. This TER addresses LSCS Unit 2 spent fuel racks which are to be installed in the Unit 2 fuel pool located at elevation 804' - 9" of the reactor building. With the planned installation of the twenty racks, there will be a total capacity of 4073 cells and 5 defective fuel locations.

The proposed racks consist of individual cells of square cross-section, each of which accommodates a single BWR fuel assembly. The cells are assembled into distinct modules of varying sizes which are to be arranged within the existing spent fuel pool as shown in Figure 1. Each module is free-standing and self-supporting.

The Licensee provided a summary of his safety analysis and evaluation of the proposed racks in a Licensing Report (Ref. 1). The report described the structural analysis and design of the new fuel racks. It also gave a description of postulated dropped fuel and jammed fuel accident analyses.

The NRC initially reviewed the Licensing Report and generated a list of information needed to complete the review (Ref. 2). The Licensee provided the information and responses in a later submittal (Ref. 3a). The NRC then requested additional information in Ref. 4 which was responded to by the Licensee in Reference 3b. In addition to reviewing all of these submittals, BNL also participated in an audit of the fuel rack analyses at the offices of Sargent and Lundy Engineers, Chicago, Illinois. In addition, a meeting was held on May 31, 1989 at the NRC to resolve the remaining open items.

1.3 Scope of Review

The objective of the BNL technical review was to evaluate the adequacy of the Licensee's structural analysis and design of the proposed high density spent fuel racks and spent fuel pool. Due to the complex nature of the fuel rack seismic analysis, the primary focus of the review was on the adequacy of the non-linear fuel rack models and their dynamic analysis. The structural evaluation of fuel racks subjected to the dropped fuel and jammed

fuel handling accidents described in the Licensee's report (Ref. 1) were included in this review. However, the definition of these postulated accidents and their parameters (drop height, uplift force, etc.) were beyond the scope of this review. A limited review of the spent fuel pool was conducted to ensure that appropriate loads, methodology and acceptance criteria were applied.

2.0 ACCEPTANCE CRITERIA

The acceptance criteria for the evaluation of the spent fuel rack applications are provided in the NRC OT Position for Review and Acceptance of Spent Fuel Storage and Handling Applications (Ref. 5). Structural requirements and criteria given in this position paper were updated and included as Appendix D to Standard Review Plan 3.8.4, "Technical Position on Spent Fuel Pool Racks," (Ref. 6). These documents state that the main safety function of the spent fuel pool and fuel racks is to maintain the spent fuel assemblies in a safe configuration through all environmental and abnormal loadings, such as earthquakes, and impact due to spent fuel cask drop, drop of a spent fuel assembly, or drop of any other heavy object during routine spent fuel handling.

Section 2 of SRP 3.8.4, Appendix D gives the applicable Codes, Standards and Specifications. Construction materials should conform to Section III, Subsection NF of the ASME Code. Design, fabrication and installation of stainless steel spent fuel racks may be performed based upon the ASME Code Subsection NF requirements for Class 3 component supports.

Requirements for seismic and impact loads are discussed in Section 3 of Appendix D. It states that seismic excitation along three orthogonal directions should be imposed simultaneously for the design of the new rack system. Submergence in water may be taken into account. The effects of submergence are considered on a case-by-case basis. Impact loads generated by the closing of fuel assembly to fuel rack gaps during a seismic excitation should be considered for local as well as overall effects. It should also be demonstrated that the consequent loads on the fuel assemblies do not lead to fuel damage. Loads generated from other postulated events may be acceptable if sufficient analytical parameters are provided for review.

Loads and load combination requirements are provided in Section 4. Specific loads and load combinations are acceptable if they are in conformance with Section 3.8.4-II.3 and Table 1, Appendix D of the Standard Review Plan. Changes in temperature distribution should be considered in the design of the pool structure. Temperature gradients across the rack structure due to differential heating effects between a full and an empty cell should be incorporated in the rack design. Maximum uplift forces from the crane should be considered in the design.

Section 5 discusses design and analysis procedures. It states that design and analysis procedures in accordance with Section 3.8.4-II.4 of the Standard Review Plan are acceptable. The effects of gaps, sloshing water, and increase of effective mass and damping due to submergence in water should be quantified. Details of the mathematical model including a description of how the important parameters are obtained should be provided.

Structural acceptance criteria are provided in Section 6. The acceptance criteria are given in Table 1 of Appendix D. For impact loading, the ductility ratios utilized to absorb kinetic energy should be quantified. When considering seismic loads, factors of safety against gross sliding and overturning of the racks shall be in accordance with Section 3.8.5-II.5 of the Standard Review Plan unless it can be shown that either (a) sliding motions are minimal, impacts between adjacent racks and between racks and walls are prevented and the factors of safety against tilting are met, or (b) sliding and tilting motions will be contained within geometric constraints and any impact due to the clearances is incorporated.

3.0 FUEL RACK DESCRIPTION

The new high density spent fuel storage racks consist of individual cells with 6 inch by 6 inch nominal internal square cross-section, each of which accommodates a single General Electric BWR fuel assembly or equivalent, from either LSCS Unit 1 or Unit 2. A total of 4073 cells and five defective fuel storage cells are arranged in 20 distinct modules of varying sizes. The arrangements of the rack modules in the spent fuel pool is shown in Figure 1. A typical rack elevation is shown in Figure 2. The modules make nominal surface contact between reinforcing plates at the top corner of each rack. There are eleven different types of modules in the pool. Tables 1 and 2 summarize the physical data for each module type.

The rack modules and their supports are fabricated from ASTM A-240, Type 304 austenitic stainless steel sheet and plate material. The cells are held together with fusion welds. Boraflex serves as the neutron absorber material.

Each rack module consists of the following components:

- Internal square box
- Neutron absorber material (Boraflex) - between adjacent cells
- Boraflex sheathing-external cells only
- Baseplates
- Corner support assembly
- Center support assembly
- Reinforcement plates at the top for impacts

Figures 3 and 4 show a typical plan and elevation view, respectively, of a cell, showing the boraflex poison design.

The adjacent cells of each module are welded together through fusion welds. A 1/2" baseplate is welded to the bottom of each cell with 3/32 inch fillet welds. Each baseplate has a 4 1/8 inch diameter hole concentrically located with respect to each square tube. These holes provide the path for coolant flow.

Each module has five support legs. The corner supports are adjustable in length to enable leveling of the rack. The variable height support assembly consists of a flat-footed spindle which rides into an internally-threaded cylindrical member. The cylindrical member is attached to a 1/2" thick base and gussets to form the corner assembly. This assembly is attached to the underside of the rack module through fillet welds. Figure 5 shows a vertical cross-section of the adjustable support assembly. Figure 6 shows the center support leg which is not adjustable.

The support legs located near liner seams rest on 1" thick bridge plates on the spent fuel pool floor. Figure 7 shows these bridge plates which include a 12" span centered on the liner seam to protect the seam from movements of the rack feet.

4.0 TECHNICAL EVALUATION

4.1 Fuel Rack Seismic Analysis

The spent fuel storage racks are seismic Category I equipment required to remain functional during and after a safe shutdown earthquake (SSE). As described in Section 3.0, the proposed racks consist of 20 distinct free-standing modules which are neither anchored to the pool floor, attached to the side walls, nor connected to each other. Any rack may be completely loaded with fuel assemblies, partially loaded, or completely empty. The fuel assemblies are free to rattle within their storage cells.

Seismic forces are transmitted to the racks through friction at the support leg to pool floor interface. If seismic displacements are large enough, the racks can slide and the support legs can lift off and impact the pool floor. Because of these nonlinearities, a time history analysis of nonlinear rack models was required to characterize the seismic response of the fuel racks. BNL's review of the details of the modeling technique and analysis method is described in the following sections.

4.1.1 Dynamic Model

The design basis analysis is a 2-D single rack analysis described in the Safety Analysis Report (Ref. 1). During the review of the LSCS licensing report, concerns were raised that a 2-D single rack seismic analysis may not adequately predict rack

movements or forces. In response to questions regarding 3-D and multi-rack behavior, CECo provided additional analyses. Two types of confirmatory seismic analyses were performed for the LSCS high density spent fuel racks. A 3-D single rack analysis was performed that accounts for the effects of three simultaneous earthquake components. Separately, a 2-D multi-rack analysis was performed to predict the behavior of a row of racks. The 3-D single rack evaluation is discussed in this section while the 2-D multi-rack analysis is discussed in section 4.2.

The 3-D single rack analysis is discussed in this TER rather than the 2-D single rack analysis presented in Reference 1, because the generated loads and displacements are larger for the 3-D single rack analysis and because it serves as the most recent design check of the racks, fuel, and pool structure.

The mathematical model of the 3-D single rack module is shown in Figures 8 and 9. The stiffness of the rack elements are determined by calculation and tests. The analysis considers the Southwest corner rack number one. This rack was chosen because it is one of the largest racks. The fluid coupling for a corner rack is smaller than for an interior rack or edge rack. The smaller fluid coupling will promote larger rack movements and impacts. The rack is considered full of normal weight fuel.

The analysis was performed for a combination of SSE (identified as Design Basis Earthquake in FSAR) and SRV since the rack behavior is nonlinear and is controlled by the higher seismic levels. The rack to wall gaps considered are the nominal gaps shown on the rack layout drawings (in existence prior to the decision made to install the 1/4" reinforcement plates at the top of each rack). Gaps with adjacent racks are assumed to be 1/4" for fluid coupling calculations. Gaps with adjacent racks for impact are assumed to be 1/8" for impact calculations.

The 3-D single rack model consists of a center stick representing the rack and four sticks (one in each quadrant) representing the fuel. There are three levels of masses considered in the model for each of the sticks: one at the base level, one at rack midheight and one at the top of the rack. One quarter of the mass is lumped at the base, 1/2 at midheight and 1/4 at the top of the rack for rack, fuel, and fluid mass. The vertical component of fuel and rack mass is lumped at the base level including its representative rocking inertia. Impacts between fuel and rack, rack to rack, and rack to wall are considered at each of the mass levels also. The rack stick models the flexibility of the rack in flexure. The fuel sticks model the flexibility of the fuel in flexure. The members which connect the rack stick to the feet model the vertical flexibility of the rack. The four corner feet and the center feet are represented by springs which model the local vertical flexibility of the rack above the feet and the overall lateral flexibility of the rack. The feet springs are

attached to the rack stick with flexible elements which model the local flexibility of the rack.

The sliding-uplifting motions of the lower end of pedestals on the pool floor are modeled by plane contact surfaces. The contact conditions have the following properties.

- the points of contact are assumed not known apriori
- frictional sliding is modeled using Coulomb friction with a coefficient of friction
- repeated contact (impact) and separation (tension release) is permitted in any sequence.

Fluid coupling between rack and fuel assemblies, and between rack and adjacent racks or walls is simulated by including inertial coupling terms in the equations of motion. This is discussed in detail below. Fluid damping between rack and fuel assemblies, and between rack and adjacent racks is conservatively neglected in the model. In addition, the form drag opposing the motion of the fuel assemblies and the racks through the water is neglected.

In order to simulate the motion of adjacent fuel racks, the 3-D single rack model assumes a symmetry plane midway between adjacent racks. Thus, the model assumes that each adjacent rack moves completely out of phase with the rack being analyzed. This assumption is intended to predict conservative rack to rack impact forces.

The assumption that adjacent racks are vibrating 180 degrees out of phase seems to maximize the retarding effect of fluid forces and reduce the maximum impact velocities of the racks. However, the out of phase assumption results in numerous rack to rack impacts and is judged to cause the worst impacts based on the results obtained. If the racks are moving in phase, impacts will be reduced. Thus for maximizing impacts, this approach is acceptable. To address the potential for in phase movements of multiple racks, a separate multi-rack analysis for a row of four racks was performed (see section 4.2)

The replacement high density spent fuel racks will rest on bridge plates (Figure 7) on the pool floor. The bridge baseplates span seam welds on the pool floor. The bridge plates are not attached to the pool floor but have collars which engage the feet they support. The baseplates were not included in the rack model but were assumed to move with the rack. The baseplates are large enough to accommodate the possible slippage of the fuel racks during an earthquake without coming in contact with the liner seams.

Elastic coupling between the rattling fuel masses was used for the analyses. This elastic coupling represents the stiffness of the fuel skeleton and its effects on the coupling of the rattling masses. The fuel was modeled as two lumped masses at equally spaced elevations above the rack baseplate. The fuel-rack impacts would be expected to occur at the spacer grid locations and at the upper end fittings. The selection of only two impact locations combined with the assumption that all fuel assemblies move in-phase was judged to result in conservative fuel to rack impact loads.

4.1.2 Fluid Coupling Effects

The effects of submergence of the fuel racks in a pool of water has a significant effect on their seismic response. The dynamic rack model incorporated inertial coupling (fluid coupling) terms in the equations of motion to account for this effect. The rack and fuel model incorporates the inertial fluid coupling effects. Fluid coupling terms corresponding to fuel vibrating within the rack and rack vibrating within the adjacent pool walls and adjacent rack boundary are included in the equations of motion.

In the single rack analysis, the fluid coupling terms for fuel bundles within the rack cells were based on the methodology presented in Reference 7. In the case of the single rack vibrating within the adjacent walls and racks, because of unequal gap sizes and relative width to height ratio of the rack, it is difficult to determine an accurate flow pattern. Hence, for this case, the hydrodynamic coupling terms for relative motion between the rack and adjacent walls and rack boundary, was computed using a 3-D finite element fluid and rigid rack block model. ADINA (Ref. 8) was used for this purpose. The model took into account unequal gap sizes and both horizontal and vertical fluid flow and also took into account coupling between two horizontal directions of motion of the rack.

The use of the methodology presented by Dong in Reference 7 to calculate the fluid coupling for the fuel bundles within the rack cells considers fluid flow through the fuel bundles. This procedure is considered to be more realistic and is thus acceptable. The calculation for hydrodynamic coupling terms for relative motion between the rack and adjacent walls and rack boundary was questioned for its accuracy. The Licensee stated that the results of the ADINA 3-D finite element fluid and rigid rack model were compared to a simplified case in Fritz's paper (Reference 9), which is a common approach used by other plants to design their fuel racks. The results for the two methods were comparable and thus, the methodology used to calculate the hydrodynamic coupling terms is considered acceptable.

4.1.3 Friction Effects

Friction elements were used at the bottom of rack support leg elements of the model. The value of the coefficient of friction was based on documented test results given in Reference 10. The results of 199 tests performed on austenitic stainless steel plates submerged in water showed a mean value of coefficient of friction to be 0.503 with a standard deviation of 0.125. Based on twice the standard deviation, the upper and lower bounds are 0.753 and 0.253, respectively. Two separate analyses were performed for each load case with values of coefficient of friction equal to 0.2 (lower limit) and 0.8 (upper limit), respectively.

The use of both an upper and lower bounding value for the coefficient of friction is judged to be appropriate. Previous studies have indicated that low friction results in maximum sliding response of the racks while high friction results in maximum rocking or tilting response. Consideration of both cases should provide worst case displacements, stresses and impact loads.

4.1.4 Damping

Damping of the rack motion would develop from material hysteresis (material damping), structural deformation of the interconnected components (structural damping) and fluid damping effects. In the analyses of the LaSalle racks, a maximum of 4% structural damping was utilized during the SSE. This is within the values specified in the FSAR and USNRC Regulatory Guide 1.61 (Ref. 11). Other damping contributions are conservatively neglected.

Structural damping was included in all of the structural elements. The damping matrix [C] was formed by a linear combination of the structural mass matrix [M] and stiffness matrix [K] as follows:

$$[C] = \alpha [M] + \beta [K]$$

where α and β are related to the damping coefficient ($\lambda = 0.04$) and the frequency ω_i of the system by:

$$\lambda_i = \frac{\alpha}{2\omega_i} + \frac{\beta\omega_i}{2}$$

The values of α and β are selected such that for a frequency range of interest λ is equal or less than 0.04. The above methodology for treating damping represents an acceptable approach for the seismic analysis of the LSCS racks.

4.1.5 Seismic Input Motion

The seismic loads applied to the LSCS fuel rack model were

three acceleration time histories corresponding to the three global directions (North-South, East-West and Vertical). These motions were synthetically developed time histories which were based on the fuel pool design response spectra. The three time histories are shown in Figures 10 to 12 for the SSE load case. The artificial time histories were checked by the Licensee for statistical independence between the three motions.

To permit the use of the existing fuel pool design response spectra, the Licensee determined the increased mass of the new high density racks with fuel and compared it to the mass of the building structure. Since the increase in mass was small (approximately 1.5%), it was concluded that the increased mass due to the high density racks should not significantly affect the overall dynamic response of the building.

The "initial" 3-D single rack analysis conservatively used an envelope of vertical floor spectra which considered floor slab amplifications for all areas at the pool elevation. Since the pool slab frequency remains in the rigid range no additional amplification of pool responses will occur. Thus, a "refined" 3-D single rack analysis was run using the floor spectra at the wall thereby removing the conservatism in the vertical spectra. For other changes included in the "refined" 3-D model see section 4.3.

A comparison of the pool design response spectra and spectra generated from the synthetic time history was provided and reviewed. The broadened design spectra were used to make the comparison with the response spectra of the synthetic time histories. The comparisons for all three directions were very good.

Based on the Licensee's description and the information reviewed, the methodology used to develop the seismic input for the fuel rack seismic analysis is acceptable and consistent with industry practice.

4.1.6 Analysis Method

The analytical model described above was analyzed using ADINA (Ref. 8) computer code. The rack model was subjected to the loading caused by the simultaneous action of three components of earthquake motion at the fuel pool elevation and the dead load of the fuel rack system. The analysis procedure used the direct integration technique for solving the equation of motion. A time step increment of 0.002 second was used and determined to be small enough for the highest frequency of interest in the dynamic response of the fluid rack system. The solution to the dynamic equilibrium equations is obtained using the full Newton interaction with stiffness matrix reformatted at the beginning of each new time step and each iteration.

The public domain program ADINA was used to perform the 3-D single rack analysis. This program was verified by the supplier and by S&L under the requirements of S&L's QA program. This program has been used and reviewed/accepted by the NRC for fuel rack analysis on the Byron docket, 50-454.

4.1.7 Analysis Results

The ADINA program computed displacements and forces at each instant of time during the earthquake. Stresses for the rack were computed from maximum forces occurring in any one analysis. These stresses were checked against the design limits. The load combinations and acceptance limits were reviewed and were found to agree with those presented in Appendix D to Standard Review Plan 3.8.4 (Ref. 6).

Maximum calculated pedestal forces and maximum impact forces (rack to rack, rack to wall, and fuel to rack) are presented in Table 3. Forces, stresses, and safety factors at critical rack components are summarized in Table 4. Since the Southwest corner rack was analyzed and it impacted against the South wall and West wall, the maximum displacement of this rack was 5 1/4 inches in the West direction.

Information dealing with the potential damage to the fuel resulting from fuel to cell wall impacts was requested. The Licensee indicated that lateral and vertical impact between the fuel and the rack would not damage the fuel. The Licensee demonstrated that the fuel in the racks are subjected to smaller accelerations than the fuel in the reactor core.

4.1.8 Evaluation of Results

The results of the Licensee's seismic analysis indicated that all stresses in the racks would meet their allowables and impact loads on fuel assemblies would not damage the fuel. In addition, with the installation of reinforcement plates at the top corner of each rack (except those near the containment where the wall slopes away), the seismic analysis demonstrated that the structural integrity of the racks is maintained under the rack to rack and rack to wall impacts.

However, considering the potentially unconservative modeling assumptions regarding multiple rack behavior and out of phase motion between racks, the Licensee performed an additional analysis to address such concerns. This analysis is summarized in Section 4.2 and the overall assessment of the seismic analysis results is given in Section 4.5.

4.2 Multi-Rack Seismic Analysis

As a result of concerns related to the adequacy of a single rack model in predicting forces and displacements that would occur if multi-rack effects were considered, additional analyses were performed. A description of these additional analyses and their results are provided below.

4.2.1 Multi-Rack Model

This seismic analysis consists of a row of four racks to investigate the adequacy of the deign basis single rack models in predicting the response of fuel racks in the actual multi-rack fuel pool environment. An issue of particular concern was the possibility that in a multi-rack environment, a row of racks may pile up on one side of the pool and hit the wall with large impact forces. Although the walls were originally designed to accommodate seismic loads from the existing fuel racks, impact loads on the wall could damage the walls or liner resulting in unacceptable leakage of water from the pool.

The following provides a description of the modeling parameters used in the 2-D multi-rack analysis:

- The West row of racks that include rack numbers 1 through 4 were modeled and analyzed. This is an edge row so rack to rack fluid coupling is less than an interior row and displacements will tend to be larger.

- The following fuel loading was considered in the racks starting from the North wall: empty, half full, full, and three quarters full. This loading was selected to promote out of phase response and maximum rack displacement. Normal unchanneled fuel was considered in this analysis.

- The multi-rack analysis was performed for coefficients of friction of 0.2 and 0.8 to cover the lower and upper limits.

- The rack to wall gaps considered were the nominal gaps shown on the rack layout drawing (in existence prior to the decision of installing the reinforcement plates). Gaps with adjacent racks were assumed to be 1 inch for fluid coupling calculations and 1/4 inch for physical impact calculations between racks. The larger fluid coupling gap was selected to conservatively reduce fluid coupling effects and conservatively estimate impacts and displacements.

Sketches of the model are provided in Figures 13 and 14, and a description of the model is as follows:

The two-dimensional four rack model consists of, for each rack, a center stick representing the rack and one stick representing the fuel. There are six levels of masses considered in the model for each of the sticks, one at the base level and five above the base. One-tenth of the mass is lumped at the base, 1/5 at the next four levels, and 1/10 at the top of the rack for rack, fuel, and fluid mass. The vertical component of fuel and rack mass is lumped at the base level including its representative rocking inertia.

The fluid hydrodynamic coupling terms for relative motion between the rack and wall or adjacent rack are computed using the Fritz model. The fluid coupling terms for the fuel consider flow through the bundle and is based on Dong.

Potential impacts between fuel and rack, rack to rack and rack to wall are considered at each of the mass levels. Stiffness for the impact springs corresponds to the local flexibility of the rack and is calculated from test results. The rack stick models the flexibility of the rack in flexure. The fuel sticks model the flexibility of the fuel. The members which connect the rack stick to the base model the vertical flexibility of the rack. The four corner supports and the center support are represented by springs which model the local vertical flexibility of the rack and the overall lateral flexibility of the rack. The support springs are attached to the rack stick with flexible elements which model the vertical flexibility of the rack. Rack sliding is modeled by sliding surface at the base of the supports. The friction force is the concurrent normal force multiplied by the coefficient of friction at a specific time during the seismic event.

4.2.2 Multi-Rack Analysis/Results

The 2-D multi-rack model shown in Figure 14 was analyzed with the RACKOE computer program, which was developed and verified by U.S. Tool and Die (UST&D). The analysis was performed for the combination of SSE and SRV since the higher seismic level will control the dynamic response. The North-South time history and the vertical time history were applied simultaneously. These time histories are the same as those utilized for the initial 3-D single rack analysis (see section 4.1.5).

The key responses (pedestal forces, impact forces, and displacements are presented in Table 5. Comparisons with the initial 3-D single rack and refined 3-D single rack analysis are presented in Table 6. The comparison with the initial 3-D single rack model indicates that the forces are generally smaller for the multi-rack model. Comparison with the refined 3-D model indicates comparable pedestal forces and smaller impact forces for the multi-rack model. The comparison with the initial 3-D single rack model is more meaningful since they both used the same vertical dynamic

input while the refined 3-D model eliminated the conservatism in the vertical amplified floor spectra.

The impact forces for the multi-rack analysis were much smaller than the forces from the initial 3-D analysis and the refined 3-D analysis. This is probably due to having only a 2-D model and 2-D input time history. The addition of the third input simultaneously, would increase the response, particularly if tilting occurs about both horizontal axes thereby causing torsional rotation about the vertical axis as well.

A review of the displacement time history response did show movement for all four racks in the North direction until impact with the North wall occurred. In addition, the motion of the three racks having partial and full fuel assemblies were very similar indicating strong hydrodynamic coupling effects while the empty rack motion was more erratic with very little correlation to the other three rack motions.

4.3 Rack Impact Evaluation

A major concern which arose during the review of the rack responses was the extremely high rack to rack and rack to wall impacts. The initial 3-D single rack analysis calculated an impact force of 172 kips at the top of the rack for rack to wall impact. Since the rack rotated about its vertical axis, this impact force would be applied not as a uniform pressure across the face of the rack but as a line load. The resulting stresses would be quite high possibly exceeding the buckling stresses for the cell wall material.

Thus, the Licensee developed the "refined" 3-D single rack model to eliminate some of the conservatisms inherent in the "initial" 3-D model and thus obtain more realistic impact forces. The following improvements/revisions were incorporated into the "refined" 3-D model:

- The vertical response spectra at the pool wall was used as input rather than the envelope of amplified floor slab response spectra (see section 4.1.5). In addition, 4% damped spectra were used to develop the synthetic time history rather than the 2% damped spectra (conservatively used in the initial 3-D analysis as if it were 4% damped spectra).

- The gap springs between the rack to wall and rack to adjacent rack were distributed along the width of the rack at the top, middle and bottom elevations.

- The fuel mass was redistributed to account for the fuel being 13 inches below the top of the rack.

- The horizontal stiffness at the base of the rack was modified to account for the center pedestal (original total stiffness was based on the assumption that there are only four pedestals at the corners).

The results of this analysis are presented in Table 4. Comparisons with the "initial" 3-D analysis show total rack to rack impacts are about the same, while rack to wall impacts are lower for the "refined" 3-D analysis. The rack to wall impact at the top mass actually reduced substantially from 172 kips to 119 kips.

The rack to wall impact was judged to be more critical for the rack adequacy than the rack to rack impact since there is more flexibility in impacts between two racks. A detailed 2-D model representing the cells near the top of the rack was developed to analyze the local effects of the impact force. This model is shown in Figure 15. As a result of this analysis, the compressive stresses in some cell walls exceeded the allowable buckling stress. Thus, the Licensee proposed to install reinforcement plates as shown in Figure 16, to distribute the impact force over a sufficient number of cells where the compressive stresses are low enough.

These reinforcement plates will be installed at the top four corners of each rack except those next to the containment where the containment wall slopes away. The middle and bottom of the racks will not receive such plates because these areas are less critical. At the bottom elevation of the racks, there are 1/2 inch thick base plates in each cell which would transfer the load. In the middle of the rack, the full available cell length is engaged to resist the load with no "free end" effect which exists at the top. The continuity of the cell will result in a higher buckling capacity of the cell wall when compared to the top. In addition, there are a few other conservatisms inherent in the analysis which would reduce the calculated impact force (e.g. with the 1/4 inch plates, the angle of impact would be greatly reduced thereby distributing the force over more cells in the horizontal direction).

With the addition of the 1/4" thick reinforcement plates as shown on Figure 16, the impact capacity of the racks has been demonstrated to be acceptable.

4.4 Thermal Analysis

Weld stresses due to heating of an isolated hot cell were computed. The analysis assumed that a single cell is heated over its entire length to a temperature above the value associated with the adjacent cell. No thermal gradient was assumed in the vertical direction. Using a temperature differential of 36°F, weld stresses near the top of the cell were found to be below the allowable value.

4.5 Overall Evaluation of Seismic Analysis Results

Although the multi-rack analysis did not account for three-dimensional cross coupling effects, it is reasonable to judge that it captured the primary multi-rack response and it did provide the interaction forces and displacement behavior of a row of racks in one direction. Even with its limitations the multi-rack analysis has some conservatisms which include (1) fluid cross-coupling effects were not included, (2) friction effects between racks of adjacent rows during impacts were not included, (3) much larger vertical spectra, (4) all fuel assemblies at a given elevation vibrating in phase, and (5) no fluid damping.

The initial 3-D single rack analysis contains the same conservatisms listed above while the refined 3-D analysis for the single rack contains the same conservatisms less item 3. The design adequacy of the fuel racks subjected to the governing SSE load case has been shown to be adequate for the loads from all three models (multi-rack, initial 3-D single rack, and refined 3-D single rack) with the exception of impact loads. For consideration of impact loads, the conservatism in the vertical seismic spectra was removed, the single rack model was refined (distributed impact springs) and reinforcement plates at the top corner of each rack had to be added. This resulted in sufficient rack impact capacity for the calculated loads obtained from the refined 3-D model.

Based on the above discussion and the ample design margins shown in Table 4, it has been demonstrated that the racks meet the current licensing requirements. Therefore, it is concluded that during the SSE load case, the fuel racks will maintain their structural integrity and the fuel assemblies will not sustain damage.

4.6 Fuel Handling Accident Analyses

The Licensee performed structural analyses and evaluations for four postulated fuel handling accidents. The four types of fuel handling accidents considered are:

.1 Straight Fuel Drop Onto Top of Rack

A 680 pound fuel assembly dropping 30 inches on top of the rack was assumed. This input energy was used to calculate the plastic deformation in the cell walls based on actual cell box crush tests. Using this approach, the vertical plastic deformation was calculated at 2.7 inches. This limits the deformations at the very top away from the active fuel zone.

.2 Inclined Fuel Drop Onto Top of Rack

Since the inclined drop would distribute its impact over more than one cell, the plastic deformation for this case would be less severe.

.3 Straight Fuel Drop Through the Cell

This analysis concluded that the dropped fuel assembly would have sufficient energy to break the welds holding the individual cell baseplate to the cell. Although, the accident would render one storage cell location unusable, the Licensee concluded that the physical configuration of the spent fuel storage cell will not be changed. Therefore, the subcritical array of the rack would be maintained.

As for the pool liner, an analysis was performed to determine if the fuel drop would penetrate the pool liner. This analysis was conservatively performed since the velocity of impact was calculated neglecting the negating effects of buoyancy, skin friction, and stagnation drag force. In addition, the energy dissipated due to deformation of the fuel assembly was neglected. If the liner plate alone was considered, the fuel assembly would penetrate the plate. However, the formulation took advantage of the concrete beneath the liner plate to successfully demonstrate that the liner plate would not be penetrated.

.4 1200 Pound Uplift Due to Fuel Jamming

A 1200 pound uplift force and a 1200 pound plus one fuel assembly weight downward force were each applied to a single cell separately. The most critical stress was calculated to be 1,231 psi (in the welds) which is well below the allowable value.

Based upon the above discussion and review of the general methodology, the structural adequacy of the racks and pool liner under the postulated fuel handling accidents has been adequately demonstrated.

4.7 Spent Fuel Pool Analysis

The LSCS pool was initially evaluated for the increased loads from the new fuel racks by Stone & Webster (SWEC). Sargent and Lundy (S&L) performed an independent evaluation of the pool and evaluated impacts and fluid coupling forces on the pool. This includes an evaluation of rack impacts on the pool structure. The SWEC evaluation is described first and then the S&L independent evaluation is described.

4.7.1 Loads and Load Combinations

The following design loads were considered in the reanalysis of the spent fuel pool.

- Normal operating and accident temperature loading including thermal gradient loads.
- Dead loads including spent fuel, fuel racks, cask storage, self weight of structure and hydrostatic pressure.
- Live loads from adjacent slabs.
- Hydrodynamic forces and excitation of dead load for OBE, SSE, SRV and LOCA.

The above loadings were combined using load combinations per LSCS Mark II D.A.R. Table 4.3-1. Additional loading combinations were also evaluated deleting only the thermal load from any of the above load combinations.

The acceptance criteria and the allowable stresses are shown in LSCS Mark II D.A.R. The resulting stresses were evaluated against the following acceptance criteria:

- Maximum allowable steel stress = 54 ksi
- Maximum allowable concrete compressive stress = 3.825 ksi

4.7.2 Spent Fuel Pool Structure Analysis (SWEC)

The pool was analyzed by SWEC by the finite element method of analysis using the ANSYS computer program. The pool slab and walls were modelled using 3-D isoparametric solid elements in three layers. Appropriate boundary conditions were imposed on this model to adequately represent the effects of the unmodelled portions of the structure.

The assumptions made in the analysis were:

1. The boundary at the containment was considered fixed for the purpose of obtaining maximum loads at the boundary.
2. The spent fuel and the rack loads were uniformly distributed over the pool slab.
3. Maximum stresses in the pool were obtained by enveloping the results of the analysis considering the boundary at the containment as fixed and as hinged.

4. A cracked section analysis was performed for thermal loads only. Analysis for mechanical loads conservatively considered an uncracked section.

5. The model included the entire spent fuel pool and up to the centerline of adjoining new fuel storage pool with appropriate boundary conditions to simulate the continuity of the entire structure.

6. Following ACI 349-85, App. B, thermal loads were not included where they reduced stresses.

The analysis for the mechanical loads was performed using an uncracked model. The SWEC analysis concluded that the fuel structure could accommodate the design basis loads including those resulting from the replacement racks.

4.7.3 Spent Fuel Pool Structure Analysis (S&L)

S&L performed an independent evaluation of the LSCS pool for the high density spent fuel rack loads including rack fluid coupling forces and wall impacts. This evaluation considered the critical section identified by SWEC in their evaluation and sections determined to be critical in the initial pool design. The critical sections are shown in Figure 17. The evaluation considered the load combinations shown in the FSAR and the DAR including the load combinations determined to be critical by SWEC in their evaluation.

The S&L evaluation accounted for the redistribution of moment that would occur due to cracking of the periphery of the pool slabs where high moments occur. This effect was conservatively neglected in the SWEC evaluation. The assumed amount of cracking was confirmed to be appropriate based on the cracked concrete section analysis results.

The fuel pool design basis finite element model was utilized for the S&L evaluation. The pool slab and walls were modeled utilizing a mesh of quadrilateral plate elements. The finite element SLSAP model incorporating the cracked concrete section was used for the analysis of dead weight and seismic loads from the rack and the impact load on the floor slab.

The programs used in the S&L evaluation were SLSAP and TEMCO. These programs have been reviewed and accepted by the NRC in previous similar applications.

The latest pool structure analysis considered the rack impact loads from the 3-D single rack analysis. These loads on the wall and slab were applied at critical sections to produce maximum effects on the pool structure.

Table 7 summarizes the results of the S&L evaluation. The S&L independent review concluded that the SWEC evaluation of the pool yielded the appropriate critical section and load combination and provided very conservative stress results. Considering moment redistribution based on cracking yields a more accurate picture of pool stress and shows from Table 7 a factor of safety of 1.15 above allowable stresses. The stresses and safety factors shown on the table include the effects of any one fuel rack impacting the wall or the slab in combination with the appropriate loads in the critical load combination at a given critical section under consideration.

The results of the evaluations performed by SWEC and S&L provide good assurance that the pool structure is capable of supporting the new high density racks filled with normal weight fuel.

5.0 CONCLUSIONS

With the addition of reinforcement plates at the four top corners of each rack, the impact capability of the racks has been demonstrated. All critical stresses in the racks have been shown to be less than the allowable values. It has also been shown that impact loads generated between the fuel assemblies and cell walls would not lead to damage. Furthermore, it has been demonstrated that the existing spent fuel pool has adequate capacity to accommodate the loads resulting from the high density racks and fuel assemblies.

Based on the review and evaluation of the Licensing Report, additional analyses and information provided by the Licensee during the course of this review, and the above discussion, it is concluded that the proposed LSCS Unit 2 fuel racks and pool structure have sufficient structural capacity to withstand the effects of all required environmental and abnormal loadings discussed in this report.

6.0 REFERENCES

1. Commonwealth Edison Company (CECo) letter, "LaSalle County Station Unit 2 Proposed Amendments to Technical Specification for Facility Operating Licensee NPF-18 High Density Spent Fuel Racks NRC Docket No. 50-374," dated 9/19/86.

2. NRC letter to CECo, "Additional Information on Re-Racking of Spent Fuel Pool - LaSalle County Station, Unit 2," E.G. Adensam to D.L. Farrar, dated 11/28/86.

3a. CECo letter to NRC, "... High Density Spent Fuel Racks NRC Docket No. 50-374, C.M. Allen to USNRC, dated 8/18/87.

3b. CECo letter to NRC, "... Response to NRC Request for Additional Information; High Density Spent Fuel Racks NRC Docket Nos. 50-373 and 50-374," W.E. Morgan to USNRC, dated 6/6/89.

4. NRC letter to CECo, P.C. Shemanski to H.E. Bliss, dated 4/18/89.

5. USNRC letter to all power reactor licensees, from B.K. Grimes, dated April 14, 1978, "OT Position for Review and Acceptance of Spent Fuel Storage and Handling Applications," as amended by the NRC letter dated January 18, 1979.

6. US Nuclear Regulatory Commission, "Standard Review Plan for the Review of Safety Analysis Reports for Nuclear Power Plants," NUREG-0800, Section 3.8.4, Revision 1, July, 1981.

7. R.G. Dong, "Effective Mass and Damping of Submerged Structures" Lawrence Livermore Laboratory, UCRL-52342, April 1, 1978.

8. ADINA Engineering Report AE 84-1 S&L Program No. 09.7.199-3.0.

9. R.J. Fritz, "The Effects of Liquids on the Dynamic Motions of Immersed Solids," Journal of Engineering for Industry, Transactions of the ASME, February, 1972, pp 167-172.

10. E. Rabinowicz, "Friction Coefficients for Water Lubricated Stainless Steels for a Spent Fuel Rack Facility," a Report for Boston Edison Company, MIT, 1976.

11. US Nuclear Regulatory Guide 1.61, "Damping Values for Seismic Design of Nuclear Power Plants," October 1973.

TABLE 1
TABLE OF RACK DATA

Rack Number	Number of Racks	Number of Cells In N-S Direction	Number of Cells In E-W Direction	Total Number Of Cells Per Module
1	1	16	15	234(1)
2,3	2	16	15	240
4	1	16	15	217(2)
5	1	15	17	235(3)
6	1	15	15	225
7,10,11,14,15	5	13	15	195
8,16	2	15	15	202(4)
9,12,13	3	12	15	180
17	1	12	15	174(5)
18,19	2	14	15	202(6)
20	1	13	15	185(7)

(1) Total cells equals 16x15 less 3x2
(2) Total cells equals 16x15 less 3x5, 1x3, 1x1, 2x1, 1x2
(3) Total cells equals 15x17 less 10x2
(4) Total cells equals 15x15 less 2x8, 1x3, 1x4
(5) Total cells equals 12x15 less 3x2
(6) Total cells equals 14x15 less 2x4
(7) Total cells equals 13x15 less 5x2

TABLE 2

RACK DIMENSIONS AND WEIGHTS

Rack Number	Approximate Nominal Cross-section Dimensions (inches)		Estimated Dry Weight (LBS) Per Rack
	N-S	E-W	
1	100.3	94.0	28,890
2,3	100.4	94.0	29,570
4	100.3	93.9	26,880
5	93.9	93.9	28,990
6	93.9*	93.8	27,800
7,10,11,14,15	93.9	81.4	24,900
8,16	94.0	93.8	25,110
9,12,13	75.2	93.9	22,540
17	74.9	94.2	21,830
18,19	87.5	94.0	25,110
20	81.3	93.9	23,120

TABLE 3

REFINED 3-D SINGLE RACK

Maximum Pedestal Forces

Friction Coefficient		Axial Force (kips)	Shear Force (kips)
μ = 0.2	Foot	207	38
	Rack	192	
μ = 0.8	Foot	247	174
	Rack	231	

Maximum Impact Forces

Friction Coefficient	Location	Rack to Rack (kips)	Rack to Wall (kips)	Fuel to Rack (kips/Fuel)
μ = 0.2	Upper	117	119	0.34
	Middle	220	228	0.42
	Bottom	209	221	N/A
μ = 0.8	Upper	98	119	0.36
	Middle	166	179	0.45
	Bottom	154	163	N/A

TABLE 4

REFINED 3-D SINGLE RACK

MAXIMUM SSE LOADS, STRESSES AND SAFETY FACTORS
FOR 240-CELL RACK COMPONENTS WITH STANDARD FUEL

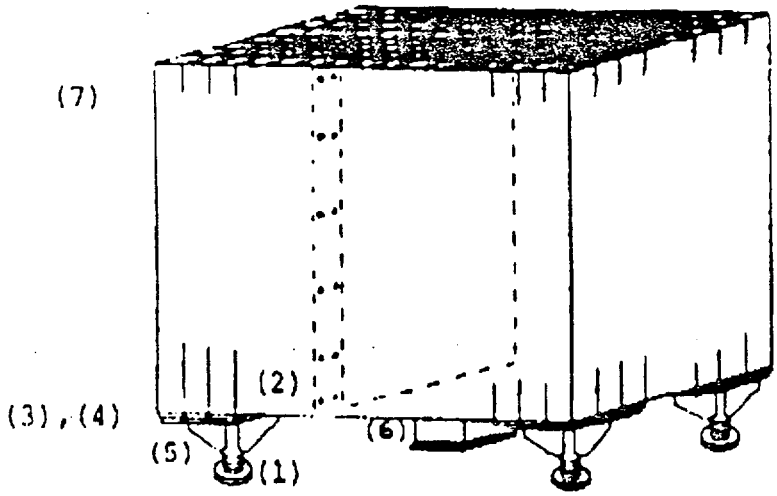

LOC.	COMPONENT DESCRIPTION		REVISED 1-RACK 3-D MAX. LOAD (KIPS)	MAX. STRESS (KSI)	ALLOW-ABLE STRESS (KSI)	MIN. SAFETY FACTOR
1	THREAD REGION		247.0	5.07	24.22	4.78
2	FUSION WELD*	V H	214.4 173.7	17.86	29.06	1.63
3	BASEPLATE TO CELL WALL	V H	247.0 173.7	26.15	29.06	1.11
4	PED PLATE TO BASEPLATE WELD	H	173.7	16.80	29.06	1.73
5	GUSSET PLATE	V H	247.0 173.7	20.20	36.0	1.78
6	CENTER PED TO CELL WALL	V H	36.3 23.4	13.09	29.06	2.22
7	FUEL TO RACK IMPACT		.223	20.37	28.8	1.41

* Considers vertical shear, thermal shear, and impact shear

TABLE 5

MULTI-RACK SEISMIC ANALYSIS RESULTS

(KIPS & INCHES)

Component	Rack 1	Rack 2	Rack 3	Rack 4
Axial Force on Foot	191.0	236.5	208.8	174.0
Shear Force on Foot	152.5	153.9	191.8	139.1
Rack to Rack Impact	25.8	18.8	12.9	
Rack to Wall Impact				33.8
Displacement	1.5	1.66	1.55	2.77

Minimum rack factor of safety - Fusion weld = 1.14

TABLE 6

COMPARISON OF RESULTS

	INITIAL 3-D SINGLE RACK	REFINED 3-D SINGLE RACK	MULTI-RACK
AXIAL FORCE ON FOOT (KIPS)	555	247	334
SHEAR FORCE ON FOOT (KIPS)	82	174	217
*RACK TO RACK IMPACT (KIPS)	520	546	155**
*RACK TO WALL IMPACT (KIPS)	680	568	203**
***DISPLACEMENT (IN.)	5.25	5.25	2.77

* This represents total impact over entire rack height.

** This was conservatively calculated as no. of mass levels (=6) times the maximum impact occurring at any one mass level.

*** In all three cases the maximum displacements correspond to sliding until impact occurs with adjacent fuel pool walls.

TABLE 7

Spent Fuel Pool Structure
Maximum Tensile and Compressive Stress Summary
For Design Basis, SRV and LOCA Load Combinations

Section	Rebar			Concrete	
	Max Tensile Stress (ksi) Horizontal	Vertical	Safety Factor	Max. Compressive Stress (psi)	Safety Factor
19	23.1	46.9	1.15	2,344	1.63
20	45.0	18.9	1.20	2,651	1.44
21	44.8	39.4	1.20	2,600	1.47

1. Allowable Stress = Concrete : 0.85 f'c = 3825 psi
   Rebar : 0.90 Fy = 54 ksi
2. See Figure 17 for locations of the sections.
3. Sections 20 and 21 are slab sections where, Horizontal = NS
   Vertical = EW
4. Safety Factor = Allowable Stress/Actual Stress
5. Minimum safety factor for pool structure for shear = 1.31
6. Minimum saftey factor for Normal Load Combination = 1.53

FIGURE 1

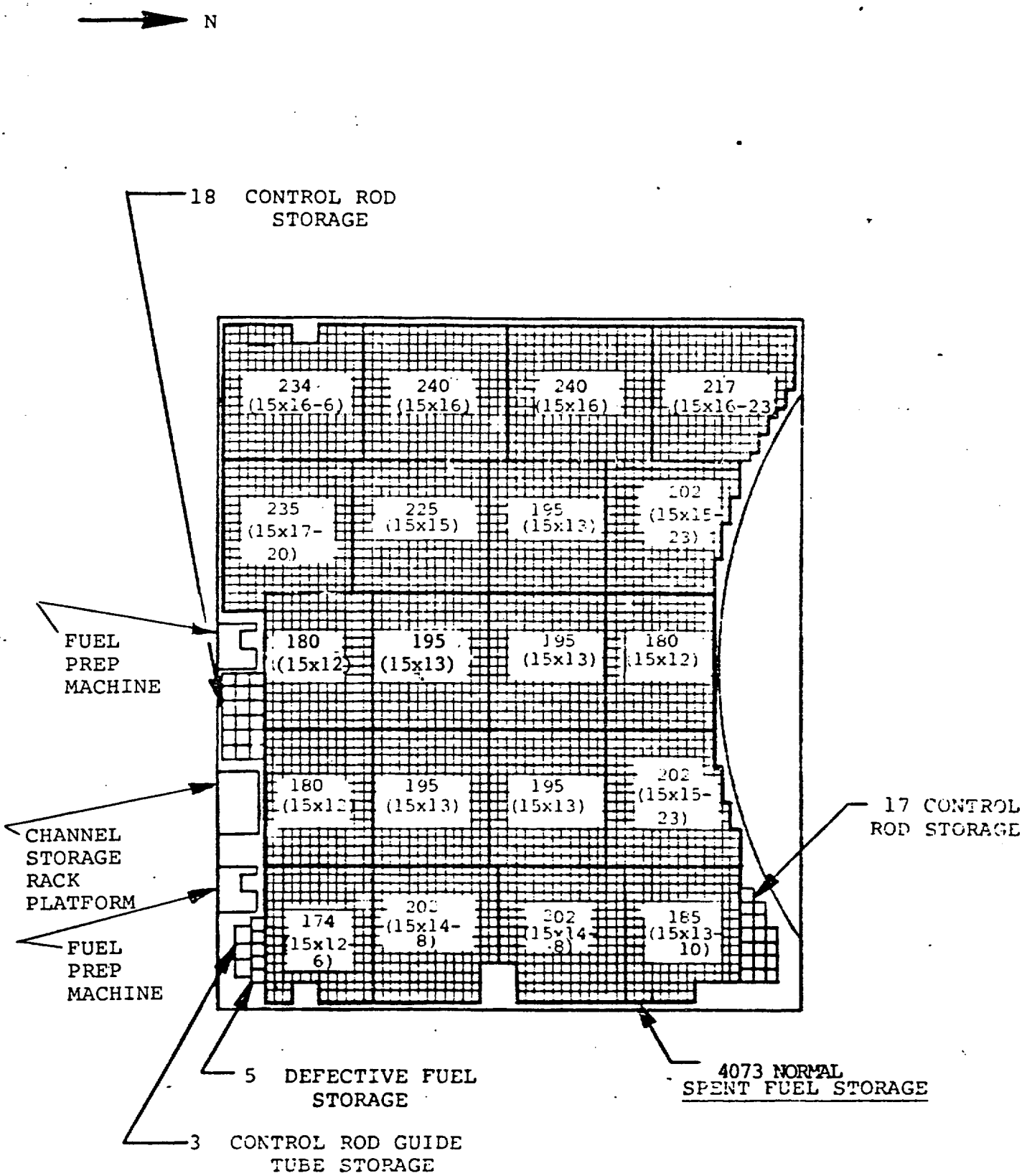

PLAN ARRANGEMENT OF LASALLE COUNTY STATION UNIT 2

FIGURE 2

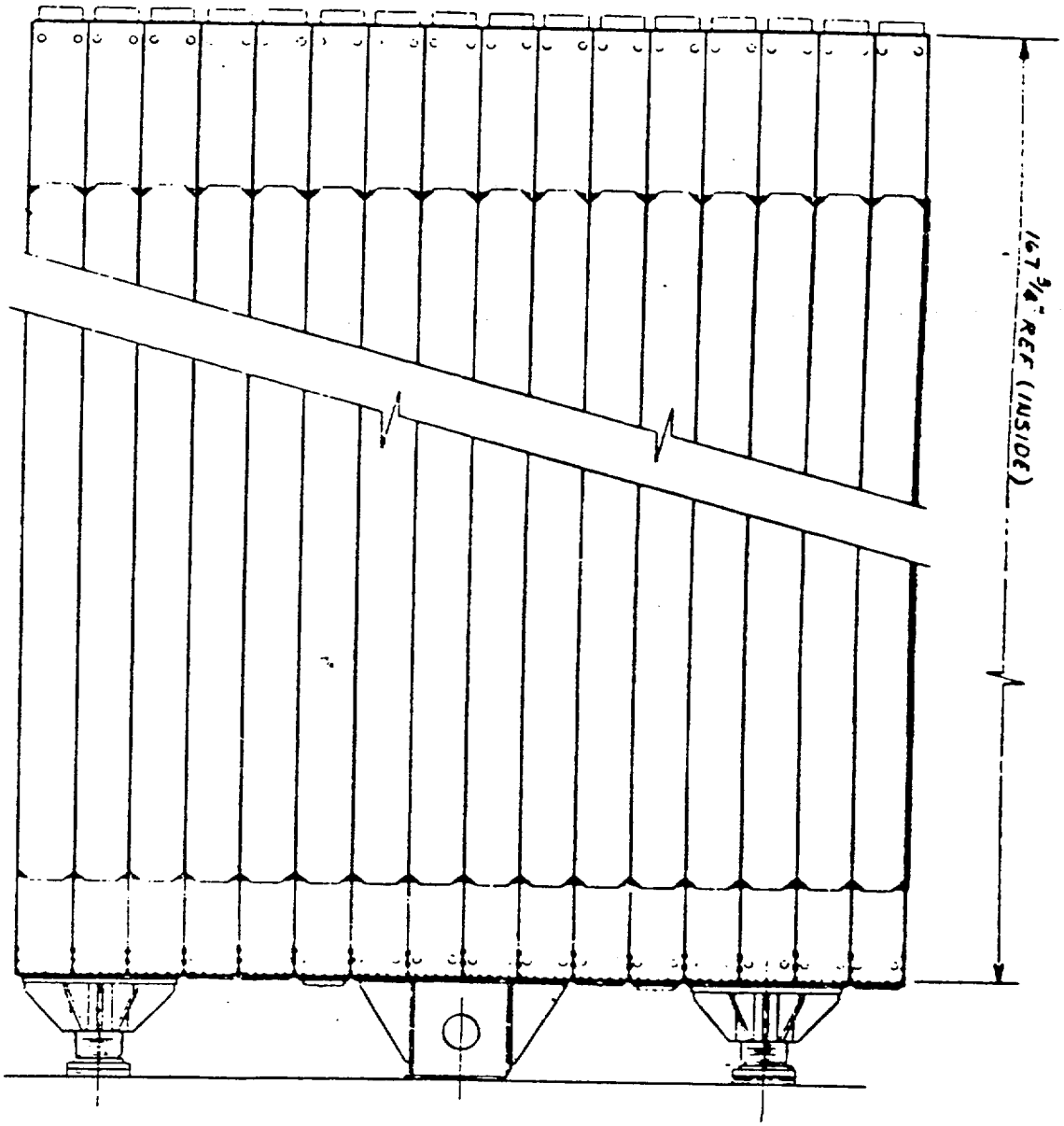

TYPICAL RACK ELEVATION

FIGURE 3

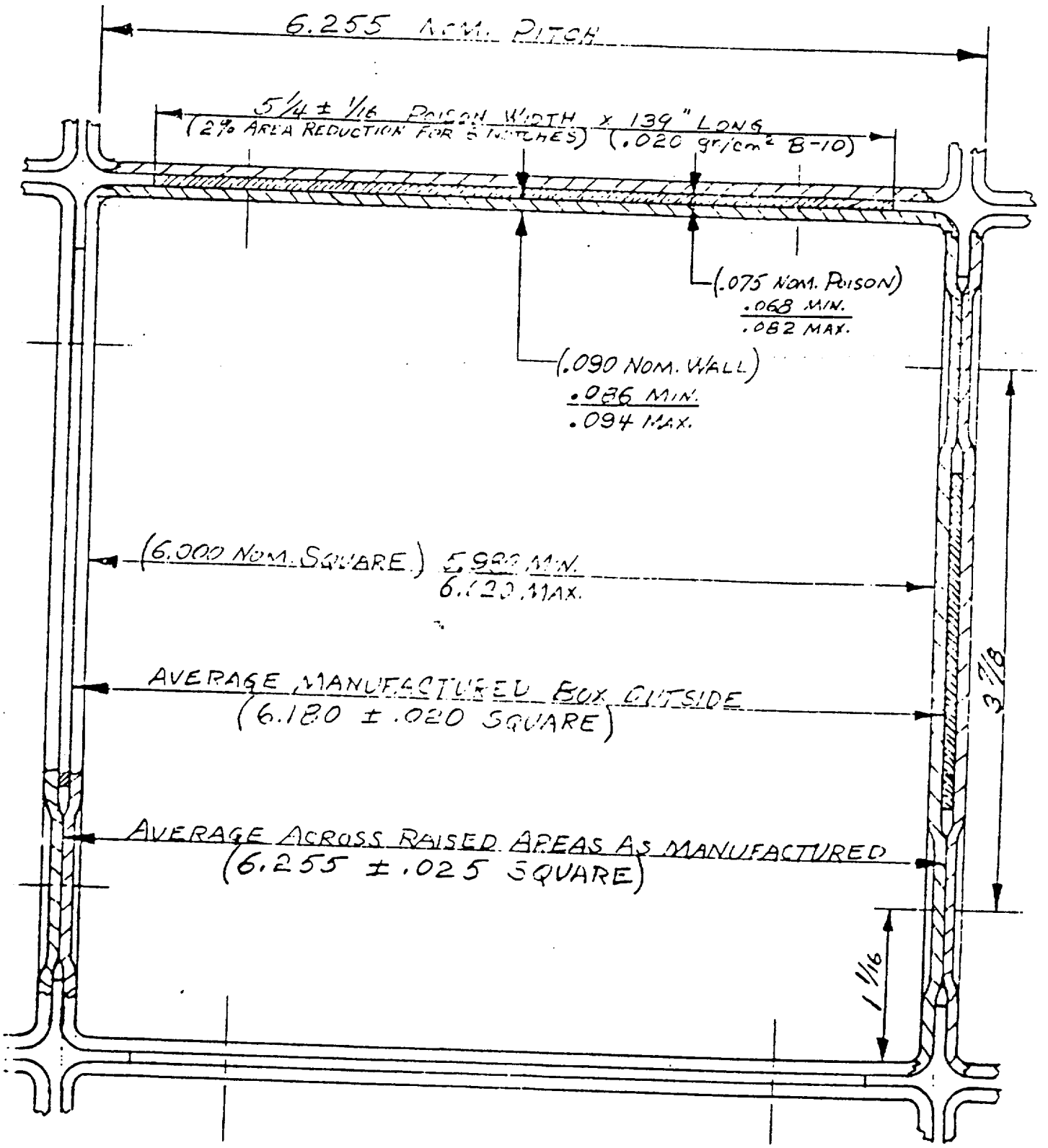

TYPICAL CELL PLAN

FIGURE 4

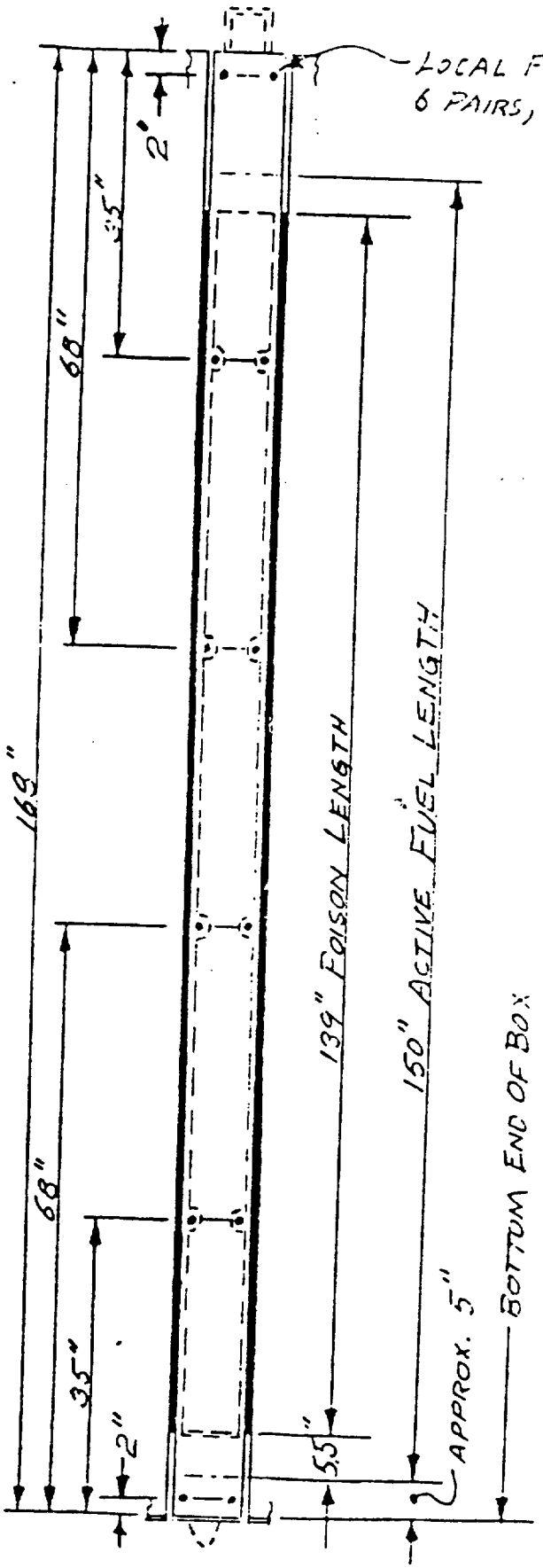

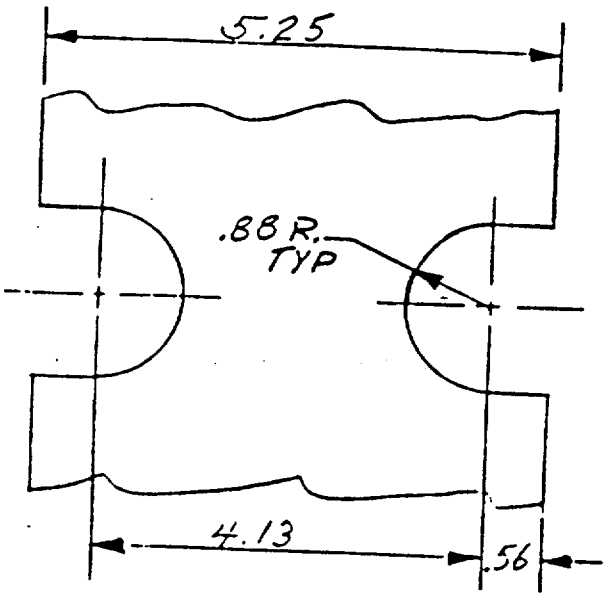

NOTCHES
4 PLACES

BORAFLEX
POISON
MATERIAL
.020 gr./cm² B^{10}

% TOTAL AREA

$\frac{17.36}{729}$ = 2% For 8 NOTCHES

TYPICAL CELL ELEVATION

FIGURE 5

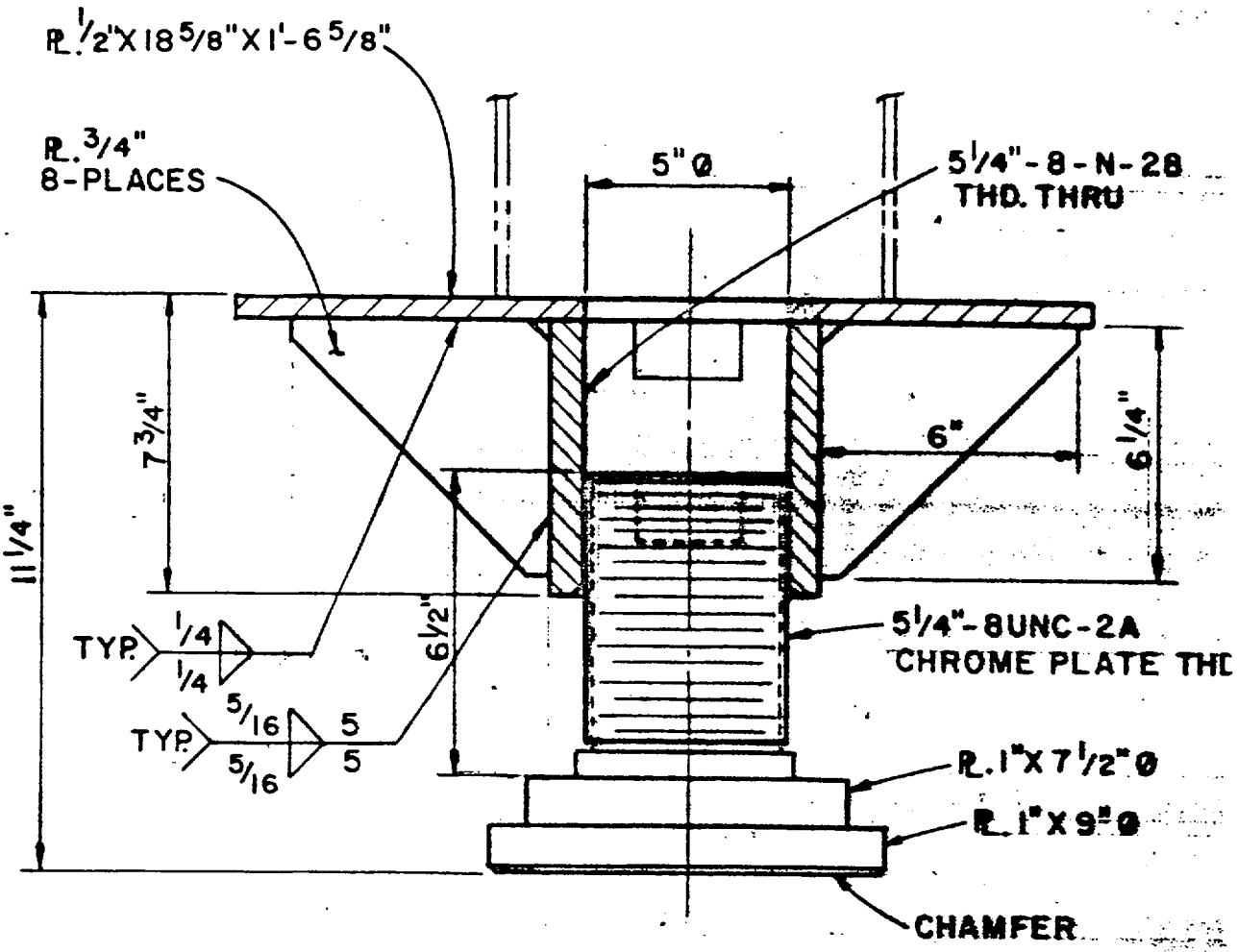

Ref. Dwgs.
U.S. Tool & Die, Inc.
8601-26
8601-27

TYPICAL ADDJUSTABLE SUPPORT LEG

FIGURE 6

CENTER FIXED SUPPORT LEG

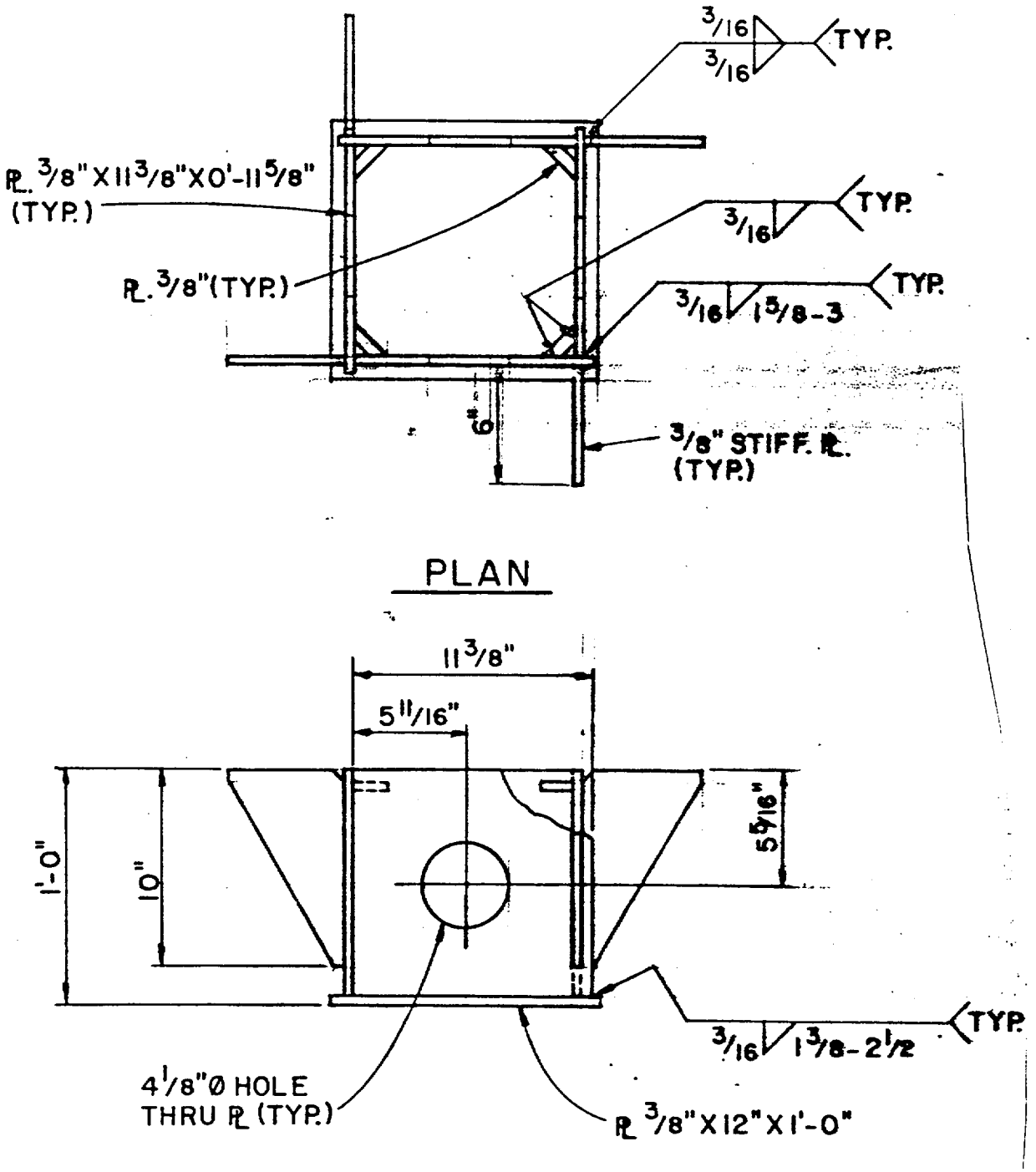

FIGURE 7

FLOOR BRIDGE PLATE

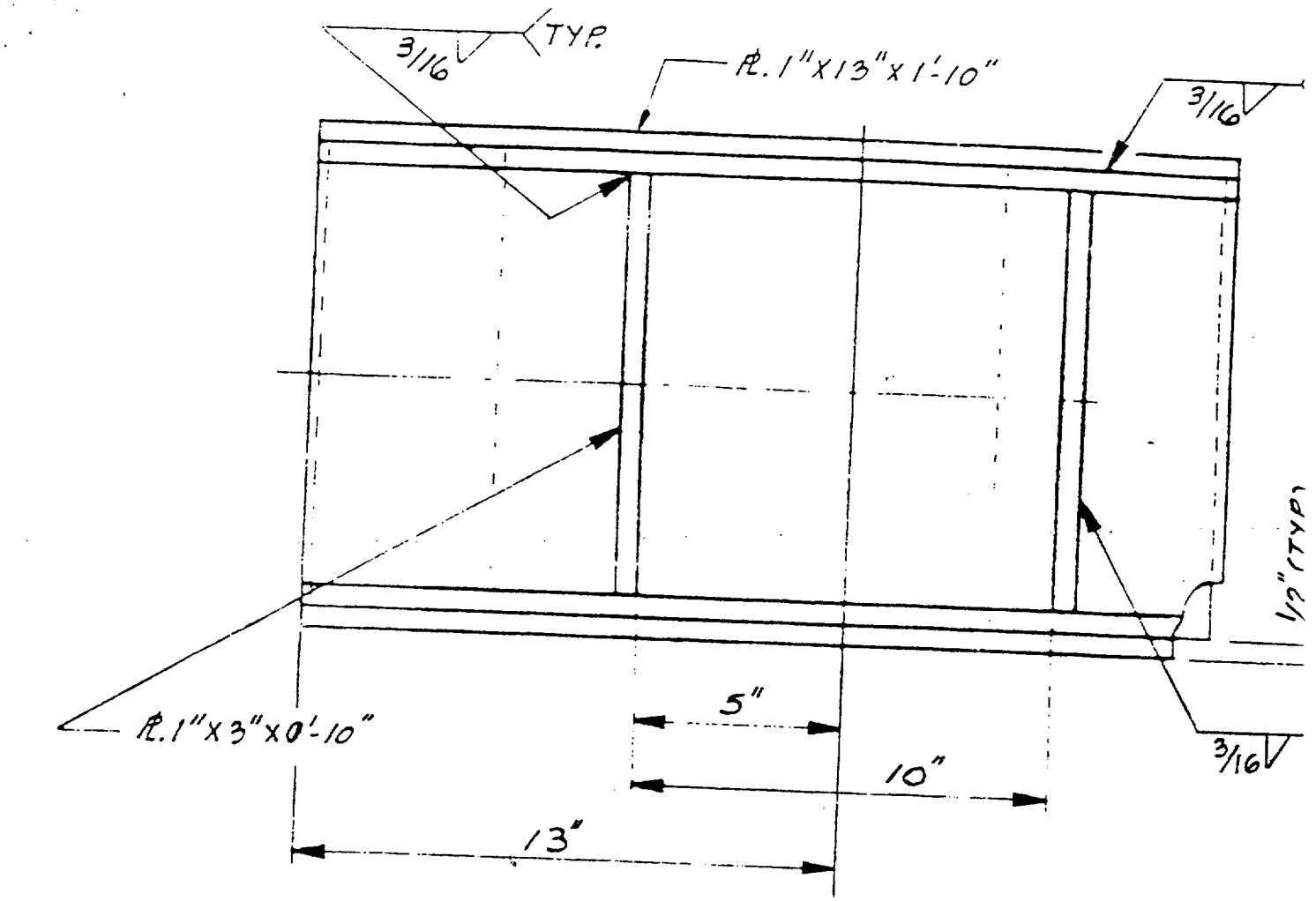

PLAN

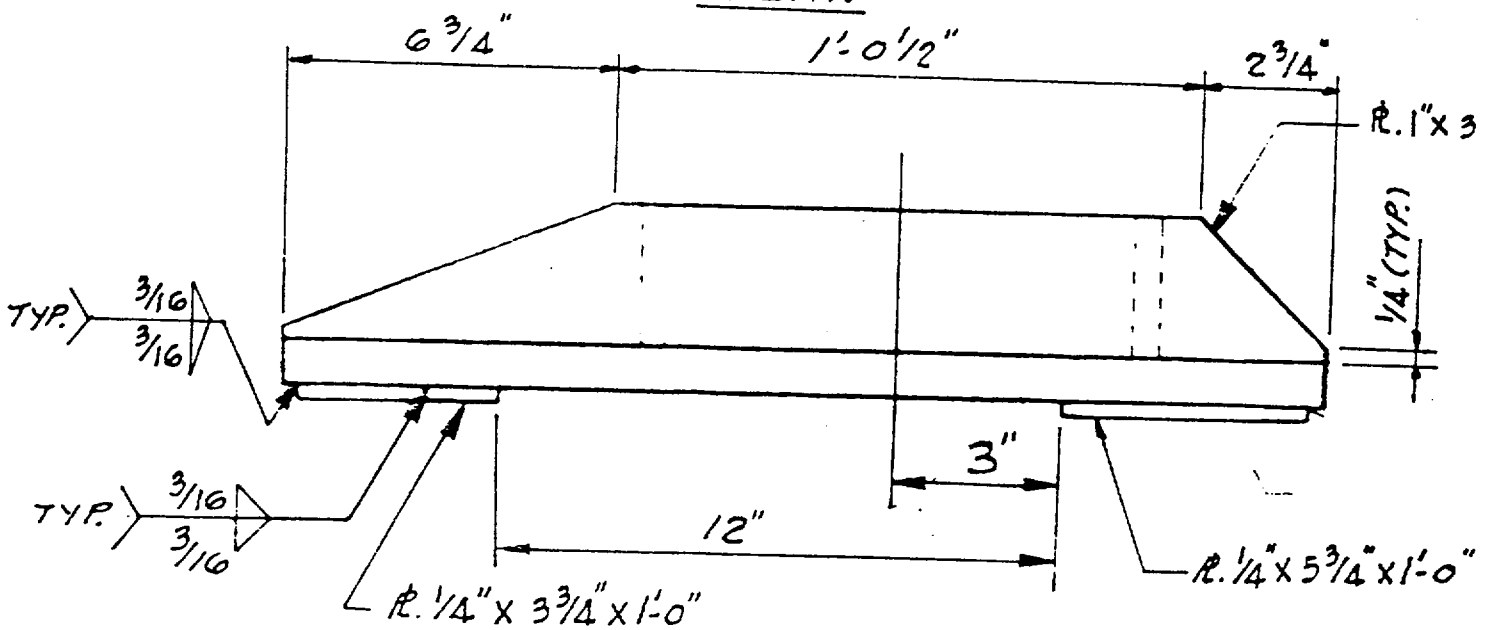

ELEVATION

FIGURE 8

REFINED 3-D SINGLE RACK

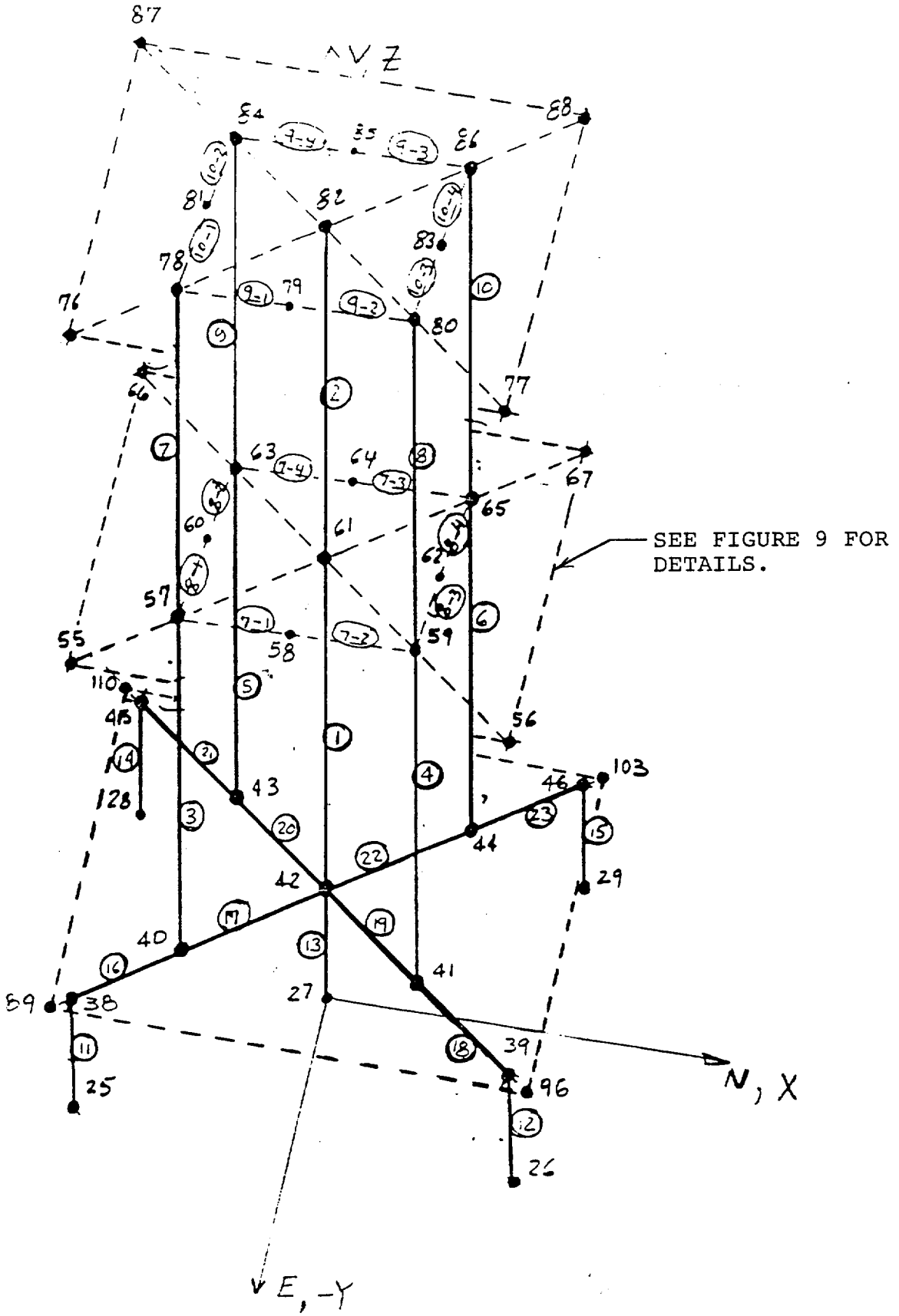

FIGURE 9

RACK TO WALL IMPACT SPRINGS

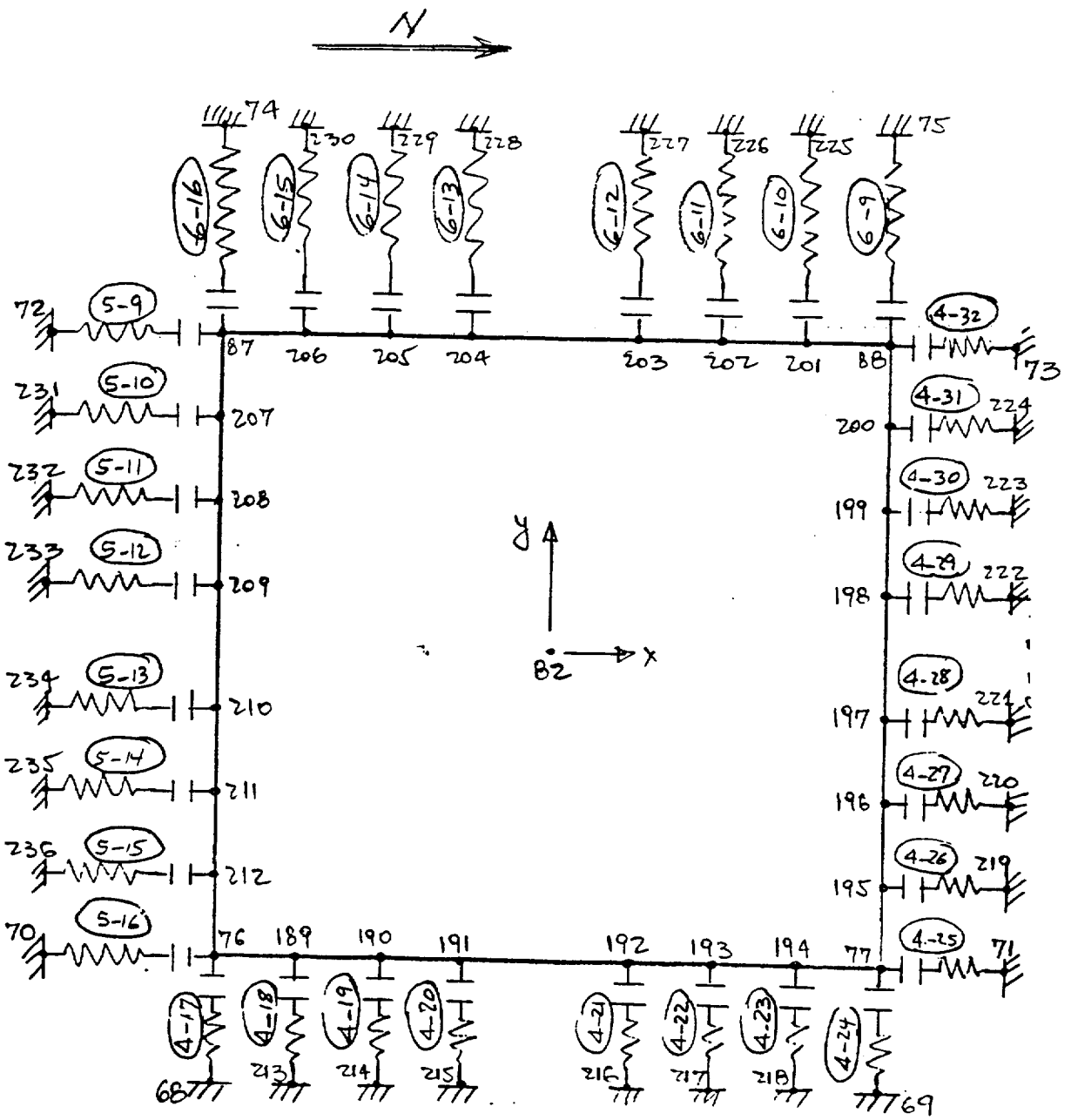

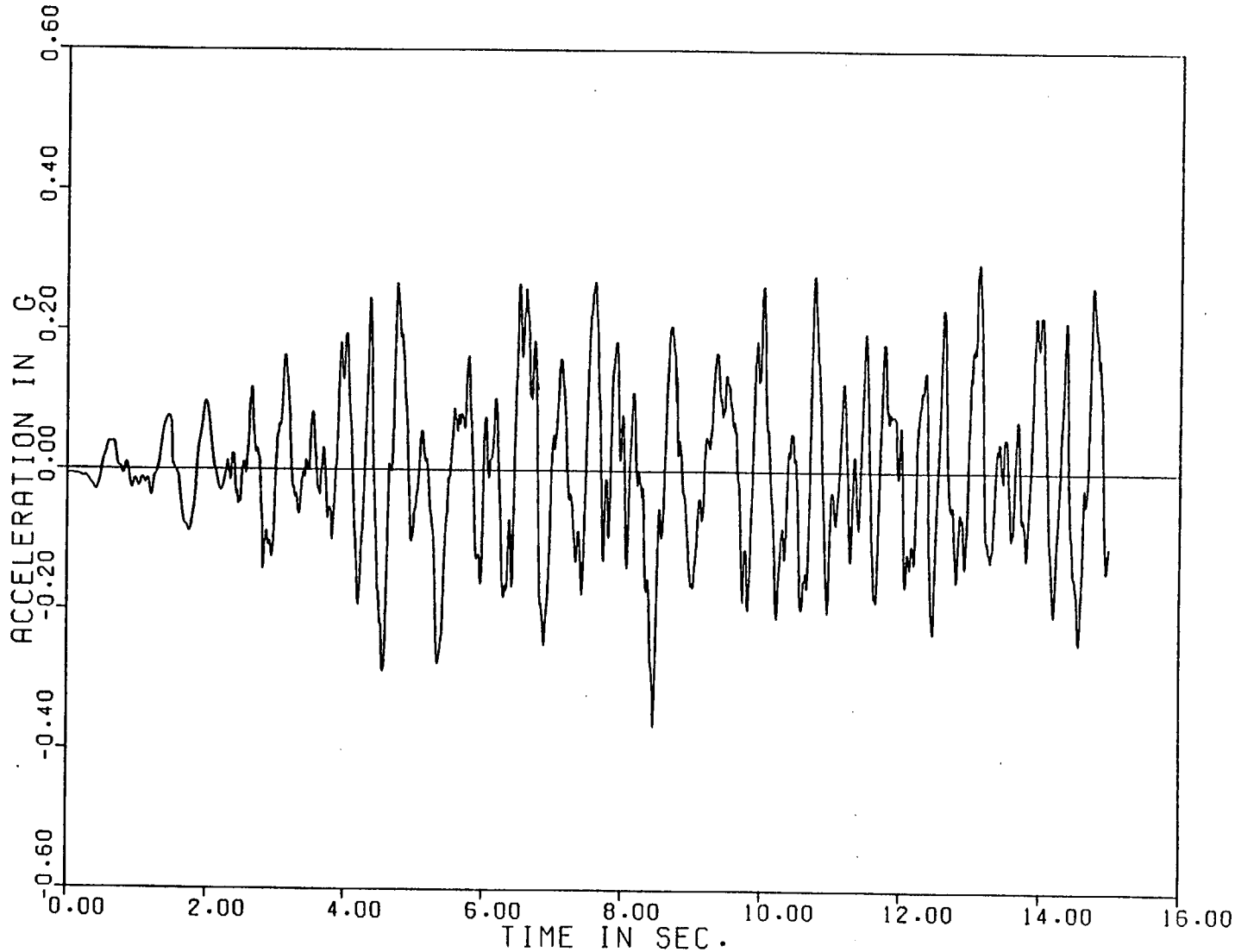

N-S COMBINED

FIGURE 10

Artificial Response Spectrum Consistent Time History

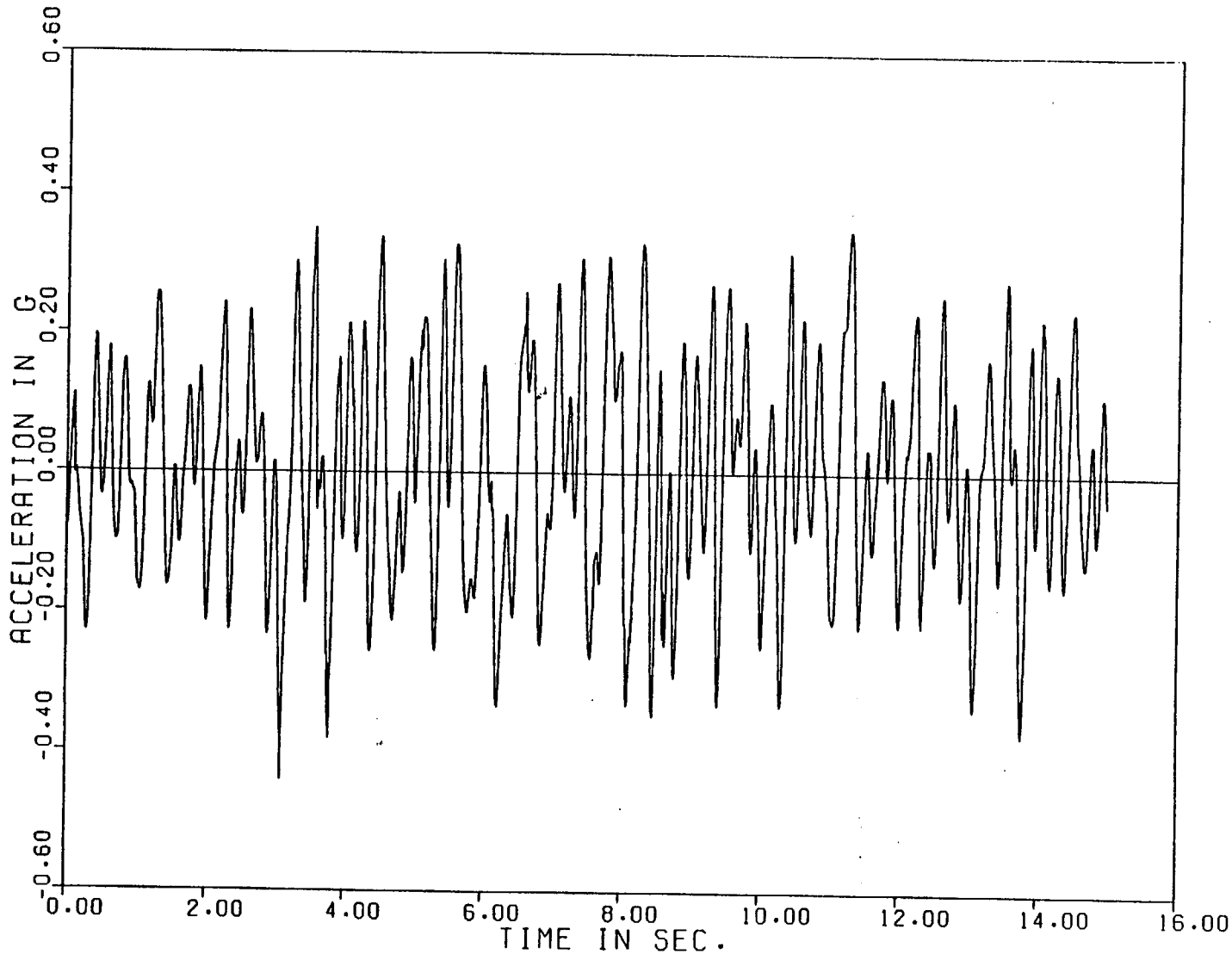

E-W COMBINED

FIGURE 11

Artificial Response Spectrum Consistent Time History

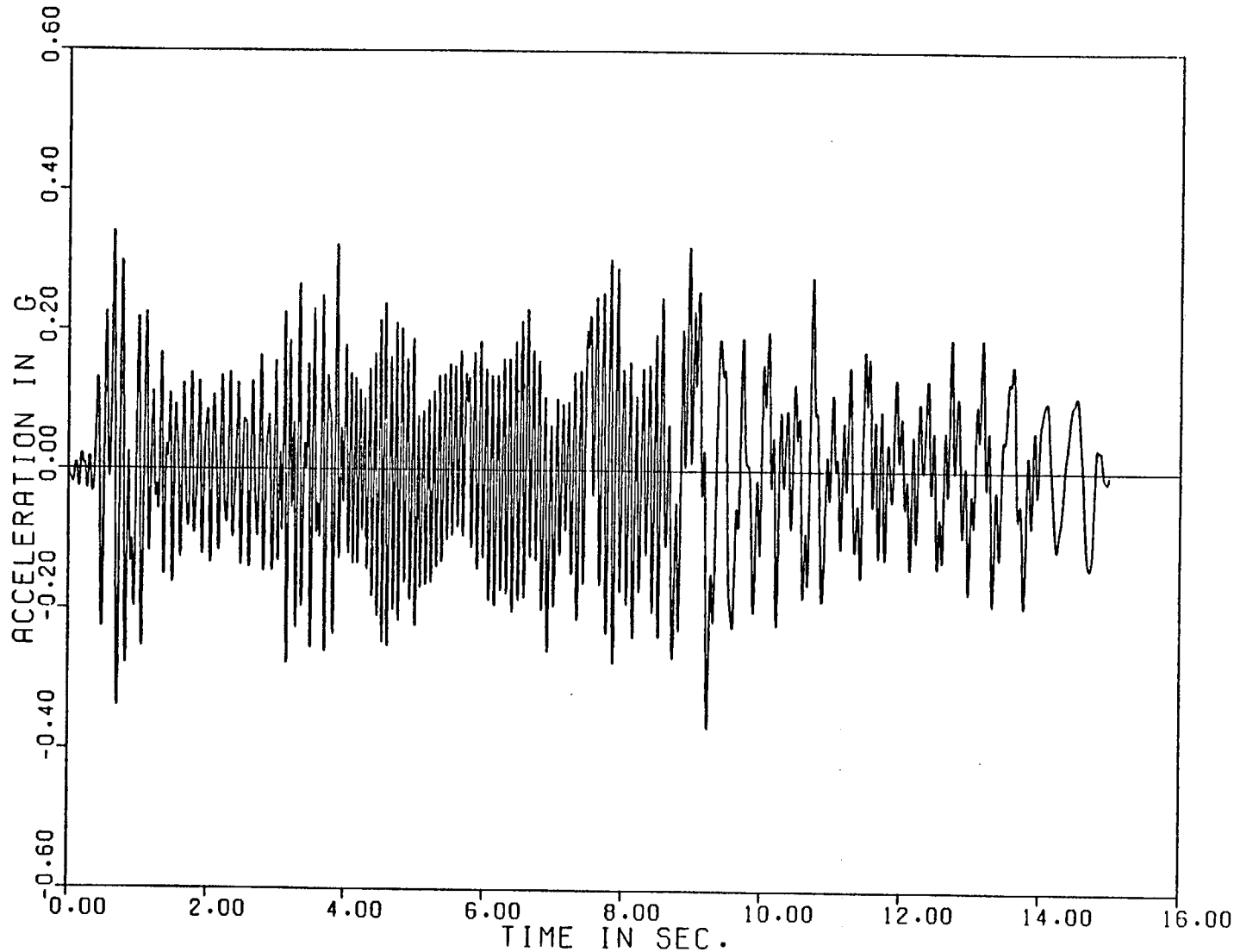

VERT COMBINED

FIGURE 12

Artificial Response Spectrum Consistent Time History

FIGURE 13

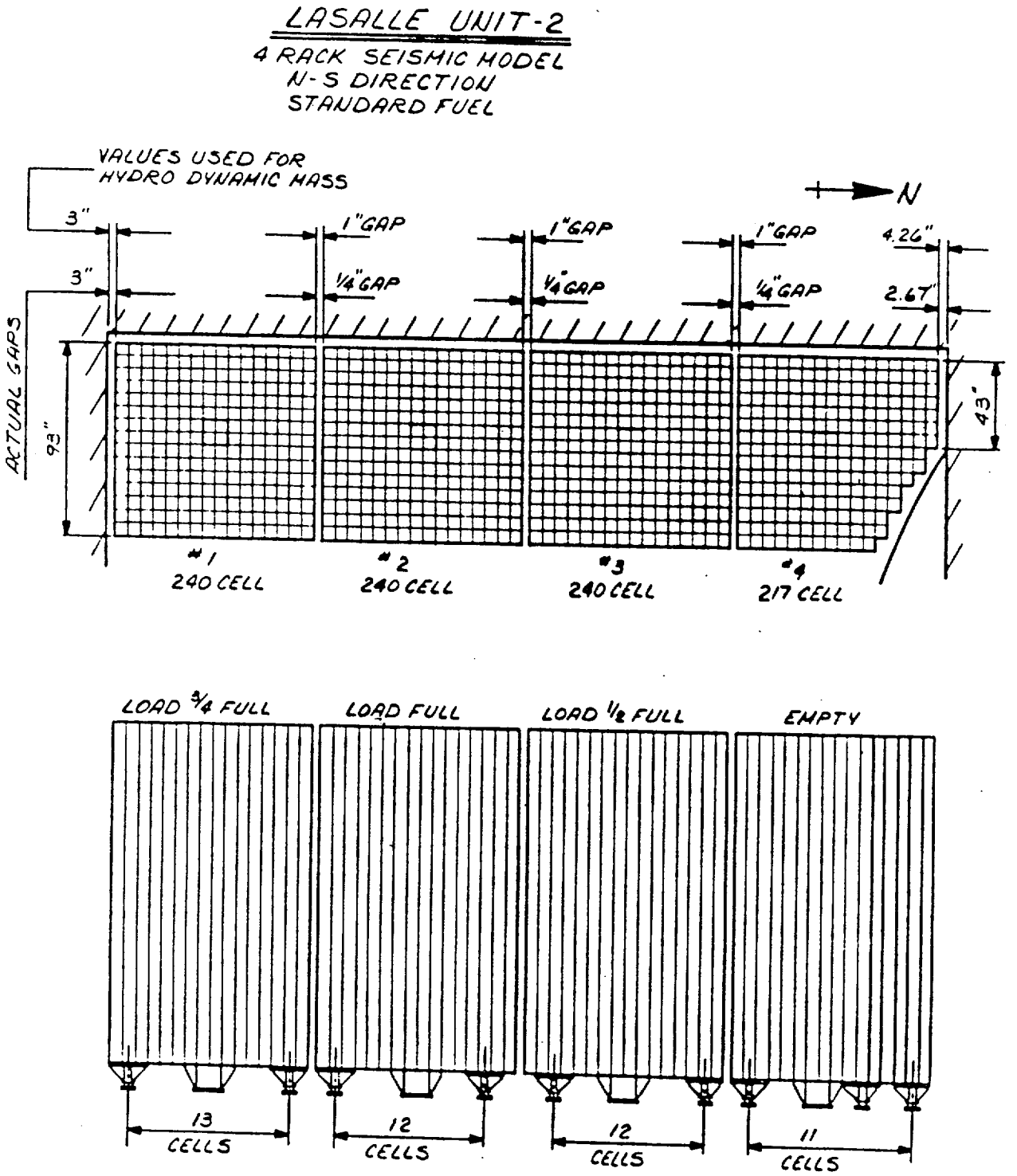

2D MULTI-RACK MODEL

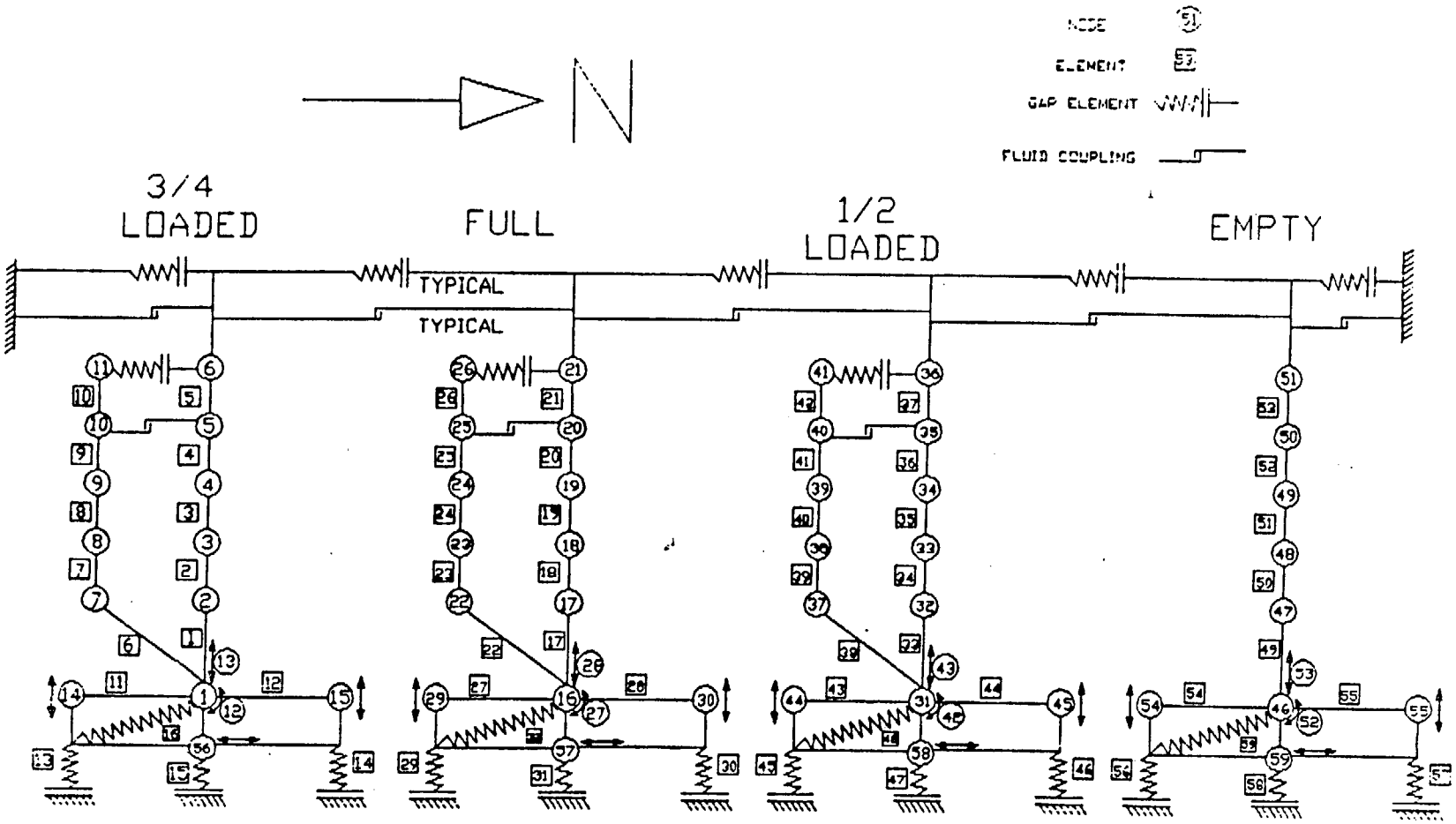

FIGURE 14

2D MULTI-RACK MODEL

FIGURE 15

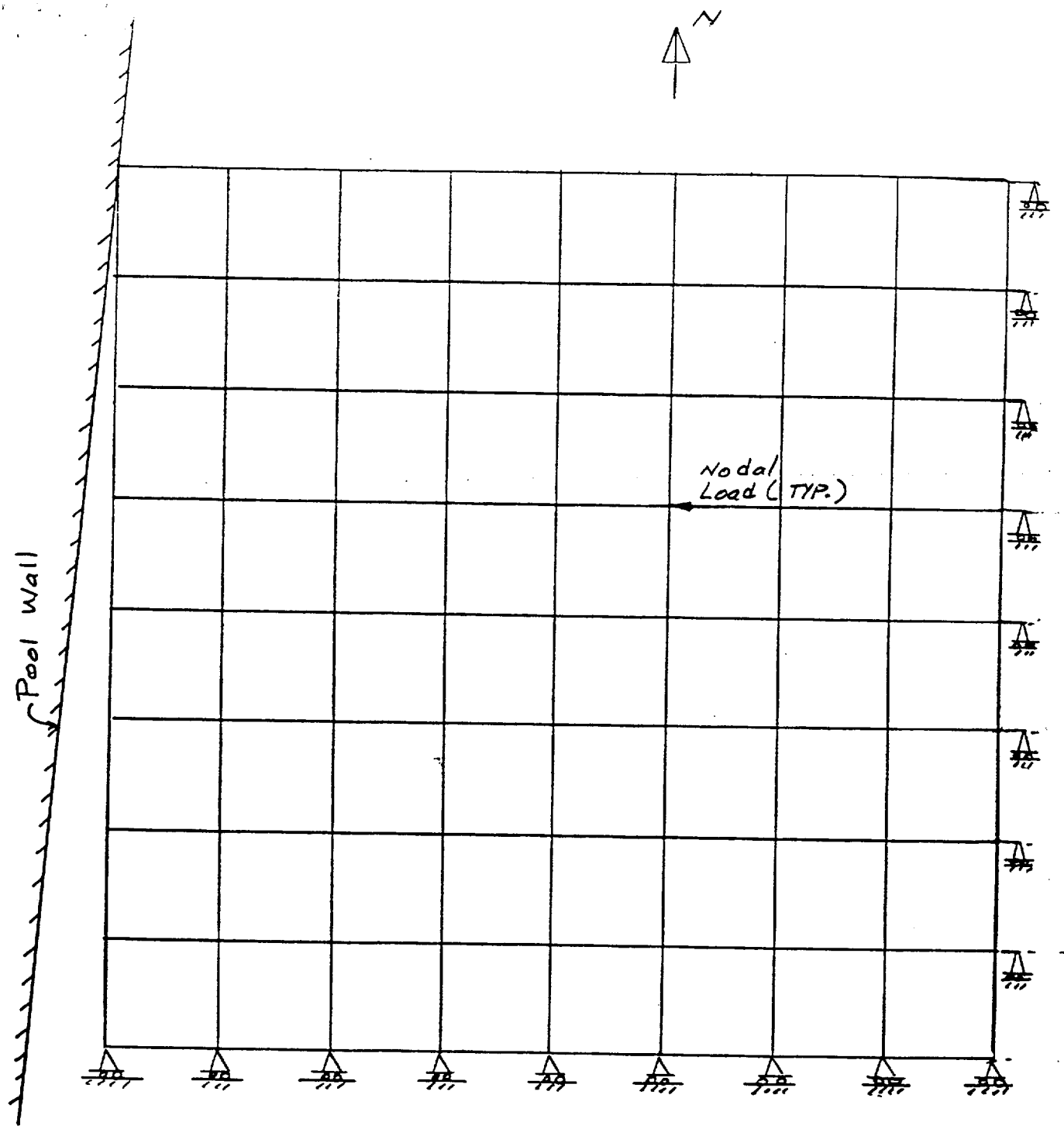

Note: Loads applied at all nodes. Spatial distribution consistant with the translational and rotational accelerations of the master node from 3D dynamic analysis

2-D Static Model For Local Impact Response

FIGURE 16

REINFORCEMENT PLATE DETAILS

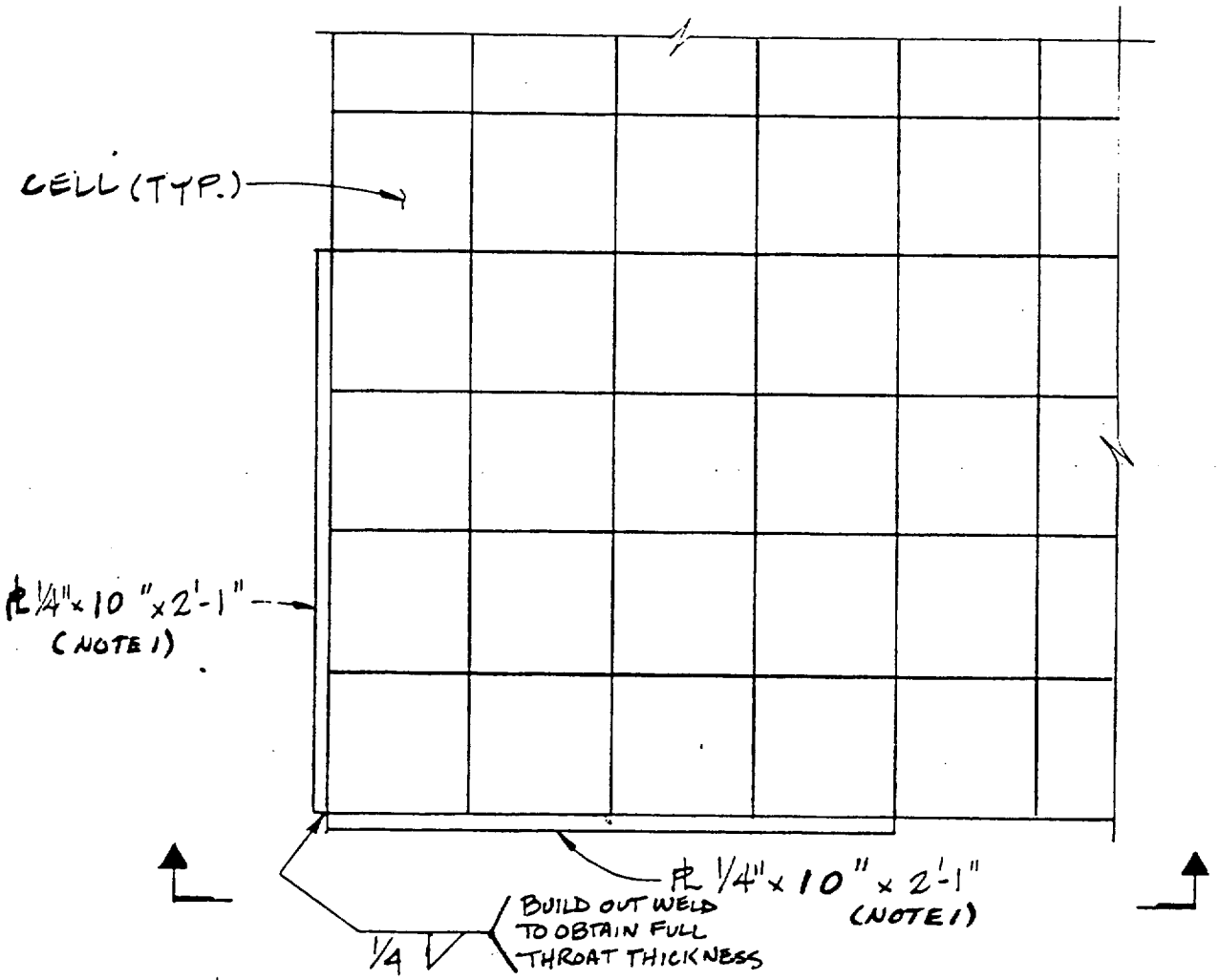

PLAN OF TYPICAL RACK CORNER REINFORCEMENT DETAIL

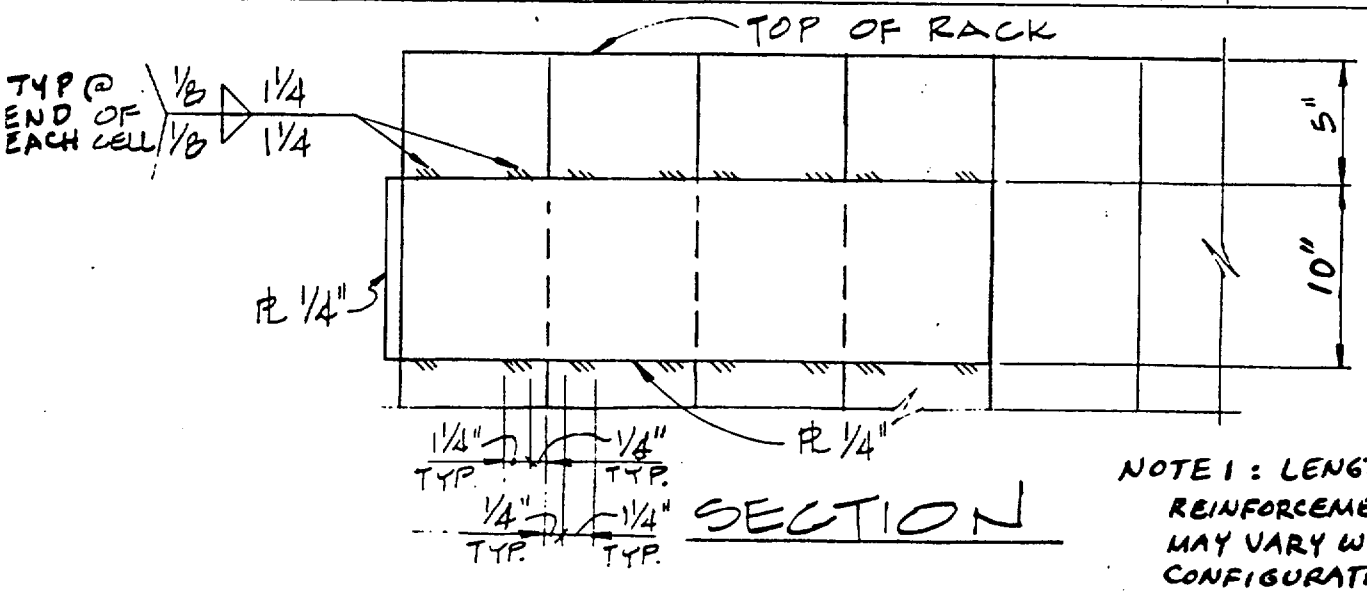

SECTION

NOTE 1: LENGTH OF REINFORCEMENT PLATE MAY VARY WITH RACK CONFIGURATION AND DIRECTION OF POTENTIAL IMPACT

FIGURE 17

FUEL POOL STRUCTURE

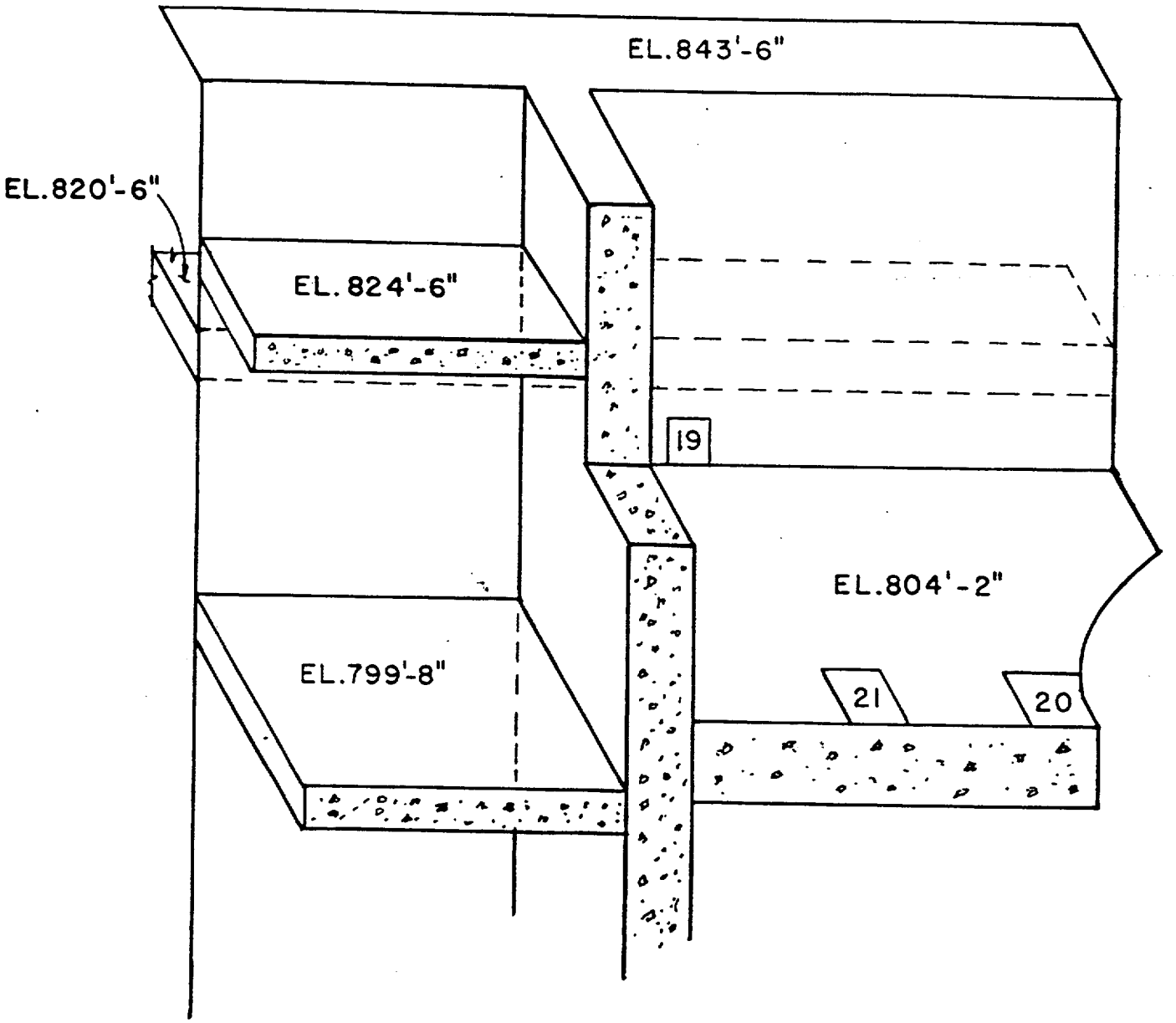

LOCATION OF CRITICAL SECTION

UNITED STATES
NUCLEAR REGULATORY COMMISSION
WASHINGTON, D. C. 20555

ENVIRONMENTAL ASSESSMENT

BY THE OFFICE OF NUCLEAR REACTOR REGULATION

RELATING TO THE EXPANSION OF THE SPENT FUEL POOL

FACILITY OPERATING LICENSE NO. NPF-18

COMMONWEALTH EDISON COMPANY

LASALLE COUNTY STATION, UNIT 2

DOCKET NO. 50-374

1 INTRODUCTION

1.1 Description of Proposed Action

By letter dated September 19, 1986 as supplemented on August 18, 1987, Commonwealth Edison Company (CECo or the licensee) requested an amendment to Facility Operating License No. NPF-18 for LaSalle County Station, Unit 2 to allow the expansion of the capacity of the spent fuel pool. Further information was provided in the form of answers to staff questions by letters dated November 5, 24, 1987, May 17, 1988 and June 6, 1989.

The amendment would specifically authorize the licensee to increase the capacity of the spent fuel pool from the currently approved capacity of 1120 fuel assemblies to the proposed capacity of 4073 fuel assemblies plus (5) defective fuel storage cells. The proposed expansion would be achieved by removing the current spent fuel racks from the pool and replacing them with new racks (i.e., reracking), in which the cells for the spent fuel assemblies are more closely spaced. The proposed arrangement would make use of free standing racks.

There are two spent fuel storage pools at LaSalle County Station. The existing racks in each of these pools have 1080 fuel storage cells. In the 1989 to 1990 time frame, the station will no longer have full core discharge reserve. Consequently, Commonwealth Edison proposes to replace the existing spent fuel racks for LaSalle Unit 2 with racks of a high density design. These free standing racks will have capacity for the storage of 4073 fuel assemblies and 43 special storage cells. The special storage racks consist of 35 control rod storage cells, five (5) defective fuel storage cells and three (3) control rod guide tube storage cells. The existing channel storage rack will remain intact.

These spent fuel storage racks provide smooth full length square storage cells of stainless steel in a welded honeycomb structure. Each storage cell, except on the periphery of the complete array, is bordered on all four sides by Boraflex neutron absorbing poison sheets sandwiched between adjacent cell walls. Each rack is supported on the pool floor by five pedestal structures

welded to the bottom of the rack. A screw adjustable pad is provided in this structure to be used for rack leveling. U.S. Tool and Die provides the appropriate tool to make these adjustments from the surface through the cells over the pedestals. The height of the bottom of the rack above the pool floor, resulting from the necessary vertical dimension of the pedestal structure, provides adequate underneath space for cooling water flow.

1.2 Need for Increased Storage Capacity

LaSalle Unit 2 received a full power operating license on March 23, 1984. At the time of licensing, the racks in its spent fuel pool had 1080 fuel storage cells. In order to maintain a full core reserve discharge capability beyond 1990, the licensee proposed to replace the existing racks with high-density racks which will have capacity for the storage of 4078 fuel assemblies and 38 special storage cells.

The Nuclear Waste Policy Act of 1982 provided for limited away-from-reactor storage, and stipulated that a spent fuel repository would be available by 1998. Since the Act does not require a repository before this date, it is not clear whether there will be any place to ship spent fuel in the 1980's or early-to-mid-1990's. Therefore, in the interim, CECo needs to provide more storage capacity.

1.3 Alternatives

Commercial reprocessing of spent fuel has not developed as originally anticipated. In 1975, the Nuclear Regulatory Commission directed its staff to prepare a Generic Environmental Impact Statement (GEIS) on spent fuel storage. The Commission directed the staff to analyze alternatives for the handling and storage of spent light water power reactor fuel with particular emphasis on developing long-range policy. The GEIS was to consider alternative methods of spent fuel storage, as well as the possible restriction or termination of the generation of spent fuel through nuclear power plant shutdown.

A "Final Generic Environmental Impact Statement on Handling and Storage of Spent Light Water Power Reactor Fuel" (NUREG-0575), Volumes 1-3 (the FGEIS) was issued by the NRC in August 1979. The finding of the FGEIS is that the environmental impact costs of interim storage are essentially negligible, regardless of where such spent fuel is stored. A comparison of the impact costs of various alternatives reflects the advantage of continued generation of nuclear power versus its replacement by coal-fired power generation. Continued nuclear generation of power versus its replacement by oil-fired generation provides an even greater economic advantage. In the bounding case considered in the FGEIS, that of shutting down the reactor when the existing spent fuel storage capacity is filled, the cost of replacing nuclear stations before the end of their normal lifetime makes this alternative uneconomical. The storage of spent fuel as evaluated in NUREG-0575 is considered to be an interim action, not a final solution to permanent disposal.

One spent fuel storage alternative considered in detail in the FGEIS is the expansion of the onsite fuel storage capacity by modification of the existing spent fuel pools. Applications for more than 100 spent fuel pool

expansions have been received and have been approved or are under review by the NRC. The finding in each case has been that the environmental impact of such increased storage capacity is negligible. However, since there are variations in storage design and limitations caused by the spent fuel already stored in some of the pools, the FGEIS recommends that licensing reviews be done on a case-by-case basis to resolve plant-specific concerns.

The continuing validity and site specific applicability of the conclusions in the NUREG-0575 have been confirmed in the Environmental Assessments for the Surry, H.B. Robinson and Oconee Plants independent spent fuel storage, installations.

The licensee has considered several alternatives to the proposed action of the spent fuel pool expansion. The staff has evaluated these and certain other alternatives with respect to the need for the proposed action as discussed in Section 1.2 of this assessment. The following alternatives were considered:

(1) Shipment of spent fuel to a permanent federal fuel storage/disposal facility.
(2) Shipment of fuel to a reprocessing facility.
(3) Shipment of fuel to another utility or site for storage.
(4) Reduction of spent fuel generation.
(5) Construction of a new independent spent fuel storage installation (ISFSI).
(6) No action taken.

Each of these alternatives is discussed below.

1. <u>Shipment of Spent Fuel to a Permanent Federal Fuel Storage/Disposal Facility</u>

Shipment to a permanent federal fuel storage disposal facility is a preferred alternative to increasing the onsite spent fuel storage capacity. DOE is developing a repository under the Nuclear Waste Policy Act of 1982 (NWPA). However, the facility is not likely to be ready to receive spent fuel until the year 2003, at the earliest.

As an interim measure, shipment to a Monitored Retrievable Storage (MRS) facility is another preferred alternative to increasing the onsite spent fuel storage capacity. DOE, under the NWPA, has recently submitted its MRS proposal to Congress. Because Congress has not authorized an MRS and because one is not projected to be available until 1998, this alternative does not meet the near-term storage needs of LaSalle, Unit 2.

Under the NWPA, the federal government has the responsibility to provide not more than 1900 metric tons capacity for the interim storage of spent fuel. The impacts of storing fuel at a Federal Interim Storage (FIS) facility fall within those already assessed by the NRC in NUREG-0575. In passing NWPA, Congress found that the owners and operators of nuclear power stations have the primary responsibility for providing interim storage of spent nuclear fuel. In accordance with the NWPA and 10 CFR Part 53, shipping of spent fuel to a FIS facility is considered a last resort alternative. At this time, the licensee cannot take advantage of FIS because existing storage capacity is not maximized.

Therefore, CECo has been diligently pursuing this application for the spent fuel pool expansion at this time. The alternative of shipment of spent fuel to a FIS is not available.

2. Shipment of Fuel to a Reprocessing Facility

Reprocessing of spent fuel from LaSalle is not viable because, presently, there is no operating commercial reprocessing facility in the United States, nor is there the prospect for one in the foreseeable future.

3. Shipment of Fuel to Another Utility or Site For Storage

The shipment of spent fuel from LaSalle to the storage facility of another utility company could provide short-term relief for the storage capacity problem. However, the NWPA and 10 CFR Part 53 clearly place the responsibility for the interim storage of spent nuclear fuel with each owner or operator of nuclear power plant. Moreover, transshipment of spent fuel to and its storage at another site would entail potential environmental impacts greater than those associated with the proposed increased storage at the LaSalle site. Therefore, this is not considered a practical or reasonable alternative.

4. Reduction of Spent Fuel Generation

Improved usage of fuel in the reactor and/or operation at a reduced power level would extend the life of the fuel in the reactor. In the case of extended burnup of fuel assemblies, the fuel cycle would be extended and fewer offloads would take place. However, the current storage capacity would still be quickly exhausted as discussed in Section 1.2. Operation at reduced power would not make effective use of available resources and would thus result in economic penalties.

5. Construction of a New Independent Spent Fuel Storage Installation

Additional storage capacity could be developed by building a new, independent spent fuel storage installation (ISFSI), similar either to the existing pool or a dry storage installation. The NRC staff has generically assessed the impacts of the pool alternative and found, as reported NUREG-0575, that "the storage of LWR spent fuels in water pools has an insignificant impact on the environment." A generic assessment for the dry storage alternative has not been made by the staff. However, assessments for the dry cask ISFSI at the Surry Power Station and the dry modular concrete ISFSIs at the H.B. Robinson Steam Electric Plant Unit 2 and the Oconee Nuclear Station resulted in Findings of No Significant Impact. While these alternatives are environmentally acceptable, such a new storage facility, either at LaSalle or at a location offsite, would require new site-specific design and construction, including equipment for the transfer of spent fuel. NRC review, evaluation and licensing of such a facility would also be required. It is not likely that this entire effort would be completed in time to meet the need for additional capacity as discussed in Section 1.2. Furthermore, such construction would not utilize the existing expansion capabilities of the existing pool and thus would waste resources.

6. No Action Taken

If no action were taken, i.e., the spent fuel pool storage capacity remains at 1080 locations, the storage capacity would become exhausted in the very near future and LaSalle Unit 2 would have to be shut down. Such termination of operations would result in no further generation of spent fuel, thereby eliminating the need for increased spent fuel storage capacity. The impacts of terminating the generation of spent fuel by ceasing the operation of existing nuclear power plants (i.e., ceasing generation of electric power) when their spent fuel pools become filled was evaluated in NUREG-0575 and found to be undesirable. This alternative would be a waste of an available resource, LaSalle Unit 2 itself, and is not considered viable.

In summary, the only long-term alternative that could provide an alternative solution to the LaSalle spent fuel storage capacity problem is the construction of a new independent spent fuel storage installation at the LaSalle site or at a location away from the site. Construction of such an additional spent fuel storage facility could provide long-term increased storage capacity for LaSalle. However, it is not likely that this alternative could be implemented in a timely manner to meet the need for additional capacity for LaSalle Unit 2. Further, this alternative would waste resources.

1.4 Fuel Reprocessing History

Currently, spent fuel is not being reprocessed on a commercial basis in the United States. The Nuclear Fuel Services (NFS) plant at West Valley, New York, was shut down in 1972 for alterations and expansion. In September 1976, NFS informed the Commission that it was withdrawing from the nuclear fuel reprocessing business. The Allied General Nuclear Services (AGNS) proposed plant in Barnwell, South Carolina, is not licensed to operate. The General Electric Company (GE) Morris Operation (formerly Midwest Recovery Plant) in Morris, Illinois, is in a decommissioned condition.

In 1977, President Carter issued a policy statement on commercial reprocessing of spent nuclear fuel, which effectively eliminated reprocessing as part of the relatively near-term nuclear fuel cycle.

Although no plants are licensed for reprocessing fuel, the storage pools at Morris and at West Valley are licensed to store spent fuel. The storage pool at West Valley is not full, but the licensee (the current licensee is New York Energy Research and Development Authority) is presently not accepting any additional spent fuel for storage, even from those power generating facilities that had contractual arrangements with West Valley. (In fact, spent fuel is being removed from NFS and returned to its owners.) On May 4, 1982, the license held by GE for spent fuel storage activities at its Morris operation was renewed for another 20 years; however, GE is committed to accept only limited quantities of additional spent fuel for storage at this facility from Cooper and San Onofre Unit 1.

2 RADIOACTIVE WASTES

LaSalle Unit 2 contains radioactive waste treatment systems designed to collect and process the gaseous, liquid, and solid waste that might contain radioactive material. The radioactive waste treatment systems are evaluated in the Final Environmental Statement (FES) dated November 1978. There will be no change in the waste treatment systems described in the FES because of the proposed spent fuel pool (SFP) rerack.

2.1 Radioactive Material Released to the Atmosphere

The principal radioactive materials that are considered with respect to nonaccident releases are the noble gases, the halogens, and tritium. Of these, the only radioactive gas of any significance is Krypton-85 (Kr-85). This is the principal radioactive gas that is associated with the long term storage of the additional spent fuel assemblies. It is released through fuel cladding defects. Experience has shown that after spent fuel has decayed 4 to 5 months, there is no longer any significant release of fission products, including Kr-85, from stored spent fuel. To determine the average annual release of Kr-85, we assume that all of the Kr-85 released to the SFP will be released prior to the next refueling. That is, the release is associated with a batch of discharged fuel, and not with the total inventory of the SFP. The enlarged capacity of the pool, therefore, has no effect on the calculated average annual guaranties of Kr-85 released to the atmosphere each year.

The other gases are of little radioactive significance. With respect to the halogens, I-131 is the principal contributor. Iodine-131 releases from spent fuel assemblies to the SFP water will not be significantly increased by the expansion of the fuel storage capacity. Iodine-131 inventory in the fuel will decay to negligible levels between refuelings. Hence, any significant releases are associated with a given full discharge batch, rather than with the entire inventory of the SFP, so that SFP expansion does not affect I-131 releases.

A relatively small amount of Tritium is produced during reactor operation by fissioning of the reactor fuel. It is released by diffusion through the fuel and Zircaloy cladding. Tritium is released from the fuel while the fuel is hot, that is, during reactor operation and, to a limited extent, shortly after shutdown. Since its release is diminished to insignificant levels, expanding the SFP capacity will not increase significantly the Tritium activity in the SFP.

Another effect on airborne activity is the potential for increased evaporation due to storing additional spent fuel assemblies in the SFP. However, this effect is not expected to be significant for the following reasons:

(1) Storing additional spent fuel assemblies in the SFP is not expected to raise the bulk water temperature above the design basis temperature identified with normal refueling. Therefore, the evaporation rate is expected to be about the same as before and the annual release of Tritium or iodine by evaporation from the SFP is expected to be the same.

(2) On an annual basis, most airborne releases from LaSalle Unit 2 are due to leakage of reactor coolant which contains Tritium and radioactive iodine in higher concentrations than the SFP. Therefore, even if there were a higher evaporation rate from the SFP, the potential increase in the releases of Tritium and iodine would be small compared to the amount normally released from the station and that which was previously evaluated in the Environmental Statement.

Aside from the above considerations, the station is limited in its total releases of gaseous activity by the Radiological Effluent Technical Specification.

The concentration of radionuclides in the pool water is continuously processed by the SFP cleanup demineralizer and decreased by the decay of short-lived isotopes. The activity is highest during refueling operations when reactor coolant water is introduced in the pool, and decreases as the pool water is processed through the demineralizer. Thereafter, the activity concentration has been and should continue to be dependent on the demineralizer resin replacement with no long-term build-up. The increase of radioactivity, if any, due to the proposed SFP modification should be minor, since the cleanup system can remove radioactivity continuously from the SFP water and, thus, keep it at acceptable levels.

In view of the above, the staff has assumed, for dose calculation purposes, that there will be no significant increase in the release of Tritium or radioiodine due to evaporation from the SFP.

2.2 Solid Radioactive Wastes

The staff does not expect any significant increase in the amount of solid waste generated from the SFP cleanup system due to the proposed modification. If the amount of solid waste is assumed to increase by two additional filter-demineralizer spent resin beds per year due to the increased operation of the SFP cleanup system, the storage of additional spent fuel would increase the amount of solid waste by an average of about 8 cubic meters per year. The annual average volume of solid wastes shipped offsite for burial from LaSalle has been approximately 400 cubic meters. Thus, the increase in annual waste volume shipped from LaSalle would be less than 2 percent of the total annual waste volume. This is a negligible increase and would not have any significant additional environmental impact.

2.3 Radioactive Material Released to Receiving Waters

There should not be a significant increase in the liquid release of radionuclides from the plant as a result of the proposed modifications. Since the SFP cooling and cleanup systems operate as a closed system, only water originating from cleanup of SFP floors and filter-demineralizer backflush need be considered as potential sources of radioactivity. It is expected that neither the quantity nor activity of the floor cleanup water will change as a result of these modifications. The SFP filter-demineralizer resin removes radioactive materials from the SFP water. These spent resins are periodically backflushed with water. The amount of radioactivity in the SFP filter

demineralizer resin may increase slightly due to the additional spent fuel in the pool, but the spent powdered resin (backflushed) will be processed by the liquid radwaste system. After processing in the liquid radwaste system, the amount of radioactivity released to the environment as a result of the proposed modification would be negligible.

3 RADIOLOGICAL IMPACT ASSESSMENT/OCCUPATIONAL EXPOSURE

This section contains the staff's evaluation of the estimates of the additional radiological impacts on the plant workers from the proposed operation of the modified SFP.

The occupational exposure for the proposed modification of the SFP is estimated by the licensee to be less than 10 person-rems. This dose is less than 2 percent of the average annual occupational dose of 735 person-rems per unit per year for operating BWRs in the United States (US NRC 1988). The small increase in radiation dose should not affect the licensee's ability to maintain individual occupational doses within the limits of 10 CFR 20, and is as low as is reasonably achievable. Normal radiation control procedures (US NRC 1981) and Regulatory Guide 8.8 (US NRC 1978) should preclude any significant occupational radiation exposures.

Based on present and projected operations in the SFP area, we estimate that the proposed operation of the modified SFP should add only a small fraction to the total annual occupational radiation dose at this facility.

Thus, we conclude that the proposed storage of spent fuel in the modified SFP will not result in any significant increase in doses received by workers.

3.1 Conclusions

Based on its review of the proposed expansion of the SFP at LaSalle Unit 2, the staff concludes that:

1. The estimated additional radiation doses to the general public are much less than those incurred during normal operation of LaSalle County Nuclear Power Station.

2. The licensee has taken appropriate steps to ensure that occupational dose will be maintained as low as is reasonably achievable and within the limits of 10 CFR Part 20. The total occupational dose estimated to be associated with the proposed modification of the expanded fuel pool is less than 10 person-rems, which is less than 2 percent average annual total occupational dose at the LaSalle County Station Unit 2.

On the basis of the foregoing evaluation, it is concluded that there would be no significant additional environmental radiological impact attributable to the proposed reracking and modification to increase the spent fuel storage capacity at the LaSalle County Station Unit 2.

We have concluded, based on the considerations discussed above, that there is reasonable assurance that the health and safety of the public will not be endangered by operation in the proposed manner, with regard to radiation doses to the public and plant workers.

4 NON-RADIOLOGICAL IMPACT

The new spent fuel racks will be fabricated by U.S. Tool and Die Company in Alison Park, Pennsylvania. They will be shipped by truck to the LaSalle site for installation in the pool. This is not expected to impact terrestrial resources not previously disturbed during the original construction.

The only non-radiological effluent affected by the spent fuel pool expansion is the additional waste heat rejected from the plant. The total increase in heat load rejected to the environment through the cooling systems due to the increased spent fuel storage over the current rejected heat load is 17.6×10^{-6} BTU/hour. This represents an increase of approximately 0.01 percent of the total heat rejected to the environment. Thus, the increase in rejected heat will have negligible impact on the environment. No impact on aquatic biota is anticipated.

The licensee has not proposed any change in the use or discharge of chemicals in conjunction with the expansion of the fuel pool. The proposed fuel pool expansion will not require any change to the NPDES permit.

Therefore, the staff concludes that the non-radiological environmental impacts of expanding the spent fuel pool will be insignificant.

5 SEVERE ACCIDENT CONSIDERATIONS

The staff, in its related Safety Evaluation to be published at a later date, has addressed both the safety and environmental aspects of a fuel handling accident, an event that bounds the potential adverse consequences of accidents attributable to operation of a spent fuel pool with high density racks. A fuel handling accident may be viewed as a "reasonably foreseeable" design basis event which the pool and its associated structures, systems, and components (including the racks) are designed and constructed to prevent. The environmental impacts of the accident were found not to be significant.

The staff has considered accidents whose consequences might exceed a fuel handling accident, that is, beyond design basis events. One such accident, which was investigated by an NRC contractor, involves a structural failure of a spent fuel pool resulting in a rapid loss of all contained cooling water, followed by fuel heatup and a zirconium cladding fire. The details of this severe accident are discussedin NUREG/CR-4982 (1987) entitled "Severe Accidents in Spent Fuel Pools in Support of General Safety Issue 82."

The staff believes that the risk associated with such an accident is extremely low. This belief is based upon the Commission's requirements for the design and construction of spent fuel pools and their contents (e.g., racks), and adherence to approved industry codes and standards. See "Seismic Failure and Drop Analyses of the Spent Fuel Pools at Two Representative Nuclear Power Plants"

NUREG/CR-5176 (1989). For example, in the LaSalle case, the pool itself is an integral part of the fuel handling building, which is designed to Seismic Category I and thus are required to remain functional during and after a safe shutdown earthquake. In addition, the racks are extremely strong in the structural sense in maintaining proper spacing of the fuel assemblies. The water cooling system is extremely reliable; in the highly unlikely event of a total cooling system failure, makeup water sources are available. These are but a few of the considerations used by the staff in assessing the adequacy of the rerack. The staff acknowledges that if the severe accident occurred as described above, the environmental impacts could be significant; however, this event is highly unlikely and is not reasonably foreseeable, in light of the design of the spent fuel pool system and racks. Therefore, further discussion of severe accidents is not warranted, and the staff concludes that an environmental impact statement need not be prepared.

6 SUMMARY

The Final Generic Environmental Impact Statement (FGEIS) on Handling and Storage of Spent Light Water Power Reactor Fuel concluded that the cost of the various alternatives reflects the advantage of continued generation of nuclear power with the accompanying spent fuel storage. Because of the differences in SFP designs, the FGEIS recommended environmental evaluation of SFP expansions on a case-by-case basis.

For the LaSalle County Station, Unit 2, the expansion of the storage capacity of the spent fuel pool will not create any significant additional radiological effects or measurable non-radiological environmental impacts. The additional whole body dose that might be received by an individual at the site boundary is less than 0.1 mrem/year; the estimated dose to the population within an 80 kilometer radius is estimated to be less than 0.1 person-rem/year. These doses are small compared to the fluctuations in the annual dose this population receives from exposure to background radiation. The occupational radiation dose for the proposed operation of the expanded spent fuel pool is estimated by the staff to be less than two percent of the total annual occupational radiation exposure for a facility of this type. The small increase in radiation dose should not affect the licensee's ability to maintain individual occupational dose at the LaSalle County Station, Unit 2 within the limits of 10 CFR Part 20, and as low as is reasonably achievable.

The only non-radiological effluent affected by the SFP expansion is the additional waste heat rejected. The increase in total plant waste heat is insignificant. Thus, there is no significant environmental impact attributable to the waste heat from the plant due to the SFP expansion.

6.1 Alternative Use of Resources

This action does not involve the use of resources not previously considered in connection with the Nuclear Regulatory Commission's Final Environmental Statement, dated November 1978, related to the operation of the LaSalle County Station, Unit 2.

6.2 Agencies and Persons Consulted

The NRC staff reviewed the licensee's request. No other agencies or persons were consulted.

7 BASIS AND CONCLUSIONS FOR NOT PREPARING AN ENVIRONMENTAL IMPACT STATEMENT

The staff has reviewed the proposed spent fuel pool modification to the LaSalle County Station, Unit 2 relative to the requirements set forth in 10 CFR Part 51. Based upon the environmental assessment, the staff has concluded that there are no significant radiological or non-radiological impacts associated with the proposed action and that the proposed license amendment will not have significant effect on the quality of the human environment. Therefore, the Commission has determined, pursuant to 10 CFR 51.31, not to prepare an environmental impact statement for the proposed amendment.

8 REFERENCES

U.S. Nuclear Regulatory Commission, 1978, "Final Environmental Statement Related to Operation of LaSalle County Nuclear Power Station Units Nos. 1 and 2," November 1978.

--- 1977, Regulatory Guide 1.109, Revision 1, "Calculation of Annual Doses to Man from Routine Releases of Reactor Effluents for the Purpose of Evaluating Compliance with 10 CFR Part 50, Appendix I," October 1977.

--- 1978, Regulatory Guide 8.8, revision 3, "Information Relevant to Ensuring That Occupational Radiation Exposures at Nuclear Power Stations Will Be as Low as Is Reasonably Achievable," June 1978.

--- 1981, NUREG-0800, "Radiation Protection," in: "Standard Review Plan," Chapter 12, July 1981 (formerly issued as NUREG-75/087).

--- 1987, NUREG/CR-4982, "Severe Accidents in Spent Fuel Pools in Support of General Safety Issue 82."

--- 1988, NUREG-0713, Volume 7, "Occupational Radiation Exposure at Commercial Nuclear Power Reactors 1985" March 1988.

--- 1989, NUREG/CR-5176, "Seismic Failure and Cask Drop Analyses of the Spent Fuel Pools at Two Representative Nuclear Power Plants".

Principal Contributors:

J. Ridgely	SPLB/NRR
A. Chu	SPLB/NRR
R. Pedersen	PRPB/NRR
H. Richings	SRXB/NRR
P. Shemanski	PD32/NRR
H. Ashar	ESGB/NRR

Dated: June 15, 1989

UNITED STATES
NUCLEAR REGULATORY COMMISSION
WASHINGTON, D. C. 20555

June 15, 1989

Docket No: 50-374

Mr. Thomas J. Kovach
Nuclear Licensing Manager
Commonwealth Edison Company
P.O. Box 767
Chicago, Illinois 60690

Dear Mr. Kovach:

The Commission has filed the enclosed "Notice of Issuance of Amendment to Facility Operating License" with the Office of the Federal Register for publication. The notice relates to the issuance of Amendment No. to Facility Operating License No. NPF-18 for LaSalle County Station, Unit 2. The amendment issued revised the Technical Specifications to allow the licensee to increase the spent fuel pool storage capacity from 1120 to 4078 fuel assemblies.

Sincerely,

Paul C. Shemanski

Paul C. Shemanski, Acting Director
Project Directorate III-2
Division of Reactor Projects - III,
IV, V and Special Projects

Enclosure:
As stated

cc w/enclosure:
See next page

June 15, 19

Docket No: 50-374

Mr. Thomas J. Kovach
Nuclear Licensing Manager
Commonwealth Edison Company
P.O. Box 767
Chicago, Illinois 60690

Dear Mr. Kovach:

The Commission has filed the enclosed "Notice of Issuance of Amendment to Facility Operating License" with the Office of the Federal Register for publication. The notice relates to the issuance of Amendment No. to Facility Operating License No. NPF-18 for LaSalle County Station, Unit 2. The amendment issued revised the Technical Specifications to allow the licensee to increase the spent fuel pool storage capacity from 1120 to 4078 fuel assemblies.

Sincerely,

Paul C. Shemanski

Paul C. Shemanski, Acting Director
Project Directorate III-2
Division of Reactor Projects - III,
IV, V and Special Projects

Enclosure:
As stated

cc w/enclosure:
See next page

DISTRIBUTION

Docket File	NRC & Local PDRs	PDIII-2 r/f
LLuther	PShemanski	OGC-Rockville
DHagan	ACRS (10)	PDIII-2 plant file
GPA/PA	BGrimes	EJordan

	P.S.		P.S.
PDIII-2	PDIII-2	~~OGC-Rockville~~	PDIII-2
LLuther:km	PShemansk		~~DMuller~~ P. shemanski
6/ /89	6/15/89	~~6/ /89~~	6/15/89

action beyond that which has been predicted and described in the Commission's Final Environmental Statement related to the Operation of LaSalle Project, Units 1 and 2 dated November 1978.

For further details with respect to the actions see (1) the application for amendment dated September 16, 1986, supplemented August 18, November 5, 24, 1987, May 17, 1988, and June 6, 1989, (2) Amendment No. 48 to License NPF-18, and (3) the Commission's related Safety Evaluation and Environmental Assessment and Finding of No Significant Impact. All of these items are available for public inspection at the Commission's Public Document Room, 2120 L Street, N.W., Washington, D.C. 20555, and at the Public Library of Illinois Valley Community College, Rural Route No. 1, Oglesby, Illinois 61348. A copy of items (2), and (3) may be obtained upon request addressed to the U.S. Nuclear Regulatory Commission, Washington, D.C. 20555, Attention: Director, Division of Reactor Projects.

Dated at Rockville, Maryland this 15th day of June 1989.

FOR THE NUCLEAR REGULATORY COMMISSION

Paul C. Shemanski

Paul C. Shemanski, Acting Director
Project Directorate III-2
Division of Reactor Projects III,
IV, V, and Special Projects

*See previous concurrence

	P.S.		P.S.
PDIII-2	PDIII-2	*OGC-Rockville	PDIII-2
LLuther:km	PShemanski		PShemanski
6/ /89	6/15/89	3/16/89	6/15/89

7590-01

UNITED STATES NUCLEAR REGULATORY COMMISSION

COMMONWEALTH EDISON COMPANY

DOCKET NO. 50-374

NOTICE OF ISSUANCE OF AMENDMENT TO

FACILITY OPERATING LICENSE

The U.S. Nuclear Regulatory Commission (Commission) has issued Amendment No. 48 to facility Operating License No. NPF-18 issued to Commonwealth Edison Company, which revised the Technical Specifications for operation of the LaSalle County Station, Unit 2, located in LaSalle County, Illinois. THe amendment was effective as of the date of its issuance.

The amendment issued revised the Technical Specifications to allow the licensee to increase the spent fuel pool storage capacity from 1120 to 4078 fuel assemblis.

The application for the amendment complies with the standards and requirements of the Atomic Energy Act of 1954, as amended (the Act), and the Commission's rules and regulations. The Commission has made appropriate findings as required by the Act and the Commission's rules and regulations in 10 CFR Chapter I, which are set forth in the license amendment.

Notice of Consideration of Issuance of Amendment and Opportunity for Hearing in connection with this action was publised in the FEDERAL REGISTER on November 16, 1987 (52 FR 43810). No request for a hearing or petition for leave to intervene was filed following this notice.

The Commission has prepared an Environmental Assessment related to the action and has concluded that an environmental impact statement is not warranted because there will be no environmental impact attributable to the

action beyond that which has been predicted and described in the Commission's Final Environmental Statement related to the Operation of LaSalle Project, Units 1 and 2 dated November 1978.

For further details with respect to the actions see (1) the application for amendment dated September 16, 1986, supplemented August 18, November 5, 24, 1987, May 17, 1988, and June 6, 1989, (2) Amendment No. 48 to License NPF-18, and (3) the Commission's related Safety Evaluation and Environmental Assessment and Finding of No Significant Impact. All of these items are available for public inspection at the Commission's Public Document Room, 2120 L Street, N.W., Washington, D.C. 20555, and at the Public Library of Illinois Valley Community College, Rural Route No. 1, Oglesby, Illinois 61348. A copy of items (2), and (3) may be obtained upon request addressed to the U.S. Nuclear Regulatory Commission, Washington, D.C. 20555, Attention: Director, Division of Reactor Projects.

Dated at Rockville, Maryland this 15th day of June 1989.

FOR THE NUCLEAR REGULATORY COMMISSION

Paul C. Shemanski

Paul C. Shemanski, Acting Director
Project Directorate III-2
Division of Reactor Projects III,
IV, V, and Special Projects

action beyond that which has been predicted and described in the Commission's Final Environmental Statement related to the Operation of LaSalle Project, Units 1 and 2 dated April 5, 1989.

For further details with respect to the actions see (1) the application for amendment dated September 16, 1986, supplemented August 18, November 5, 24, 1987, May 17, 1988, and June 6, 1989, (2) Amendment No. 48 to License NPF-18, and (3) the Commission's related Safety Evaluation and Environmental Assessment and Finding of No Significant Impact. All of these items are available for public inspection at the Commission's Public Document Room, 2120 L Street, N.W., Washington, D.C. 20555, and at the Public Library of Illinois Valley Community College, Rural Route No. 1, Oglesby, Illinois 61348. A copy of items (2), and (3) may be obtaind upon request addressed to the U.S. Nuclear Regulatory Commission, Washington, D.C. 20555, Attention: Director, Division of Reactor Projects.

Dated at Rockville, Maryland this 5th day of April 1989.

FOR THE NUCLEAR REGULATORY COMMISSION

Paul C. Shemanski

Paul C. Shemanski, Acting Director
Project Directorate III-2
Division of Reactor Projects III,
IV, V, and Special Projects

*See previous concurrence

	P.S.		P.S.
PDIII-2	PDIII-2	*OGC-Rockville	PDIII-2
LLuther:km	PShemanski		PShemanski
6/ /89	6/15/89	3/16/89	6/15/89

action beyond that which has been predicted and described in the Commission's Final Environmental Statement related to the Operation of LaSalle Project, Units 1 and 2 dated

For further details with respect to the actions see (1) the application for amendment dated September 16, 1986, supplemented August 18, November 5, 24, 1987 and May 17, 1988, (2) Amendment No. 46 to License NPF-18, and (3) the Commission's related Safety Evaluation and Environmental Assessment and Finding of No Significant Impact. All of these items are available for public inspection at the Commission's Public Document Room, 2021 L Street, N.W., Washington, D.C. 20555, and at the Public Library of Illinois Valley Community College, Rural Route No. 1, Oglesby, Illinois 61348. A copy of items (2), and (3) may be obtaind upon request addressed to the U.S. Nuclear Regulatory Commission, Washington, D.C. 20555, Attention: Director, Division of Reactor Projects.

Dated at Rockville, Maryland this 5th day of March

FOR THE NUCLEAR REGULATORY COMMISSION

Daniel R. Muller, Director
Project Directorate III-2
Division of Reactor Projects III,
IV, V, and Special Projects

PDIII-2	P.S. PDIII-2	OGC-Rockville	PDIII-2
LLuther:km	PShemanski		DMuller
3/13/89	3/13/89	3/16/89	3/13/89