Westinghouse

Westinghouse Electric Company
Nuclear Plant Projects
P.O. Box 355
Pittsburgh, Pennsylvania 15230-0355
USA

U.S. Nuclear Regulatory Commission
ATTN: Document Control Desk
Washington, D.C. 20555

Attention: Mr. Larry Burkhart

Direct tel: 412-374-5355
Direct fax: 412-374-5456
e-mail: corletmm@westinghouse.com

Your ref: Project 711
Our ref: DCP/NRC1500

April 15, 2002

SUBJECT: Transmittal of Westinghouse Document, "AP1000 Quality Assurance Procedures Supporting NRC Review of AP1000 DCD Sections 18.2 and 18.8," WCAP-15847, Rev. 0, Non-Proprietary, dated April 2002

Enclosed please find six (6) copies Westinghouse document "AP1000 Quality Assurance Procedures Supporting NRC Review of AP1000 DCD Sections 18.2 and 18.8," WCAP-15847, Rev. 0, Non-Proprietary, dated April 2002. This document is referenced in Chapter 18 of the AP1000 Design Control Document, APP-GW-GL-700, Revision 1.

There is no information proprietary to Westinghouse included in this WCAP.

Please contact me at 412-374-5355 if you have any questions concerning this submittal.

Very truly yours,

M. M. Corletti
Passive Plant Projects & Development
AP600 & AP1000 Projects

/Attachment
1. WCAP-15847, Rev. 0, "AP1000 Quality Assurance Procedures Supporting NRC Review of AP1000 DCD Sections 18.2 and 18.8" (6 copies)

D063

DCP/NRC1500
Project 711

April 15, 2002

bcc:	*C. B. Brinkman	- Westinghouse, Rockville, MD
	W. E. Cummins	- Westinghouse, Pittsburgh, PA, EC E3
	H. A. Sepp	- Westinghouse, Pittsburgh, PA, EC 4-07A
	R. P. Vijuk	- Westinghouse, Pittsburgh, PA, EC E3-05
	J. W. Winters	- Westinghouse, Pittsburgh, PA, EC E3-08

*(w/attachments)

Non-P
Westinghouse Proprietary Class 3

WCAP - 15847

AP1000 Quality Assurance Procedures Supporting NRC Review of AP1000 DCD Sections 18.2 and 18.8

Westinghouse Electric Company LLC

AP1000 DOCUMENT COVER SHEET

TDC: _____ Permanent File: _____ S _____

RFS#: _____ RFS ITEM #: _____

AP1000 DOCUMENT NO.	REVISION NO.		ASSIGNED TO
APP-GW-GAP-200	0	Page 1 of	W-WINTERS

ALTERNATE DOCUMENT NUMBER: WCAP-15847 WORK BREAKDOWN #: GW-GA

ORIGINATING ORGANIZATION: Westinghouse Electric Co., LLC

TITLE: **AP1000 Quality Assurance Procedures Supporting NRC Review of AP1000 DCD Sections 18.2 and 18.8**

ATTACHMENTS:	DCP #/REV. INCORPORATED IN THIS DOCUMENT REVISION:
CALCULATION/ANALYSIS REFERENCE: N/A	

ELECTRONIC FILENAME	ELECTRONIC FILE FORMAT	ELECTRONIC FILE DESCRIPTION
5917.doc	Microsoft Word	N/A

ORIGINATOR	SIGNATURE/DATE	
J. W. Winters		4/10/02
AP1000 RESPONSIBLE MANAGER	SIGNATURE*	APPROVAL DATE
J. W. Winters		4/10/02

*Approval of the responsible manager signifies that document is complete, all required reviews are complete, electronic file is attached and document is released for use.

WESTINGHOUSE CLASS 3

WCAP-15847

AP1000 Quality Assurance Procedures Supporting NRC Review of AP1000 DCD Sections 18.2 and 18.8

S. P. Kerch
J. W. Winters

April 2002

AP1000 Document Number: APP-GW-GAP-200, Rev. 0

Reviewer: _____
M. M. Corletti
Passive Plant Projects and Development

Approved: _____
J. W. Winters, Manager
Passive Plant Projects and Development

Westinghouse Electric Company LLC
P.O. Box 355
Pittsburgh, PA 15230-0355

TABLE OF CONTENTS

1 INTRODUCTION

Chapter 18 of the AP1000 Design Control Document (DCD) contains the AP1000 Design Certification information for Human Factors Engineering. The NRC is reviewing this information against NUREG-0711 (Reference 1).

One review area common to both the Element 1 and Element 7 is that information contained in the Westinghouse AP1000 Program Operating Procedures Document (Reference 2) supports the AP1000 Design Certification but is not being docketed.

To facilitate this review area, the current version of the pertinent procedures are compiled into this WCAP for transmittal to the NRC as examples of design procedures applicable to AP1000.

2.0 REFERENCES

1. NUREG-0711, Human Factors Engineering Program Review Model, July 1994.

2. WCAP-12601 Revision 19, Westinghouse AP600 Program Operating Procedures Document.

APPENDICES

	APP-GW-GAP-100	Rev. 4
Westinghouse Electric Company AP1000 **Program Operating Procedure**	Subject: TABLE OF CONTENTS	
	Approved: J. W. Winters, Manager Passive Plant Projects & Development	Effective Date: 04/01/2002

This procedure is issued as an uncontrolled copy. The current revision of the contents must be verified by referring to the latest revision on record in the AP1000 TDC (Technical Document Control System).

PROCEDURE NUMBER	SUBJECT	REVISION NUMBER	EFFECTIVE DATE
SECTION II	**QUALITY ASSURANCE PROCEDURES (Continued)**		
AP-3.15	System Piping and Instrument Diagram (P&ID) Preparation		See AP600
AP-3.16	Calculation Numbering and Filing		See AP600
AP-3.17	AP600 Component Numbering		See AP600
AP-3.18	System Process Flow Diagram (PFD) Preparation		See AP600
AP-3.21	ASME Piping Design Specification		See AP600
	PROCUREMENT DOCUMENT CONTROL INSTRUCTIONS, PROCEDURES, AND DRAWINGS		
AP-5.1	SSAR Preparation Procedure	0	04-01-01
AP-5.2	PRA Preparation Procedure		04-01-02
AP-5.3	AP600 Tier 1 Document Development Procedure		See AP600
AP-5.4	VOIDED		N/A
AP-5.6	Release of Documentation to NRC in Support of AP600 Design Certification	0	04-01-01
	DOCUMENT CONTROL		
AP-6.1	AP600 Document Numbering	0	See AP600
AP-6.2	Technical Document Release and Control	0	11-01-01
AP-6.3	Preparation, Review, and Approval of AP600 Documents		01-01-02
	CONTROL OF PURCHASED ITEMS AND SERVICES		
AP-7.1	Supplier Evaluation, Audit, and Approval		03-01-02
AP-7.2	Control of Subcontractor Submittals		03-01-02
AP-7.3	Control of AP600 Contributed Labor		See AP600
AP-7.4	Auxiliary Equipment Design and Costing Process		See AP600
	TEST CONTROL CONTROL OF MEASURING AND TEST EQUIPMENT CORRECTIVE ACTION		
AP-16.1	CUSTOMER FEEDBACK		See AP600
AP-16.2	CORRECTIVE ACTION FOR DESIGN DEFICIENCIES OR ERRORS		See AP600
	QUALITY ASSURANCE RECORDS		
	AUDITS		
AP-18.1	Self-assessments		See AP600
	FORMS/EXHIBITS		
—	Forms Exhibit Index		See AP600

PROCEDURE NUMBER	SUBJECT	REVISION NUMBER	EFFECTIVE DATE
SECTION III	**ADMINISTRATIVE PROCEDURES**		
	AP600 CORRESPONDENCE AND DOCUMENTATION		
ADM 1.1	AP600 Correspondence		9-01-2001
	AP600 PROJECT FILING		
	COST / SCHEDULE CONTROL SYSTEMS CRITERIA (C/SCSC) PROCEDURES		
ADM 1.2	Review and Approval of Work Packages, Project Plans, and Schedules		See AP600
ADM 3.1	Contract Work Breakdown Structure Maintenance		See AP600
ADM 3.2	Work Definition and Authorization		See AP600
ADM 3.3	Cost Account Planning and Budgeting		See AP600
ADM 3.4	Data Accumulation		See AP600
ADM 3.5	Variance Analysis and Corrective Action Planning		See AP600
ADM 3.6	Estimate at Completion		See AP600
ADM 3.7	Performance Reporting		See AP600
ADM 3.8	Budget Baseline Change Control		See AP600
ADM 3.9	Schedule Control		See AP600

Westinghouse Electric Company

AP1000

Program Operating Procedure

Subject:

AP1000 PROGRAM PROCEDURE MATRIX

Approved: W. E. Cummins, Director
Advanced Plant Development Unit

Effective Date: 03/01/02

The Westinghouse Electric Company commitment to the quality assurance requirements of the American Society of Mechanical Engineers NQA-1 is established in the Westinghouse Electric Company Quality Management System (QMS) document, which has been accepted by the U.S. Nuclear Regulatory Commission.

For AP1000 quality-related activities performed by Westinghouse, these commitments are satisfied by implementing the applicable Level 2 Westinghouse Electric Company (WEC) procedures and the applicable Level 2 division procedures of the WEC Policies and Procedures Manual, Nuclear Services and Projects Edition, and additional project-specific procedures that address unique program requirements and implementation methodology. This AP1000 Program Operating Procedures Manual, APP-GW-GAP-100, controls these project-specific procedures. The procedures contained in APP-GW-GAP-100 are designated as Level 3. Existing Level 3 procedures from other manuals are also implemented where appropriate.

The attached AP1000 Program Procedure Matrix is provided to show the relationship between the above described procedures and identify the procedures to be implemented on this program. The Matrix also shows the applicability of AP1000 procedures to design organizations external to Westinghouse. As indicated in the Matrix and in the Table of Contents for APP-GW-GAP-100, some AP600 procedures apply to AP1000 work. The AP600 procedures are contained in GW-GAP-100. This Matrix is updated as required to reflect changes in the body of implementing procedures.

Quality Assurance Program Elements (Ref.: NQA-1)	Level 2 Implementing Procedures (1) WEC Policy/Procedure Manual	Level 3 Implementing Procedures (2)(4)
I. ORGANIZATION	The NQA requirements for organization are addressed through organization charts.	
II. QUALITY ASSURANCE PROGRAM	WEC 1.1 Management Review WEC 2.2 Project Quality Plan (PQP) WEC 4.16 Design Planning and Project Development WEC 18.1 Training	AP-2.1 Indoctrination and Training
III. DESIGN CONTROL	WEC 4.4 Reactor Coolant System Configuration WP-4.5 Design Analysis WEC 4.10 Design Specifications WP-4.17 Design Verification by Independent Review or Alternate Calculations WP-4.18 Test Control WP-4.19 Computer Software Development Process WP-4.19.1 Validation of Computer Software WP-4.19.2 Configuration Control of Computer Programs and Systems WP-4.19.3 Software Problem Reporting and Resolution WP-4.19.4 External Computer Software WP-4.19.5 Single Application Computer Programs WP-4.19.6 Maintenance of Configured Computer Programs	* AP-3.1 AP600 Systems Specification Documents #AP-3.2 Change Control for the AP600 Program AP-3.3 Design Analysis * AP-3.4 Functional Specification + AP-3.5 Design Reviews * AP-3.6 AP600 Design Criteria Documents * AP-3.7 Interface Control Document * AP-3.8 Design Specification (Component/Software) * AP-3.9 Preparation and Control of Drawings AP-3.10 Fluid Systems Design AP-3.12 Engineering Database Access #AP-3.13 Safety/Seismic Classification AP-3.14 Plant & Instrument Control System AP-3.15 System Piping & Instrument Control System #AP-3.16 Calculation Numbering & Filing #AP-3.17 AP600 Component Numbering AP-3.18 System Process Flow Diagram (PFD) Preparation AP-3.21 ASME Piping Design Specification
IV. PROCUREMENT DOCUMENT CONTROL	WEC 6.1 Control of Purchased Items and Services	

Quality Assurance Program Elements (Ref.: NQA-1)	Level 2 Implementing Procedures (1) WEC Policy/Procedure Manual	Level 3 Implementing Procedures (2)(4)
V. INSTRUCTIONS, PROCEDURES, AND DRAWINGS	WEC 2.1 Policies and Procedures WP-5.3 Preparation/Control of Drawings and Engineering Sketches	AP-5.1 SSAR Preparation Procedure AP-5.2 PRA Preparation Procedure #AP-5.3 AP600 Tier 1 Document Development #AP-5.6 Release of Documentation to NRC in Support of AP1000 Design Certification
VI. DOCUMENT CONTROL	WEC 5.2 Document Control WP-5.3 Preparation/Control of Drawings and Engineering Sketches	AP-0.0 Preparation and Control of Procedures #AP-6.1 Document Numbering #AP-6.2 Technical Document Release & Control #AP-6.3 Preparation, Review, & Approval of AP600 Documents
VII. CONTROL OF PURCHASED ITEMS AND SERVICES	WEC 6.1 Control of Purchased Items and Services WEC 6.3 Supplier Qualification and Evaluation	AP-7.1 #AP-7.2 Control of Subcontractor Submittals AP-7.3 Control of AP600 Contributed Labor AP-7.4 Auxiliary Equipment Design and Costing Process
XI. TEST CONTROL	WP-4.18 Test Control	
XII. CONTROL MEASURING AND TEST EQUIPMENT	WP-11.1 Control of Inspection, Measuring, and Test Equipment	
XV. CONTROL OF NONCONFORMING ITEMS	WP-13.3 Deviation Notices	

Quality Assurance Program Elements (Ref.: NQA-1)	Level 2 Implementing Procedures (1) WEC Policy/Procedure Manual	Level 3 Implementing Procedures (2)(4)
XVI. CORRECTIVE ACTION	WEC 14.1 WEC 14.2 Corrective Action WP-13.2 Control of Nonconformances	AP-16.1 Customer Feedback **AP-16.2 Corrective Action for Design Deficiencies or Errors
XVII. QUALITY ASSURANCE RECORDS	WEC 16.1	WCAP-14530, WEC Information and Records Management Program Manual: IRM-1.1 Organization and Responsibility IRM-3.2 Protection of Records on Optical Disk
XVIII. AUDITS	WEC 17.1	AP-18.1
(5) SUPPLEMENTAL PROGRAM DOCUMENTS	WEC 21.0 Identification and Reporting of Conditions Adverse to Safety	

NOTES:

(1) Level 2 WEC procedures are identified in this matrix with a "WEC" prefix. Level 2 division procedures from the WEC Policy/Procedures Manual, Nuclear Services and Projects Edition, are identified with a "WP" prefix.

(2) Level 3 procedures in APP-GW-GAP-100 are identified with an "AP" prefix. Other Level 3 procedures are as specified.

(3) Not used.

(4) Procedures that apply to design organizations external to Westinghouse are identified as follows:

- * These procedures apply only with respect to document format and content requirements.
- # These procedures apply only with respect to definition of interface responsibilities.
- + This procedure applies only with respect to Human Factors requirements.
- ** This procedure applies only with respect to criteria for issuing corrective action documents.

Procedures not marked as shown above do not apply to design organizations external to Westinghouse.

(5) Not an NQA-1 criterion.

Westinghouse Electric Corporation
Nuclear and Advanced Technology Division

AP600

Program Operating Procedure

Subject:

AP600 SYSTEM SPECIFICATION DOCUMENTS

Approved:
H. J. Bruschi, General Manager
Advanced Technology Business Area

Effective Date: 6-1-95

AUTHOR/COGNIZANT FUNCTION

Contact Manager, Systems Engineering, on questions concerning this procedure.

PURPOSE

To establish the responsibilities and requirements for preparing System Specification Documents for the AP600 plant.

DEFINITIONS

AP600 Plant Design Criteria (GW-G1-001) – This document provides plant level design criteria and is a design control document. The design criteria for System Specification Documents are to be consistent with the AP600 Plant Design Criteria, and should reference this document, as appropriate.

System Specification Documents (SSD) – Documents which identify specific system design requirements and show how the design satisfies the requirements. They provide a vehicle for controlling and documenting the formal systems design process and for transmitting system design data and interface requirements to all the affected AP600 design and analysis groups.

PROCEDURE

General

A. An SSD is prepared for each of the plant systems. Each SSD includes the functions of the system in the plant; the overall system design criteria and objectives; a complete description of the system and its operation; requirements for individual components, for system layout, for instrumentation and control, for interfacing systems, and for monitoring and testing; expected environmental conditions and qualification requirements; and a summary of compliance with external criteria.

B. The format and content of the SSDs shall conform to the guidance given in GW-GEP-020 (Reference A), AP600 SSD Writers Guide. In addition, each SSD shall include an AP600 Document Cover Sheet in accordance with Exhibit 10. Each SSD shall also include an AP600 Record of Changes in accordance with Exhibit 16.

C. The list of plant systems for which SSDs are to be prepared is provided in GW-GOX-001 (Reference B), List of AP600 Systems.

RESPONSIBILITY/ACTION

The following procedure applies to the preparation, revision, and issue of a System Specification Document:

Systems Engineering Design Group Manager

1. Issue a detailed writers guide for the SSDs to be prepared by the Design Groups.

2. Assign responsibility for the preparation of each SSD to a Systems Engineer. Assign responsibility for independent verification (peer review) and additional approvals (if any) required for design verification (for example, when the originating group lacks the expertise for complete verification).

Systems Design Engineer

3. Prepare the draft SSD in accordance with the Writers Guide.

4. Obtain independent verification (peer review) of the SSD in accordance with WCAP-9565, DP-3.3.2, "Design Verification by Independent Review or Alternate Calculations".

5. Resolve all comments from design verification.

6. Prepare AP600 Document Cover Sheet (Exhibit 10) including signatures. Obtain required design verification approvals using AP600 Standard Internal Review Sheet, Exhibit 17.

7. Issue the SSD in accordance with AP-6.2, Technical Document Release and Control.

Subsequent revisions to a System Specification Document shall follow the same sequence of actions as Steps #2 through #7 above. For each revision, the Record of Changes (Exhibit 16), shall include a description of significant changes along with the reason

for the change. Approval of the revision shall be obtained from the same groups that were originally required to approve the SSD. Procedure AP-3.2 Design Configuration Change Control will also apply to SSD revisions.

REFERENCES

A. GW-GEP-020, AP600 SSD Writers Guide

B. GW-GOX-001, List of AP600 Systems

FORMS/EXHIBITS

AP600 Document Cover Sheet, Form 58202, Exhibit 10

AP600 Record of Changes, Form 58204, Exhibit 16

AP600 Standard Internal Review Sheet, Form 58203, Exhibit 17

Westinghouse Electric Company LLC
New Plant Projects Division

AP600

Program Operating Procedure

Subject:

CHANGE CONTROL FOR THE AP600 PROGRAM

Approved: W. E. Cummins, General Manager, New Plant Projects Division

Effective Date: 6-1-99

AUTHOR/COGNIZANT FUNCTION	Contact Manager, Project Engineering & Integration [CCB Chairman], on questions concerning this procedure.
PURPOSE	This procedure defines the process and actions required to propose and implement a change to the design which has been previously released in a document for project use and placed under configuration control.
SCOPE	This procedure applies to the design under configuration control as reflected in technical documents, including, but not limited to, the following: I&C Equipment List System Specification Documents Functional Specifications Containment Specification Document Control & Protection System Functional Requirements Core Design Documentation Chemistry Specification NSSS Structural Design Interface Guidelines NSSS Design Transients Radiation Analysis Manual Fluid Systems Safeguards Data General Arrangement Drawings Piping & Instrumentation Diagrams Logic Drawings Equipment Outline Drawings General Assembly Drawings Concrete Outline Drawings Steel Framing Drawings Electrical One Line Drawings
DEFINITIONS	Tier 2 Information For AP600, Tier 2 information in the Design Control Document (DCD) is based on the Standard Safety Analysis Report (SSAR) and the Insights from the AP600 Probabilistic Risk Assessment (PRA). This is an NRC definition and does not allow its use as design input.

CCB Secretary
The person assigned the responsibility of documenting the CCB's decision for each DCP via the meeting minutes. See Appendix A for a detailed list of responsibilities.

Tier 1 Information
For AP600, Tier 1 information in the Design Control Document includes Inspections, Tests, Analyses, and Acceptance Criteria; and abbreviated Design Descriptions. This is an NRC definition and does not allow its use as design input.

Change Control
The systematic evaluation, coordination, and approval or disapproval of all proposed configuration changes.

Configuration Control Board (CCB)
A board of individuals drawn from various organizations and disciplines to review and disposition Design Change Proposals. The CCB uses the criteria established in Table 5 to disposition Class 1 DCPs. The organization and responsibilities of the CCB are defined in Appendix A.

Configuration Control
The process of managing proposed changes to the configuration items and related technical documentation which ensures that proposed changes to the plant design are identified, described, systematically reviewed and evaluated for impact, properly implemented upon approval, documented and completed.

Contributed Labor
Effort applied directly to the design of AP600 provided by employees of organizations other than Westinghouse or its compensated Subcontractors.

DCP Administrator (DCPA)
The person assigned the responsibility of updating and maintaining the DCP System database. See Appendix A for a detailed list of responsibilities.

DCP Approved for Design Certification
A DCP that is approved that does not affect the contents of the SSAR, PRA or ITAACs.

DCPs and document revisions approved for Design Certification will be designated with a "D" designation in the Technical Document Control data base field labeled "Design Basis."

DCP Approved for Post-Design Certification

A DCP that is approved by the CCB on the basis that the plant changes are considered worthwhile improvements, however implementation is to be delayed to preclude perturbing the Design Certification. In addition to having the CCB approval, approval of the NPPD General Manager is also required. The changes will be identified in the design by the plant owner or Combined Operating License (COL) Applicant.

DCPs and document revisions approved for Post-Design Certification will be designated with a "F" designation in the Technical Document Control data base field labeled "Design Basis."

DCP Classification

A design change proposal may be classified as Class 1, 2 or 3. Class 1 requires Westinghouse Project Manager concurrence and CCB approval. Class 2 requires only AP600 Project Manager approval. Class 3 requires only the Responsible Manager's approval. See procedure section for further detail.

DCP Closure

A DCP is considered closed, and ready for the archives, when all the impact reviews have been completed, all the review comments have been resolved, all the necessary information documented on the "50.59 Like" form (for DCPs originating after 8/1/96), any SSAR impacted changes identified, and necessary approvals obtained. A Class 1 DCP may be acted on by the CCB without all the impact statements available. If an impact statement is returned, after CCB approval, with an unresolved comment, the DCP will be resubmitted to the CCB.

DCP Number

The standard AP600 document number that is automatically issued by the DCP Tracking System and used by the DCP Administrator for overseeing the DCP process. The AP600 document number is in accordance with GW-GMP-005.

Design Certification Basis

A technical document listed in the SSAR Internal Reference data base as defining a feature or claim of AP600 that is included in the SSAR or PRA as being part of the design certification basis. The Technical Document data base must indicate that the revision is approved by the CCB for the design certification basis if appropriate.

Design Documentation

Those documents (including drawings) that control or specify the design, fabrication, installation, and test of a system or component or structure. Documentation that is placed under configuration control requires that the revision be changed from an alpha to a numeric revision number.

Design Change Proposal (DCP)

Form that documents the proposed change to the contents of design document(s) under configuration control. This includes any backup information. DCPs may be approved for incorporation into the Design Certification Basis or may be approved but not incorporated into the Design Certification Basis.

Design Change Review (DCR)

Form issued to collect impacts of change (scope/budget/ effect on design documents) from affected functional groups for Class 1 and 2 DCPs.

DCP Meeting Minutes

Formal record of CCB meeting proceedings and includes the CCB decision of each Class 1 or non-concurred Class 2 DCP. The CCB meeting minutes notifies the DCP Initiator and impacted organizations with a status of the DCP(s). (See Appendix C for content.)

DCP Review Package

A package containing a report of the DCP/DCR impacts and a copy of associated documentation if necessary. Class 1 DCP packages are transmitted to the initiator and CCB members prior to a CCB meeting. Class 2 DCP packages are transmitted to the Westinghouse Project Manager for approval.

DCP Tracking System

The method of tracking a DCP from initiation through closure. The DCP Tracking System provides reports that may be used as part of the DCP Review Package and Meeting Minutes and in identifying outstanding DCPs. Implementation of the DCP is verified via the Technical Document Control System.

DCP Summary Status Report

Report produced from the DCP Tracking System for Class 1 and 2 DCPs. DCP Summary Status Reports are issued to Project Management as requested. (See Appendix D for content.)

Engineer [DCP Initiator (DCPI)]

Any engineer within Westinghouse or Subcontractors' or Contributed labor organizations who initiates design changes.

The DCPI is also responsible for recommending the classification of a Class 1 or Class 2 DCP based on the criteria established in this procedure.

If the DCPI is not physically located at the Energy Center, then he/she is responsible for nominating an NPPD engineer as a proxy for the DCP.

NPPD General Manager

Selects the CCB Chairman and determines the makeup of the CCB. The General Manager is also responsible for the final decision in cases where the CCB does not reach a consensus for a Class 1 DCP, and for concurring with approval of DCPs approved for post-design certification.

Responsible Manager

The manager within Westinghouse or subcontractor's or Contributed labor organizations who is responsible for approving, implementing design changes for items within his/her scope of design, or providing impact to design changes initiated by other design organizations. The Responsible Manager approves whether the proposed change falls within Class 1, 2 or 3 criteria. DCPs are prepared for Class 1 or 2 changes and are forwarded to the Westinghouse Project Manager. The Responsible Manager approves and implements changes that fall within the Class 3 criteria.

Technical Document Control (TDC) System

A system that documents the document number/revision; lists all formally released documents and associated document data such as effective revision number, date released, responsible party; and identifies all the implemented/outstanding DCPs.

Westinghouse Project Manager

The Westinghouse manager responsible for the AP600 program. This manager is a member of the CCB. This manager is also the manager within Westinghouse responsible for confirming that Class 1 or Class 2 DCP's have been correctly classified and for dispositioning Class 2 DCP's using alternatives established in Table 6.

A flowchart of the procedure is given in Appendix B.

PROCEDURE

General

A. DCP Information within the AP600 Program

The DCP Tracking System should be checked for status, or information of a DCP including all impacts. When updating a document or drawing, each engineer should access the DCP Tracking System to ensure that all related DCPs are incorporated into the document or drawing.

B. CCB Meeting

A quorum of 100% is required to approve or disapprove a Design Change Proposal. All members are expected to attend each meeting personally; meetings are scheduled in advance to accommodate member availability. All members should either attend or arrange with another member to be represented by proxy and so notify the Chairman before the meeting. Only in unusual circumstances, such as extended absence, may a member designate a subordinate to act in his/her stead on any matter brought before the CCB. The CCB meeting attendees, including those members to whom proxies are given, are identified in the meeting minutes.

If a member is not present or represented at a meeting, he/she must indicate his concurrence with the decisions taken to the CCB chairman within five days of the meeting. This post-meeting concurrence will be recorded in the meeting minutes. In the event that the absent member

does not concur with the decisions, the CCB Chairman shall reconvene the meeting at a suitable time.

C. Design Changes due to Incorrect Design

If a design change is being proposed to correct an error that occurred in the design process, see Procedure AP-16.2 to determine the need for additional nonconformance documentation.

D. Determination if a proposed change requires a DCP Form

The engineer and the responsible manager in any of the organizations determine if the change falls within the Class 3 criteria. Class 3 changes are approved and implemented by the Responsible Manager. Other changes are submitted to the Westinghouse Project Manager using the DCP Form. The DCP Initiator shall determine, using the criteria defined in the procedure section whether the change is a Class 1 or 2. In his review of DCPs, the CCB Chairman shall consider the appropriate classification of the DCP.

E. Submittal of Proposed Design Changes by External Parties

If the initiator of the proposed design change is not located at the Energy Center, he/she shall nominate an NPPD Engineer as a proxy for the DCP.

F. DCP Submittal

The DCP Administrator shall receive any proposed Class 1 DCP at least one week before a CCB scheduled meeting. This is to allow time for sending and returning of DCRs. DCPs received ***later than the one week*** may be reviewed at CCB discretion. Class 2 DCPs shall be received and sent to impactees within a week of receipt. The DCP Administrator shall review each DCP for completeness and has the responsibility to return any DCPs that have information missing to the initiating party. The Administrator will return incomplete DCPs to the Responsible Manager within 16 working hours of receipt.

G. Class 1 & 2 DCP Design Certification Impact Review

Each Class 1 or 2 DCP shall be reviewed by the Manager, Advanced Plant Safety and Licensing to confirm that it has been correctly classified in terms of its Design Certification impact; that areas of impact on Design Certification have been correctly identified; and that affected Design Certification documents are correctly identified. Where there may be Design Certification impacts, the Manager, Advanced Plant Safety and Licensing, shall determine whether the proposed change affects the Design Certification Basis and indicate concurrence or disagreement accordingly. This review shall be conducted in parallel with the other impact assessments.

H. CCB Review of Class 1 DCPs Prior to CCB Meeting

A DCP review package that includes a report of the DCRs is prepared and transmitted by the DCP Administrator to the DCP Initiator at least a day before the CCB meeting. Additionally the report identifies any outstanding DCRs. The Administrator may provide a copy of the actual DCRs to the DCP Initiator, if necessary.

The DCP Administrator is responsible to reconcile DCR data, obtain missing DCRs prior to the CCB meeting, and file and update the DCP and TDC databases.

A final DCP review package that includes the summary report of the impacts is issued by the DCP Administrator to the DCP Initiator and CCB members in advance of the CCB meeting for review.

I. Westinghouse Project Manager Review of Class 2 DCPs

A DCP review package that includes the Design Change Proposal and a summary of the Design Change Review impacts is provided to the DCP Initiator, Responsible Manager and to the Westinghouse Project Manager by the DCP Administrator.

NOTE

THE WESTINGHOUSE PROJECT MANAGER MAY HAVE A MEETING WITH THE INITIATOR AND RESPONSIBLE MANAGER WHEN DISPOSITIONING A CLASS 2 DCP

J. DCP Supporting Design Documentation

All AP600 documents that are referenced in the DCP/DCR shall have an AP600 document number (alternate document numbers may be used, but only in addition to the AP600 document number). The DCP Administrator shall verify that an AP600 document number has been referenced in the DCP/DCR forms. If there is no AP600 number, the DCP Administrator shall contact the DCP Initiator/DCR Impactee and request that they obtain an AP600 document number.

K. Impactee Non-Concurrence with the Proposed Design Change

If one or more of the impactee reviewers do not concur with the proposed design change, the DCPA will forward a copy of these forms to the DCPI. The DCPI will try to resolve the problem(s) with the associated impactee(s). See main procedure for further details.

L. Class 1 DCP Disposition - CCB Meeting

The DCP Initiator will be responsible for preparing and presenting the proposed design change to the CCB; and for resolving impacts. The CCB reviews the DCP and its impacts and dispositions the DCP using Table 5. All CCB decisions are formally documented by the CCB Secretary via meeting minutes. See Appendix C for typical format.

CCB approval can be given in one of two categories. A change that does not impact the SSAR, PRA, ITAACs, or technical specification must be indicated as such as a condition of approval by the CCB. If the change does impact the Design Certification Basis, the DCP can be approved for post-Design Certification incorporation and the NPPD General Manager must concur as evidenced by his attendance at the appropriate CCB meeting or on other documentation provided by the CCB Chairman.

DCPs that are for post-Design Certification must be presented by the plant owner for approval by the appropriate regulatory agency (NRC) in the United States and may be required in other countries. Impacts to any of the Design Certification basis documents (Design Certification Document, SSAR, or PRA) must be explicitly identified and justified. A change markup package,

including a licensing justification and completed "50.59-like form" must be provided to the Manager, Advanced Plant Safety and Licensing. The package must include a certification impact evaluation addressing the items identified in Appendix F. The Manager, Advanced Plant Safety and Licensing, is responsible for determining if the content of the package is acceptable for future regulatory interactions and for ensuring the package(s) are properly stored until any interactions take place.

M. Class 2 DCP Disposition

The Class 2 DCP and its impacts are reviewed and dispositioned using Table 5 by the Westinghouse Project Manager. The disposition is documented along with a signature on the DCP Review Package. The disposition is then entered by the CCB Administrator in the DCP Tracking System.

N. Disapproval of Standard Class 1 Design Changes

In the event of the CCB disapproving a Class 1 DCP, the DCP Administrator updates the DCP database by statusing the DCP as R (rejected). The DCP Administrator then transmits the CCB minutes to the Responsible Manager who will inform the DCP Initiator of the CCB decision. The DCP must not be implemented.

O. Disapproval of Standard Class 2 Design Changes

In the event of the Westinghouse Project manager disapproving a Class 2 DCP, the DCP Administrator updates the DCP database by statusing the DCP as R (rejected).

P. DCP Implementation

The DCP Administrator will update the DCP Tracking System and issue a DCP Summary Status Report, on a monthly basis or as necessary, that identifies the DCP status and a list of all affected documents.

For Class 1 DCPs, the CCB meeting minutes will identify those DCPs that have been approved by the CCB which can proceed to be implemented.

For Class 2 DCPs, a summary report that identifies the status of the DCPs is issued to the DCP Initiator(s), Responsible Manager(s) and the Westinghouse Project Manager. All approved Class 2 DCPs can be implemented when the Westinghouse Project Manager approves the DCP.

The DCP Tracking System is integrated with the TDC System. The TDC System will include all approved DCPs. The DCP System provides a list of all issued DCPs and the affected documents (documents which need to be revised to incorporate the DCP).

RESPONSIBILITY	ACTION
	A flowchart of the procedure is given in Appendix B.
Engineer/ Responsible Manager	1. Any engineer desiring to make a change to the design determines with the Responsible Manager if the proposed change falls within the Class 1, 2 or 3 criteria. The Responsible Manager ensures that the proposed change conforms with the overall plan and direction of the AP600 Program, discussing the change with likely affected groups where appropriate. For DCPs that impact information contained in the Design Control Document, SSAR, PRA or ITAACs, the marked-up change pages shall be provided. The initiator shall also identify the potential impact on plant safety (see Appendix F) and compliance with URD requirements. A completed safety impact sheet (the current equivalent of Appendix F, "50.59 - Like Checklist for Certification Impact Evaluation" Form 58238 as determined by the DCPA) shall be completed.
Engineer	2. If the Proposed change falls within the Class 3 criteria, the engineer documents the change in detail on the Record of Change form for documents or ensures that it is properly reflected on the revision column for drawings. NOTE INTERFACING PARTIES NEED TO BE INFORMED THAT THE DOCUMENT HAS BEEN REVISED TO THE NEXT LEVEL EVEN IF THE CHANGE DOES NOT AFFECT THE INTERFACING PARTIES SCOPE

Responsible Manager	3.	Approves those proposed changes that fall within Class 3. Ensures that the changes are clearly defined in the Record of Change form or on the revision column of the drawings. The document/drawing may be revised to the next level.
Engineer	4.	Prepares a DCP Form if the proposed change falls within Class 1 or 2. Obtains a DCP number from the DCP Administrator. Completes the DCP Form, ensuring that the documents that are affected have an AP600 Document Number, attaches the required documentation, and submits it to the Responsible Manager for review and approval. Recommends whether the proposed design change should be submitted as a Class 1 or 2 DCP using the criteria defined in Tables 1 and 2. Unless otherwise assigned by the Responsible Manager, overall responsibility is vested in the Engineer to define all impacts accurately within his/her field, and to reconcile all impacts from other groups. NOTE THE DCP NEED NOT HAVE ALL SUPPORTING DOCUMENTS ATTACHED - ONE COPY MUST BE PROVIDED FOR THE OFFICIAL DCP FILE. SKETCHES, ILLUSTRATIONS THAT ARE NOT PART OF THE SUPPORTING DOCUMENTS SHOULD BE ATTACHED.
Responsible Manager	5.	Reviews the DCP for completeness and accuracy for those proposed changes that fall within the Class 1 or 2 criteria. Signs, dates and transmits the DCP to the Westinghouse Project Manager.
Engineer	6.	If the DCPI is not located at the Energy Center, he/she must nominate an NPD Engineer as proxy for the DCP.
Westinghouse Project Manager	7.	Evaluates the proposed design change and confirms based on the criteria defined in Table 1 or 2, that the proposed change is correctly classified.

		Documents the classification of the DCP on the DCP form via a signature/date. Transmits the DCP to the DCP Administrator.
DCP Administrator	8.	Receives all DCPs and ensures that an AP600 Document Number has been assigned to the affected AP600 documents. Reviews form for completeness, logs it into the DCP Tracking System, and issues a Design Change Form (DCR) to obtain the technical/schedule/budgetary/ affected document impact of the proposed change from affected functional reviewers as identified on the DCR.
Impacted Functional Group	9.	Reviews the proposed design change identified in the DCR (and any attachments) for impact to existing documentation that may have been developed previously. The impacted engineer completes the DCR, signs and dates the DCR, and sends it back to the DCP Administrator. If there is a need for other groups to review the DCR, the impacted functional reviewer should obtain the review. Additionally, for expediency, the engineer/manager could contact the DCP Administrator directly and identify the additional impacted groups. If the functional reviewer decides that the proposed DCP has no impact on his/her workscope and concurs with the change, then the appropriate item is selected on the DCR Form. The completed form is returned to the DCP Administrator.
DCP Administrator	10.	Once the impacts are collected via the DCR Form, the data is entered into the DCP Database, summarized and assembled into a DCP Review package. If any non-concurrences are identified, the DCPA shall return a copy of the non-concurring impactee(s) form(s) to the DCPI for resolution. The DCPA is responsible to ensure that all impactees have responded and that the impactees' inputs have been properly recorded in the DCR form.
Engineer [DCP Initiator]	11.	Responsible for compiling and identifying all issues, and where appropriate, reconciles DCR data (e.g., budgets, impacts). Also responsible to ensure that any areas of impact (additional to those he identified in the DCP) that are identified in the reviews are assessed and reported.

If an impactee raises a non-concurrence, the DCPI shall try to resolve the differences with the originator. There are 5 possible outcomes of these discussions:

11.1 The non-concurrences were not resolved.

The DCPI notifies the DCPA who generates an impact summary report which is taken to the next CCB meeting for resolution. (GO TO Step 13).

11.2 The non-concurrences were resolved, the DCP was withdrawn and a new DCP is required.

The DCPI documents how the non-concurrences were resolved and notifies the Westinghouse Project Manager, the Responsible Manager and the DCPA that the DCP has been withdrawn. The DCPA updates the DTS to reflect the latest status of the DCP and the DCPI then prepares a new DCP. The new DCP will need a new DCP number to be allocated by the DCPA.

11.3 The non-concurrences were resolved, the DCP was withdrawn and a new DCP is not required.

The DCPI documents how the non-concurrences were resolved and notifies the Westinghouse Project Manager, the Responsible Manager and the DCPA that the DCP has been withdrawn. The DCPA updates the DTS to reflect the latest status of the DCP.

11.4 The non-concurrences were resolved and changes are required to the DCP.

The DCPI documents how the non-concurrences were resolved and notifies the Westinghouse Project Manager, the Responsible Manager and the DCPA that changes are required to the DCP. The DCPA updates the DTS to reflect the latest status of the DCP. The revised DCP will adopt the same unique number as the original DCP but will be processed with a higher revision number. The DCPI/RM must then confirm that the classification of the revised DCP is correct and the approval process is repeated (GO TO Step 1).

11.5 The non-concurrences were resolved and there are no further changes required to the DCP.

DCP Administrator

12. The DCP Administrator reviews the DCP/DCR package, ensures that the DCP/DCR data is entered or updated into the DCP Database. Reports are prepared and assembled into a DCP Review package. A report identifying outstanding DCPs may be included. The distribution is as follows:

For Class 1 DCPs or Class 2 DCP's with unresolved non-concurrences, the DCP Review package is distributed to the CCB members and the DCP Initiator prior to CCB meeting for review [Go to Step 13].

For Class 2 DCPs, the DCP Review package is distributed to the Westinghouse Project Manager for final approval [Go to Step 16].

CCB Members/ Engineer

13. Prior to the CCB meeting, CCB members review the Class 1 DCP impact list and verify that the impacts obtained are reasonable and complete.

The CCB meets to review and disposition the DCP. The CCB uses the alternatives in Table 5 to disposition the DCP. The CCB members may make a judgement on whether or not sufficient impact statements have been collected at the time of the CCB meeting. During the meeting, the cognizant engineer presents the proposed change. The technical merits of the change, including input from impacted functional groups, are discussed.

If a consensus is reached on disapproval of the change, no further discussion of the change is required. The CCB Secretary records the CCB decision in the meeting minutes including any resolution of issues identified in the DCP/DCR Forms.

If consensus is not reached during the meeting, further discussion may be conducted at the next CCB Meeting if additional information/expertise is needed to resolve the issue. The DCP is "TABLED" until the next CCB meeting.

Approved changes, which do not impact the Design Certification Basis, SSAR, PRA, ITAACs, or technical

		specifications, must indicate this inclusion as a condition of approval by the CCB. If the change is approved and is outside the Design Certification Basis, the DCP must have NPPD General Manager concurrence, if not already obtained as specified above. The DCP documentation must include a safety evaluation addressing the items identified in Appendix F. If the CCB review of all available information still does not result in consensus, the decision will be referred to the Westinghouse NPPD General Manager. Normally, it is the responsibility of the initiator to resolve comments when they are part of a CCB approval condition. The CCB may assign the responsibility to resolve comments resulting from an approval action to someone other than the initiator as appropriate.
CCB Secretary	14.	Identifies to the DCP Administrator the status of each Secretary DCP reviewed in the CCB meeting. Prepares the CCB Meeting Minutes, obtains CCB Chairman approval signature and transmits the minutes to the DCP Initiator, impacted organizations and functional groups, and CCB members within two weeks of the CCB meeting.
DCP Administrator/ CCB Secretary	15.	Updates the DCP database based on the DCP disposition as identified by the CCB Secretary. Ensures that the DCP database is complete for each DCP. Prepares a report for inclusion with the meeting minutes. Transmits the official DCP file [DCP/DCR Forms and attachments, if any] to the AP600 Central Files.
Westinghouse Project Manager	16.	Dispositions Class 2 DCPs using Table 6. Before approval, Class 2 DCPs must obtain the concurrence of the Manager, APSL. The Westinghouse Project Manager documents his decision on the DCP Review Package and dates/signs. The completed DCP Review Package [DCP/DCR Forms and attachments, if any] is returned to the DCP Administrator.
DCP Administrator	17.	Updates the DCP status on the DCP Tracking System for Class 2 DCPs based on the DCP Review Package disposition. The DCP Administrator transmits the original

		of the official "final" completed DCP Package to the AP600 central files and a copy to the impactees and initiator, including the manager responsible for AP600 licensing.
Responsible Manager for AP600 Licensing	18.	For approved DCPs outside the Design Certification Basis, ensures that an appropriate change description package is placed into the file for processing through NRC, or other regulatory body, by the owner when applying for an operating license.
Impacted Functional Group Managers	19.	The Managers of the Westinghouse Functional Engineering, Subcontractors and contributed labor which have been notified of the approved DCP implement the change. External groups [other Westinghouse divisions, Subcontractors, contributed labor] use their internal procedures to implement the change.
Responsible Manager for Document/Drawing	20.	By signature on implementing document cover sheet or on the or drawing, the Responsible Manager ensures that the design change defined in the approved DCP has been incorporated in the document or drawing. Ensures that the DCP number and revision is referenced on the document cover sheets or in the revision block of drawings. Ensures that the updated document/drawing is transmitted to the AP600 central files.
DCP Administrator	21.	Updates the TDC tracking system to reflect the latest document revision and enters the DCP number and revision, as noted on the document cover sheet or drawing revision block, against the specific AP600 document
DCP Administrator	22.	Accesses the TDC tracking system and prints out the DCP/TDC comparison report to monitor DCP implementation. Periodically, this report is issued to the Westinghouse Project Manager as information.

REFERENCES

AP-6.1, "Document Numbering"
AP-6.2, "Technical Document Release and Control"
AP-3.9, "Preparation and Control of Drawings"
AP-16.2, "Corrective Action for Design Deficiencies or Errors"
GW-GMP-005, "AP600 Document Numbering Procedure"
GW-G0Y-002, "AP600 Configuration Control Plan"

FORMS/EXHIBITS	Design Change Proposal, Form 58184, Exhibit 11 Design Change Review, Form 58185, Exhibit 12 Record Of Changes, Form 58204, Exhibit 16 AP600 Standard Internal Review Sheet, Form 58203, Exhibit 17 AP600 Document Cover Sheet, Form 58202, Exhibit 10 AP600 Design Specification Cover Sheet, Form 58205, Exhibit 18	
TABLES	1.	Class 1 DCP Criteria
	2.	Class 2 DCP Criteria
	3.	Class 3 DCP Criteria
	4.	AP600 Systems Analyzed in PRA
	5.	CCB decision/DCP disposition and database status codes
APPENDICES	A.	Westinghouse Configuration Control Board (CCB) Organization
	B.	CCB Meeting Minutes (Contents)
	C.	Content of DCP Summary Status Report for Class 1 and 2 DCPs
	D.	Document Cover Sheet/Record of Change/Internal Review Sheet/and Drawing Block Samples
	E.	"50.59-Like" Checklist for Certification Impact Evaluation

TABLE 1 - CLASS 1 DCP CRITERIA

Requires Westinghouse Project Manager Concurrence and CCB Review and Approval Prior to Implementation

• Potential Total Cost Impact on Design Certification, or FOAKE, or Construction Exceeds $100,000
• Proposed Change causes a URD Non-Conformance
• Design Certification Impact - change to safety principles, basis of safety arguments, safety analysis interface data as defined by the Safeguards Interface List, PRA interface data from systems listed in Table 4, ERG, or sections outside scope of DCP initiator.
• Issue has high visibility with customers [DOE, EPRI, ARC, USC, USG]
• There is known dispute with the change from interfacing design organizations
• Degradation of material property, standardization, or other significant reductions in design margins
• Design Certification Impact-change to SSAR, PRA, or Tier 1 Information (DCD or ITAACS).

TABLE 2 - CLASS 2 DCP CRITERIA

Requires ONLY Westinghouse Project Manager Review and Approval Prior to Implementation

• Potential total cost impact on program exceeds $25,000
• The change impacts interfaces with three or fewer non-mandatory areas of impact beyond initiator
• Does not comply with Class 1 criteria

TABLE 3 - CLASS 3 DCP CRITERIA

Requires ONLY Responsible Manager Review and Approval Prior to Implementation

• The change is limited to the Responsible Manager's work scope and there is no impact on interfaces with other design organizations or design groups
• The potential cost impact is less than $25,000
• Does not comply with Class 1 or 2 criteria

Note: Class 1, 2 and 3 changes are "major changes" in terms of ASME NQA-1 Supplement 6S-1.

TABLE 4 - AP600 SYSTEMS ANALYZED IN PRA

- Main and startup feedwater
- Passive residual heat removal
- Depressurization system/overpressure protection
- Core makeup tank
- Accumulator
- Gravity injection and recirculation
- Normal residual heat removal
- Containment isolation
- Passive containment cooling
- Chemical and volume control
- Reactor coolant pump trip
- Component cooling water
- Service water
- Chilled water
- Integrated protection and control
- Reactor trip
- Onsite ac power
- Onsite dc power
- Containment hydrogen control
- Compressed air/instrument air
- Diverse actuation

TABLE 5 - CCB DECISION/DCP DISPOSITION AND DATABASE STATUS CODES

CCB DECISION	DCP DATABASE STATUS	EXPLANATION
APPROVED	A = Approved as within Design Certification C = Approved as within Design Certification with comments P = Approved for Post-Design Certification Incorporation with or without comments	DCP can be implemented Required actions, as recorded in the meeting minutes, are mandatory before DCP implementation. Resolution is to be recorded in the open item report and the manager of AP600 licensing file for "P" DCPs.
TABLED	T = Tabled, Pending Further Receipt of Data	A DCP is "Tabled" or put on hold by the CCB pending further information. The DCP may be reviewed at a future CCB Meeting. Once data and resolution is obtained the DCP status is changed to a different category.
REJECTED	R = Rejected	A DCP is rejected by the CCB and is not to be implemented.
WITHDRAWN	W = DCP Withdrawn from CCB consideration	In the event that the DCP was initiated but withdrawn from consideration prior to a CCB meeting, this category is selected.
SUPERSEDED	S = Superseded	The DCP has been replaced by a new DCP with a different DCP unique number or the DCP has been replaced by a subsequent revision.
VOID	V = Void	The DCP has been prepared or assessed incorrectly and has been withdrawn.
ON-HOLD	H = On Hold by DCP Administrator	The DCP Administrator is awaiting some additional information from the DCP Initiator, the Impact Reviewers or the DCP assessors.

APPENDIX A

WESTINGHOUSE AP600 CONFIGURATION CONTROL ORGANIZATION

CHAIRMAN, CCB Responsibilities:

- Administers Westinghouse Configuration Control Process in accordance with this procedure
- Calls CCB meetings as necessary
- Chairs CCB meetings
- Appoints CCB Secretary and DCP Administrator
- Reviews and approves the CCB Meeting Minutes
- Serves as focal point with customer on Design Change Proposals
- Reviews Class 2 DCPs and completes the DCR Form

CCB MEMBERS Responsibilities:

- Review Design Change Proposals and associated Design Change Review impacts prior to meetings
- If necessary, invite to CCB meetings additional personnel with specific expertise to assist in resolution of DCPs
- Review the DCP Impacted List to ensure that all affected groups have been identified and contacted to obtain all impacts

WESTINGHOUSE PROJECT MANAGER Responsibilities:

- Review Design Change Proposals and confirm that the DCP is correctly classified
- Transmits DCPs to the DCP Administrator for processing
- Dispositions the Class 2 DCPs and documents decision on the DCP Review Package
- Manages implementation of approved DCPs

CCB SECRETARY Responsibilities:

- Attends CCB meetings
- Documents in the meeting minutes the CCB decision and/or action items for each DCP
- Prepares and issues the CCB meeting minutes
- Transmits the CCB meeting minutes to CCB members, DCP Initiator(s), DCP impactees, and others as necessary

DCP ADMINISTRATOR Responsibilities:

- Attends CCB meetings, as required
- Maintains Westinghouse DCP tracking system for Class 1 and 2 DCPs
- Logs into DCP database and assigns a DCP Number
- Issues DCRs to functional groups for Class 1 and 2
- Reviews [administrative not technical review] the DCP/DCR forms for completeness including signatures and dates
- Returns to DCP Initiator or impactee incomplete DCPs/DCRs
- Enters the data from the DCP/DCR into the DCP database
- Ensures that all impactees have responded to DCP
- Maintains the official DCP file [DCPs, DCRs, and associated documentation]
- Prepares a list of all DCRs received
- Obtains from the DCP Initiator the completed DCRs and ensures that all the DCR data is entered into the DCP database
- Prepares the DCP Review Package and transmits it to the DCP Initiator and CCB for their review and preparation prior to the CCB meeting
- Ensures that the DCP tracking system is updated with the CCB decision for each DCP
- Updates the TDC tracking system
- Transmits the official DCP package for Class 1 and 2 to central files
- Prepares and issues a Class 1 DCP status report to Project Management as requested
- Prepares and issues a Class 2 DCP status report and transmits it to the Westinghouse Project Managers [with copy to CCB members] on a monthly basis or as needed
- Prepares and issues periodic reports of outstanding DCPs [DCP/TDC comparison report]. Outstanding Class 1 DCPs are be identified to the CCB and outstanding Class 2 DCPs are identified to the Westinghouse Project Manager

APPENDIX B

CONFIGURATION CONTROL BOARD MEETING MINUTES (CONTENTS)

Key Elements Contained in CCB Meeting Minutes For Each Class 1 or non-concurred Class 2, DCP acted upon in the CCB Meeting:

- Attendance List including proxies
- DCP Number and Revision, and Title
- Description of CCB meeting proceedings
- CCB Disposition
- Actions for DCP Initiator or others, if any, resulting from the meeting
- Resolutions of previously identified actions, if any

Appendices (Optional)

- DCP Summary Status Report
- A copy of the DCPs, if necessary

APPENDIX C

CONTENT OF DCP SUMMARY STATUS REPORT FOR CLASS 1 DCPs

- DCP Number and Revision
- DCP Title
- CCB Disposition and Date [See Table 5]
- DCP Cost Summary
- List of Impacted Organizations/Statements
- List of Affected Documents
- Final DCP Status [Approved, Rejected, Withdrawn]

CONTENT OF DCP SUMMARY STATUS REPORT FOR CLASS 2 DCPs

- DCP Number and Revision
- DCP Title
- Westinghouse Project Manager Disposition and Date [See Table 6]
- DCP Cost Summary
- List of Impacted Organizations/Statements
- List of Affected Documents
- Final DCP Status [Approved, Rejected, Withdrawn]

CONTENT OF TDC/DCP COMPARISON STATUS REPORT

The TDC reports per AP-6.2 will also identify the following:

- Outstanding DCP Numbers and Revision and the affected Documents

APPENDIX D

AP600 DOCUMENT COVER SHEET/RECORD OF CHANGE/ AND DRAWING REVISION BLOCK SAMPLES

AP600 COVER SHEET

- The DCP Number and revision shall be shown on the cover sheet in the appropriate block.

RECORD OF CHANGE FORM

- The DCP Number and revision shall be shown on the change description and reason area.

DRAWING REVISION BLOCK

- The DCP Number and revision shall be shown on the Revision block area of the drawing.

APPENDIX D (Continued)

AP600 DOCUMENT COVER SHEET/RECORD OF CHANGE/ AND DRAWING REVISION BLOCK SAMPLES

AP600 DOCUMENT COVER SHEET

TDC: _____ IDS: I _____ S _____

Form S8202G(5/94) [t:\xxxx.wpt:ts] AP600 CENTRAL FILE USE ONLY:

0008.FRM RFS#: RFS ITEM #:

AP600 DOCUMENT NO.	REVISION NO.		ASSIGNED TO
GW-GOY-999	1	Page 1 of___	NOT APPLICABLE

ALTERNATE DOCUMENT NUMBER: N/A WORK BREAKDOWN #: GWGZ

DESIGN AGENT ORGANIZATION: WESTINGHOUSE

TITLE: SAMPLE DOCUMENT

ATTACHMENTS: NONE

DCP #/REV. INCORPORATED IN THIS DOCUMENT
REVISION: TYPICAL DCP'S
94-888/0 PRE 2/94
GW-GEE-989/1

CALCULATION/ANALYSIS REFERENCE: N/A

ELECTRONIC FILENAME	ELECTRONIC FILE FORMAT	ELECTRONIC FILE DESCRIPTION
GWGZ1.WPF GWGZ2.WPF		

(C) WESTINGHOUSE ELECTRIC CORPORATION 19___

☒ WESTINGHOUSE PROPRIETARY CLASS 2
This document contains information proprietary to Westinghouse Electric Corporation; it is submitted in confidence and is to be used solely for the purpose for which it is furnished and returned upon request. This document and such information is not to be reproduced, transmitted, disclosed or used otherwise in whole or in part without prior written authorization of Westinghouse Electric Corporation, Energy Systems Business Unit, subject to the legends contained hereof.

☐ WESTINGHOUSE PROPRIETARY CLASS 2C
This document is the property of and contains Proprietary Information owned by Westinghouse Electric Corporation and/or its subcontractors and suppliers. It is transmitted to you in confidence and trust, and you agree to treat this document in strict acceptance with the terms and conditions of the agreement under which it was provided to you.

☐ WESTINGHOUSE CLASS 3 (NON PROPRIETARY)

COMPLETE 1 IF WORK PERFORMED UNDER DESIGN CERTIFICATION OR COMPLETE 2 IF WORK PERFORMED UNDER FOAKE.

1 ☐ DOE DESIGN CERTIFICATION PROGRAM - GOVERNMENT LIMITED RIGHTS STATEMENT [See page 2]

Copyright statement: A license is reserved to the U.S. Government under contract DE-AC03-90SF18495.

☐ DOE CONTRACT DELIVERABLES (DELIVERED DATA)
Subject to specified exceptions, disclosure of this data is restricted until September 30, 1995 or Design Certification under DOE contract DE-AC03-90SF18495, whichever is later.

EPRI CONFIDENTIAL: NOTICE: 1☐ 2☐ 3☐ 4☐ 5☐ CATEGORY: A☐ B☐ C☐ D☐ E☐ F☐

2 ☒ ARC FOAKE PROGRAM - ARC LIMITED RIGHTS STATEMENT [See page 2]

Copyright statement: A license is reserved to the U.S. Government under contract DE-FC02-NE34267 and subcontract ARC-93-3-SC-001.

☒ ARC CONTRACT DELIVERABLES (CONTRACT DATA)
Subject to specified exceptions, disclosure of this data is restricted under ARC Subcontract ARC-93-3-SC-001.

ORIGINATOR	SIGNATURE/DATE	
JANE DOE	Jane Doe 6/1/95	
AP600 RESPONSIBLE MANAGER	SIGNATURE*	APPROVAL DATE
P. SMITH	P. Smith	6/1/95

*Approval of the responsible manager signifies that document is complete, all required reviews are complete, electronic file is attached and document is released for use.

APPENDIX D (Continued)

AP600 DOCUMENT COVER SHEET/RECORD OF CHANGE/ AND DRAWING REVISION BLOCK SAMPLES

AP600 RECORD OF CHANGES

Form 58204 (1-91)

AP600 DOCUMENT NO. GW - GOY - 999 REVISION 1

ALTERNATE DOC. NO. N/A

DESIGN AGENT ORGANIZATION WESTINGHOUSE

TITLE SAMPLE DOCUMENT

CHANGE NUMBER	PARAGRAPH NUMBER	CHANGE DESCRIPTION AND REASON	ENGINEER APPROVAL/DATE
1	1.2	DCP GW - GEE - 999/1 WAS INCORPORATED	2/23/94

APPENDIX D (Continued)

AP600 DOCUMENT COVER SHEET/RECORD OF CHANGE/ AND DRAWING REVISION BLOCK SAMPLES

A

WBS. FOAPGWGZ
SD. 2PST-280
D. 727A77

1

IT.	REVISION
	ECN-87156 GW-GEE-999/1
	GENERAL REARRANGEMENT OF PROCESS AREAS AT ZONE (D-7) DELETED 2 SUMPS AT ZONE (F-4) CORRECTED MSF COLUMN LOCATIONS AND SPACING T. MILLSLAGLE 1/1/94

2

STANDARD DCP NUMBER 3/94

3

8

7

APPENDIX E

"50.59-Like" Checklist for Certification Impact Evaluation
DCP GW-GEE- _____

"50.59-Like" Checklist for Certification Impact Evaluation

	Yes	No
1. Will the change reduce the safety of AP600?	☐	☐
If YES, complete all questions below and provide explanation of safety reduction and justification for change. If NO, continue with questions 2 and 3 and follow subsequent instructions.		
2. Will the change require modification to a design certification basis document (identified with a "D" in "Design Basis" field of TDC)?	☐	☐
3. Will the change require modification to input data for PRA?	☐	☐
If NO to both 2 and 3, STOP here and sign at bottom. If YES to either 2 or 3, describe impact and answer questions 4, 5, 6, and 7.		
4. Will the change require modification to ERGs or other AP600 related WCAP?	☐	☐
5. Will the change require modification of the SSAR, including technical specifications?	☐	☐
6. Will the change require modification of PRA insights (when issued)?	☐	☐
7. Will the change require modification of an issued TIER 1 (ITAAC) section?	☐	☐
If NO to ALL of 4, 5, 6, & 7 STOP here and sign at bottom. If YES to ANY of 4, 5, 6, or 7 provide markups of affected pages and answer the following questions.		
8. Will the probability of occurrence of an accident previously evaluated in the SSAR be increased?	☐	☐
9. Will the radiological consequence of an accident previously evaluated in the SSAR be increased?	☐	☐
10. Will the probability of a malfunction of a safety-related or defense-in-depth structure, system or component previously evaluated in the SSAR be increased?	☐	☐
11. Will the radiological consequence of a malfunction previously evaluated in the SSAR be increased?	☐	☐
12. Will the possibility of an accident of a different type than previously evaluated in the SSAR be increased?	☐	☐
13. Will the possibility of a malfunction of a different type than previously evaluated in the SSAR be created?	☐	☐
14. Will the margin of safety as defined as the basis for any technical specification be reduced?	☐	☐

For any YES answers, provide explanation.

_____
Responsible Engineer Printed

_____
Responsible Engineer Signature

NOTE: This form is required to meet the requirements of WCAP-12601 AP-3.2

Form 58238 (6/96)

Westinghouse Electric Corporation
Nuclear Projects Division

AP600

Program Operating Procedure

Subject:

DESIGN REVIEWS

Approved: H. J. Bruschi, General Manager
Nuclear Projects Division

Effective Date: 2-18-97

AUTHOR/COGNIZANT FUNCTION	Contact Manager, AP600 Quality Assurance, on questions concerning this procedure.
PURPOSE	This procedure describes the method for preparing, conducting, and documenting formal Design Reviews (DR) performed for the purpose of Design Verification. This procedure may also be used as a guide for non-verification Design Reviews.
SCOPE	This procedure applies to all Design Reviews conducted for the AP600 project.
DEFINITIONS	See Procedure ESBU 4.12

General

Design Reviews for the AP600 project shall be performed in accordance with procedure ESBU 4.12 of the ESBU Quality Policy/Procedure Manual with the following modifications:

1. In addition to the responsibilities established in ESBU 4.12, the Cognizant Design Manager is responsible for:

   a. obtaining an AP600 document number for the design review report, and

   b. ensuring that design review action items are entered into the AP600 open item tracking system.

2. The Cognizant Design Manager, rather than the Design Review Chairman, is also responsible for following design review action items and ensuring that they are completed.

3. The general design review checklist per ESBU 4.12 is provided for guidance. Alternate checklists may be used as deemed appropriate by the Design Review Chairman. In any case, in addition to the responsibilities established in ESBU 4.12, the Design Review Chairman is responsible for determining the applicability of the Human Factors Checklist per Appendix A of this procedure and incorporating it into the review as applicable.

4. Intermediate and Final Design Reviews shall include a review of the Preliminary and Intermediate Design Reviews (respectively) to assure closure of outstanding actions.

5. The Design Review report format is given in Appendix B of this procedure.

REFERENCES

A. ESBU Quality Policy/Procedures Manual

FORMS/EXHIBITS

AP600 Document Cover Sheet, Form 58202, Exhibit 10

APPENDICES

A. Human Factors Engineering Checklist

B. Design Review Report Format

APPENDIX A

HUMAN FACTORS CHECKLIST

A. Product/User Identification:

1. Are the objectives of the product-user system appropriately defined?

2. Are the functions required to achieve the product-user system objectives appropriately defined?

3. Are the functions shared between the user and the product allocated in a way that most effectively utilizes the capabilities of each (automation or manual or combination)?

4. Are the users' tasks appropriately defined for anticipated modes of operation?

5. Has an operating experience review been conducted to identify human factors issues encountered in previous designs so that they can be avoided in the development of the current system, or in the case of positive features, to ensure their retention?

B. Information Requirements for the Human-System Interface:

1. Are the user's information requirements clearly defined for each of the tasks defined above?

2. Do the displays, reference materials, and navigation links appear to satisfy these information requirements by providing the required amount of data with the necessary accuracy and response time?

3. Are data presented in a concise, directly usable form? If not, can the user interpret the provided data quickly and accurately enough to complete the identified tasks successfully?

4. Have the data provided to the user been limited to that which is necessary to satisfy the identified information requirements?

C. Data Presentation and Controls for the Human-System Interface (HSI):

1. Do control and display hardware and organization appear to match operational requirements as defined by utility requirements?

2. Are numeric data presented in units which the user expects and understands? Does the range of numeric displays encompass minimum and maximum operational values?

APPENDIX A (Continued)

3. Are the schemes for labeling and coding controls, displays, and data legible, meaningful, and consistent? Does the HSI design follow a set of HSI design guidelines so that there is consistency across displays and controls?

4. Does the HSI resource include features to minimize errors and facilitate users in detecting, and recovering from, potential errors they may make?

5. Are display mechanisms fault-tolerant? For example, are there provisions for loss of color in a CRT display, are there provisions for loss of an indicator light, etc.?

6. Do the displays include data quality coding to clearly indicate when sensors have failed or values are out-of-range?

D. Work Station (Operation and Control Center System; MCR, TSC, RSR, Local):

1. Do the physical dimensions of the HSI resource take into account reach, strength, and sensory limitations throughout the range of anticipated users?

2. Does the layout of the HSI resource provide an optimal arrangement for interactions between users and between the user and the equipment?

3. Do the illumination, sound, temperature, and ventilation levels permit the user to perform required tasks satisfactorily?

4. Are there provisions for the user's safety and comfort?

E. Maintenance and Repair:

1. Have the maintenance requirements of the HSI resource been evaluated and documented?

2. Do maintenance and repair tasks for the HSI resource place reasonable technical and physical demands on service personnel?

F. Design Verification:

1. Is the HSI resource evaluated through walk-through studies, simulation studies, or some analysis to verify that the product-user system objectives (see A.4 above) and functions have been achieved?

APPENDIX B

DESIGN REVIEW REPORT FORMAT

COVER PAGE	AP600 Document Cover Sheet, Form 58202
AP600 DOCUMENT NUMBER	A document number should be assigned to the Design review report in accordance with GW GMP 005, "Document Numbering Procedure."

SECTION	TITLE
1	Introduction

Give data and place of design review; identify design review Chairperson, members, and secretary.

2 Scope

Define scope of the design review (e.g., "Scope was to evaluate the design impacts involved in changing from Design "A" to Design "B").

3. Summary

State the number of action items and provide an overview of the action item concerns.

4. Conclusion

State DR committee's conclusion(s) based on material presented in the DR meeting(s).

5. Attachments

a. List of all presenters and observers in attendance at the Design Review meeting(s)

b. Design Review Information Sheet(s)

c. Design Review agenda which identifies the items presented in the Design Review meeting(s)

d. Action Item Chits issued

e. List and copy of the Design Review presentations

Westinghouse Electric Corporation
Advanced Technology Business Area

AP600

Program Operating Procedure

Subject:
AP600 Design Criteria Documents

Approved:
H. J. Bruschi, General Manager
Advanced Technology Business Area

Effective Date:
03-11-94

AUTHOR/COGNIZANT FUNCTION

Contact Manager, AP600 Plant Engineering, on questions concerning this procedure.

PURPOSE

This procedure establishes requirements for the preparation, review, approval and revision of Design Criteria Documents for the AP600.

SCOPE

This procedure applies to all AP600 Design Criteria Documents prepared by Westinghouse. AP600 contractors will prepare Design Criteria Documents in accordance with their own procedures using a format similar to that defined in this procedure.

DEFINITIONS

Design Criteria Document - A document defining requirements for design of specific aspects of the AP600. Typically these documents cover a single discipline or subdiscipline.

Design Criteria Manual - A Manual that incorporates the top level Design Criteria Documents.

Responsible Manager - The individual who identifies the need for a Design Criteria Document and is responsible for its preparation in accordance with this procedure.

Responsible Engineer - The engineer who is assigned to develop the Design Criteria Document.

PROCEDURE

General

A. A Design Criteria Document is prepared to define criteria for use in subsequent design activities. It translates safety, licensing and contractual requirements into detail design requirements in order to assure a uniform design basis within all engineering activities.

B. Design Criteria Documents are intended to provide mandatory requirements for subsequent design activities. The documents can be supplemented as required by design guides if guidance rather than mandatory requirements are to be defined.

C. The initial issue and all subsequent revisions shall be prepared in accordance with the detailed procedure described below.

D. A Design Criteria Manual will be compiled consisting of top level Design Criteria Documents. It will include documents prepared by Westinghouse under this procedure as well as documents, prepared by other AP600 contractors, reviewed and approved for project use by Westinghouse.

E. Alphabetic revision symbols shall be used prior to placement of the criteria document under configuration control. Thereafter, numeric revision symbols shall be used. Revisions require change approval in accordance with the change control procedure (AP-3.2). The design change number shall be identified on the cover sheet. All technical changes shall be listed on the Record of Changes Sheet and shall be identified by a vertical line in the margin. The complete document will be reissued for each revision.

F. Plant Engineering coordinates preparation and completion of the Design Criteria, coordinates AP600 Contractor preparation and review of Design Criteria Documents and assists in integration, review and approval cycles.

Responsibility	Action
Responsible Manager	1. Identifies need for a Design Criteria Document within his area of responsibility and define the scope of the document.
	2. Assigns responsibility for the preparation of the Design Criteria Document.
	3. Identifies interfacing organizations that will provide input, review and/or approve the Design Criteria Document.
Responsible Engineer	4. Prepares the Design Criteria Document utilizing the format and content guidelines identified in Appendix A.
	5. Obtains a document number in accordance with the standard AP600 numbering system (GW GMP 005).
	6. Ensures that all design inputs used in the preparation of the document are protected in accordance with the applicable records flow schedule.
	7. Distributes copies of the draft document to reviewers and others, as required.

Responsible Manager	8. Assigns an independent verifier to verify the document.
Independent Verifier	9. Reviews document for adequacy, correctness and completeness.
Interfacing Groups	10. Review and comment on the draft document.
Responsible Engineer	11. Resolves comments on the document generated during the review process.
	12. Obtains required approval signatures on the cover and internal review sheet.
Responsible Manager	13. Ensures that the Responsible Engineer has resolved comments with the verifier and mandatory reviewers and has obtained approval signatures on the sign-off sheet.
	14. Reviews, approves and signs-off the Design Criteria Document.
Responsible Engineer	15. Releases the Design Criteria Document to Program Control and Contract Administration.
Program Control and Contract Administration	16. Distributes the Design Criteria Document as specified by the responsible engineer. Incorporates document in AP600 records.
Plant Engineering	17. Identifies the top level criteria documents to be included in the Design Criteria Manual and identifies the distribution list for the Design Criteria Manual.
Program Control and Contract Administration	18. Distributes the Design Criteria Documents selected for inclusion in the Design criteria Manual to the controlled distribution.

REFERENCES

A. AP-3.2, Design Configuration Change Control for AP600 Program, Phase 2

B. GW GMP 005, AP600 Document Numbering

FORMS / EXHIBITS

AP600 Document Cover Sheet - Exhibit 10
AP600 Standard Internal Review Sheet - Exhibit 17
AP600 Record of changes - Exhibit 16

APPENDICES

Appendix A Design Criteria Format and Content

APPENDIX A
DESIGN CRITERIA FORMAT AND CONTENT

The Design Criteria Document shall be prepared using the following forms:

AP600 Document Cover Sheet - in accordance with Exhibit 10
AP600 Standard Internal Review Sheet - in accordance with Exhibit 17
AP600 Record of Changes - in accordance with Exhibit 16

Subsequent pages shall include "AP600 Design Criteria Westinghouse Proprietary Class 2" in the header and the AP600 document number, revision number, page number and date in the footer.

The Design Criteria Document shall include a Table of Contents with the following sections:

Section	1.0	Introduction
		1.1 Purpose and Scope
		1.2 Background
		1.3 Definitions and Acronyms
Section	2.0	Codes and Standards
Section	3.0	and subsequent section numbers may be selected by the author
Section		References shall be the last section
Appendices		

The Design Criteria Document shall define the criteria in sufficient detail that design of the plant in accordance with the criteria will meet all technical and licensing requirements. The document shall consider the following design inputs:

a) Regulatory requirements. If the design criteria include any exceptions from Regulatory Guides, Standard Review Plans or other licensing documents, such exceptions shall also be documented in the "AP600 Compliance with SRP Acceptance Criteria" (GW GL 001).

b) ALWR Utility Requirements. If the design criteria include any exceptions from the Utility Requirements Document, such exceptions shall also be documented in the "Comparison of AP600 Design with the Utilities Requirements Document".

Section 2.0 identifies the Codes and Standards imposed on the user of the criteria document, and is distinct from references which are provided in the last section to describe where requirements come from or to provide assistance to the user in understanding the criteria. In general, Regulatory Guides, Standard Review Plan sections and ALWR sections should be identified in the references and not in Section 2.0. AP600 requirements implementing the position should be incorporated in the body of the criteria document. Thus, any interpretation of the Regulatory or URD requirements is done by the Responsible Engineer for the Design Criteria Document and reviewed by all interfacing groups.

Westinghouse Electric Corporation
Nuclear and Advanced Technology Division

AP600

Program Operating Procedure

Subject:

INTERFACE CONTROL DOCUMENT

Approved: H.J. Bruschi, Director AP600 Program

Effective Date: Feb. 8, 1991

AUTHOR / RESPONSIBLE FUNCTION

Contact Manager, Nuclear Equipment Engineering, for questions concerning this procedure.

PURPOSE

This procedure establishes the requirements and responsibilities for developing, approving, implementing, revising and maintaining Interface Control Documents (ICDs) related to the AP600 Program.

SCOPE

This procedure applies to all ICDs that are to be developed for AP600 systems, equipment or computer software that interacts with equipment or software being designed by organizations.

DEFINITIONS

AP600 CONFIGURATION CONTROL BOARD (CCB) – A board of individuals drawn from various organizations and disciplines to review and approve (or disapprove) Design Change Proposals (See Figure A) and to determine whether proposed changes require DOE review and approval. The CCB organization is defined in the AP600 Program Operating Procedure, AP-3.2, "Design Configuration Change Control for AP600 Program, Phase 2".

INTERFACE – A functional or physical characteristic required to define a common boundary between two or more pieces of equipment, software or systems that are designed by different Westinghouse divisions, departments, or contractors/suppliers.

INTERFACE CONTROL DOCUMENT(ICD) - A formal document or drawing which defines the interface relationships between organizations with design responsibility for the AP600 program consistent with the program milestones (See Figure A).

The ICD applies to all physical, functional or operational interfaces of systems, equipment, software, facilities and installation requirements (Figure B) which are typically characterized by mechanical, electrical or functional data parameters or procedures with associated data requirements.

The ICD is designed to supplement not to duplicate information contained in the system specification document (SSD) by providing the details of the Interfaces.

LEAD ICD ENGINEER - The Lead ICD Engineer is the appointed Westinghouse AP600 representative responsible for a particular ICD and the interfacing that may be required with the other affected engineers for the issuance of the ICD. The Lead ICD Engineer can be the Responsible Design Engineer.

ICD ENGINEER - Official ICD interface person of the responsible group (other Westinghouse departments/divisions or contractors/suppliers) that has an interface with the specific AP600 equipment or software to which the ICD applies. This person is assigned by the responsible group organization to work with the Lead ICD Engineer in the development of the particular ICD.

SUPPLIER - As used in this procedure, a Supplier is any non-Westinghouse organization with design responsibility for systems, structures, equipment or software that interfaces with systems, structures, equipment or software designed/integrated by Westinghouse.

PROCEDURE

GENERAL

A The ICD is typically prepared by the responsible design organization.

B The ICD identifies the responsibilities of the responsible organizations at the design interfaces and ensures that design changes affecting interfaces are properly coordinated.

C An ICD Team is assembled by the appropriate AP600 Engineering manager for each ICD. As a minimum the ICD team is composed of an appointed Lead ICD Engineer and/or a Design Engineer and those engineers from other organizations including outside suppliers who are responsible for specific interfaces.

D Each appointed ICD Engineer shall enforce ICD control procedures within their organizations.

E The nature of the ICD varies considerably, depending on the interface being documented. It can be a physical or an operational interface. Interface definition takes the form of drawings, tables, figures, schematics, function lists, data format diagrams, and other data required by designers to complete their detail design and ensure that all the parts of the system work harmoniously (Figure B). The ICD could be a formal document or a formal drawing. In either case, the ICD shall identify the assignment of responsibilities among the participating design organizations for the review, approval, release, distribution, and revision of interface design information and the document(s) in which interface design information is defined. Additionally, each ICD should have a schedule identifying the major milestones that each organization must meet, together, for final ICD issuance.

F Appendices A, B, and C provide instruction(s) for a typical ICD.

G For those ICDs which are issued as documents, the Lead ICD engineer ensures that any ICD revision contains a Record of Changes page describing, in detail, significant changes along with a reason for the change in addition to any approvals required by AP-3.2. Approval for any revision(s) shall be obtained from the groups who originally reviewed and approved the interfaces. Revisions (changes) should be identified throughout the document by a bar line on the right hand margin or by "A" pages (e.g. change pages, looseleaf pages). The bar or vertical line appears once and is not cumulative in future revisions.

H For those ICDs which are issued as drawings, the Lead ICD engineer ensures that an Engineering Change Notice (ECN) describes the changes in detail along with a reason for the change in addition to any approvals required by AP-3.2. Approval for any revision(s) shall be obtained from the groups who originally reviewed and approved the interfaces. The changes or reference to the ECN should be identified in the revision column of the drawing.

I Each ICD shall be controlled in accordance with this procedure. Any proposed change to the ICD (document or drawing) shall be made in writing via the designated Lead ICD Engineer using the forms identified in AP-3.2,"Design Configuration Change Control for AP600 Program, Phase 2".

RESPONSIBILITY / ACTION

AP600 RESPONSIBLE
DESIGN MANAGER

1 Identifies the need for defining interfaces that exist between specific equipment, systems, processes or software and requests the preparation of the ICD.

2 Responsible for administering this procedure, defining and issuing standards to third parties (other Westinghouse organizations, contractors, or suppliers) for any ICD information that will be required to be provided by the third party.

3 Assigns a Lead ICD Engineer and identifies interfacing organizations (other cognizant groups, divisions or Suppliers) that will provide input to and approve ICD.

4 Establishes milestones and a schedule for the development and completion of the ICD.

5 Obtains commitment from interfacing organization(s) to assign ICD Engineer(s) and forms an ICD team.

6 Supervises the ICD Team in accordance with Figure A and acts as the arbitrator in case the ICD Team can not resolve technical issues.

7 Ensures that all ICD comments have been properly resolved with the mandatory review groups and that the ICD has been properly reviewed and signed-off.

8 Ensures that the ICD meets the program and contractual requirements. Reviews, approves and signs the ICD.

ICD TEAM

9 Responsible for identifying all relevant interfaces and for reviewing the ICD to ensure that a schedule and organizational responsibilities are defined; and that each technical discipline (mechanical, electrical, software, etc.) has been appropriately addressed. Once an ICD is issued, the ICD team will evaluate all proposed changes prior to revising the ICD (see Figure A).

The ICD Team shall meet, as needed, to resolve any technical concerns and reviews proposed ICD changes.

LEAD ICD ENGINEER

10 Identifies the ICD format e.g. a document, drawing or combination of both (See Procedure/General Section).

11 Obtains a document number in accordance with standard AP600 document numbering system (GW-GMP-005) for those ICDs that will be issued in a document format. Furthermore, the Document Cover sheets identified in the Forms/Exhibit section shall be utilized to formally sign ICDs.

12 Ensures that all drawings required by ICD are in accordance with standard Westinghouse AP600 drawing procedures and format as defined in "Preparation and Control of Drawings" (Reference WCAP-12601).

13 Prepares draft ICD and distributes to ICD Engineers. Coordinates management reviews, Configuration Control Board reviews, and verifies that all proposed changes are technically within the Baseline Design.

14 Resolves comments to the ICD generated during the review process.

15 Ensures that the "original" signed off ICD is properly filed in accordance with the applicable AP600 records flow schedule, document control and the Configuration Control Process.

16 Ensures that the ICD is maintained current as the design progresses.

17 Initiates or reviews any proposed revision(s) to the ICD, and ensures that the original ICD is revised in accordance with this procedure and that all revisions are placed under configuration control. (Figure A).

RESPONSIBLE DESIGN MANAGER

18 Defines the level of effort required from own organization to support and provide ICD input.

19 Provides input on schedule to support ICD.

20 Identifies the ICD Engineer within own organization.

21 Reviews and approves the ICD, as appropriate.

ICD ENGINEER

22 Provides input on format, content and schedule, as appropriate.

23 Coordinates review of draft ICD within own organization and provides comments to Lead ICD Engineer.

24 Upon resolution of all comments, signs ICD for own organization or obtains authorizing signature in accordance with organization's requirements.

25 Identifies any necessary changes to ICD to Lead ICD Engineer using the forms identified in Procedure AP-3.2, "Design Configuration Change Control for AP600 Program, Phase 2".

26 Responds to Lead ICD Engineer within 15 working days from the time of the original request on proposed changes to ICD.

REFERENCES

A GW-GMP-005, "AP600 Document Numbering Procedure"

B WCAP-12601, AP-3.2, "Design Configuration Change Control for AP600 Program, Phase 2"

C WCAP-9565, DP-3.2.6, "Preparation and Control of Drawings".

FORMS / EXHIBITS

Document Cover Sheet, Form 58202, Exhibit 10.

Standard Internal Review Sheet, Form 58203, Exhibit 17.

Record Of Changes, Form 58204, Exhibit 16.

APPENDICES

A. ICD Document Format

B. ICD Table Of Contents (Typical Document format)

C. Limited Rights Notice

FIGURE A

ICD INFORMATION CONFIGURATION CONTROL FLOW

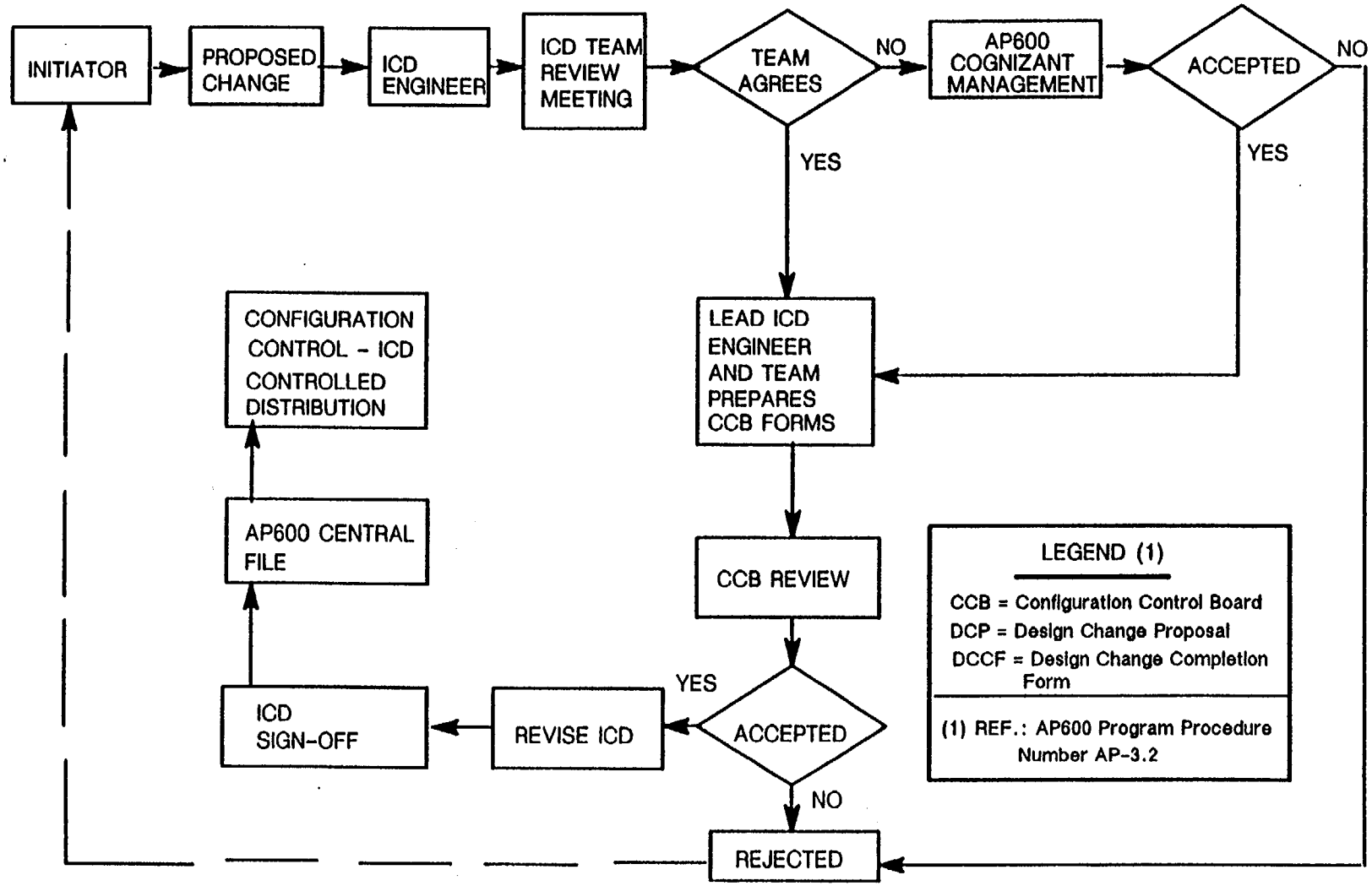

AP-3.7

Rev: 0

Form 58002A (386)

FIGURE B

EXAMPLE : DEFINING INTERFACE FUNCTIONS

The following figure depicts 4 pieces of equipment that are to be designed by different organizations:

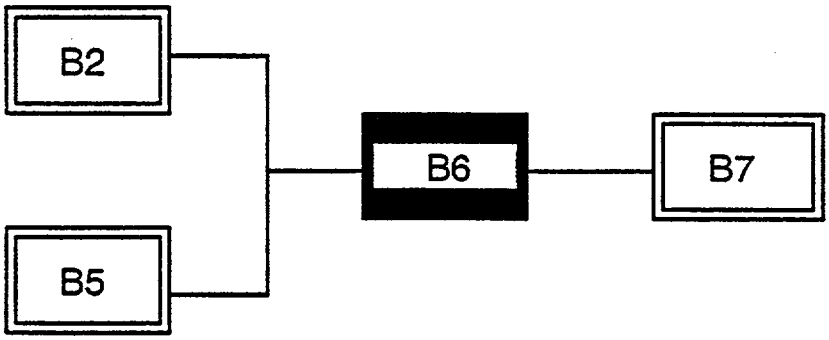

In an effort to identify the interfaces between all four pieces of equipment, a block digram is drawn and the following questions are asked which should be answered via an ICD:

- o If B6 'talks' to B2, B5 and B7, What does it say? What do they say?
- o If B6 requires something, what does it require? How much? When?
- o If B6 supplies something, what does it supply? How much? When?

The ICD should break down the functional diagram into a more detailed list of the various functions, requirements, flows in or out between B6, B2, B5 and B7.

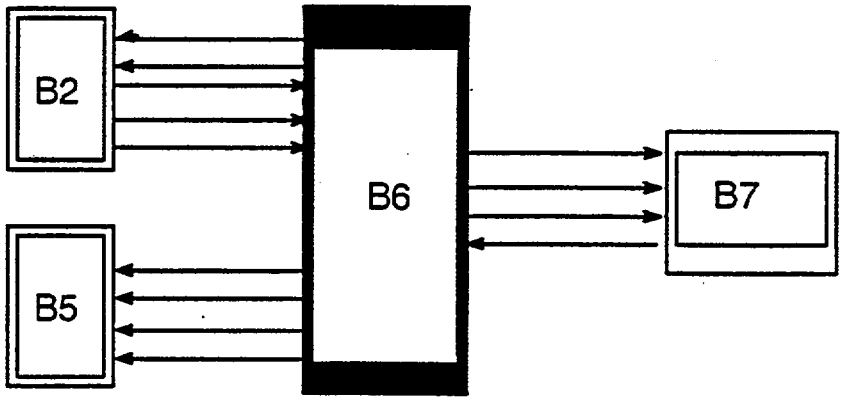

As a minimum, for the above diagram, the ICD will be the vehicle to:

- o Define the responsible organizations that are affected by the various interfaces
- o Assign values, dimensions, tolerances, times, durations, etc.
- o Select connector types and assign pins as above 'settles down'.
- o Define mounting, ducts, bolts, etc.
- o Depict energy balance for components.
- o Maintain load limits of components.

APPENDIX A

INTERFACE CONTROL DOCUMENT FORMAT

A.1 INTERFACE CONTROL DOCUMENT COVER SHEET

In accordance with exhibit 10.

NOTE

EACH ICD SHALL CONTAIN A WESTINGHOUSE INTERNAL REVIEW SHEET IN ACCORDANCE WITH EXHIBIT 17. THE INTERNAL REVIEW SHEET IS TO BE MAINTAINED INTERNAL TO THE AP600 PROGRAM.

A.2 RECORD OF CHANGES (REVISIONS)

In accordance with exhibit 16.

A.3 TABLE OF CONTENTS

Appendix B provides a guideline for the preparation of an Interface Control Document. This Table of Contents could be customized as needed for the specific application (See section 4.0).

In the event that the Limited Rights Statement needs to be identified in the document it shall be in accordance with appendix C.

APPENDIX B

INTERFACE CONTROL DOCUMENT - TABLE OF CONTENTS

APPENDIX B (Continued)

7.0 ENVIRONMENT INTERFACES

- o Thermal: Temperature Range, Heating Rates, Heat Transfer Surfaces.
- o Magnetic: Flux Density, Rate-of-Change
- o Radiation: Type, Flux Density, Total Dose
- o Ambient: Pressure, Temperature, Flow Rates
- o Air Conditioning: Temperature, Flow Rates

8.0 ELECTRICAL POWER INTERFACE

- o Electrical Power: Type, Voltage, Power Profile, Protection, Distribution, Connectors
- o Electromagnetic Compatibility System Isolation

9.0 I&C INTERFACES

- o Command Signals: Format, Rates, Identification
- o Data Signals: Radio Frequency Characteristics, Format Rate
- o Telemetry Signals: Format, Clock, Identification, Recording
- o Timing and Sequencing: Control and Logic, Relationships, Data
- o Transfers, Input Sensing
- o Interconnection Diagrams

10.0 SOFTWARE INTERFACES

- o Data: Inputs, Outputs, Rates
- o Messages: Format, Content, Storage
- o Protocols: Enable, Processing, Validation, Error Detection, Recovery
- o Software:
  - Diagrams, Standards and Conventions
  - Timing and Sequencing: Control & Logic Relationships, Data Transfers, Input Sensing

APPENDIX B (Continued)

11.0 INDUCED ENVIRONMENTS

- o Structural: Vibration, Shock, Acoustic, Loads, Dynamic Mode Shape
- o Thermal: Temperature Range, Heating Rates, Heat Transfer Surfaces
- o Magnetic: Flux Density, Rate-of-Change
- o Radiation: Type, Flux Density, Total Dose

12.0 OTHER INTERFACES

- o Safety
- o Materials Compatibility

13.0 ELECTRICAL WIRING INTERFACES

- o Physical Interfaces: Pin Assignments, Type of Connectors, Harness Management

14.0 VERIFICATION:

- o QA Requirements
- o ICD Requirements Verification Matrix
- o Models
- o Support Equipment Tests
- o Integration Tests

15.0 SCHEDULES

This section should contain the key milestones that are to be met by each affected party that are required to provide input to the ICD. Typically schedules are tracked by PCCA, however, their inclusion as part of the ICD provides all parties with specific target dates to have their design information available for other affected parties, thus ensuring that the integration process is accomplished in an effective, efficient and cost productive manner.

APPENDIX: Glossary of Terms

APPENDIX C

THE LIMITED RIGHTS STATEMENT IS TO BE INCLUDED IN ALL ICDS THAT ARE SIGNED OFF AND RELEASED FORMALLY OUTSIDE THE AP600 PROGRAM

LIMITED RIGHTS NOTICE

(A) These data are submitted with limited rights under Government Contract No. DE-AC03-90SF18495. These data may be reproduced and used by the Government with the express limitation that they will not, without written permission of the Contractor, be used for purposes of manufacture nor disclosed outside the Government; except that the Government may disclose these data outside the Government for the following purposes, if any, provided that the Government makes such disclosure subject to prohibition against further use and disclosure:

(I) This "proprietary data" may be disclosed for evaluation purposes under the restrictions above.

(II) This "proprietary data" may be disclosed to the Electric Power Research Institute (EPRI), electric utility representatives and their direct consultants, excluding direct commercial competitors, and the DOE National Laboratories under the prohibitions and restrictions above.

(B) This notice shall be marked on any reproduction of these data, in whole or in part.

Westinghouse Electric Corporation
Nuclear Projects Division

AP600

Program Operating Procedure

Subject:

AP600 ENGINEERING DATA BASE (EDB) ACCESS AND CONTROL

Approved:

H. J. Bruschi, General Manager
Nuclear Projects Division

Effective Date: 2-20-97

AUTHOR/COGNIZANT FUNCTION	Contact AP600 Plant Data Base Administrator on questions concerning this procedure.
PURPOSE	This procedure establishes the requirements and responsibilities for preparing and approving the movement of data into the AP600 Engineering Data Base.
SCOPE	This procedure applies to the updating, accessing, and controlling of data resident in the AP600 Engineering Data Base.
DEFINITIONS	Engineering Data Base The AP600 Engineering Data Base (EDB) is a repository of AP600 design data that is accessible to parties involved with the engineering design of the plant. As an engineering task is completed that results in the production of design data, the data is moved into the AP600 EDB so that other parties can utilize this up-to-date information in the completion of their own design tasks. Staging EDB The staging EDB is a data base for temporary storage of small quantities of data awaiting approval. After the data is approved, the Data Administrator moves the data from the Staging EDB to the AP600 EDB using the Control Program. Lot Control Program The Lot Control Program executes authorized transactions (loads, updates, etc.) from the Staging EDB and applies them to the AP600 EDB. The Lot Control Program performs the EDB updates, and produces an audit report. AP600 EDB Data Submittal Request Form The AP600 EDB Data Submittal Request Form identifies the data to be moved into the EDB and identifies the approval of the data for such release.

Lot Number

The lot number is a unique numerical key for each potential batch of transactions against the EDB. The lot number is how transactions are identified by the Data Administrator for moving data from the Staging EDB to the EDB. The lot number is required to track transactions against the AP600 EDB.

Data Administrator

The Data Administrator is the person responsible for controlling the updating of information in the EDB.

PROCEDURE

General

To achieve the goal of providing accurate data to the users and to maintain configuration control of the EDB, only approved data is placed into the EDB.

Data movement into the AP600 EDB is performed via the Staging EDB in a controlled and documented manner, and only after the data content is approved.

RESPONSIBILITY	ACTION
Engineer	1. Identify data to be updated (new or revised data) to the Data Administrator. The engineer may complete the top portion (above the dashed line) of an AP600 EDB Data Submittal Request and submit the form to the Data Administrator. Engineer must specify the location of (or deliver) the data and specify the format. If the data is part of an official AP600 project document, the document number and revision must be identified.
Data Administrator	2. Capture the data identified by the Engineer and import it into the Staging EDB, where the lot number is assigned.
Engineer	3. Approve the accuracy of the data to be entered into the EDB by signing the AP600 Engineering Data Base Data Submittal Request Form after reviewing the data content provided.
Data Administrator	4. Review the approved AP600 EDB Data Submittal Request and its accompanying material to verify proper approval. Invoke the Lot Control Program to update the AP600 EDB. This includes specifying the batch of transactions by the lot number. Verify that the proper data is added to the AP600 EDB by reviewing the confirming report.

File the AP600 EDB Data Submittal Request, the hardcopy equivalent of the data, and the confirming report produced by the Control Program in the paper file.

FORMS/EXHIBITS

AP600 EDB Data Submittal Form, Form 58209, Exhibit 26

REFERENCES

WCAP-12601, AP600 Program Operating Procedures

AP-3.2, Design Configuration Change Control for AP600 Program, Phase 2
AP-3.3, Document Release and Control for AP600 Program, Phase 2

Westinghouse Electric Corporation
Nuclear and Advanced Technology Division

AP600

Program Operating Procedure

Subject:

AP600 PLANT INSTRUMENTATION & CONTROL SYSTEMS

Approved: H. J. Bruschi, Director, AP600 Program

Effective Date: 10-31-91

AUTHOR/COGNIZANT FUNCTION	Contact Manager, Plant Instrumentation and Control Systems (PI&CS) on questions concerning this procedure.
PURPOSE	This procedure provides specific requirements, as well as guidelines, for work done by PI&CS personnel.
SCOPE	This procedure is applicable to the PI&CS group responsible for the scope under their cognizance for the AP600 Program. It contains both mandatory requirements (denoted by the verb shall) as well as non-mandatory guidelines (denoted by the verb should). The work performed by PI&CS for the AP600 project is categorized as Man-Machine Interface Systems design. This work includes the following: a) Man-Machine Interface Design of Control Rooms and Control Boards; b) Instrumentation and Control (I&C) Design; c) Control Room/Equipment Design. The general PI&CS activities are summarized in Appendix A, titled "PI&CS General Work Activities".
DEFINITIONS	I&C Architecture Diagram A diagram that depicts the I&C architecture. It is a system block diagram that represents the top level view of the system and its interconnections. Instrument Lists Lists that contain information about the plant process parameters. This information usually includes channel numbers, system, type, range, description, safety class, electrical train, alarms, set points, indicators, recorders, and preferred failure states.

Process Block Diagrams

Diagrams depicting the implementation of the I&C system functional requirements, functional diagrams, flow diagrams, channel lists and other key documents, in both hardware and software. All system protection and control functions are to be identified in Process Block Diagrams.

Specification Sheets

Sheets created in accordance with ISA-S20 (1981) for individual instruments, as necessary, and identified by the design engineer. Note that the Specification Sheets may differ in format and content from that identified in ISA-S20 so long as sufficient information is provided.

System Documentation

Documentation that comprehensively describes the design of the product. The system documentation includes design specifications that ensure that the end product will meet all of the established design criteria and functional requirements.

Systems Engineering

The engineering function that organizes and integrates concepts and technologies into total systems and ensures their technical integrity.

PROCEDURE

General

INTERFACE MANAGEMENT

PI&CS shall be responsible for coordinating and integrating AP600 I&C and Man-Machine Interfaces with groups that support the AP600 organizations. This includes systems provided by others through the appropriate Westinghouse interface organization.

DOCUMENTATION REVIEW PROCESS

Reviews of the PI&CS documentation shall be performed by internal personnel (within PI&CS) and/or external personnel (non-PI&CS). In either case, the personnel reviewing the documentation shall be approved by the PI&CS group manager. The review process shall include, as a minimum, the following elements:

a) Review of document for completeness, accuracy, and feasibility;
b) Issuance of a PI&CS letter to file documenting all comments with distribution to appropriate personnel for resolution;
c) Resolution of comments;

d) Obtaining management decision on unresolved comments;
e) Issuing a letter to file identifying the resolutions and results of the review and distributed to concerned parties.

SPECIFIC WORK PROCEDURE ELEMENTS

The following Specific Work Procedure Elements are defined in Figure 1 and are discussed below in more detail.

FIGURE 1
AP600 FLOW CHART FOR PI&CS ENGINEERING WORK

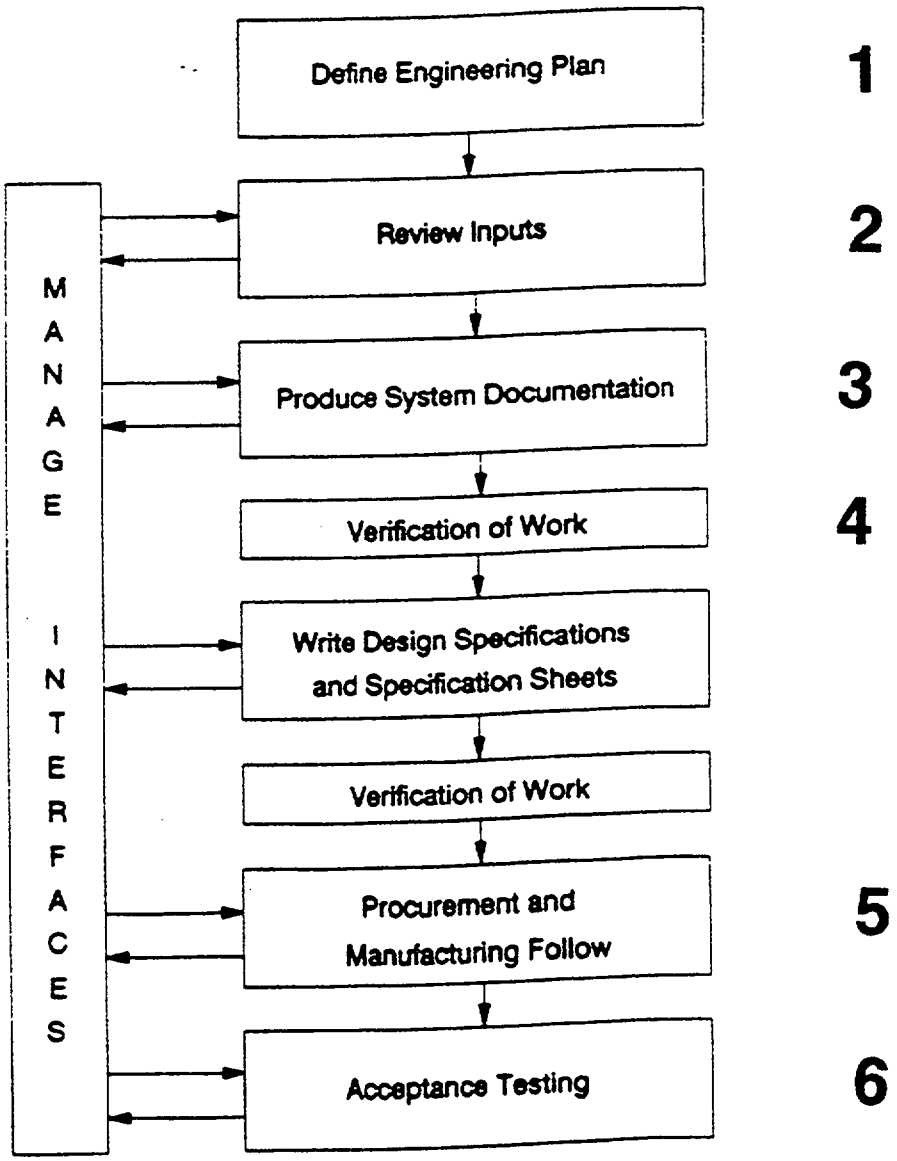

1. Definition of an Engineering Plan

An Engineering Plan that details the scope of the work should be established at the discretion of the AP600 PI&CS Manager. This plan is to be developed by the responsible engineer and approved by the AP600 PI&CS Manager. Several of the inputs listed under typical inputs of the Review Inputs section below will be necessary to perform these tasks. The Engineering Plan should take into account the following:

a) Work Objectives
b) Required Inputs
c) Commitments/Milestones
d) Required Outputs
e) Schedule
f) Funding/Resource Requirements
g) Supporting Organizations/Groups
h) Time-Phased Manpower Distribution

2. Review Inputs

Based on the required work to be done, the inputs shall be checked for completeness, accuracy, and feasibility. The inputs shall be reviewed in accordance with the documentation review process detailed in this procedure to assure that:

a) All necessary information has been supplied;
b) Requirements are accurate and complete;
c) Implementation is feasible.

The input information required to define an Engineering Plan and perform the engineering work should typically address the following items:

a) Goals of the system and desired outcomes of the work to be performed;
b) The date when the work is required to be completed;
c) Interfaces with other systems and the nature of those interfaces;
d) Requirements on system inputs and outputs;
e) Applicable government regulations and industry codes and standards;
f) Dimension and configuration envelope constraints such as size, orientation, location;
g) Environmental and power source envelopes or constraints;
h) Requirements related to access control, redundancy, independence, identification and test capability;

i) System classification and applicable quality assurance, reliability goals, verification and validation;
j) Environmental qualification requirements based on its classification.

The typical inputs include the following:

a) System Specification Documents, particularly the following portions: Interlock Sheets, Channel Lists, and Load Lists;
b) Protection Functional Requirements;
c) Control Functional Requirements;
d) Protection Functional Diagrams;
e) Control Functional Diagrams;
f) Engineering Flow Diagrams and P&IDs (Reference AP-3.15);
g) Customer (e.g. contract) Requirements;
h) Subcontractor Requirements;
i) Government Regulations and Industry Codes and Standards.

3. Produce System Documentation

The system documentation shall be produced as required and shall be reviewed and approved by a second engineer.

Figure 2, titled "I&C Design Process" shows the typical output documents produced by PI&CS, as well as the inputs that are required. The processes that produce the outputs given the inputs compose the PI&CS Transformation Matrix. These processes consist of dynamic tasks and differ for the various outputs produced.

Figure 3, titled "PI&CS Information Transformation Matrix" further relates the information that is required as inputs to produce the PI&CS outputs. The output documentation normally includes the following:

- I&C Architecture Diagram (see Appendix C)
- Process Block Diagrams (or equivalent) (see Appendix C)
- Equipment (Instrument) Lists
- Logic Diagrams (see Appendix C)
- Design Specifications
- I&C Databases
- Standard Safety Analysis Report Input

- System Specification Documents (SSDs)
  SSDs shall be prepared in accordance with procedure AP-3.1. However, when preparing PI&CS SSDs, the breakdown of each section defined by AP-3.1 shall be done in an equivalent sub-category format identified in Appendix B.

- Specification Sheets
  Created in accordance with ISA-S20 (1981 titled "Specification Forms for Process Measurement and Control Instruments, Primary Elements and Control Valves") for individual instruments, as necessary, and identified by the design engineer. Note that the Specification Sheets may differ in format and content from that identified in ISA-S20 so long as sufficient information is provided. The Specification Sheets shall be reviewed and approved by a PI&CS engineer. Typical equipment requiring Specification Sheets are field mounted instruments and control board instruments. Specification Sheets are not normally required for microprocessor based cabinet mounted equipment or for standardized systems.

4. Verification of Work

The designer shall identify and justify the appropriate type of verification to be used on his work and obtain written management approval. The choice of verification type will be documented and stored in the AP600 file. The types of verification are as follows:

a) Design Verification by Design Reviews in accordance with AP-3.5;
b) Design Verification by Independent Review/Alternate Calculations in accordance with WCAP-9565, DP-3.3.2;
c) Design Verification by Testing in accordance with WCAP-9565, DP-3.3.3;
d) Design Specifications in accordance with AP-3.8.

5. Procurement and Manufacturing Follow

The procedures defined in section DP-7.0, titled "Control of Purchased Items and Services" in WCAP-9565 shall be followed when performing this work. However, PI&CS shall be responsible for the following:

a) Providing the Purchase Requisition;
b) Evaluating the technical capabilities of suppliers;

c) Recommending acceptable suppliers;
d) Reviewing procurement documents;
e) Providing Purchase Requisition Change Notices;
f) Reviewing supplier documents and approving as required;
g) Evaluating and approving proposed deviations from specifications by the supplier.

6. Acceptance Testing from Manufacturer

PI&CS shall be responsible for providing the following:

a) Test requirements;
b) Review and approval of the test procedures;
c) Review and approval of the test results.

RESPONSIBILITY	ACTION
AP600 PI&CS Manager	Responsible for administering this procedure, defining and issuing standards to third parties (other Westinghouse organizations, contractors, suppliers) for any information that will be required to be provided by a third party. Ensures that all interfacing organizations are apprised of key design changes and identifies if Interface Control Documents need to be issued. Reviews and approves the Engineering Plan. Reviews, approves, signs-off the design documentation produced by the PI&CS group, ensures that it is verified, and that appropriate personnel within or external to PI&CS are appointed to review documentation in accordance with the Documentation Review Process of this procedure.
Design Engineer	Prepares an Engineering Plan Responsible for performing the responsibilities outlined in WCAP-9565, procedures DP-3.3.2 and DP-3.3.3. Ensures that the Design Specifications are prepared in accordance with AP-3.8. Ensures that the System Specification Documents are prepared in accordance with the format outlined in AP-3.1 and develop a sub-category of each section equivalent to the sample identified in Appendix B.

Ensures that any Interface Control Documents are prepared in accordance with AP-3.7.

Ensures that all final signed off documentation is maintained in the appropriate engineering files and that a copy is sent to the AP600 Central File.

REFERENCES

A. WCAP-12601, AP600 Program Operating Procedures

AP-3.1, System Specification Document
AP-3.5, Design Reviews
AP-3.7, Interface Control Document
AP-3.8, Design Specifications
AP-3.15, System P&ID Preparation

B. WCAP-9565, NATD Quality Assurance Program Plan

DP-3.3.2, Design Verification by Independent Review or Alternate Calculations
DP-3.3.3, Design Verification by Testing

C. ISA-S20 (1981), Specification Forms for Process Measurement and Control Instruments, Primary Elements and Control Valves

FORMS/EXHIBITS

None

APPENDICES

A. PI&CS General Work Activities
B. SSD Section Breakdown
C. Typical Diagrams (Architecture, Process and Logic)

FIGURE 2
INSTRUMENTATION AND CONTROL DESIGN PROCESS

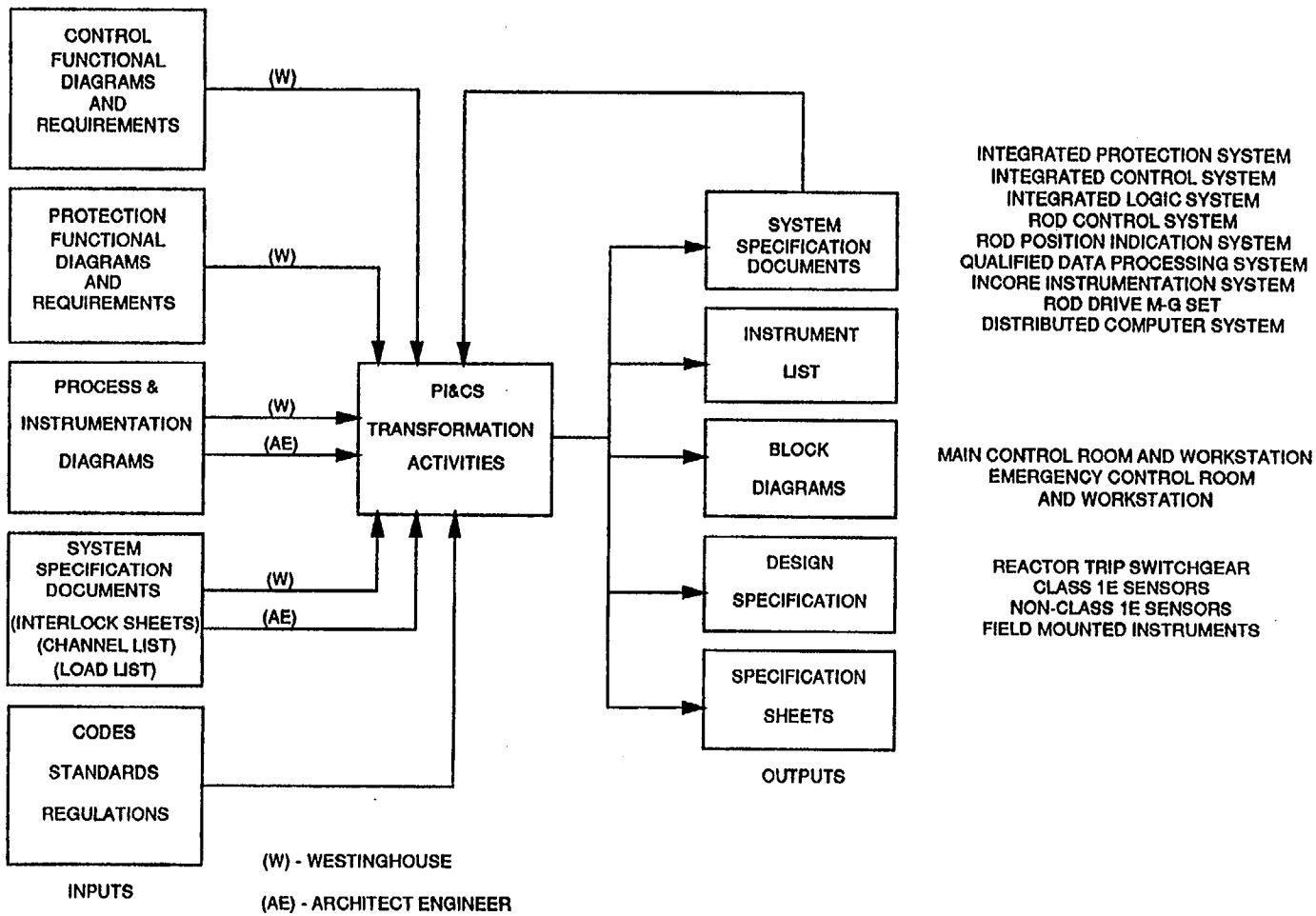

FIGURE 3
PLANT INSTRUMENTATION AND CONTROL SYSTEM
INFORMATION TRANSFORMATION MATRIX

PI&CS Information Transformation Matrix

INPUT DOCUMENTS	OUTPUT DOCUMENTS					
	BLOCK DIAG	LOGIC DIAG	INST LIST	SSD	DESIGN SPEC	SPEC SHEETS
FUNCTIONAL DIAGRAMS	X		X	X		
FUNCTIONAL REQUIREMENTS	X		X	X	X	X
(W) ENGINEERING FLOW DIAGRAMS	X		X	X		X
(B) ENGINEERING FLOW DIAGRAMS	X		X	X		X
(W) CHANNEL LIST	X		X			X
(B) CHANNEL LIST	X		X			X
(W) INTERLOCK SHEETS	X	X				
(B) INTERLOCK SHEETS		X				
(W) LOAD LIST		X				
(B) LOAD LIST		X				
ELECTRICAL REQUIREMENTS	X	X		X	X	
EPRI REQUIREMENTS	X	X		X	X	X
CODES & STANDARDS	X			X	X	
I&C SYSTEM SPECIFICATION DOCUMENTS	X	X		X	X	X
OTHER SYSTEM SPECIFICATION DOCUMENTS	X	X	X	X	X	X
STANDARD COMPONENT SPECIFICATIONS	X	X	X	X	X	X
INTERFACE DETAILS	X	X	X	X	X	X
SPECIFICATIONS FOR COMPONENTS	X	X	X	X	X	X
DESIGN CRITERIA	X	X	X	X	X	X

APPENDIX A

PI&CS GENERAL WORK ACTIVITIES

This appendix is included as a training aid for employees new to PI&CS.

The general PI&CS activities are depicted in Figure 1, titled "AP600 Flow Chart For PI&CS Engineering Work" and are detailed in this procedure.

The work can encompass the total Systems Engineering function or any portion thereof. Figure 2, titled "I&C Design Process" shows the typical inputs and outputs that are used and/or generated by PI&CS.

Figure 3, titled "PI&CS Transformation Matrix" shows the relationships between the inputs required and outputs generated by PI&CS.

The functions of PI&CS include the following:

- Development of the I&C design criteria and requirements reflecting the requesting group's needs and in compliance with the applicable government regulations and industry requirements;
- Providing operating hardware or rendering engineering services in an effective and efficient manner;
- Comparing the final product(s) to input requirements to demonstrate conformance.

APPENDIX B

PI&CS SYSTEM SPECIFICATION DOCUMENT

TABLE OF CONTENTS

TABLE OF CONTENTS

TABLE OF CONTENTS

APPENDIX C

TYPICAL ARCHITECTURE DIAGRAM

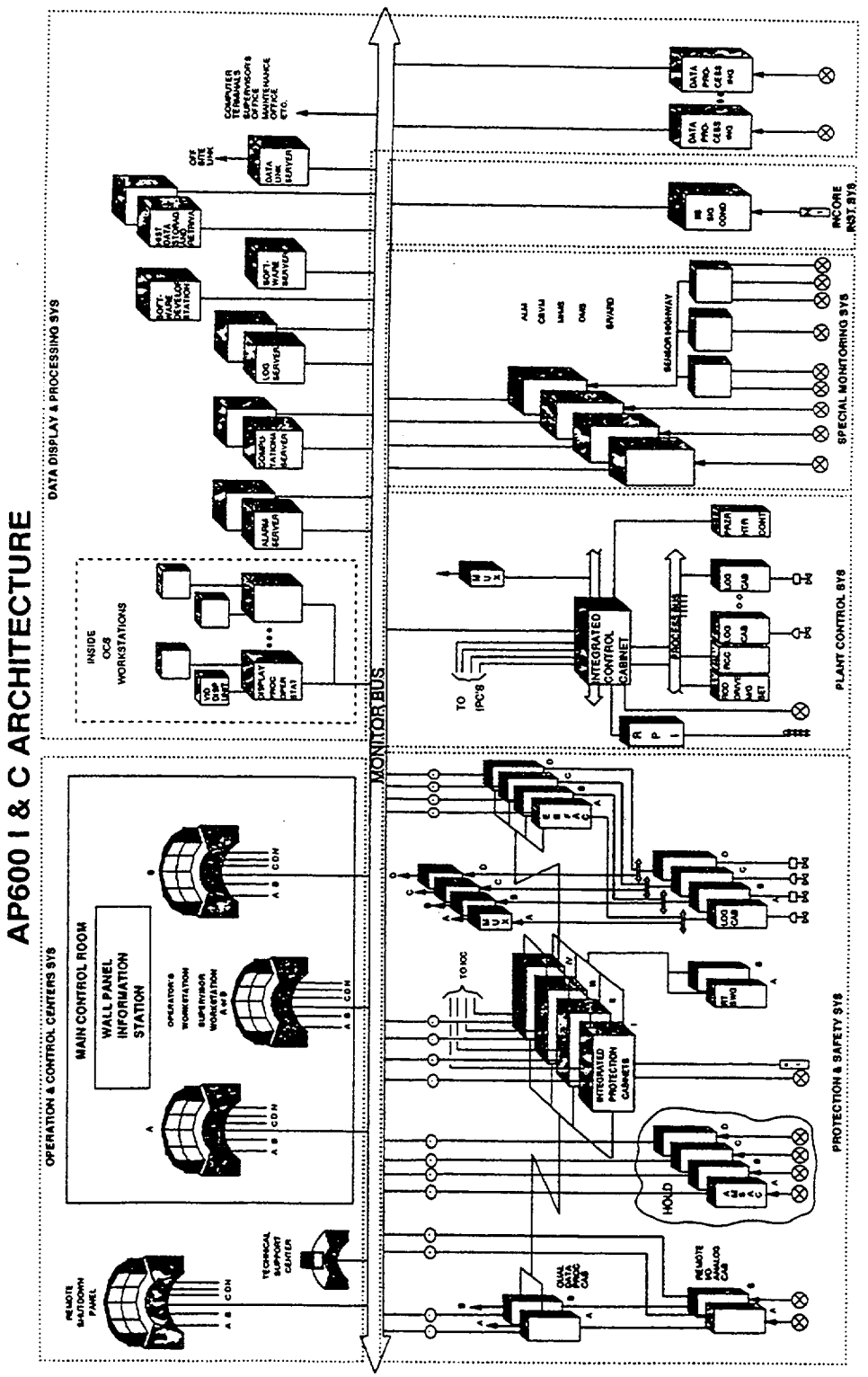

APPENDIX C

TYPICAL PROCESS BLOCK DIAGRAM

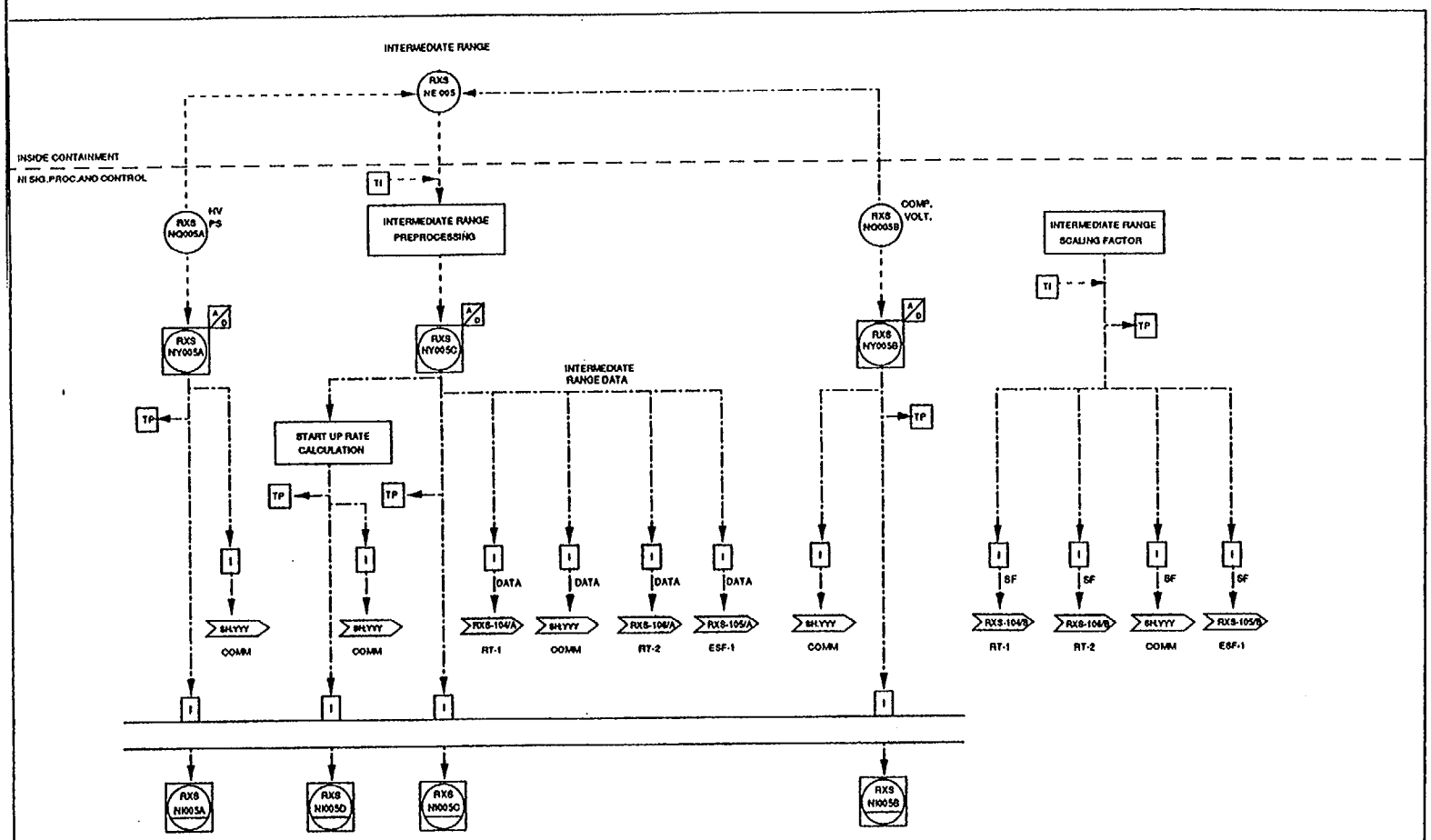

NOTE:
Channel Number is not official

WESTINGHOUSE ELECTRIC CORPORATION
WATER REACTOR DIVISIONS - MONROEVILLE, PA, USA

AP600 - DOE ADVANCED LWR

PROCESS BLOCK DIAGRAM
DRAWING NO: RXS-J3J-103 REV: A
FILE: RXS-103.DRW

AP-3.14

0

APPENDIX C

TYPICAL PROCESS BLOCK DIAGRAM

BASIC FIELD SENSOR SYMBOL

MAIN CONTROL ROOM INSTRUMENT OR INDICATOR

HV PS — HIGH VOLTAGE POWER SUPPLY FOR NUCLEAR INSTRUMENTATION

LV PS — LOW VOLTAGE POWER SUPPLY FOR NUCLEAR INSTRUMENTATION

COMP. VOLT. — COMPENSATING VOLTAGE POWER SUPPLY FOR NUCLEAR INSTRUMENTATION

PRE AMP. — PRE-AMPLIFIER FOR VARIOUS INSTRUMENTATION

OFF-PAGE CONNECTOR

ANALOG TRANSMISSION

DIGITAL TRANSMISSION

MULTIPLEXED SIGNALS

SIGN. COND. — SIGNAL CONDITIONER FOR NUCLEAR INSTRUMENTATION

SIGNAL CONDITIONING FUNCTION WHICH CONVERTS AN ELECTRICAL SIGNAL TO A 4-20 mA SIGNAL

SIGNAL CONDITIONING FUNCTION WHICH CONVERTS A 4-20 mA SIGNAL TO A VOLTAGE SIGNAL. INCLUDES SURGE FILTERING A POWER SUPPLY IS ALSO PROVIDED

SIGNAL CONDITIONING FUNCTION WHICH CONVERT A RESISTANCE TO A VOLTAGE SIGNAL. INCLUDES SURGE FILTERING. A POWER SUPPLY IS ALSO PROVIDED

INSTRUMENTATION FUNCTION IMPLEMENTED IN A SHARED FASHION (IE. IN SOFTWARE) NOT NORMALLY ACCESSIBLE TO THE PLANT OPERATOR

INSTRUMENTATION FUNCTION IMPLEMENTED IN A SHARED FASHION AND ACCESSIBLE TO THE PLANT OPERATOR IN THE MAIN CONTROL ROOM (IE. INDICATIONS AND ALARMS)

INSTRUMENTATION FUNCTION IMPLEMENTED IN A SHARED FASHION AND ACCESSIBLE TO THE PLANT OPERATOR AT AN AUXILIARY LOCATION

BASIC SYMBOL FOR A SWITCH FUNCTION

BASIC SYMBOL FOR A SWITCH THAT PERFORMS TWO FUNCTIONS (IE. BLOCK AND RESET)

SWITCH UNIT WITH TWO LIGHTS USED FOR ACTUATE/NORMAL/BLOCK FUNCTION

COMPUTER ANALOG INPUT AND ANALOG TO DIGITAL CONVERSION FUNCTION. ALSO INCLUDES DIGITAL FILTERING AND SQUARE ROOT FUNCTION

COMPUTER ANALOG INPUT AND ANALOG TO DIGITAL CONVERSION FUNCTION. ALSO INCLUDES DIGITAL FILTERING AND LINEARIZATION FUNCTION

COMPUTER ANALOG INPUT AND ANALOG TO DIGITAL CONVERSION FUNCTION. ALSO INCLUDES DIGITAL FILTERING AND [TO BE DETERMINED] FUNCTION

COMPUTER ANALOG INPUT AND ANALOG TO DIGITAL CONVERSION FUNCTION. ALSO INCLUDES DIGITAL FILTERING AND LINEARIZATION FUNCTION WITH OUTPUT FILTERING

FILTER

COMPUTER PULSE INPUT AND PULSE TO DIGITAL CONVERSION FUNCTION ALSO INCLUDES DIGITAL FILTERING AND [TO BE DETERMINED] FUNCTION

COMPUTER ANALOG OUTPUT AND DIGITAL TO ANALOG CONVERSION FUNCTION

WESTINGHOUSE ELECTRIC CORPORATION
WATER REACTOR DIVISIONS • MONROEVILLE, PA, USA

AP600 - DOE ADVANCED LWR

PROCESS BLOCK DIAGRAM SYMBOLS

DRAWING NO: [LATER] REV: A
FILE: LEGEND1.DRW

APPENDIX C

TYPICAL PROCESS BLOCK DIAGRAM

LEAD/LAG FUNCTION

RATE/LAG FUNCTION

SUMMATION FUNCTION
THE OUTPUT IS THE ALGEBRAIC SUMMATION OF THE INPUTS

AU
AUCTIONEERING FUNCTION
THE OUTPUT IS THE ALGEBRAIC LOWEST (OR HIGHEST) OF THE INPUTS

HI
BISTABLE FUNCTION - HIGH
THE OUTPUT IS A LOGICAL TRUE WHEN THE INPUT IS ABOVE THE BISTABLE'S SETPOINT

LO
BISTABLE FUNCTION - LOW
THE OUTPUT IS A LOGICAL TRUE WHEN THE INPUT IS BELOW THE BISTABLE'S SETPOINT

PULSE COUNTER FUNCTION

FUNCTION (TO BE DETERMINED)

SPECIAL CALCULATION FUNCTION
PURPOSE DEFINED BY TITLE IN BOX
MULTIPLE INPUTS AND OUTPUTS PERMITTED

TI
TEST INJECTION POINT FOR AUTO TESTER

TP
TEST MONITORING POINT FOR AUTO TESTER

TI
SIGNAL INPUT WITH SWITCHED TEST INJECTION POINT FOR AUTO TESTER

I
ISOLATION FUNCTION
OUTPUT IS ELECTRICALLY ISOLATED FROM THE INPUT.

NOT FUNCTION - OUTPUT IS TRUE WHEN INPUT IS FALSE
(NOTE 1)

OR FUNCTION - OUTPUT IS TRUE WHEN ONE OR MORE INPUTS ARE TRUE
(NOTE 1)

AND FUNCTION - OUTPUT IS TRUE ONLY WHEN EVERY INPUT IS TRUE
(NOTE 1)

2/4
COINCIDENCE FUNCTION - OUTPUT IS TRUE WHEN "X" OUT OF "Y" INPUTS ARE TRUE
(NOTE 1)

2/4 BYP
COINCIDENCE FUNCTION WITH BYPASS
THE COINCIDENCE VOTING IS MODIFIED BY BYPASS INPUTS
(NOTE 1)

S R
RETENTIVE MEMORY
THE OUTPUT RETAINS THE LAST MEMORY STATE UPON RESET

R S
OFF RETURN MEMORY
THE OUTPUT RETURNS TO FASLE UPON RESET

A B
ACTUATION BLOCK
THE OUTPUT IS TRUE WHEN THE INPUT (A) IS TRUE EXCEPT WHEN A BLOCK SIGNAL (B) FORCES THE OUTPUT TO FALSE
THE BLOCK SIGNAL MAY BE MOMENTARY

TO
COMPUTER DIGITAL TRIP OUTPUT FUNCTION WITH READBACK. IF TRIP IS OUTPUT AND READBACK DOES NOT AGREE, DEADMAN IS NOT UPDATED. LOSS OF DEADMAN CAUSES FUNCTION TO ASSUME TRIP STATE

ABO
ACTUATE/BYPASS/OUTPUT FUNCTION
THE OUTPUT CAN BE MANUALLY FORCED TRUE (ACTUATE) OR PREVENTED FROM BECOMING TRUE (BYPASS) FROM A SWITCH ON THE BYPASS PANEL

NOTE 1: THESE FUNCTIONS CAN BE IMPLEMENTED AS EITHER SHARED (WITH THE SURROUNDING BOX) OR INDIVIDUALLY (WITHOUT SURROUNDING BOX)

WESTINGHOUSE ELECTRIC CORPORATION
WATER REACTOR DIVISIONS - MONROEVILLE, PA, USA

AP600 - DOE ADVANCED LWR

PROCESS BLOCK DIAGRAM SYMBOLS

DRAWING NO: (LATER) REV: A

FILE: LEGEND2.DRW

APPENDIX C

TYPICAL LOGIC DIAGRAM

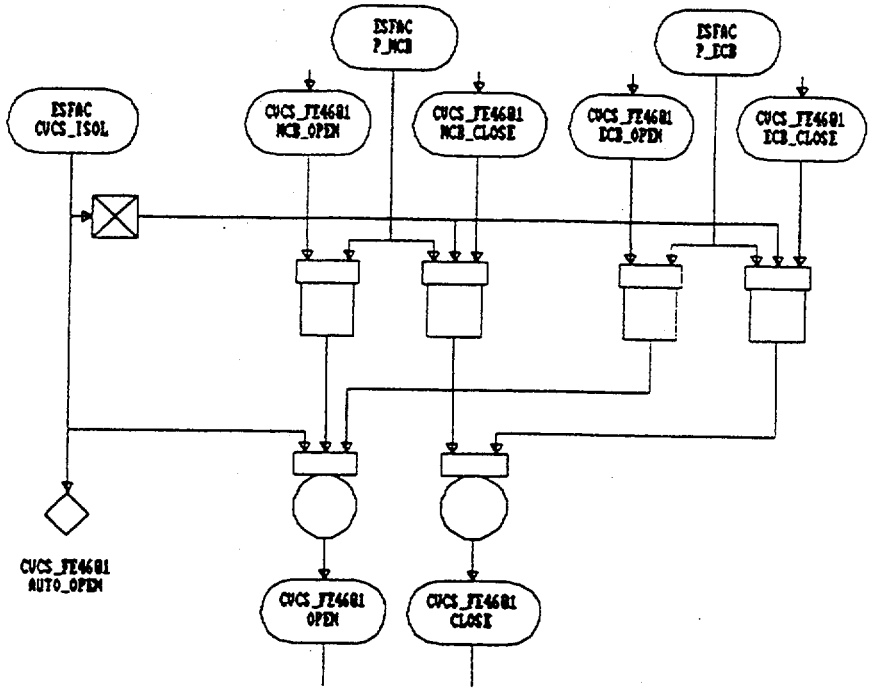

References:

1. ESF_EPO_TEST- EPO ESFAC System Test Request Sh: 31
2. MCB_006 - MOV OPEN/CLOSE LOGIC Sh: 38
3. MOV_001 - MOV EPO INTERFACE LOGIC Sh: 39
4. MCB_LAMP_002- MOV Status Indication Lamps Sh: 40
5. MOV_002 - MOV VALVE STATUS LOGIC Sh: 41
6. ECB_001 - ECB OPEN/CLOSE LOGIC Sh: 43
7. STATE_RST01 - RESET PROCESSOR STATE LOGIC Sh: 51
8. STATE_RST02 - RESET PROCESSOR STATE LOGIC Sh: 52

WESTINGHOUSE LOGICALC III

APPLICATION LOGIC DIAGRAM
CVCS_FE4601
EXCESS LETDN TO PRT ISOL VLV #1
Train: C Cabinet: 100 Zone: 19
Jerzy Gutman Rev. 0XA 12/13/88

DWG-1000 | SHEET:440

Westinghouse Electric Company
Nuclear Plant Projects

AP1000

Program Operating Procedure

Subject:

CONTROL OF SUBCONTRACTOR SUBMITTALS

Approved: W. E. Cummins, General Manager
New Plant Projects Division

Effective Date: 3-1-02

AUTHOR/RESPONSIBLE FUNCTION

Contact Manager, Passive Plant Projects, on questions concerning this procedure.

PURPOSE

To establish the methodology for receipt, distribution, control, and review of subcontractor design document submittals.

SCOPE

This procedure applies to all design documents submitted by subcontractors related to the AP1000 program. Those documents are as specified in each subcontract and generally include, but are not limited to:

- Applicable general specifications used in design
- System Specification Documents
- Design drawing documents
- Design Specifications
- Design Analysis/Calculation Documents
- Design change documents
- Design and analysis report documents

DEFINITIONS

Document - Any written or pictorial information describing, defining, specifying, reporting, or certifying activities, requirements, procedures, or results.

Procedure - A document that specifies or describes how an activity is to be performed.

Subcontractor - Any individual or organization who furnishes items or services in accordance with a procurement document, including technical cooperation agreements. An all inclusive term used in place of any of the following: vendor, supplier, seller, contractor, fabricator, consultant design agent, technical cooperation agreement participant and their subtier level.

Document Submittal Form (DSF) - A form used by a subcontractor to submit a document.

PROCEDURE

General	A.	This procedure specifies the activities for processing the receipt from AP1000 subcontractors of Document Submittal Forms (DSF) and submitted documents.
	B.	This procedure supersedes the requirements of WEC 6.1 for the processing of supplier submittals for the AP1000 program.

RESPONSIBILITY/ACTION

Subcontractor	1.	Prepare the Document Submittal Form (DSF) in accordance with the instructions and submit the documents to the AP1000 person identified in the subcontract. See AP-6.2 for additional instructions for technical document release.
Addressee	2.	Forward copy of DSF and document(s) to the following: • Responsible manager and responsible engineer • Other involved individuals
	3.	Forward original of DSF and document(s) to AP1000 Central File.
AP1000 Central File	4.	a. File DSF by letter number b. Enter document into EDMS c. Update list of issued documents
Responsible Manager/ Engineer	5.	If the submitted document is a Design Change Proposal (DCP), proceed in accordance with AP-3.2.
	6.	If review of submitted document is desired, request such review.
Reviewers	7.	Review documents as appropriate and return any comments to the Responsible Manager/Engineer.
Responsible Manager/ Engineer	8.	Return comments to subcontractor.
Subcontractor	9.	Act on comments prior to next document revision.

REFERENCES

A. AP1000, Program Operating Procedure AP-3.2 Change Control for the AP600 Program.

B. AP1000 Program Operating Procedure AP-6.2, Technical Document Release and Control.

C. WEC 6.1, Control of Purchased Items and Services.

FORMS/EXHIBITS

Document Submittal Form, See AP-6.2.