72-1004

TRANSNUCLEAR, INC.

March 29, 2002
NUH03-02-30

Ms. Mary Jane Ross-Lee
Spent Fuel Project Office, NMSS
U. S. Nuclear Regulatory Commission
11555 Rockville Pike M/S 0-6-F-18
Rockville, MD 20852

Subject: Application for Amendment No.7 of NUHOMS® Certificate of Compliance No. 1004 for Dry Spent Fuel Storage Casks, Revision 0

References:

1. Certificate of Compliance (CoC) No. 1004 Revision 4 and Proposed Amendments 5 and 6 to the CoC.
2. Office of the Nuclear Materials Safety and Safeguards, "Safety Evaluation Report (SER), Addition of the NUHOMS®-61BT Dry Shielded Canister (DSC) and Additional Fuel Types," September 17, 2001 (Docket 72-1004).
3. Public Meeting with the Nuclear Regulatory Commission to Discuss Storage of Damaged Fuel in the NUHOMS®-61BT DSC, November 15, 2001.
4. Interim Staff Guidance (ISG)-1, "Damaged Fuel", November 2, 1998.

Dear Ms. Ross-Lee:

Transnuclear, Inc. (TN) herewith submits its Application for Amendment No. 7 of NUHOMS® Certificate of Compliance No. 1004. This application proposes to add damaged BWR spent fuel assemblies and additional fuel types to the authorized contents of the 61BT DSC previously approved per Reference 2.

The NUHOMS®-61BT DSC is designed to store 61 intact or a combination of up to 16 damaged and the remainder intact BWR fuel assemblies. As noted in section 8.1.1 of the SER (Reference 2), the structural analyses for the damaged BWR fuel did not include the effects of the stresses on the fuel cladding that would be associated with normal and off-normal storage conditions. Accordingly, damaged fuel was not authorized for storage in the NUHOMS® -61BT system. Notwithstanding, all other aspects of the supporting analyses, including criticality and shielding analyses for the damaged fuel were reviewed by the staff and determined acceptable in the SER.

This application provides the supporting structural analyses for the damaged BWR fuel cladding to demonstrate compliance with the handling and retrievability standards set forth in ISG-1 (Reference 4). The methodology used herein is consistent with the approach outlined in an NRC

39300 CIVIC CENTER DRIVE, SUITE 280, FREMONT, CA 94538
Phone: 510 795-9800 • Fax: 510 744-6002

NMSS01
PROP

meeting on November 15 2001 (Reference 3). In addition, supporting analyses for the additional fuel types is provided.

This submittal is organized in the following format to facilitate your staff's review:

Attachment A: Description, Justification and Evaluation of Amendment Changes,
Attachment B: Suggested Changes to Certificate of Compliance (Relative to Reference 1),
Attachment C: FSAR Appendix K Changes.

This submittal includes proprietary information (drawing included with Section K.1 of Attachment C) which may not be used for any purpose other to support your staff's review of the application. In accordance with 10 CFR 2.790, I am providing an affidavit copy (Enclosure 1) specifically requesting that you withhold this proprietary information from public disclosure. The original version of this affidavit is being sent from our Hawthorne office under a separate cover.

Amergen Corporation plans to initiate loading "damaged" fuel and the additional fuel types at its Oyster Creek Nuclear Station in January 2004. Consistent with Amergen's needs, a proposed milestone schedule for the review and approval of this amendment application was presented (Reference 3). TN respectfully requests that the staff assign appropriate priority for review of this application, consistent with the considerations delineated above and a June 2003 effective date for the amended CoC.

Should you or your staff require additional information to support review of this application, please do not hesitate to contact me at 510-744-6053.

Sincerely,

UB Chopra

U. B. Chopra
Licensing Manager

Docket 72-1004

Enclosures:
1. Affidavit for withholding proprietary information.
2. Ten (10) copies of the Application for Amendment No. 7 to COC 1004 (Proprietary Version).
3. Three (3) copies of the Application for Amendment No. 7 to COC 1004 (Non-Proprietary Version).

ATTACHMENT A

Description, Justification, and Evaluation of Amendment 7 Changes

ATTACHMENT A

DESCRIPTION, JUSTIFICATION AND EVALUATION OF AMENDMENT CHANGES

1.0 INTRODUCTION

The purpose of this amendment application is to add damaged BWR spent fuel assemblies and additional fuel types to the authorized contents of the 61BT DSC previously approved per CoC 1004 Amendment No. 3.

The NUHOMS®-61BT DSC is designed to store 61 intact or a combination of up to 16 damaged and the remainder intact BWR fuel assemblies. As noted in section 8.1.1 of the SER, the structural analyses for the damaged BWR fuel did not include the effects of the stresses on the fuel cladding that would be associated with normal and off-normal storage conditions. Accordingly, damaged fuel was not authorized for storage in the NUHOMS® -61BT system. Notwithstanding, all other aspects of the supporting analyses, including criticality and shielding analyses for the damaged fuel were reviewed by the staff and determined acceptable in the SER.

This application provides the supporting structural analyses for the damaged BWR fuel cladding to demonstrate compliance with the handling and retrievability standards set forth in ISG-1. The methodology used herein is consistent with the approach outlined in an NRC meeting on November 15 2001. In addition, supporting analyses for the additional fuel types is provided.

This section of the application provides (1) a brief description of the changes, (2) justification for the change, and (3) a safety evaluation for this change.

2.0 BRIEF DESCRIPTION OF THE CHANGE

2.1 Significant Changes Relative to NUHOMS® CoC 72-1004, Amendment 4 and proposed Amendments 5 and 6

The changes listed below are relative to CoC Amendment 4 including changes proposed by CoC Amendments 5 and 6:

- Revise "Limit/Specification" and "Action" sections of Specification 1.2.1, "Fuel Specification", to add reference to Table 1-1j which specifies the applicable parameters for the damaged BWR fuel allowed to be stored in the NUHOMS®-61BT DSC.

- Revise the "Bases" section of Specification 1.2.1, "Fuel Specification", to provide the supporting bases for the damaged BWR fuel and additional fuel types allowed to be stored in the NUHOMS®-61BT DSC.

- Revise Table 1-1c to add additional fuel types to be stored in the NUHOMS®-61BT DSC.

- Revise Table 1-1d to address the damaged BWR fuel and additional fuel types being added to the NUHOMS®-61BT DSC.

- Add a new Fuel Specification Table 1-1j for the damaged BWR fuel to be stored in the NUHOMS®-61BT DSC.

- Add a new Fuel Qualification Tables 1-2g for the intact and damaged BWR Fuel to be stored in the NUHOMS®-61BT DSC.

2.2 Changes to NUHOMS® FSAR, Revision 6

Attachment C of this submittal includes revised and new pages for FSAR Appendix K. These updated Appendix K pages (Revision 6 and updated pages included in Attachment C) are prepared in a format consistent with the Standard Review Plan for Dry Cask Storage (NUREG 1536). The updated Appendix K provides a complete evaluation of the NUHOMS®-61BT System for the damaged BWR fuel and additional fuel types.

3.0 JUSTIFICATION OF CHANGE

Amergen Corporation plans to initiate loading "damaged" fuel and the additional fuel types at its Oyster Creek Nuclear Station in January 2004. Consistent with Amergen's needs, a proposed milestone schedule for the review and approval of this amendment application was presented. TN respectfully requests that the staff assign appropriate priority for review of this application, consistent with the considerations delineated above and a June 2003 effective date for the amended CoC.

4.0 EVALUATION OF CHANGE

TN has evaluated the NUHOMS®-61BT system for structural, thermal, shielding and criticality adequacy and has concluded that the storage of the damaged BWR fuel and additional fuel types in the NUHOMS®-61BT System has no significant effect on safety. This evaluation is documented in the updated Appendix K of the FSAR.

ATTACHMENT B

Suggested Changes to Technical Specifications of CoC 1004 Amendment No. 4

(Changes proposed by CoC Amendments 5 and 6 have been included as current configuration.)

Technical Specifications Included:

- Section 1.2.1 (Changed Pages Only)

1.2.1 Fuel Specifications

Limit/Specification: The characteristics of the spent fuel which is allowed to be stored in the standardized NUHOMS® system are limited by those included in Tables 1-1a, 1-1b, 1-1c, 1-1d, 1-1e, 1-1f, 1-1g, 1-1h, *and 1-1j*.

Applicability: The specification is applicable to all fuel to be stored in the standardized NUHOMS® system.

Objective: The specification is prepared to ensure that the peak fuel rod cladding temperatures, maximum surface doses, and nuclear criticality effective neutron multiplication factor are below the design limits. Furthermore, the fuel weight and type ensures that structural conditions in the FSAR bound those of the actual fuel being stored.

Action: Each spent fuel assembly to be loaded into a DSC shall have the parameters listed in Tables 1-1a, 1-1b, 1-1c, 1-1d, 1-1e, 1-1f, 1-1g, 1-1h, *and 1-1j* verified and documented. Fuel not meeting this specification shall not be stored in the standardized NUHOMS® system.

Surveillance: Immediately, before insertion of a spent fuel assembly into a DSC, the identity of each fuel assembly shall be independently verified and documented.

Bases: The specification is based on consideration of the design basis parameters included in the FSAR and limitations imposed as a result of the staff review. Such parameters stem from the type of fuel analyzed, structural limitations, criteria for criticality safety, criteria for heat removal, and criteria for radiological protection. The standardized NUHOMS® system is designed for dry, horizontal storage of irradiated light water reactor (LWR) fuel. The principal design parameters of the fuel to be stored can accommodate standard PWR fuel designs manufactured by Babcock and Wilcox (B&W), Combustion Engineering (CE), and Westinghouse (WE), and standard BWR fuel manufactured by General Electric (GE) *and Exxon/ANF*. The NUHOMS®-24P and 52B systems are limited for use to these standard designs and to equivalent designs by other manufacturers as listed in Chapter 3 of the FSAR. The analyses presented in the FSAR are based on non-consolidated, zircaloy-clad fuel with no known or suspected gross breaches.

The NUHOMS®-61BT, 32PT, and 24PHB systems are limited for use to these standard designs and to equivalent designs by other manufacturers as listed in Tables 1-1d, 1-1f, 1-1h, *and 1-1j*. The analyses presented in Appendix K, M, and N of the FSAR are based on non-consolidated, zircaloy-clad fuel.

The physical parameters that define the mechanical and structural design of the HSM and DSC are the fuel assembly dimensions and weight. The calculated stresses given in the FSAR are based on the physical parameters

given in Tables 1-1a, 1-1b, 1-1c, 1-1d, 1-1e, 1-1f, ,1-1g, 1-1h, *and 1-1j* and represent the upper bound.

The design basis fuel assemblies for nuclear criticality safety are Babcock and Wilcox 15x15 fuel assemblies for the NUHOMS®-24P and 24PHB, General Electric 7x7 fuel assemblies for the NUHOMS®-52B and General Electric 10x10 fuel assemblies for the NUHOMS®-61BT designs. The nuclear criticality safety for the NUHOMS®-32PT DSC is based on an evaluation of individual fuel assembly class as listed in Table 1-1e.

The NUHOMS®-24P Long Cavity DSC is designed for use with standard Burnable Poison Rod Assembly (BPRA) designs for the B&W 15x15 and Westinghouse 17x17 fuel types as listed in Appendix J of the FSAR. The NUHOMS®-24PHB Long Cavity DSC is designed for use with standard BPRA designs for the B&W 15x15 fuel types listed in Appendix N of the FSAR.

The design basis PWR BPRA for shielding source terms and thermal decay heat load is the Westinghouse 17x17 Pyrex Burnable Absorber, while the DSC internal pressure analysis is limited by B&W 15x15 BPRAs. In addition, BPRAs with cladding failures were determined to be acceptable for loading into NUHOMS®-24P Long Cavity DSC as evaluated in Appendix J of the FSAR. The acceptability of loading BPRAs, including damaged BPRAs into 32PT-L100 and 32PT-L125 DSC configurations is provided in Appendix M of the FSAR.

The NUHOMS®-24P is designed for unirradiated fuel with an initial fuel enrichment of up to 4.0 wt. % U-235, taking credit for soluble boron in the DSC cavity water during loading operations. Section 1.2.15 defines the requirements for boron concentration in the DSC cavity water for the NUHOMS®-24P design only. In addition, the fuel assemblies qualified for storage in NUHOMS®-24P DSC have an equivalent unirradiated enrichment of less than or equal to 1.45 wt. % U-235. Figure 1-1 defines the required burnup as a function of initial enrichment. The NUHOMS®-52B is designed for unirradiated fuel with an initial enrichment of less than or equal to 4.0 wt. % U-235.

The NUHOMS®-61BT is designed for unirradiated fuel with an initial enrichment of less than or equal to 4.4 wt. % U-235.

The NUHOMS®-32PT is designed for unirradiated fuel with an initial fuel enrichment of up to 5.0 wt. % U-235 as shown in Table 1-1g, taking credit for Poison Rod Assemblies (PRAs), poison plates, and soluble boron in the DSC cavity water during loading operations. Specification 1.2.15a defines the requirements for boron concentration in the DSC cavity water for the NUHOMS®-32PT design only.

Table 1-1c
BWR Fuel Specifications of Intact Fuel to be Stored in the Standardized NUHOMS®-61BT DSC

Physical Parameters:	
Fuel Design:	7x7, 8x8, 9x9, or 10x10 BWR fuel assemblies manufactured by General Electric *or Exxon/ANF* or equivalent reload fuel that are enveloped by the Fuel assembly design characteristics listed in Table 1-1d.
Cladding Material:	Zircaloy
Fuel Damage:	Cladding damage in excess of pinhole leaks or hairline cracks is not authorized to be stored as "Intact BWR Fuel".
Channels:	Fuel may be stored with or without fuel channels
Maximum Assembly Length (unirradiated)	176.2 in
Nominal Assembly Width	5.44 in
Maximum Assembly Weight	705 lbs
Radiological Parameters:	No interpolation of Radiological Parameters is permitted between Groups.
Group 1:	
Maximum Burnup:	27,000 MWd/MTU
Minimum Cooling Time:	5-years
Maximum Lattice Average Initial Enrichment:	See Minimum Boron Loading Below
Minimum Initial Bundle Average Enrichment:	2.0 wt. % U-235
Maximum Initial Uranium Content:	198 kg/assembly
Maximum Decay Heat:	300 W/assembly
Group 2:	
Maximum Burnup:	35,000 MWd/MTU
Minimum Cooling Time:	8-years
Maximum Lattice Average Initial Enrichment:	See Minimum Boron Loading Below
Minimum Initial Bundle Average Enrichment:	2.65 wt. % U-235
Maximum Initial Uranium Content:	198 kg/assembly
Maximum Decay Heat:	300 W/assembly
Group 3:	
Maximum Burnup:	37,200 MWd/MTU
Minimum Cooling Time:	6.5-years
Maximum Lattice Average Initial Enrichment:	See Minimum Boron Loading Below
Minimum Initial Bundle Average Enrichment:	3.38 wt. % U-235
Maximum Initial Uranium Content:	198 kg/assembly
Maximum Decay Heat:	300 W/assembly
Group 4:	
Maximum Burnup:	40,000 MWd/MTU
Minimum Cooling Time:	10-years
Maximum Lattice Average Initial Enrichment:	See Minimum Boron Loading Below
Minimum Initial Bundle Average Enrichment:	3.4 wt. % U-235
Maximum Initial Uranium Content:	198 kg/assembly
Maximum Decay Heat:	300 W/assembly
Minimum Boron Loading	
Lattice Average Enrichment (wt%U-235)	Minimum B-10 Content in Poison Plates
4.4	Type C Basket
4.1	Type B Basket
3.7	Type A Basket
Alternate Radiological Parameters:	
Maximum Initial Enrichment:	*See Minimum Boron Loading Above*
Fuel Burnup, Initial Bundle Average Enrichment, and Cooling Time:	*See Table 1-2g*
Maximum Initial Uranium Content:	*198 kg/assembly*

Table 1-1d
BWR Fuel Assembly Design Characteristics[1] [2] for the NUHOMS®-61BT DSC

Transnuclear, ID	**7 x 7-49/0**	**8 x 8-63/1**	**8 x 8-62/2**	**8 x 8 - 60/4**	**8 x 8-60/1**	**9 x 9-74/2**	**10x10-92/2**	***7x7-49/0***	***7x7-49/0***	***7x7 48/1Z***	***8x8 – 60/4Z***
GE Designations *(Unirradiated)*	GE2 GE3	GE4	GE-5 GE-Pres GE-Barrier GE8 Type I	GE8 Type II	GE9 GE10	GE11 GE13	GE12	*GE1*	*ENC III-A*	*ENC III*[3]	*ENC Va & ENC Vb*
Max Length (in)	176.2	176.2	176.2	176.2	176.2	176.2	176.2	*5.44*	*5.44*	*5.44*	*5.44*
Nominal Width (in) (excluding channels)	5.44	5.44	5.44	5.44	5.44	5.44	5.44	*5.278*	*5.278*	*5.278*	*5.278*
Fissile Material	UO_2	UO_2	UO_2	UO_2	UO_2	UO_2	UO_2	*UO_2*	*UO_2*	*UO_2*	*UO_2*
Number of Fuel Rods	49	63	62	60	60	66 – Full 8 – Partial	78 – Full 14 - Partial	*49*	*49*	*48*	*60*
Number of Water Holes	0	1	2	4	1	2	2	*0*	*0*	*1*[4]	*4*[4]

(1) Any fuel channel thickness from 0.065 to 0.120 inch is acceptable on any of the fuel designs.
(2) Maximum fuel assembly weight with channel is 705 lb.
(3) *Includes ENC III-E and ENC III-F.*
(4) *Solid Zirc rods instead of water holes.*

Table 1-1j
BWR Fuel Specification of Damaged Fuel to be Stored in the Standardized NUHOMS®-61BT DSC

PHYSICAL PARAMETERS:	
Fuel Design:	*7x7, 8x8 BWR damaged fuel assemblies manufactured by General Electric or Exxon/ANF or equivalent reload fuel that are enveloped by the Fuel assembly design characteristics listed in Table 1-1d for the 7x7 and 8x8 designs only.*
Cladding Material:	*Zircaloy*
Fuel Damage:	*Damaged BWR fuel assemblies are fuel assemblies containing fuel rods with known or suspected cladding defects greater than hairline cracks or pinhole leaks. Missing cladding and/or crack size in the fuel pins is to be limited such that a fuel pellet is not able to pass through the gap created by the cladding opening during handling and retrievability is assured following Normal/Off-Normal conditions. Damaged fuel shall be stored with Top and Bottom Caps for Failed Fuel. Damaged fuel may only be stored in the 2x2 compartments of the "Type C" NUHOMS®-61BT Canister.*
Channels:	*Fuel may be stored with or without fuel channels.*
Maximum Assembly Length (unirradiated)	*176.2 in*
Nominal Assembly Width (excluding channels)	*5.44 in*
Maximum Assembly Weight	*705 lbs*
RADIOLOGICAL PARAMETERS:	*No interpolation of Radiological Parameters is permitted between groups.*
Group 1:	
Maximum Burnup:	*27,000 MWd/MTU*
Minimum Cooling Time:	*5-years*
Maximum Initial Lattice Average Enrichment:	*4.0 wt. % U-235*
Maximum Pellet Enrichment:	*4.4 wt. % U-235*
Minimum Initial Bundle Average Enrichment:	*2.0 wt. % U-235*
Maximum Initial Uranium Content:	*198 kg/assembly*
Maximum Decay Heat:	*300 W/assembly*
Group 2:	
Maximum Burnup:	*35,000 MWd/MTU*
Minimum Cooling Time:	*8-years*
Maximum Initial Lattice Average Enrichment:	*4.0 wt. % U-235*
Maximum Pellet Enrichment:	*4.4 wt. % U-235*
Minimum Initial Bundle Average Enrichment:	*2.65 wt. % U-235*
Maximum Initial Uranium Content:	*198 kg/assembly*
Maximum Decay Heat:	*300 W/assembly*
Group 3:	
Maximum Burnup:	*37,200 MWd/MTU*
Minimum Cooling Time:	*6.5-years*
Maximum Initial Lattice Average Enrichment:	*4.0 wt. % U-235*
Maximum Pellet Enrichment:	*4.4 wt. % U-235*
Minimum Initial Bundle Average Enrichment:	*3.38 wt. % U-235*
Maximum Initial Uranium Content:	*198 kg/assembly*
Maximum Decay Heat:	*300 W/assembly*

Table 1-1j
BWR Fuel Specification of Damaged Fuel to be Stored in the Standardized NUHOMS®-61BT DSC

(Concluded)

RADIOLOGICAL PARAMETERS:	
Group 4:	
Maximum Burnup:	*40,000 MWd/MTU*
Minimum Cooling Time:	*10-years*
Maximum Initial Lattice Average Enrichment:	*4.0 wt. % U-235*
Maximum Pellet Enrichment:	*4.4 wt. % U-235*
Minimum Initial Bundle Average Enrichment:	*3.4 wt. % U-235*
Maximum Initial Uranium Content:	*198 kg/assembly*
Maximum Decay Heat:	*300 W/assembly*
ALTERNATE RADIOLOGICAL PARAMETERS:	
Maximum Initial Lattice Average Enrichment:	*4.0 wt. % U-235*
Fuel Burnup, Initial Bundle Average Enrichment, and Cooling Time:	*See Table 1-2g*
Maximum Pellet Enrichment:	*4.4 wt. % U-235*
Maximum Initial Uranium Content:	*198 kg/assembly*

Table 1-2g
BWR Fuel Qualification Table for NUHOMS®-61BT DSC (0.3 kW/assembly)

(Minimum required years of cooling time after reactor core discharge)

BU (GWd/MTU)	Initial Enrichment																													
	1.4	1.5	1.6	1.7	1.8	1.9	2.0	2.1	2.2	2.3	2.4	2.5	2.6	2.7	2.8	2.9	3.0	3.1	3.2	3.3	3.4	3.5	3.6	3.7	3.8	3.9	4.0	4.1	4.2	4.3	4.4
10	4	4	4	4	4	4	4	4	4	4	4	4	4	4	4	4	4	4	4	4	4	4	4	4	4	4	4	4	4	4	4
15	4	4	4	4	4	4	4	4	4	4	4	4	4	4	4	4	4	4	4	4	4	4	4	4	4	4	4	4	4	4	4
20	5	5	4	4	4	4	4	4	4	4	4	4	4	4	4	4	4	4	4	4	4	4	4	4	4	4	4	4	4	4	4
25	5	5	5	5	5	5	5	5	5	5	5	5	5	5	5	5	5	5	5	5	5	5	5	5	5	5	5	5	4	4	4
28	Not Acceptable or Not Analyzed				6	6	6	6	6	6	6	6	6	6	6	6	6	5	5	5	5	5	5	5	5	5	5	5	5	5	5
30					7	7	7	7	7	7	6	6	6	6	6	6	6	6	6	6	6	6	6	6	6	6	6	6	6	6	6
32					8	8	8	8	8	7	7	7	7	7	7	7	7	7	7	7	7	7	6	6	6	6	6	6	6	6	6
34					9	9	9	9	9	9	8	8	8	8	8	8	8	8	8	7	7	7	7	7	7	7	7	7	7	7	7
36					11	11	11	10	10	10	10	10	9	9	9	9	9	9	9	9	8	8	8	8	8	8	8	8	8	8	8
38					14	13	13	12	12	12	12	11	11	11	11	11	10	10	10	10	10	10	9	9	9	9	9	9	9	9	9
39					15	14	14	14	13	13	13	12	12	12	12	11	11	11	11	11	10	10	10	10	10	10	10	9	9	9	9
40					16	16	15	15	15	14	14	14	13	13	13	12	12	12	12	12	11	11	11	11	11	10	10	10	10	10	10

- *Use burnup and enrichment to lookup minimum cooling time in years. Licensee is responsible for ensuring that uncertainties in fuel enrichment and burnup are correctly accounted for during fuel qualification.*
- *Round burnup UP to next higher entry, round enrichments DOWN to next lower entry.*
- *Fuel with an initial enrichment less than 1.4 and greater than 4.4 wt.% U-235 is unacceptable for storage.*
- *Fuel with a burnup greater than 45 GWd/MTU is unacceptable for storage*
- *Fuel with a burnup less than 10 GWd/MTU is acceptable for storage after 4 years cooling.*
- *Example: An assembly with an initial enrichment of 3.75 wt. % U-235 and a burnup of 39.5 GWd/MTU is acceptable for storage after a eleven-year cooling time as defined by 3.7 wt. % U-235 (rounding down) and 40 GWd/MTU (rounding up) on the qualification table.*

ATTACHMENT C
FSAR Revision 6 Changed Pages

(Revisions indicated relative to FSAR, Revision 6. New text is shown in *italics).* Listed below are the affected FSAR Appendix K pages:

- Page K.1-1
- Page K.1-6
- Page K.1-8
- Page K.1-9
- Page K.2-2
- Page K.2-4
- Page K.2-10
- Page K.2-12 through K.2-15
- Page K.2-23
- Page K.2-27 (New)
- Page K.3.6-18
- Page K.3.6-19
- Page K.3.6-19a
- Page K.3.6-19b
- Page K.3.6-25a (New)
- Page K.3.6-25b (New)
- Page K.3.6-25c (New)
- Page K.3.6-52
- Page K.3.6-53
- Page K.3.8-1
- Page K.5-1
- Page K.5-3 through K.5-5
- Page K.5-5a (New)
- Page K.5-5b (New)
- Page K.5-33
- Page K.5-34
- Page K.6-1
- Page K.6-50
- Page K.6-51
- Page K.6-54
- Page K.6-55
- Page K.6-87

K.1 General Discussion

Appendix K addresses the Important to Safety aspects of storing spent fuel in the NUHOMS®-61BT system. The NUHOMS®-61BT system consists of a NUHOMS®-61BT Dry Shielded Canister (DSC) stored in a NUHOMS® Horizontal Storage Module (HSM) and transferred in a OS197 Transfer Cask (TC). The format follows the guidance provided in NRC Regulatory Guide 3.61 [1.1].

The NUHOMS®-61BT system provides confinement, shielding, criticality control and passive heat removal independent of any other facility structures or components. The NUHOMS®-61BT DSC also maintains structural integrity of the fuel during storage.

The addition of NUHOMS®-61BT DSC to the standardized NUHOMS® system was approved by the NRC effective September 12, 2001 as documented in Amendment No. 3 to CoC 1004 and the associated Safety Evaluation Report [1.4]. *T*he NUHOMS®-61BT DSC is designed to store 61 intact, or a combination of up to 16 damaged and the remainder intact BWR fuel assemblies *as described in Section K.2.* However, *as noted in SER section 8.1.1, the structural analyses for* damaged BWR fuel *did not include the effects of the stresses on the fuel cladding that would be associated with normal and off-normal conditions. Accordingly, damaged fuel was* not authorized for storage in *the* NUHOMS®-61BT system.

*This revision of Appendix K provides the supporting structural analysis for the damaged BWR fuel cladding to demonstrate compliance with the handling and retrievability standards set forth in ISG-1 [*1.6*]. In addition, additional fuel types have been added to the authorized contents listed in Section K.2 and supporting analyses provided.*

K.1.3 Identification of Agents and Contractors

Transnuclear, Inc. (TN), provides the design, analysis, licensing support and quality assurance for the NUHOMS®-61BT system. Fabrication of the NUHOMS®-61BT system cask is done by one or more qualified fabricators under TN's quality assurance program. TN's quality assurance program is described in Chapter K.13. This program is written to satisfy the requirements of 10 CFR 72, Subpart G and covers control of design, procurement, fabrication, inspection, testing, operations and corrective action. Experienced TN operations personnel provide training to utility personnel prior to first use of the NUHOMS®-61BT system and prepare generic operating procedures.

Managerial and administrative controls, which are used to ensure safe operation of the casks, are provided by the host utility. NUHOMS®-61BT system operations and maintenance are performed by utility personnel. Decommissioning activities will be performed by utility personnel in accordance with site procedures.

TN provides specialized services for the nuclear fuel cycle that support transportation, storage and handling of spent nuclear fuel, radioactive waste and other radioactive materials. TN is the holder of CoC 1004.

K.1.6 References

1.1 US Nuclear Regulatory Commission, Regulatory Guide 3.61, Standard Format and Content for a Topical Safety Analysis Report for a Spent Fuel Dry Storage Cask, February, 1989.

1.2 10CFR72, Rules and Regulations, Title 10, Chapter 1, Code of Federal Regulations - Energy, U.S. Nuclear Regulatory Commission, Washington, D.C., "Licensing Requirements for the Independent Storage of Spent Nuclear Fuel and High-Level Radioactive Waste."

1.3 10CFR71, Rules and Regulations, Title 10, Chapter 1, Code of Federal Regulations - Energy, U.S. Nuclear Regulatory Commission, Washington, D.C., "Packaging and Transportation of Radioactive Material."

1.4 U.S. Nuclear Regulatory Commission, Office of the Nuclear Materials Safety and Safeguards, "Safety Evaluation Report, Addition of the NUHOMS®-61BT Dry Shielded Canister and Additional Fuel Types," September 17, 2001.

1.5 NUHOMS® Certificate of Compliance for Dry Spent Fuel Storage Casks, Certificate of Number 1004, Amendment No. 3, September 2001 (Docket 72-1004).

1.6 Spent Fuel Project Office, Interim Staff Guidance – 1, "Damaged Fuel," November 2, 1998.

K.2.1 Spent Fuel To Be Stored

The NUHOMS®-61BT DSC is designed to store 61 intact, or up to 16 damaged and the remainder intact, for a total of 61, standard BWR fuel assemblies with or without fuel channels. The NUHOMS®-61BT DSC can store intact BWR fuel assemblies with the characteristics described in Table K.2-1, or damaged and intact BWR fuel assemblies with the characteristics described in Table K.2-2, which include a variety of cooling times, enrichment and maximum bundle average burnup. Damaged BW*R* fuel assemblies are fuel assemblies containing fuel rods with known or suspected cladding defects greater than hairline cracks or pinhole leaks. Missing cladding and/or crack size in the fuel pins is to be limited such that a fuel pellet is not able to pass through the gap created *by the cladding* opening during handling and retrievability is assured following Normal/Off-Normal conditions.

The NUHOMS®-61BT DSC may store BWR fuel assemblies with a maximum decay heat of 300 watts/assembly, or a total of 18.3 kW. The NUHOMS®-61BT DSC is inerted and backfilled with helium at the time of loading. The maximum fuel assembly weight with channel is 705 lbs.

Calculations were performed to determine the fuel assembly type which was most limiting for each of the analyses including shielding, criticality, heat load and confinement. The fuel assemblies considered are listed in Table K.2-3. It was determined that the GE 7x7 is the enveloping fuel design for the shielding source term calculation. However, for criticality safety, the GE 10x10 assembly is the most reactive, and is evaluated for configurations that bound all normal, off-normal and accident conditions.

The NUHOMS®-61BT DSC has three basket configurations, based on the boron content in the poison plates. The maximum lattice average enrichment authorized for Type A, B and C NUHOMS®-61BT DSCs is 3.7, 4.1 and 4.4 weight percent (wt. %) U-235, respectively.

Intact BWR fuel assemblies may be stored in any of the three NUHOMS®-61BT DSC Types provided the loading meets the maximum lattice average enrichment limit for the NUHOMS®-61BT DSC type, as given on Table K.2-4. Damaged BWR fuel assemblies may only be stored in Type C NUHOMS®-61BT DSCs with endcaps installed on each four compartment assembly where a damaged fuel assembly is stored.

Fuel assemblies with various combinations of burnup, enrichment and cooling time can be stored in the NUHOMS®-61BT DSC as long as the fuel assembly parameters fall within the design limits specified in Table K.2-1 or Table K.2-2, and Table K.2-4. *A simplified approach for users of the NUHOMS®-61BT system in selection of acceptable fuel assemblies is provided in Table K.2-11.*

For calculating the maximum internal pressure in the NUHOMS®-61BT DSC, it is assumed that 1% of the fuel rods are damaged for normal conditions, up to 10% of the fuel rods are damaged for off normal conditions, and 100% of the fuel rods will be damaged following a design basis accident event. A minimum of 100% of the fill gas and 30% of the fission gases (e.g., H-3, Kr

K.2.2 Design Criteria for Environmental Conditions and Natural Phenomena

The NUHOMS®-61BT DSC is handled and stored in the same manner as the existing NUHOMS®-52B system. The environmental conditions and natural phenomena are the same as described in Chapter 3. Updated criteria are given in the applicable section. Table K.2-10 summarizes the design criteria for the 61BT DSC. This table also summarizes the applicable codes and standards utilized for design. Design criteria for the NUHOMS® HSM and TC remain *the same* as shown in Table 3.2-1.

K.2.2.1 Tornado Wind and Tornado Missiles

No change.

K.2.2.2 Water Level (Flood) Design

No change.

K.2.2.3 Seismic Design

No change.

K.2.2.4 Snow and Ice Loading

No change.

K.2.2.5 Combined Load Criteria

The NUHOMS®-61BT system is subjected to the same loads as the existing NUHOMS®-24P or -52B system. The criteria applicable to the HSM and the OS197 TC are the same as those found in Chapter 3. The criteria applicable to the NUHOMS®-61BT DSC are found in the following subsections.

K.2.2.5.1 NUHOMS®–61BT DSC Structure Design Criteria

The NUHOMS®-61BT DSC is designed using the ASME Boiler and Pressure Vessel Code [2.2] criteria given in Chapter 3, except as noted in the following sections. A summary of the NUHOMS®-61BT DSC load combinations is presented in Table K.2-5.

K.2.2.5.1.1 NUHOMS®–61BT DSC Shell Stress Limits

The stress limits for the NUHOMS®-61BT DSC shell are taken from the ASME Boiler and Pressure Vessel Code, Section III, Subsection NB, Article NB-3200 [2.2] for normal condition loads (Level A) and Appendix F for accident condition loads (Level D).

K.2.5 Summary of NUHOMS®-61BT DSC Design Criteria

The additional principal design criteria for the NUHOMS®-61BT DSC are presented in Table K.2-1. The NUHOMS®-61BT DSC is designed to store 61 intact, or up to 16 damaged and the remainder intact, for a total of 61, standard BWR fuel assemblies with or without fuel channels with assembly average burnup, initial enrichment and cooling time as described in Table K.2-1, Table K.2-2 and Table K.2-4.

The maximum total heat generation rate of the stored fuel is limited to 0.3 kW per fuel assembly and 18.3 kW per NUHOMS®-61BT DSC in order to keep the maximum fuel cladding temperature below the limit necessary to ensure cladding integrity for 40 years storage [2.4]. The fuel cladding integrity is assured by the NUHOMS®-61BT DSC and basket design which limits fuel cladding temperature and maintains a nonoxidizing environment in the cask cavity [2.5], as described in Section K.4.

The NUHOMS®-61BT DSC (shell and closure) is designed and fabricated to the maximum practicable extent as a Class I component in accordance with the rules of the ASME Boiler and Pressure Vessel Code, Section III, Subsection NB, Article NB-3200.

The NUHOMS®-61BT DSC is designed to maintain a subcritical configuration during loading, handling, storage and accident conditions. Poison materials in the fuel basket are employed to maintain the upper subcritical limit of 0.9414. The basket is designed and fabricated to the maximum practicable extent in accordance with the rules of the ASME Boiler and Pressure Vessel Code, Section III, Subsection NG, Article NG-3200.

The NUHOMS®-61BT DSC design, fabrication and testing are covered by Transnuclear's Quality Assurance Program which conforms to the criteria in Subpart G of 10CFR72.

The NUHOMS®-61BT DSC is designed to withstand the effects of severe environmental conditions and natural phenomena such as earthquakes, tornadoes, lightning and floods. Section K.11 describes the NUHOMS®-61BT DSC behavior under these accident conditions.

Table K.2-1
Intact BWR Fuel Assembly Characteristics

PHYSICAL PARAMETERS:	
Fuel Design:	7x7, 8x8, 9x9, or 10x10 intact BWR fuel assemblies manufactured by General Electric or *Exxon/ANF or* equivalent reload fuel that are enveloped by the Fuel assembly design characteristics listed in Table K.2-3.
Cladding Material:	Zircaloy
Fuel Damage:	Cladding damage in excess of pinhole leaks or hairline cracks is not authorized to be stored as "Intact BWR Fuel."
Channels:	Fuel may be stored with or without fuel channels
Maximum Assembly length (Unirradiated)	*176.2 in*
Nominal Assembly Width (excluding channels)	*5.44 in*
Maximum Assembly Weight	*705 lbs*
RADIOLOGICAL PARAMETERS[1]:	
Group 1: Maximum Burnup:	27,000 MWd/MTU
Minimum Cooling Time:	5-years
Maximum Initial Enrichment:	See Table K.2-4
Minimum Initial Bundle Average Enrichment:	2.0 wt. % U-235
Maximum Initial Uranium Content:	198 kg/assembly
Maximum Decay Heat:	300 W/assembly
Group 2: Maximum Burnup:	35,000 MWd/MTU
Minimum Cooling Time:	8-years
Maximum Initial Enrichment:	See Table K.2-4
Minimum Initial Bundle Average Enrichment:	2.65 wt. % U-235
Maximum Initial Uranium Content:	198 kg/assembly
Maximum Decay Heat:	300 W/assembly
Group 3: Maximum Burnup:	37,200 MWd/MTU
Minimum Cooling Time:	6.5-years
Maximum Initial Enrichment:	See Table K.2-4
Minimum Initial Bundle Average Enrichment:	3.38 wt. % U-235
Maximum Initial Uranium Content:	198 kg/assembly
Maximum Decay Heat:	300 W/assembly
Group 4: Maximum Burnup:	40,000 MWd/MTU
Minimum Cooling Time:	10-years
Maximum Initial Enrichment:	See Table K.2-4
Minimum Initial Bundle Average Enrichment:	3.4 wt. % U-235
Maximum Initial Uranium Content:	198 kg/assembly
Maximum Decay Heat:	300 W/assembly
Alternate Radiological Parameters:	
Maximum Initial Enrichment:	*See Table K.2-4*
Fuel Burnup, Initial Bundle Average Enrichment, and Cooling Time:	*See Table K.2-11*
Maximum Initial Uranium Content:	*198 kg/assembly*

[1] Fuel assemblies fully complying with any of the four groups of parameters *or alternate radiological parameters* are suitable for storage in the NUHOMS®-61BT DSC. No interpolation of radiological parameters is permitted between groups *1 to 4*.

Table K.2-2
Damaged BWR Fuel Assemblies Characteristics

PHYSICAL PARAMETERS:	
Fuel Design:	7x7, 8x8 BWR damaged fuel assemblies manufactured by General Electric or *Exxon/ANF or* equivalent reload fuel that are enveloped by the Fuel assembly design characteristics listed in Table K.2-3 for the 7x7 and 8x8 designs only.
Cladding Material:	Zircaloy
Fuel Damage:	Damaged BWR fuel assemblies are fuel assemblies containing fuel rods with known or suspected cladding defects greater than hairline cracks or pinhole leaks. Missing cladding and/or crack size in the fuel pins is to be limited such that a fuel pellet is not able to pass through the gap created by the cladding opening during handling and retrievability is assured following Normal/Off-Normal conditions. Damaged fuel shall be stored with Top and Bottom Caps for Failed Fuel. Damaged fuel may only be stored in the 2x2 compartments of the "Type C" NUHOMS®-61B*T* Canister.
Channels:	Fuel may be stored with or without fuel channels.
Maximum Assembly Length (unirradiated)	*176.2 in*
Nominal Assembly Width (excluding channels)	*5.44 in*
Maximum Assembly Weight	*705 lbs*
RADIOLOGICAL PARAMETERS[1]:	
Group 1:	
Maximum Burnup:	27,000 MWd/MTU
Minimum Cooling Time:	5-years
Maximum Initial Lattice Average Enrichment:	4.0 wt. % U-235
Maximum Pellet Enrichment:	4.4 wt. % U-235
Minimum Initial Bundle Average Enrichment:	2.0 wt. % U-235
Maximum Initial Uranium Content:	198 kg/assembly
Maximum Decay Heat:	300 W/assembly
Group 2:	
Maximum Burnup:	35,000 MWd/MTU
Minimum Cooling Time:	8-years
Maximum Initial Lattice Average Enrichment:	4.0 wt. % U-235
Maximum Pellet Enrichment:	4.4 wt. % U-235
Minimum Initial Bundle Average Enrichment:	2.65 wt. % U-235
Maximum Initial Uranium Content:	198 kg/assembly
Maximum Decay Heat:	300 W/assembly
Group 3:	
Maximum Burnup:	37,200 MWd/MTU
Minimum Cooling Time:	6.5-years
Maximum Initial Lattice Average Enrichment:	4.0 wt. % U-235
Maximum Pellet Enrichment:	4.4 wt. % U-235
Minimum Initial Bundle Average Enrichment:	3.38 wt. % U-235
Maximum Initial Uranium Content:	198 kg/assembly
Maximum Decay Heat:	300 W/assembly

Table K.2-2
Damaged BWR Fuel Assemblies Characteristics

(Concluded)

RADIOLOGICAL PARAMETERS:[1]	
Group 4:	
Maximum Burnup:	40,000 MWd/MTU
Minimum Cooling Time:	10-years
Maximum Initial Lattice Average Enrichment:	4.0 wt. % U-235
Maximum Pellet Enrichment:	4.4 wt. % U-235
Minimum Initial Bundle Average Enrichment:	3.4 wt. % U-235
Maximum Initial Uranium Content:	198 kg/assembly
Maximum Decay Heat:	300 W/assembly
ALTERNATE RADIOLOGICAL PARAMETERS:	
Maximum Initial Lattice Average Enrichment:	*4.0 wt. % U-235*
Fuel Burnup, Initial Bundle Average Enrichment, and Cooling Time:	*Per Table K.2-11*
Maximum Pellet Enrichment:	*4.4 wt. % U-235*
Maximum Initial Uranium Content:	*198 kg/assembly*

[1] *Fuel assemblies fully complying with any of the four groups of parameters or alternate radiological parameters are suitable for storage in the NUHOMS®-61BT* DSC. *No interpolation of radiological parameters is permitted between groups 1 to 4.*

Table K.2-3
BWR Fuel Assembly Design Characteristics[1] [2]

Transnuclear, ID	**7 x 7-49/0**	**8 x 8-63/1**	**8 x 8-62/2**	**8 x 8-60/4**	**8 x 8-60/1**	**9 x 9-74/2**	***10x10-92/2***	***7x7 –49/0***	***7x7 48/1Z***	***8x8 – 60/4Z***
Fuel Type	*GE1* GE2 GE3	GE4	GE-5 GE-Pres GE-Barrier GE8 Type I	GE8 Type II	GE9 GE10	GE11 GE13	*GE12*	*ENC III-A*	*ENC III*[3]	*ENC Va & ENC Vb*
Nominal Width (in) (excluding channels)	5.44	5.44	5.44	5.44	5.44	5.44	*5.44*	*5.44*	*5.44*	*5.44*
Channel Internal Width (in)	5.278	5.278	5.278	5.278	5.278	5.278	*5.278*	*5.278*	*5.278*	*5.278*
Fissile Material	UO_2	UO_2	UO_2	UO_2	UO_2	UO_2	*UO_2*	*UO_2*	*UO_2*	*UO_2*
Number of Fuel Rods	49	63	62	60	60	66 – Full 8 – Partial	*78 – Full 14 – Partial*	*49*	*48*	*60*
Number of Water Holes	0	1	2	4	1	2	*2*	*0*	*1*[4]	*4*[4]

(1) Any fuel channel thickness from 0.065 to 0.120 inch is acceptable on any of the fuel designs.
(2) Maximum fuel assembly weight with channel is 705 lb.
(3) *Includes ENC III-E and ENC III-F.*
(4) *Solid Zirc rods instead of water holes.*

Table K.2-8
Classification of NUHOMS®-DSC Components

IMPORTANT TO SAFETY	NOT IMPORTANT TO SAFETY
Canister Assembly	Siphon tube
	Quick connect coupling
Canister shell	Male connector
Bottom shield plug	Alignment key
Inner bottom cover	Canister lifting lug
Outer bottom cover	Electroless nickel coating
Grapple ring and support	
Top shield plug	
Inner top cover plate	
Outer top cover plate	
Siphon/vent port cover plate	
Siphon vent block	
Support ring segment	
Test port plug	
Weld filler metal	
Storage Basket Assembly	
Fuel compartment	
Fuel compartment wrap	
Poison plate	
Basket plate	
Weld Stud, washer, hex nut	
Basket plate insert	
Basket rail	
Basket holddown plate	
Spacer pad	
Alignment leg	
Weld filler metal	
Top and Bottom Caps	

Table K.2-11
BWR Fuel Qualification Table for NUHOMS®-61BT DSC (0.3 kW/assembly)

(Minimum required years of cooling time after reactor core discharge)

BU (GWd/MTU)	Initial Enrichment																														
	1.4	1.5	1.6	1.7	1.8	1.9	2.0	2.1	2.2	2.3	2.4	2.5	2.6	2.7	2.8	2.9	3.0	3.1	3.2	3.3	3.4	3.5	3.6	3.7	3.8	3.9	4.0	4.1	4.2	4.3	4.4
10	4	4	4	4	4	4	4	4	4	4	4	4	4	4	4	4	4	4	4	4	4	4	4	4	4	4	4	4	4	4	4
15	4	4	4	4	4	4	4	4	4	4	4	4	4	4	4	4	4	4	4	4	4	4	4	4	4	4	4	4	4	4	4
20	5	5	4	4	4	4	4	4	4	4	4	4	4	4	4	4	4	4	4	4	4	4	4	4	4	4	4	4	4	4	4
25	5	5	5	5	5	5	5	5	5	5	5	5	5	5	5	5	5	5	5	5	5	5	5	5	5	5	5	5	4	4	4
28	Not Acceptable or Not Analyzed				6	6	6	6	6	6	6	6	6	6	6	6	6	5	5	5	5	5	5	5	5	5	5	5	5	5	5
30					7	7	7	7	7	7	6	6	6	6	6	6	6	6	6	6	6	6	6	6	6	6	6	6	6	6	6
32					8	8	8	8	8	7	7	7	7	7	7	7	7	7	7	7	7	7	6	6	6	6	6	6	6	6	6
34					9	9	9	9	9	9	8	8	8	8	8	8	8	8	8	7	7	7	7	7	7	7	7	7	7	7	7
36					11	11	11	10	10	10	10	10	9	9	9	9	9	9	9	9	8	8	8	8	8	8	8	8	8	8	8
38					14	13	13	12	12	12	12	11	11	11	11	11	10	10	10	10	10	10	9	9	9	9	9	9	9	9	9
39					15	14	14	14	13	13	13	12	12	12	12	11	11	11	11	11	10	10	10	10	10	10	10	9	9	9	9
40					16	16	15	15	15	14	14	14	13	13	13	12	12	12	12	12	11	11	11	11	11	10	10	10	10	10	10

- *Use burnup and enrichment to lookup minimum cooling time in years. Licensee is responsible for ensuring that uncertainties in fuel enrichment and burnup are correctly accounted for during fuel qualification.*
- *Round burnup UP to next higher entry, round enrichments DOWN to next lower entry.*
- *Fuel with an initial enrichment less than 1.4 and greater than 4.4 wt.% U-235 is unacceptable for storage.*
- *Fuel with a burnup greater than 45 GWd/MTU is unacceptable for storage*
- *Fuel with a burnup less than 10 GWd/MTU is acceptable for storage after 4 years cooling.*
- *Example: An assembly with an initial enrichment of 3.75 wt. % U-235 and a burnup of 39.5 GWd/MTU is acceptable for storage after a eleven-year cooling time as defined by 3.7 wt. % U-235 (rounding down) and 40 GWd/MTU (rounding up) on the qualification table.*

K.3.6.1.7 HSM Heat Shield Analysis

No change.

K.3.6.1.8 HSM Axial Retainer for DSC

The structural evaluation for the HSM axial retainer is addressed in Section K.3.7.3 paragraph C.

K.3.6.1.9 On-Site TC Analysis

The on-site transfer cask is evaluated for normal operating condition loads including:

1. Dead Weight Load
2. Thermal Loads
3. Handling Loads
4. Live Loads.

The NUHOMS® OS197 transfer cask is shown in Figures 1.3-6 and on the licensing drawings contained in Appendix E. Section 8.1.1.9 provides the evaluation of the transfer cask for the normal operating loads when handling the NUHOMS® 52B DSC. Thermal loads and live loads for the OS197 transfer cask with the NUHOMS®-61BT DSC are equivalent to or less than those for the cask with the NUHOMS® 52B DSC.

Section K.3.7.10.3 provides the evaluation of the OS197 transfer cask when handling the heavier payload due to NUHOMS®-61BT DSC.

K.3.6.1.10 *Damaged Fuel Integrity Assessment for Normal Loads*

The evaluation of the damaged fuel for normal loads is discussed in Section K.3.6.3.

K.3.6.2 Off-Normal Load Structural Analysis

Table K.3.6-2 shows the off-normal operating loads for which the NUHOMS® safety-related components are designed. This section describes the design basis off-normal events for the NUHOMS® system and presents analyses which demonstrate the adequacy of the design safety features of a NUHOMS® system.

For an operating NUHOMS® system, off-normal events could occur during fuel loading, cask handling, trailer towing, canister transfer and other operational events. Two off-normal events are defined which bound the range of off-normal conditions. The limiting off-normal events are defined as a jammed DSC during loading or unloading from the HSM and the extreme ambient temperatures of -40°F (winter) and +125°F (summer). These events envelope the range of

expected off-normal structural loads and temperatures acting on the DSC, transfer cask, and HSM. These off-normal events are described in Section 8.1.2.

K.3.6.2.1 Jammed DSC During Transfer

The interfacing dimensions of the top end of the transfer cask and the HSM access opening sleeve are specified so that docking of the transfer cask with the HSM is not possible should gross misalignments between the transfer cask and HSM exist. Furthermore, beveled lead-ins are provided on the ends of the transfer cask, DSC, and DSC support rails to minimize the possibility of a jammed DSC during transfer. Nevertheless, it is postulated that if the transfer cask is not accurately aligned with respect to the HSM, the DSC binds or becomes jammed during transfer operations.

There is no change in the outside diameter of the NUHOMS®-61BT DSC as compared to NUHOMS®-52B. In addition, the interfacing dimensions and design features of the HSM access opening, DSC Support Structure and the OS197 transfer as described in Section 8.1.2 remain unchanged. The insertion and extraction forces applied on the NUHOMS®-61BT during loading and unloading operations are the same as those specified for the NUHOMS®-52B system. Hence the analysis for a jammed canister as described in Section 8.1.2 for NUHOMS®-52B remains applicable to NUHOMS®-61BT system.

K.3.6.2.2 Off-Normal Thermal Loads Analysis

As described in Section 8.1.2, the NUHOMS® system is designed for use at all reactor sites within the continental United States. Therefore, off-normal ambient temperatures of -40°F (extreme winter) and 125°F (extreme summer) are conservatively chosen. In addition, even though these extreme temperatures would likely occur for a short period of time, it is conservatively assumed that these temperatures occur for a sufficient duration to produce steady state temperature distributions in each of the affected NUHOMS® components. Each licensee should verify that this range of ambient temperatures envelopes the design basis ambient temperatures for the ISFSI site. The NUHOMS® system components affected by the postulated extreme ambient temperatures are the transfer cask and DSC during transfer from the plant's fuel/reactor building to the ISFSI site, and the HSM during storage of a DSC.

Section K.4 provides the off-normal thermal analyses for storage and transfer mode for the NUHOMS®-61BT DSC. The resulting stress intensities for the NUHOMS®-61BT are acceptable.

K.3.6.2.3 Damaged Fuel Integrity Assessment for Off-Normal Loads

The evaluation of the damaged fuel for off-normal loads is discussed in Section K.3.6.3.

K.3.6.3 Damaged Fuel Integrity Assessment for Normal and Off-Normal Loads

Per the definition in Table K.2-2, damaged BWR fuel assemblies are fuel assemblies containing fuel rods with known or suspected cladding defects greater than hairline cracks or pinhole leaks.

Missing cladding and/or crack size in the fuel pins is to be limited such that a fuel pellet is not able to pass through the gap created by the cladding opening during handling and retrievability is assured following Normal/Off-Normal conditions.

This section summarizes the evaluations performed to demonstrate structural integrity of the damaged fuel under normal and off-normal operations loads. The evaluations consider the effects of cladding defect size, cladding rupture geometry, and reduced cladding thickness due to oxidation effects.

Normal operation loads for storage conditions include stresses due to dead weight, thermal, and handling loads resulting from DSC fuel loading/unloading, fuel transfer to the ISFSI, and DSC insertion/retrieval from the HSM. These handling/transfer operations are performed slowly by trained operations personnel and follow detailed procedures. The applicable off-normal load for storage conditions is the off-normal handling load (i.e. jammed canister condition).

In addition to the above evaluations, since the 61BT DSC is a dual purpose canister, the fuel cladding is also evaluated for normal transport loads, defined in the NUHOMS® MP197 Transport SAR [3.19].

Both linear-elastic stress analysis and linear-elastic fracture mechanics methods are employed to evaluate the integrity of the fuel cladding. BWR fuel with 7x7 and 8x8 arrays is considered. Table K.3.6-5 shows a summary of the fuel characteristics and design parameters used in these evaluations. A cladding thickness reduction of 200 μm has been conservatively assumed in the structural integrity evaluations to account for water side and inner surface oxidation.

The linear elastic stress analyses use basic stress equations, conservation of energy principles, and fundamental kinematic relationships to calculate cladding stresses due to normal and off-normal loads. The handling/transfer loads produce the controlling stresses from normal operation loads. The controlling off-normal load is the jammed canister load. The computed maximum stresses for the controlling loads are summarized in Table K.3.6-6. The computed maximum stresses are compared to the irradiated cladding yield stress, and a stress ratio is calculated. As shown in the table, the maximum stress ratios correspond to the hypothetical one-foot end and side drops. Substantial margins exist for all loads considered. All the stresses summarized in Table K.3.6-6 are compressive stresses with the exception of the one-foot side drop case, which produces tension stresses due to bending.

As shown in Table K.3.6-6, the maximum compressive load obtained from all analyzed load cases is significantly lower than the buckling capacity of 128g calculated for the irradiated fuel tube and documented in [3.19]. Thus, stability of the fuel tube cladding is maintained.

For the fracture mechanics evaluations, the hypothetical one-foot side (horizontal) drop load case (30g from [3.19]) is the limiting load case. Thus, a conservatively enveloping load of 30g acceleration is used for the fracture mechanics evaluations presented here. Three fracture mechanics models are used for determination of stress intensity factors, as follows:

1. *Model 1: Edge Crack in Beam Bending, as shown in Figure K.3.6-26 [3.20].*

2. *Model 2: Central Crack in Finite Width Strip Subject to Uniform Tension, as shown in Figure K.3.6-27 [3.20].*
3. *Model 3: Through-Wall Circumferential Crack in Cylinder Under Bending, as shown in Figure K.3.6-28 [3.21].*

These models correspond to flaw geometries that are conservatively defined for the fracture mechanics evaluations. It is conservatively assumed that the crack location is at the location of the spacer grids, which is the location of maximum bending moment. The bending stress in the fuel tube is based on the maximum bending moment calculated for a continuous beam model, as shown in Appendix 1 of [3.22]. The maximum bending stress is used to calculate the fracture toughness stress intensity, K_I.

The first geometry, shown in Figure K.3.6-26, shows an idealized view of the burst fuel tube (shown in (a)). The burst tube is further idealized into two separate plates (shown in (b)), whose dimensions are based on the assumption that the tube's cross section is maintained. The stress intensity factor solution for the plate configuration, shown in (c), is obtained from [3.20], assuming that the crack depth is equal to the tube thickness.

The second geometry, shown in Figure K.3.6-27, shows an idealized view of a fuel tube that has ruptured and bulged to a diameter larger that the original diameter. The tension load, P, is obtained by integration of the tensile loads caused by the bending moment. Stress intensity factor, K_I, is calculated using the solutions in [3.20] and assuming a flaw opening (i.e., crack length) to equivalent plate width ratio (2a/W) of 0.7. The equivalent plate width is based on the extended length of one-half the tube's circumference.

The third geometry, shown in Figure K.3.6-28, corresponds to a cylinder under bending moment. The solution from [3.21] is used to obtain stress intensity factor, assuming a flaw opening (i.e., crack length) to tube diameter ratio (2a/D) of 0.6.

The basis for the 0.6-0.7 crack length to equivalent plate width/tube diameter ratios is experimental tests on "as received" Zircalloy fuel tubes with measured burst temperatures of up to 909 °C, which showed flaw opening to diameter ratios of 0.4 to 0.5 [3.23]. The 2a/W or 2a/D ratios used in this evaluation are, for purposes of conservatism, increased to 0.6 - 0.7.

The stress intensity factors, K_I, obtained from each of the above described models are compared against the plane strain fracture toughness stress intensity, K_{IC}, obtained experimentally for Zircalloy cladding material, under irradiated conditions [3.24]. The results of the fracture mechanics evaluations are summarized in Table K.3.6-7. These results have been confirmed by linear elastic fracture mechanics models using computer program pc-CRACK™ [3.25].

These evaluations demonstrate that the damaged fuel assemblies in the NUHOMS®-61BT DSC retain their structural integrity when subjected to normal and off-normal operation loads and therefore fuel retrievability is assured per the requirements of ISG-1 [3.26].

Table K.3.6-5
Design Parameters of (7x7) and (8x8) BWR Fuel Assemblies

Fuel Tube Arrays	*7 x 7*[1]	*7 x 7*[1]	*7 x 7*[1]	*7 x 7*[1]	*8 x 8*[1]	*8 x 8*[1]	*8 x 8*[1]	*8 x 8*[1]	*8 x 8*[1]
Fuel Type	*GE1*	*GE2, GE3*	*ENC III-A*	*ENC III-E & F*	*GE4*	*GE5*	*GE8*	*GE9, GE10*	*ENC Va & ENC Vb*
No. of Fuel Rods	49	49	49	48	63	62	60	60	60
Max. Active Fuel Length (in)	144	144	144	144	146	150	150	150	144
Fuel Tube OD[2]*(in)*	0.562	0.555	0.562	0.562	0.485	0.475	0.475	0.475	0.493
Clad Thickness[2]*(in)*	0.0275	0.024	0.0275	0.0275	0.026	0.024	0.024	0.024	0.028
Fuel Tube ID[2] *(in)*	0.507	0.507	0.507	0.507	0.433	0.427	0.427	0.427	0.437
Fuel Tube Radius$_{ave}$ *(in)*	0.2673	0.2655	0.2673	0.2673	0.2295	0.2255	0.2255	0.2255	0.2325
Number of Spacers	7	7	7	7	7	7	7	7	7
Fuel Rod Span (in)	24.0	24.0	24.0	24.0	24.3	25.0	25.0	25.0	24.0
Fuel Tube Area (in^2 *)*	0.0464	0.04019	0.0464	0.0464	0.0376	0.0341	0.0341	0.0341	0.0411
Fuel Tube M.I (in^4*)*	0.00166	0.0014	0.00166	0.00166	0.0010	0.0009	0.0009	0.0009	0.00112
Fuel M.I. (in^4*)*	0.002784	0.003044	0.002355	0.002355	0.001602	0.001513	0.001513	0.001513	0.001513
Total Fuel Tube + Fuel M.I (in^4*)*	0.0044	0.0044	0.0040	0.0040	0.0026	0.0024	0.0024	0.0024	0.0026
Fuel Tube Weight (lbs)	1.72	1.48	1.72	1.72	1.39	1.26	1.26	1.26	1.52
Fuel Weight (lbs)	10.09	10.09	10.09	9.88	7.46	7.49	7.61	7.64	7.61
Total Fuel Tube + Fuel Wt. (lbs)	11.81	11.57	11.81	11.60	8.85	8.75	8.87	8.90	9.16
Irradiated Yield Stress (σ_y)[3]*, (psi)*	80,500	80,500	80,500	80,500	80,500	80,500	80,500	80,500	80,500
Young's Modulus (E)[3]*, psi*	10.4E6	10.4E6	10.4E6	10.4E6	10.4E6	10.4E6	10.4E6	10.4E6	10.4E6

(1) The Maximum Fuel Assembly Weight with Channel = 705 lb is used.

(2) Includes 200 μm reduction in cladding thickness to account for water side and inner side cladding corrosion.

(3) These values are taken from Reference [3.22].

Table K.3.6-6
Fuel Cladding Computed Stresses and Ratios to Yield Stress

Normal and Off Normal Load Case	*Computed Stress* σ_{Max} *(psi)*		*Ratio* σ_{max}/σ_y (1)
	7x7 Fuel	*8x8 Fuel*	
1. On site transfer from fuel building to ISFSI	*5,474*	*5,162*	*< 0.07*
2. Normal DSC insertion/retrieval to/from HSM	*719*	*678*	*< 0.01*
3. Off normal jammed canister load	*3,805*	*3,587*	*< 0.05*
4. Hypothetical one foot end drop	*10,973(2)*	*10,352(2)*	*< 0.14*
5. Hypothetical one foot side drop	*10,538*	*12,962*	*< 0.17*

(1) σ_{max} = *Maximum of 7x7 and 8x8 fuel rod cladding computed stresses.*
σ_y = *Yield stress of the Zircaloy cladding material equal to 80,500 psi [3.22].*

*(2) Bounding equivalent compressive load = 10,973 psi*0.04019 in^2 = 441 lbs. This is less than the lower bound buckling capacity load calculated using the critical buckling g load of 128g, from [3.19]. Thus, the lower bound buckling capacity load is 128*8.75 = 1,120 lbs (corresponding to 8x8 GE5 fuel).*

Table K.3.6-7
Stress Intensities of Fuel Tubes for One Foot Side Drop Load

Fracture Mechanics Model Geometry	$K_{I\,(Max)}$ (ksi $in^{1/2}$)		K_{IC} (ksi $in^{1/2}$)(1)	*Ratio* K_{IMAX} / K_{Ic}
	7x7 Fuel	*8x8 Fuel*		
Geometry #1	*10.7*	*11.6*	*35.0*	*0.34*
Geometry #2	*11.5*	*12.7*	*35.0*	*0.36*
Geometry # 3	*10.6*	*12.2*	*35.0*	*0.35*

(1) K_{IC} = Crack initiation fracture toughness (plane strain fracture toughness), from [3.24].

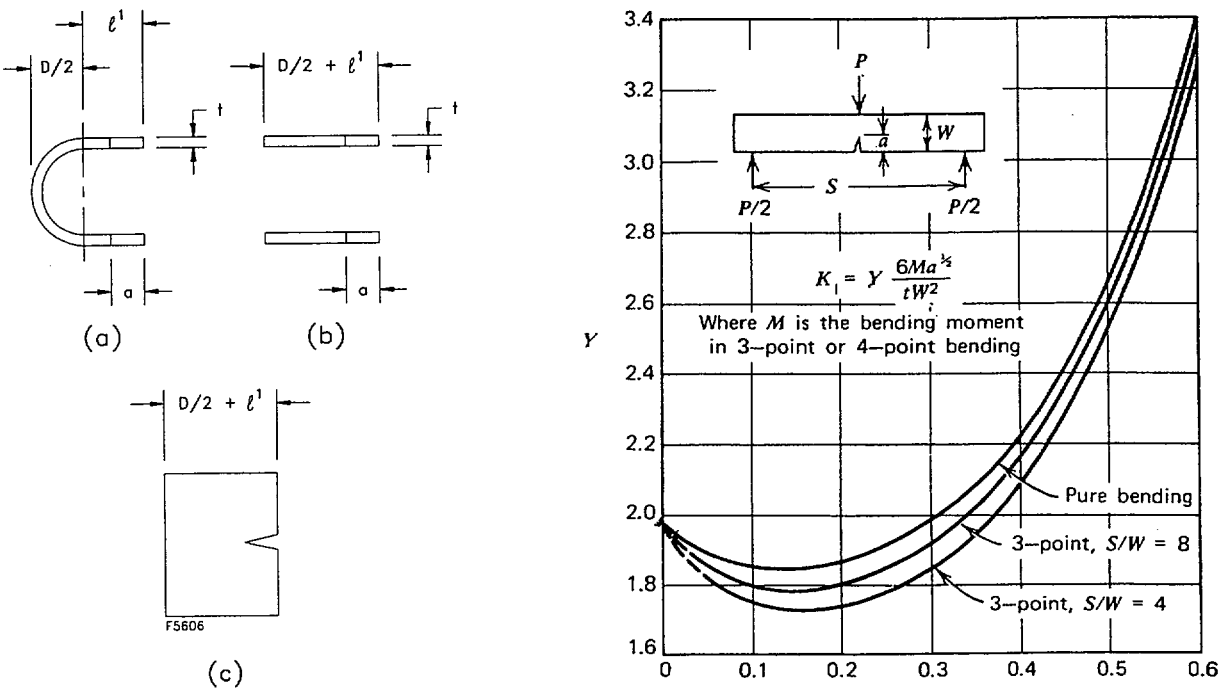

Figure K.3.6-26
Geometry Model #1: Edge Crack in Beam Bending [3.20]

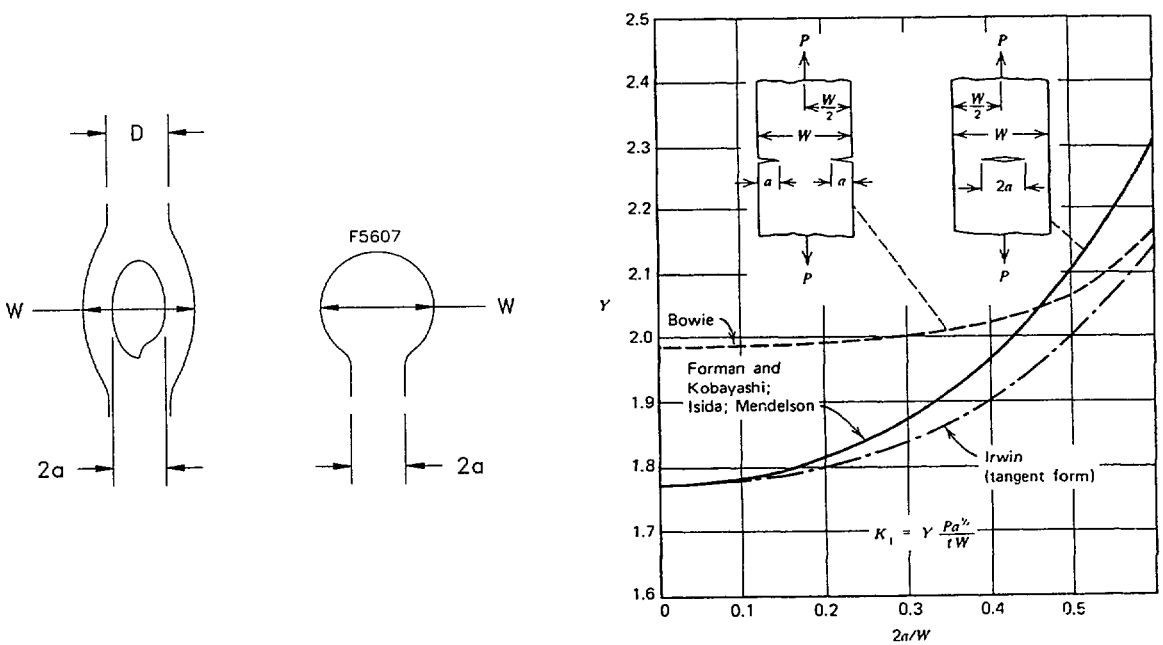

Figure K.3.6-27
Geometry Model #2: Central Crack in Finite Width Under Tension [3.20]

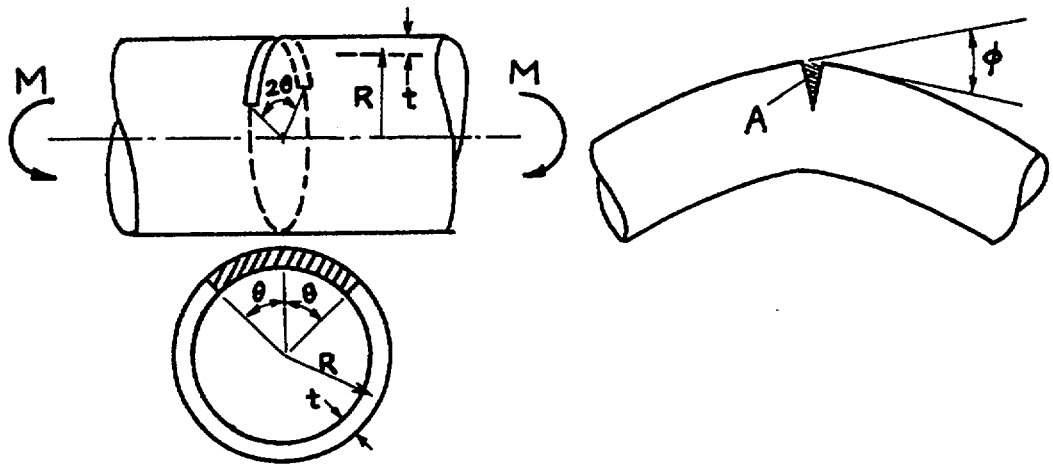

$$R/t \simeq 10 \qquad (\theta < 110^\circ)$$

$$\sigma = M/\left(\pi R^2 t\right)$$

$$K_I = \sigma\sqrt{\pi(R\theta)} \cdot F(\theta)$$

$$F(\theta) = 1 + 6.8\left(\frac{\theta}{\pi}\right)^{3/2} - 13.6\left(\frac{\theta}{\pi}\right)^{5/2} + 20.0\left(\frac{\theta}{\pi}\right)^{7/2}$$

Figure K.3.6-28
Geometry Model #3: Through-Wall Circumferential Crack in Cylinder Under Bending [3.21]

3.16 R. D. Blevins, "Formulas for Natural Frequency and Mode Shape," Van Nostrand Reinhold Co., New York, N.Y., (1979).

3.17 American Concrete Institute, Building Code Requirements for Reinforced Concrete (ACI 318-83) ACI, Detroit, MI (1983).

3.18 Manual of Steel Construction, 8th Edition, 1980.

3.19 *NUHOMS® MP197 Transport Packaging Safety Analysis Report, USNRC Docket No. 71-9302.*

3.20 W. F. Brown Jr. and J. E. Srawley, ASTM STP 410, 1966.

3.21 H. Tada, P. C. Paris, G. R. Irwing, "The Stress Analysis of Cracks Handbook," Third Edition, ASME Press.

3.22 R. Chun, M. Witte, M. Schwartz, "Dynamic Impact Effects on Spent Fuel Assemblies", Lawrence Livermore National Laboratory, Report No. UCID-21246, October, 1987.

3.23 H. M. Chung, A. M. Garde, and T. F. Kassner, "Mechanical Properties of Zircalloy Containing Oxygen," Light-Water-Reactor Safety Research Program. Quarterly Progress Report, July-September 1975, Argonne National Laboratory, 1975, ANL 75-72, pp. 51-88.

3.24 T. J. Walker and J. N. Kass, "Variation of Zircaloy Fracture Toughness in Irradiation," Zirconium in Nuclear Applications, ASTM STP 551, ASTM, 1974, pp. 328-354.

3.25 pc-CRACK™ for Windows, Version 3.1-98348, 1998, Structural Integrity Associates.

3.26 Spent Fuel Project Office, Interim Staff Guidance –1, "Damaged Fuel," November 2, 1998.

K.5 Shielding Evaluation

The radiation shielding evaluation for the Standardized NUHOMS® system (during loading, transfer and storage) for the 24P and 52B canisters is discussed in Sections 3.3.5, 7.0 and 8.0. The following radiation shielding evaluation discussion specifically addresses the dose rates due to design basis BWR fuel loaded in the NUHOMS®-61BT DCS. Source terms are calculated for a bounding BWR fuel assembly design, for four different burnup/enrichment combinations. The bounding gamma and the bounding neutron source terms are then combined in the radiation shielding models to conservatively calculate dose rates around the NUHOMS®-61BT system.

The design basis BWR fuel source terms are derived from the GE 7x7, GE2/3 assembly design as defined below. The GE 7x7 assembly is bounding because it has the highest initial heavy metal loading as compared to the 8x8, 9x9 and 10x10 fuel assemblies which are also authorized contents of the NUHOMS®-61BT DSC. In addition, the maximum Co59 content of each hardware region for each assembly type is used to determine the activation source for each assembly region. The burnup, minimum weight percentage (wt.%) enrichment and cooling time cases addressed are as follows:

- 27 GWd/MTU, 2.00 wt. % U-235, 5-year cooled
- 35 GWd/MTU, 2.65 wt. % U-235, 8-year cooled
- 37.2 GWd/MTU, 3.38 wt. % U-235, 6.5-year cooled
- 40 GWd/MTU, 3.4 wt. % U-235, 10-year cooled

These combinations form the basis for the NUHOMS®-61BT system fuel specifications. *Alternate burnup, minimum weight percentage (wt.%) initial enrichment and cooling time combinations are also specified in Table K.2-11. The design basis fuel source terms derived from burnup, minimum weight percentage (wt.%) initial enrichment and cooling time combinations listed above bound the source terms for the combinations listed in Table K.2-11.* The methodology, assumptions, and criteria used in this evaluation are summarized in the following subsections.

Table K.5-1 lists the assembly types considered in this application. Note that while the GE *and Exxon/ANF* fuel designs are specifically listed, storing assemblies of similar design by other manufacturers is also allowed provided an analysis is performed to demonstrate that the limiting features listed in Table K.5-1 bound the specific manufactures replacement fuel. The limiting features are burnup, initial enrichment, cooling time, fissile material type, number of fuel rods, number of water holes, and initial heavy metal.

K.5.2 Source Specification

Source terms are calculated with the ORIGEN2 [5.1] computer code. The following section derives the fuel assembly material weights. The ORIGEN2 results are used to develop source terms suitable for use in the shielding calculations.

The design-basis fuel assembly materials and masses for a "composite assembly" comprised of the maximum material for each fuel assembly zone are listed in Table K.5-5. The design basis uranium mass is 0.198 MTU. These masses are irradiated in the appropriate fuel assembly region in the ORIGEN2 models. All of the fuel channel materials are irradiated in the in-core region for conservatism.

The Co-59 contents of the fuel assembly materials used in the source term calculations are from [5.4]. The cobalt content of the fuel assembly has negligible impact on the site dose rates. The cobalt content in the end fittings impacts the dose during DSC cover plates welding operations. The total committed dose increase due to inadvertently loading fuel with end fittings with higher cobalt content is small, since the DSC cover plate welding operations are performed remotely by use of the automated welding machine. In addition, temporary shielding nay also be used to keep dose rates ALARA.

A sample input file for the 35 GWd/MTU case is listed and commented in detail in Section K.5.5.1. *Parameters that vary between this case and the others are also discussed in detail.*

The minimum cooling times listed in the fuel qualification Table K.2-11 for each burnup and wt.% initial enrichment are generated based on the decay heat limits and dose rate limits defined by the design basis fuel source terms. ORIGEN2 is used to calculate the minimum required cooling time as a function of assembly average initial enrichment and burnup for the entries in the fuel qualification table. The total decay heat includes the contribution from the fuel as well as the hardware in the entire assembly. The fuel qualification table also accounts for the decay heat from the fuel channel. Because the decay heat generally increases slightly with decreasing enrichment for a given burnup, it is conservative to assume that the required cooling time for a higher enrichment assembly is the same as that for a lower enrichment assembly with the same burnup.

The 1-D discrete ordinates code ANISN [5.10] is used to demonstrate that the bounding source terms used in the evaluation result in dose rates on the surface of the HSM and TC are greater than the dose rates due to fuels with burnup, wt.% enrichment and cooling time combinations given in the fuel qualification table. The dose rate due to the bounding source term on the HSM roof determines the limiting dose rate for the HSM. Similarly, the maximum calculated surface dose rates on the side of the TC using the bounding source term provide the cask dose rate limit. The ANISN models are essentially identical to the appropriate DORT models for the locations of interest. This approach described in detail in Section K.5.2.4, *is consistent with the method used to determine the fuel qualification tables for the Standardized NUHOMS®-24P and 52B canister.*

K.5.2.1 Gamma Source

K.5.2.1.1 Energy Group Mapping

The ORIGEN2 gamma ray source is given in an 18-group energy structure that must be converted to the CASK-81 energy group structure [5.2] that is used in the shielding calculations. To map the ORIGEN2 structure into the CASK-81 structure, the particles in each group are assumed to be evenly distributed in logarithmic energy space. This procedure is the same as that used in reference [5.3]. An example of the procedure used is given below.

Example:

ORIGEN2 groups "j" (.45 MeV - .7 MeV) and "k" (.3 MeV - .45 MeV)
CASK group 35 (.4 MeV - .6 MeV)

CASK group 35 contains the portion of ORIGEN2 group j between .45 and .6 MeV. It also contains the portion of group k between .4 and .45 MeV. The portion of ORIGEN2 group j in CASK group 35 is given by,

$$[\log(.6) - \log(.45)]/[\log(.7) - \log(.45)] = .651$$

The portion of ORIGEN2 group k in CASK group 35 is given by,

$$[\log(.45) - \log(.4)]/[\log(.45) - \log(.3)] = .290$$

The formula for mapping the ORIGEN2 spectrum into CASK group 35 would then have the form,

$$F35 = .651*j + .290*k$$

Where F35 is the source in CASK-81 group 35, j is the source in ORIGEN2 group j, and k is the source in ORIGEN2 group k. This procedure is repeated until all ORIGEN2 energy groups have been mapped into the CASK-81 group structure. The mapping functions are shown in Table K.5-6.

K.5.2.1.2 Gamma Source Calculations

Source terms for the 27 GWd/MTU case are calculated with ORIGEN2. For the 5-year post irradiation cooling time used as the design basis for this assembly group, the ORIGEN2 contributions from actinides, fission products, and activation products are summed for each assembly region. These results are shown in Table K.5-7. The results for the 35 GWd/MTU case at a cooling time of 8-years are shown in Table K.5-8. Similar results for the 37.2 GWd/MTU case at a cooling time of 6.5-years are shown in Table K.5-9. Table K.5-10 provides the results for the 40 GWd/MTU case at a cooling time of 10-years.

The bottom nozzle region is modeled as a cylinder 6.65 inches tall with a radius of 33.05 inches. The volume of this cylinder is, therefore, 3.74×10^5 cc. The in-core region is modeled as a cylinder 144 inches tall with a radius of 33.05 inches. The volume of this cylinder is, therefore, 8.10×10^6 cc. For an overall assembly height of 176.2 inches, the remaining height for the top/plenum region is 25.55 inches for a volume of 1.44×10^6 cc. As discussed in Section K.5.3 below, for the axial DORT models, the top and plenum regions are combined into one top/plenum region.

As stated in Section K.5.2.1.1, the ORIGEN2 results are mapped into the CASK-81 energy structure for use in the DORT models. The "whole" results from Table K.5-7 through Table K.5-10 are multiplied by 61 assemblies per DSC and divided by the 8.10×10^6 cc fuel region volume. The resulting volumetric sources are then mapped into the CASK-81 structure using the Table K.5-6 mapping functions. The resulting DORT sources for each case are shown in Table K.5-11.

The most important energy range for the gamma source is between ~0.8 and ~2.0 MeV with respect to the dose rate on the surfaces of the HSM and TC. Therefore as shown in Table K.5-11, the design basis gamma source term is for 27 GWd/MTU, 5-year cooled fuel because it has the largest number of particles in each group between 30 and 33, inclusive (0.8 – 2.0 MeV).

K.5.2.2 Neutron Source Term

The total neutron source is calculated with ORIGEN2. The total neutron sources as a function of cooling time is summarized in Table K.5-12. Neutron source terms are developed for the 27 GWd/MTU, 5-year; 35 GWd/MTU, 8-year; 37.2 GWd/MTU, 6.5-year; and 40 GWd/MTU, 10-year cases for use in the DORT models.

The design basis neutron source term is from the burnup and cooling time combination that produces the largest number of neutrons per second. Therefore, as shown in Table K.5-12, the design basis neutron source term is for 35 GWd/MTU, 8-year cooled fuel because it has the largest neutron source term.

The neutron sources used in the DORT models are shown in Table K.5-13. These sources are calculated by multiplying the ORIGEN2 results by 61 assemblies, dividing by the in-core volume, and then multiplying by the group fraction for each of the 22 CASK-81 neutron groups. Group fractions were taken directly from Table 7.2-2.

K.5.2.3 Axial Peaking

Axial peaking factors for both neutron and gamma sources in BWR fuel are calculated in reference [5.7]. The same peaking factors are used in the DORT analysis presented herein. Table K.5-14 lists the peaking factors for both neutron and gamma sources as a function of active fuel height. These factors are directly applied to each DORT interval in the fuel region.

The axial source term peaking factors from reference [5.7] are determined based on typical axial burnup distributions for BWR assemblies and based upon typical axial water density distribution that occurs during core operation. Using the base SAS2H/ORIGEN-S input for the 7x7 BWR,

selected as the design basis assembly for this application, neutron and gamma source terms are generated for axial zones as a function of burnup and moderator density. This estimates both the non-linear behavior of the neutron source with burnup and the core operating moderator density effects on the actinide isotopics (neutron source).

In-core data from an operating BWR facility forms the basis for the evaluation. The data provided the burnup and moderator density for 25 axial locations along the fuel assembly. Five assemblies located in different locations in the reactor core are utilized to generate a burnup (peaking factor) distribution for the assembly. Figure K.5-1 represents this distribution.

For water densities, the nodal data provided is examined and seven assemblies with the lowest densities are selected for evaluation. Of these seven, the assembly with the lowest densities is chosen. The water density data provided shows densities ranging from 0.7608 g/cc at the bottom node to 0.3607 at the top node.

The peaking factors and water densities for the 25 axial locations are collapsed into 12 axial zones and utilized in determining the source terms and axial profiles of the sources for the shielding evaluation. The top and bottom 10% of the assembly is divided into two zones each and the middle 80% divided into 8 equal zones. The peaking factors ranged from 0.2357 and 0.2410 at the bottom and top respectively, to a maximum of 1.20 just below the middle.

The water densities range from 0.3609 at the top zone to 0.7603 at the bottom.

The burnup and water density axial distribution data is utilized to prepare a 12 axial zone fuel assembly model. Twelve SAS2H calculations are performed for the design basis fuel with the power and water density being variables for each zone. The specific power input is the product of the nominal specific power, (5 MW) and the peaking factor. The water density is that value calculated for the zone as described above. Therefore, the fuel assembly is divided into 12 zones, with each zone having a unique gamma and neutron source term, specifically calculated for the burnup and water density in that zone. This data is presented in Table K.5-14.

K.5.2.4 *Response Functions for Alternate Nuclear Parameters*

To determine if fuel with a given burnup, wt.% enrichment and cooling time is bounded by the design basis shielding analysis, the total source term (including end fittings and fuel channel) for the assembly in question is used to compare the expected dose rate on the HSM roof and TC radial surface using a response function developed using the ANISN code. To calculate the total dose rate, multiply the total neutron source in n/sec/assembly by the neutron response function given in Table K.5-20 plus the group-wise source in γ/sec/assembly per group times the appropriate gamma group response function and sum the results. If the total dose rate is less than or equal to that determined for the design basis source term, then the minimum cooling time is adequate. If not, the cooling time is increased until the dose rate limits are met for both the HSM and TC. The maximum calculated dose rate, using the response function, is 29.60 mrem/hr on the HSM roof surface and 497.2 mrem/hr on the TC side surface.

The response functions are calculated using the ANISN models to perform the shielding evaluation for the fuel assembly parameters in the fuel qualification table. To generate the

neutron, including (n,γ), response function, ANISN runs for the HSM roof and TC are run with a starting neutron source of one neutron per second per assembly with a ^{244}Cm spectrum. The resulting calculated total dose rates on the HSM and TC surfaces are the appropriate response functions that are used to determine the HSM and TC surface dose rates by multiplying the response function times the total number of neutrons per second from a given assembly to determine the neutron and (n,γ) contribution to the total dose rate in mrem/hr. To generate the response function for each gamma group (CASK-81 group structure), ANISN runs are performed for the HSM and TC assuming one gamma per second per assembly in that group. The resulting calculated total dose rates on the HSM and TC surfaces are the appropriate response functions that are used to determine the HSM and TC surface dose rates by multiplying the response function times the total number of gammas per second from a given group from a given assembly to determine the gamma contribution to the total dose rates from that group in mrem/hr. By summing these results the total surface dose rates are calculated.

K.5.6 References

5.1 "ORIGEN2.1 – Isotope Generation and Depletion Code – Matrix Exponential Method," CCC-371, Oak Ridge National Laboratory, RSIC Computer Code Collection, August 1991.

5.2 CASK-81 - 22 Neutron, 18 Gamma-Ray Group, P3, Cross Sections for Shipping Cask Analysis," DLC-23, Oak Ridge National Laboratory, RSIC Data Library Collection, June 1987.

5.3 NUHOMS® MP187 Multi-Purpose Cask Transportation Safety Analysis Report," Revision 9, NRC Docket Number 71-9255.

5.4 Ludwig, S.B., and J.P. Renier, "Standard- and Extended-Burnup PWR and BWR Reactor Models for the ORIGEN2 Computer Code," ORNL/TM-11018 Oak Ridge National Laboratory, December 1989.

5.5 "Characteristics of Potential Repository Wastes," Department of Energy, Office of Civilian Radioactive Waste Management, DOE/RW-0184-R1, July, 1992.

5.6 LaMarsh, John R., Introduction to Nuclear Engineering, Second Edition, Addison-Wesley Publishing Company, Reading, Massachusetts, 1983.

5.7 "Final Safety Analysis Report for the TN-68 Dry Storage Cask," Revision 0, NRC Docket Number 72-1027.

5.8 "DORT-PC - Two-Dimensional Discrete Ordinates Transport Code System," CCC-532, Oak Ridge National Laboratory, RSIC Computer Code Collection, Version 2.10.1, October 1991.

5.9 Jenal, J. P., P. J. Erickson, W. A. Rhoades, D. B. Simpson, and M. L. Williams, "The Generation of a Computer Library for Discrete Ordinates Quadrature Sets," ORNL/TM-6023, Oak Ridge National Laboratory, October 1977.

5.10 *"ANISN-ORNL - One-Dimensional Discrete Ordinates Transport Code System with Anisotropic Scattering", CCC-254, Oak Ridge National Laboratory, RSIC Computer Code Collection, April 1991.*

Table K.5-1
Fuel Assembly Designs Considered

Manufacturer[1]	Array	Version	Active Fuel Length (in)	Number Fuel Rods per Assembly	Number Water Holes per Assembly	Fuel Loading (MTU)[2]
GE	7x7	GE1/GE2	144	49	NA	0.198
GE	7x7	GE3	144	49	NA	0.198
Exxon/ANF	*7x7*	*ENC III-A*		*49*	*0*	
Exxon/ANF	*7x7*	*ENC III[3]*		*48*	*1[4]*	
Exxon/ANF	*8x8*	*ENC Va & Vb*		*60*	*4[4]*	
GE	8x8	GE4	146	63	1	0.188
GE	8x8	GE5	150	62	2	0.186
GE	8x8	GE-Pres	150	62	2	0.186
GE	8x8	GE-Barrier	150	62	2	0.186
GE	8x8	GE8 Type I	150	62	2	0.186
GE	8x8	GE8 Type II	150	60	1	0.183
GE	8x8	GE9	150	60	1	0.184
GE	8x8	GE10	150	60	1	0.184
GE	9x9	GE11	146-Full 90-Partial	66-Full 8-Partial	2	0.177
GE	9x9	GE13	146-Full 90-Partial	66-Full 8-Partial	2	0.177
GE	10x10	GE12	150-Full 93-Partial	78-Full 14-Partial	2	0.187

(1) Or equivalent reload fuel that is enveloped by the fuel assembly design characteristics listed in this table.

(2) Fissile Material is limited to UO2.

(3) Includes ENC III-E and ENC III-F.

(4) Solid Zirc Rod(s)

K.6.2 Package Fuel Loading

The NUHOMS®-61BT DSC is capable of transferring and storing standard BWR fuel assemblies with or without fuel channels and as intact or damaged fuel assemblies. The fuel assemblies considered as authorized contents are listed in Table K.6-2.

Table K.6-3 lists the fuel parameters for the standard BWR fuel assemblies. The design basis fuel chosen for the NUHOMS®-61BT system criticality analysis is the GE 10x10 fuel assembly. The GE 10x10 assembly is used because, as demonstrated in Section K.6.4, it is the most reactive assembly of those authorized to be stored in the NUHOMS®-61BT DSC.

Table K.6-2
Authorized Contents for NUHOMS®-61BT System

Assembly Type (1)	Array
Intact Fuel	
General Electric 7x7 /GE1	*7x7*
General Electric 7x7 /GE2	7x7
General Electric 7x7 /GE3	7x7
Exxon/ANF 7x7 /ENC III-A	*7x7*
Exxon/ANF 7x7 /ENC III(2)	*7x7*
General Electric 8x8 /GE4	8x8
General Electric 8x8 /GE5	8x8
General Electric 8x8 /GE-Pres	8x8
General Electric 8x8 /GE-Barrier	8x8
General Electric 8x8 /GE8 Type I	8x8
General Electric 8x8 /GE8 Type II	8x8
General Electric 8x8 /GE9	8x8
General Electric 8x8 /GE10	8x8
Exxon/ANF 8x8 /ENC Va and Vb	*8x8*
General Electric 9x9 /GE11	9x9
General Electric 9x9 /GE13	9x9
General Electric 10x10 /GE12	10x10
Damaged Fuel with up to 7 damaged rods per assembly	
General Electric 7x7 /GE1	*7x7*
General Electric 7x7 /GE2	7x7
General Electric 7x7 /GE3	7x7
Exxon/ANF 7x7 /ENC III-A	*7x7*
Exxon/ANF 7x7 /ENC III(2)	*7x7*
General Electric 8x8 /GE4	8x8
General Electric 8x8 /GE5	8x8
General Electric 8x8 /GE-Pres	8x8
General Electric 8x8 /GE-Barrier	8x8
General Electric 8x8 /GE8 Type I	8x8
General Electric 8x8 /GE8 Type II	8x8
General Electric 8x8 /GE9	8x8
General Electric 8x8 /GE10	8x8
Exxon/ANF 8x8 /ENC Va and Vb	*8x8*

(1) Reload fuel from other manufactures with the same parameters as those listed in Table K.6-3 are also considered as authorized contents.

(2) Includes ENC III-E and ENC III-F.

Table K.6-3
Parameters for BWR Assemblies

Manufacturer[1]	Array	Version	Active Fuel Length (in)	Number Fuel Rods per Assembly	Pitch (in)	Fuel Pellet OD (in)	Clad Thickness (in)	Clad OD (in)	Water Rod OD (in)	Water Rod ID (in)
GE	*7x7*	*GE1*	*144*	*49*	*0.738*	*0.488*	0.0355	0.570	NA	NA
GE	7x7	GE2	144	49	0.738	0.487	0.032	0.563	NA	NA
GE	7x7	GE3	144	49	0.738	0.487	0.032	0.563	NA	NA
Exxon/ANF	*7x7*	*ENC III-A*	*144*	*49*	*0.738*	*(2)*	0.0355[4]	0.570	NA	NA
Exxon/ANF	*7x7*	*ENC III*	*144*	*48*	*0.738*	*(3)*	0.0355[4]	0.570	0.572[5]	NA
GE	8x8	GE4	146	63	0.640	0.416	0.034	0.493	0.591	0.531
GE	8x8	GE5	150	62	0.640	0.410	0.032	0.483	0.591	0.531
GE	8x8	GE-Pres	150	62	0.640	0.410	0.032	0.483	0.591	0.531
GE	8x8	GE-Barrier	150	62	0.640	0.410	0.032	0.483	0.591	0.531
GE	8x8	GE8 Type I	150	62	0.640	0.410	0.032	0.483	0.591	0.531
GE	8x8	GE8 Type II	150	60	0.640	0.411	0.032	0.483	2@0.0591 2@0.0483	2@0.531 2@0.4312
GE	8x8	GE9	150	60	0.640	0.411	0.032	0.483	1.34	1.26
GE	8x8	GE10	150	60	0.640	0.411	0.032	0.483	1.34	1.26
Exxon/ANF	*8x8*	*ENC Va and Vb*	*144*	*60*	*0.642*	*0.4195*	0.036	0.5015	0.5015[5]	NA
GE	9x9	GE11	146-Full 90-Partial	66-Full 8-Partial	0.566	0.376	0.028	0.440	0.98	0.92
GE	9x9	GE13	146-Full 90-Partial	66-Full 8-Partial	0.566	0.376	0.028	0.440	0.98	0.92
GE	10x10	GE12	150-Full 93-Partial	78-Full 14-Partial	0.510	0.345	0.026	0.404	0.98	0.92

(1) Reload fuel from other manufacturers with these parameters are also acceptable.
(2) Variable Fuel Pellet OD – evaluated from 0.468 to 0.488 in same assembly
(3) Variable Fuel Pellet OD – evaluated from 0.468 to 0.491 in same assembly.
(4) Variable Fuel Clad Thickness from 0.0355 to 0.0455 in – Thinnest clad thickness listed and conservatively used in the analysis.
(5) *Solid Zirc rod(s)*

Table K.6-6
Most Reactive Fuel Type

Manufacturer	Array	Version	k_{KENO}	1σ	k_{eff}
GE	*7x7*	*GE1*	*0.8981*	*0.0012*	*0.9005*
GE	*7x7 0.120 channel*	*GE1*	*0.8993*	*0.0011*	*0.9015*
GE	*7x7 0.080 channel*	*GE1*	*0.8971*	*0.0015*	*0.9001*
GE	*7x7 0.065 channel*	*GE1*	*0.8968*	*0.0012*	*0.8992*
GE	7x7	GE2, GE3	0.9037	0.0012	0.9061
GE	7x7 0.120 channel	GE2, GE3	0.9033	0.0015	0.9063
GE	7x7 0.080 channel	GE2, GE3	0.9028	0.0012	0.9052
GE	7x7 0.065 channel	GE2, GE3	0.9043	0.0013	0.9069
Exxon/ANF	*7x7*	*ENC III-A(1)*	*0.8983*	*0.0011*	*0.9005*
Exxon/ANF	*7x7 0.120 channel*	*ENC III-A(1)*	*0.8996*	*0.0013*	*0.9022*
Exxon/ANF	*7x7 0.080 channel*	*ENC III-A(1)*	*0.9007*	*0.0012*	*0.9031*
Exxon/ANF	*7x7 0.065 channel*	*ENC III-A(1)*	*0.8985*	*0.0011*	*0.9007*
Exxon/ANF	*7x7*	*ENC III(2)*	*0.8962*	*0.0013*	*0.8988*
Exxon/ANF	*7x7 0.120 channel*	*ENC III(2)*	*0.8971*	*0.0013*	*0.8997*
Exxon/ANF	*7x7 0.080 channel*	*ENC III(2)*	*0.8956*	*0.0012*	*0.8980*
Exxon/ANF	*7x7 0.065 channel*	*ENC III(2)*	*0.8967*	*0.0011*	*0.8989*
Exxon/ANF	*7x7*	*ENC III(3)*	*0.8976*	*0.0014*	*0.9004*
Exxon/ANF	*7x7 0.120 channel*	*ENC III(3)*	*0.8959*	*0.0011*	*0.8981*
Exxon/ANF	*7x7 0.080 channel*	*ENC III(3)*	*0.8925*	*0.0014*	*0.8953*
Exxon/ANF	*7x7 0.065 channel*	*ENC III(3)*	*0.8958*	*0.0013*	*0.8984*
GE	8x8	GE4	0.8951	0.0013	0.8977
GE	8x8 0.120 channel	GE4	0.8927	0.0013	0.8953
GE	8x8 0.080 channel	GE4	0.8930	0.0013	0.8956
GE	8x8 0.065 channel	GE4	0.8940	0.0012	0.8964
GE	8x8	GE5 GE-Pres GE-Barrier GE8 Type I	0.9009	0.0011	0.9031
GE	8x8 0.120 channel	GE5	0.9015	0.0012	0.9039
GE	8x8 0.080 channel	GE5	0.9027	0.0013	0.9053
GE	8x8 0.065 channel	GE5	0.9012	0.0011	0.9034
GE	8x8	GE8 Type II	0.9020	0.0012	0.9044
GE	8x8 0.120 channel	GE8 Type II	0.9054	0.0014	0.9082
GE	8x8 0.080 channel	GE8 Type II	0.9043	0.0014	0.9071
GE	8x8 0.065 channel	GE8 Type II	0.9023	0.0013	0.9049
GE	8x8	GE9, GE10	0.9043	0.0013	0.9069
GE	8x8 0.120 channel	GE9, GE10	0.9062	0.0013	0.9088
GE	8x8 0.080 channel	GE9, GE10	0.9054	0.0011	0.9076
GE	8x8 0.065 channel	GE9, GE10	0.9052	0.0014	0.9080
Exxon/ANF	*8x8*	*ENC Va and Vb*	*0.8851*	*0.0011*	*0.8873*
Exxon/ANF	*8x8 0.120 channel*	*ENC Va and Vb*	*0.8827*	*0.0011*	*0.8849*
Exxon/ANF	*8x8 0.080 channel*	*ENC Va and Vb*	*0.8831*	*0.0012*	*0.8855*
Exxon/ANF	*8x8 0.065 channel*	*ENC Va and Vb*	*0.8821*	*0.0014*	*0.8849*
GE	9x9	GE11, GE13	0.9042	0.0014	0.9070
GE	9x9 0.120 channel	GE11, GE13	0.9025	0.0014	0.9053
GE	9x9 0.080 channel	GE11, GE13	0.9066	0.0012	0.9090
GE	9x9 0.065 channel	GE11, GE13	0.9040	0.0013	0.9066

Table K.6-6
Most Reactive Fuel Type
(Continued)

Manufacturer	Array	Version	k_{KENO}	1σ	k_{eff}
GE	10x10	GE12	0.9095	0.0013	0.9121
GE	10x10 0.120 channel	GE12	0.9094	0.0010	0.9114
GE	10x10 0.080 channel	GE12	0.9092	0.0013	0.9118
GE	10x10 0.065 channel	GE12	0.9076	0.0011	0.9098
GE	7x7 w/variable enrichment	GE2, GE3	0.8947	0.0012	0.8971
GE	8x8 w/variable enrichment	GE5	0.8951	0.0011	0.8973
GE	8x8 w/variable enrichment	GE9	0.9008	0.0013	0.9034

(1) Small Fuel Pellet OD (Note Large Pellet OD identical to GE1 analysis)
(2) Small Fuel Pellet OD
(3) Large Fuel Pellet OD

1	1	1	1	1	1	1
1	1	1	1	1	1	1
1	1	1	1	1	1	1
1	1	1	1	1	1	1
1	1	1	1	1	1	1
1	1	1	1	1	1	1
1	1	1	1	1	1	1

GE1, GE2 and E3A
7x7 Array
1 = Fuel Rod

1	1	1	1	1	1	1
1	1	1	1	1	1	1
1	1	1	1	1	1	1
1	1	1	66	1	1	1
1	1	1	1	1	1	1
1	1	1	1	1	1	1
1	1	1	1	1	1	1

E3s and E31 - 7x7 Array
1 = Fuel Rod
66 = Zirc Rod

1	1	1	1	1	1	1	1
1	1	1	1	1	1	1	1
1	1	1	1	1	1	1	1
1	1	1	66	1	1	1	1
1	1	1	1	1	1	1	1
1	1	1	1	1	1	1	1
1	1	1	1	1	1	1	1
1	1	1	1	1	1	1	1

GE4 - 8x8 Array
1 = Fuel Rod
66 = Water Rod

1	1	1	1	1	1	1	1
1	1	1	1	1	1	1	1
1	1	1	1	1	1	1	1
1	1	1	66	1	1	1	1
1	1	1	1	66	1	1	1
1	1	1	1	1	1	1	1
1	1	1	1	1	1	1	1
1	1	1	1	1	1	1	1

GE5 - 8x8 Array
1 = Fuel Rod
66 = Water Rod

1	1	1	1	1	1	1	1
1	1	1	1	1	1	1	1
1	1	1	1	1	1	1	1
1	1	1	67	66	1	1	1
1	1	1	66	67	1	1	1
1	1	1	1	1	1	1	1
1	1	1	1	1	1	1	1
1	1	1	1	1	1	1	1

GE8 - 8x8 Array
1 = Fuel Rod
66 = Water Rod 1
67 = Water Rod 2

1	1	1	1	1	1	1	1
1	1	1	1	1	1	1	1
1	1	1	1	1	1	1	1
1	1	1	66	66	1	1	1
1	1	1	66	66	1	1	1
1	1	1	1	1	1	1	1
1	1	1	1	1	1	1	1
1	1	1	1	1	1	1	1

GE9 and EV - 8x8 Array
1 = Fuel Rod
66 = Water Hole (GE9)
66 = Zirc Rod (EV)

1	1	1	1	1	1	1	1	1
1	1	1	1	1	1	1	1	1
1	1	1	1	1	1	1	1	1
1	1	1	66	66	1	1	1	1
1	1	1	66	66	66	1	1	1
1	1	1	1	66	66	1	1	1
1	1	1	1	1	1	1	1	1
1	1	1	1	1	1	1	1	1
1	1	1	1	1	1	1	1	1

GE11 - 9x9 Array
1 = Fuel Rod
66 = Water Hole

1	1	1	1	1	1	1	1	1	1
1	1	1	1	1	1	1	1	1	1
1	1	1	1	1	1	1	1	1	1
1	1	1	66	66	1	1	1	1	1
1	1	1	66	66	1	1	1	1	1
1	1	1	1	1	66	66	1	1	1
1	1	1	1	1	66	66	1	1	1
1	1	1	1	1	1	1	1	1	1
1	1	1	1	1	1	1	1	1	1

GE12 - 10x10 Array
1 = Fuel Rod
66 = Water Hole

Figure K.6-4
Fuel Assembly Layouts

AFFIDAVIT PURSUANT TO 10 CFR 2.790

Transnuclear, Inc.)
State of New York) SS.
County of Westchester)

I, Ian Hunter, depose and say that I am Vice President, Engineering, of Transnuclear, Inc., duly authorized to make this affidavit, and have reviewed or caused to have reviewed the information which is identified as proprietary and referenced in the paragraph immediately below. I am submitting this affidavit in conformance with the provisions of 10 CFR 2.790 of the Commission's regulations for withholding this information.

The information for which proprietary treatment is sought is contained in the drawing included in Enclosure 2, Section K.1.5 of Attachment C of this submittal and as listed below:

- Drawing NUH-61B-1066-SAR Revision 2 (Proprietary Version).

This section of the document has been appropriately designated as proprietary.

I have personal knowledge of the criteria and procedures utilized by Transnuclear, Inc. in designating information as a trade secret, privileged or as confidential commercial or financial information.

Pursuant to the provisions of paragraph (b) (4) of Section 2.790 of the Commission's regulations, the following is furnished for consideration by the Commission in determining whether the information sought to be withheld from public disclosure, included in the above referenced document, should be withheld.

1) The information sought to be withheld from public disclosure is design drawings of NUHOMS® Cask, which is owned and has been held in confidence by Transnuclear, Inc.

2) The information is of a type customarily held in confidence by Transnuclear, Inc. and not customarily disclosed to the public. Transnuclear Inc. has a rational basis for determining the types of information customarily held in confidence by it.

3) The information is being transmitted to the Commission in confidence under the provisions of 10 CFR 2.790 with the understanding that it is to be received in confidence by the Commission.

4) The information, to the best of my knowledge and belief, is not available in public sources, and any disclosure to third parties has been made pursuant to regulatory provisions or proprietary agreements which provide for maintenance of the information in confidence.

5) Public disclosure of the information is likely to cause substantial harm to the competitive position of Transnuclear, Inc. because:

   a) A similar product is manufactured and sold by competitors of Transnuclear, Inc.

   b) Development of this information by Transnuclear, Inc. required thousands of man-hours and hundreds of thousands of dollars. To the best of my knowledge and belief, a competitor would have to undergo similar expense in generating equivalent information.

c) In order to acquire such information, a competitor would also require considerable time and inconvenience related to the development of a design and analysis of a dry spent fuel storage system.

d) The information required significant effort and expense to obtain the licensing approvals necessary for application of the information. Avoidance of this expense would decrease a competitor's cost in applying the information and marketing the product to which the information is applicable.

e) The information consists of description of the design and analysis of a dry spent fuel storage and transportation system, the application of which provides a competitive economic advantage. The availability of such information to competitors would enable them to modify their product to better compete with Transnuclear, Inc., take marketing or other actions to improve their product's position or impair the position of Transnuclear, Inc.'s product, and avoid developing similar data and analyses in support of their processes, methods or apparatus.

f) In pricing Transnuclear, Inc.'s products and services, significant research, development, engineering, analytical, licensing, quality assurance and other costs and expenses must be included. The ability of Transnuclear, Inc.'s competitors to utilize such information without similar expenditure of resources may enable them to sell at prices reflecting significantly lower costs.

Further the deponent sayeth not.

Ian Hunter
Vice President, Engineering
Transnuclear, Inc.

Subscribed and sworn to me before this 29th day of March, 2002, by Ian Hunter.

Notary Public

FREDRICK P. SWINT
Notary Public, State of New York
No. 01SW6040195
Qualified in Westchester County
Commission Expires 4-17-2002

TRANSNUCLEAR, INC.
FOUR SKYLINE DRIVE, HAWTHORNE, NEW YORK 10532
Phone: 914-347-2345 • Fax: 914-347-2346

March 29, 2002
NUH03-02-31

Ms. Mary Jane Ross-Lee
Spent Fuel Project Office, NMSS
U. S. Nuclear Regulatory Commission
11555 Rockville Pike M/S 0-6-F-18
Rockville, MD 20852

Subject: 10 CFR 2.790 Affidavit for Reference Application

Reference: Application for Amendment No.7 of NUHOMS® Certificate of Compliance No. 1004 for Dry Spent Fuel Storage Casks, Revision 0

Dear Ms. Ross-Lee:

Enclosed herewith is an original version of the 10CFR 2.790 affidavit which supports the request to withhold proprietary information included with the reference Application for Amendment No. 7 of NUHOMS® Certificate of Compliance No. 1004. Please replace the affidavit copy submitted in the reference application with this original.

Should you or your staff require additional information to support review of this application, please do not hesitate to contact me at 914-347-3021 or Mr. U. B. Chopra at 510-744-6053.

Sincerely,

Ian Hunter

Ian Hunter
Vice President, Engineering

Docket 72-1004
Enclosure: 1. As stated.

AFFIDAVIT PURSUANT TO 10 CFR 2.790

Transnuclear, Inc.)
State of New York) SS.
County of Westchester)

I, Ian Hunter, depose and say that I am Vice President, Engineering, of Transnuclear, Inc., duly authorized to make this affidavit, and have reviewed or caused to have reviewed the information which is identified as proprietary and referenced in the paragraph immediately below. I am submitting this affidavit in conformance with the provisions of 10 CFR 2.790 of the Commission's regulations for withholding this information.

The information for which proprietary treatment is sought is contained in the drawing included in Enclosure 2, Section K.1.5 of Attachment C of this submittal and as listed below:

- Drawing NUH-61B-1066-SAR Revision 2 (Proprietary Version).

This section of the document has been appropriately designated as proprietary.

I have personal knowledge of the criteria and procedures utilized by Transnuclear, Inc. in designating information as a trade secret, privileged or as confidential commercial or financial information.

Pursuant to the provisions of paragraph (b) (4) of Section 2.790 of the Commission's regulations, the following is furnished for consideration by the Commission in determining whether the information sought to be withheld from public disclosure, included in the above referenced document, should be withheld.

1) The information sought to be withheld from public disclosure is design drawings of NUHOMS® Cask, which is owned and has been held in confidence by Transnuclear, Inc.

2) The information is of a type customarily held in confidence by Transnuclear, Inc. and not customarily disclosed to the public. Transnuclear Inc. has a rational basis for determining the types of information customarily held in confidence by it.

3) The information is being transmitted to the Commission in confidence under the provisions of 10 CFR 2.790 with the understanding that it is to be received in confidence by the Commission.

4) The information, to the best of my knowledge and belief, is not available in public sources, and any disclosure to third parties has been made pursuant to regulatory provisions or proprietary agreements which provide for maintenance of the information in confidence.

5) Public disclosure of the information is likely to cause substantial harm to the competitive position of Transnuclear, Inc. because:

   a) A similar product is manufactured and sold by competitors of Transnuclear, Inc.

   b) Development of this information by Transnuclear, Inc. required thousands of man-hours and hundreds of thousands of dollars. To the best of my knowledge and belief, a competitor would have to undergo similar expense in generating equivalent information.

c) In order to acquire such information, a competitor would also require considerable time and inconvenience related to the development of a design and analysis of a dry spent fuel storage system.

d) The information required significant effort and expense to obtain the licensing approvals necessary for application of the information. Avoidance of this expense would decrease a competitor's cost in applying the information and marketing the product to which the information is applicable.

e) The information consists of description of the design and analysis of a dry spent fuel storage and transportation system, the application of which provides a competitive economic advantage. The availability of such information to competitors would enable them to modify their product to better compete with Transnuclear, Inc., take marketing or other actions to improve their product's position or impair the position of Transnuclear, Inc.'s product, and avoid developing similar data and analyses in support of their processes, methods or apparatus.

f) In pricing Transnuclear, Inc.'s products and services, significant research, development, engineering, analytical, licensing, quality assurance and other costs and expenses must be included. The ability of Transnuclear, Inc.'s competitors to utilize such information without similar expenditure of resources may enable them to sell at prices reflecting significantly lower costs.

Further the deponent sayeth not.

Ian Hunter
Vice President, Engineering
Transnuclear, Inc.

Subscribed and sworn to me before this 29th day of March, 2002, by Ian Hunter.

Notary Public

FREDRICK P. SWINT
Notary Public, State of New York
No. 01SW6040195
Qualified in Westchester County
Commission Expires 4-17-2002