DRAFT SUBMITTAL

H. B. ROBINSON NUCLEAR PLANT
EXAM NO. 50-261/2000-301

MAY 3, 2000

DRAFT RO WRITTEN EXAM

Question: 1

Given the following conditions:

- The plant is operating at 100% power.
- An electrical fault occurs which results in a loss of power to Instrument Bus 3.

Which ONE (1) of the following describes the impact that the loss of Instrument Bus 3 has on the automatic operation of the Engineered Safeguards Features (ESF) Actuation System?

	TRAIN 'A' ESF LOADS	**TRAIN 'B' ESF LOADS**
a.	Capable of being automatically started by sequencer	Capable of being automatically started by sequencer
b.	Capable of being automatically started by sequencer	**NOT** capable of being automatically started by sequencer
c.	**NOT** capable of being automatically started by sequencer	Capable of being automatically started by sequencer
d.	**NOT** capable of being automatically started by sequencer	**NOT** capable of being automatically started by sequencer

Answer:

b.	Capable of being automatically started by sequencer	**NOT** capable of being automatically started by sequencer

QUESTION NUMBER: 1
TIER/GROUP: 2/1

K/A: 013K2.01
Knowledge of bus power supplies to the ESFAS/safeguards equipment control

K/A IMPORTANCE: RO 3.6

10CFR55 CONTENT: 55.41(b) RO 7

OBJECTIVE: ESF-09
Explain the normal operation of the ESFAS control systems. Include function, instrumentation, interlocks, annunciators, and setpoints.

REFERENCES: AOP-024

SOURCE: New Significantly Modified Modified/Direct **X**

Bank Number ESF-09 15 **NRC Exam 97-1**

JUSTIFICATION:

a. Plausible since there are several other possible sources of control power to the ESFAS system (8 instrument busses, 2 DC busses). Instrument Bus 3 supplies power to Train "B" ESFAS.

b. **CORRECT** Instrument Bus 3 supplies Train "B" ESF sequencer. Without power, output relays are not capable of energizing to perform function.

c. Plausible since Train "A" ESF sequencers are powered from a 120 VAC instrument bus. Instrument Bus 7A supplies Train "A" ESF sequencers.

d. Plausible since Train "A" ESF sequencers are powered from a 120 VAC instrument bus and Train "B" ESF sequencers are powered from instrument bus 3. Instrument Bus 7A supplies Train "A" ESF sequencers

DIFFICULTY:
Comprehensive/Analysis **X** Memory Rating 3

Analysis of effect of loss of power to ESF sequencer and knowledge of power supplies to sequencers.

REFERENCES SUPPLIED: NONE

CONTINUOUS USE

ATTACHMENT 4

EXTENDED LOSS OF INSTRUMENT BUS 3 (AND 8)

(Page 1 of 3)

NOTE

The following control functions/indications will be lost until Instrument Bus 3 and 8 are restored:

PT-446, Turbine 1st Stage Pressure
FCV-114A, PW to Blender (locked up full open)
FRV A, B, & C Automatic Control
FRV Bypass Valve A (FCV-479)
PCV-455B, Spray Valve (Indication only)
Safeguards Train B Sequencer
FCV-1425 (AFW PUMP B inoperable)
Charging Pump C Controller, SC-153A (locks up)
ICCM - Channel II
Steam Dump Steam Pressure Control
RMS Racks 2 & 3 and R-32B
PT-138 Excess Letdown Pressure Indication
S/G A PORV Control
TCV-1447 and TCV-1448 Exhaust Hood Spray Valves
Solenoids for R-11/12 Skid (fail closed)

1. Place Turbine First Stage Pressure Selector Switch to PT-447 position.

NOTE

In the event that the Plant experiences a trip due to difficulty in maintaining all S/Gs in manual level control, feed flow to the S/Gs will be accomplished via the AFW Pumps OR FRV Bypass Valves.

2. Continue to operate FRVs A, B, & C in MAN.

3. Contact Operations Staff for availability of a dedicated FRV watch.

Question: 2

Given the following conditions:

- A Reactor startup is in progress.
- Service Water pressure in **BOTH** headers decreases and stabilizes at 25 psig.

Assuming **NO** operator action, cooling flow is lost to the ...

a. Component Cooling Water Heat Exchangers.

b. Turbine Oil Coolers.

c. Instrument Air Compressors 'A' and 'B'.

d. Steam Driven Auxiliary Feedwater Pump.

Answer:

b. Turbine Oil Coolers.

QUESTION NUMBER: 2
TIER/GROUP: 2/3

K/A: 076A1.02
Ability to predict and/or monitor changes in parameters (to prevent exceeding design limits) associated with operating the SWS controls including: Reactor and turbine building closed cooling water temperatures.

K/A IMPORTANCE: RO 2.6

10CFR55 CONTENT: 55.41(b) RO 4

OBJECTIVE: SW-09
Explain the normal operation of the SERVICE WATER control systems. Include function, instrumentation, interlocks, annunciators, and setpoints.

REFERENCES: SD-004

SOURCE: New Significantly Modified **X** Modified/Direct

Bank Number SW-09 003

JUSTIFICATION:

a. Plausible since portions of the SW system isolate on low pressure. CCW HXs are supplied by headers which do not isolate.

b. **CORRECT** SW isolates to the Turbine Building in the event pressure drops below 31 psig for more than 60 seconds. Turbine Oil Coolers are cooled by Turbine Building header.

c. Plausible since portions of the SW system isolate on low pressure. IA Compressors are supplied by headers which do not isolate.

d. Plausible since portions of the SW system isolate on low pressure. Steam driven AFW pump is supplied emergency makeup by SW, but is no longer supplied cooling water by SW.

DIFFICULTY:
Comprehensive/Analysis Memory **X** Rating 2

Knowledge of the effect of low SW pressure and automatic actions which occur to restore pressure.

REFERENCES SUPPLIED: NONE

PSA RELATED

SERVICE WATER SYSTEM LOADS

SW-FIGURE 2

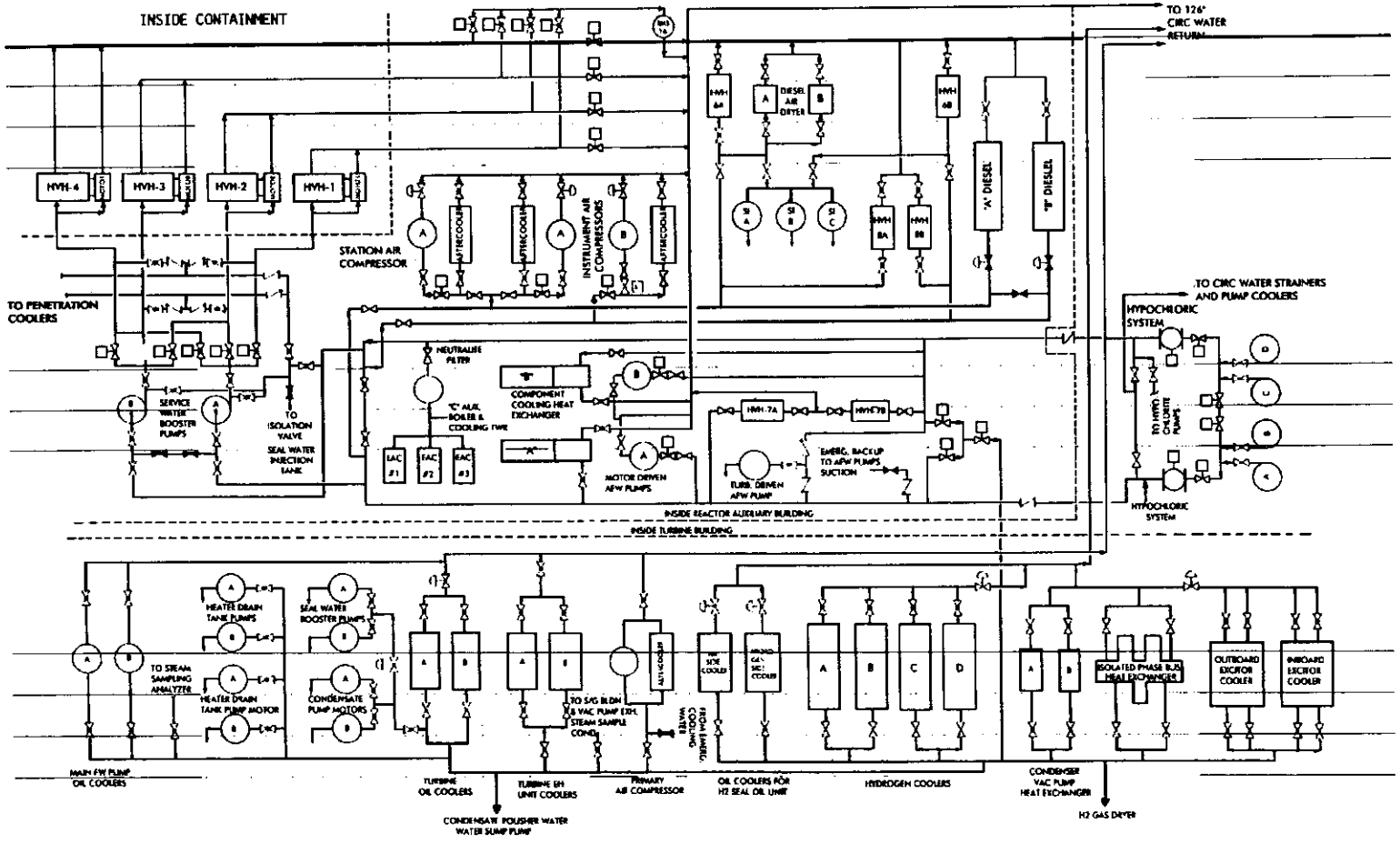

swf02

INFORMATION ONLY

TURBINE BUILDING SW ISOLATION LOGIC (SIMPLIFIED)

SW-FIGURE-4

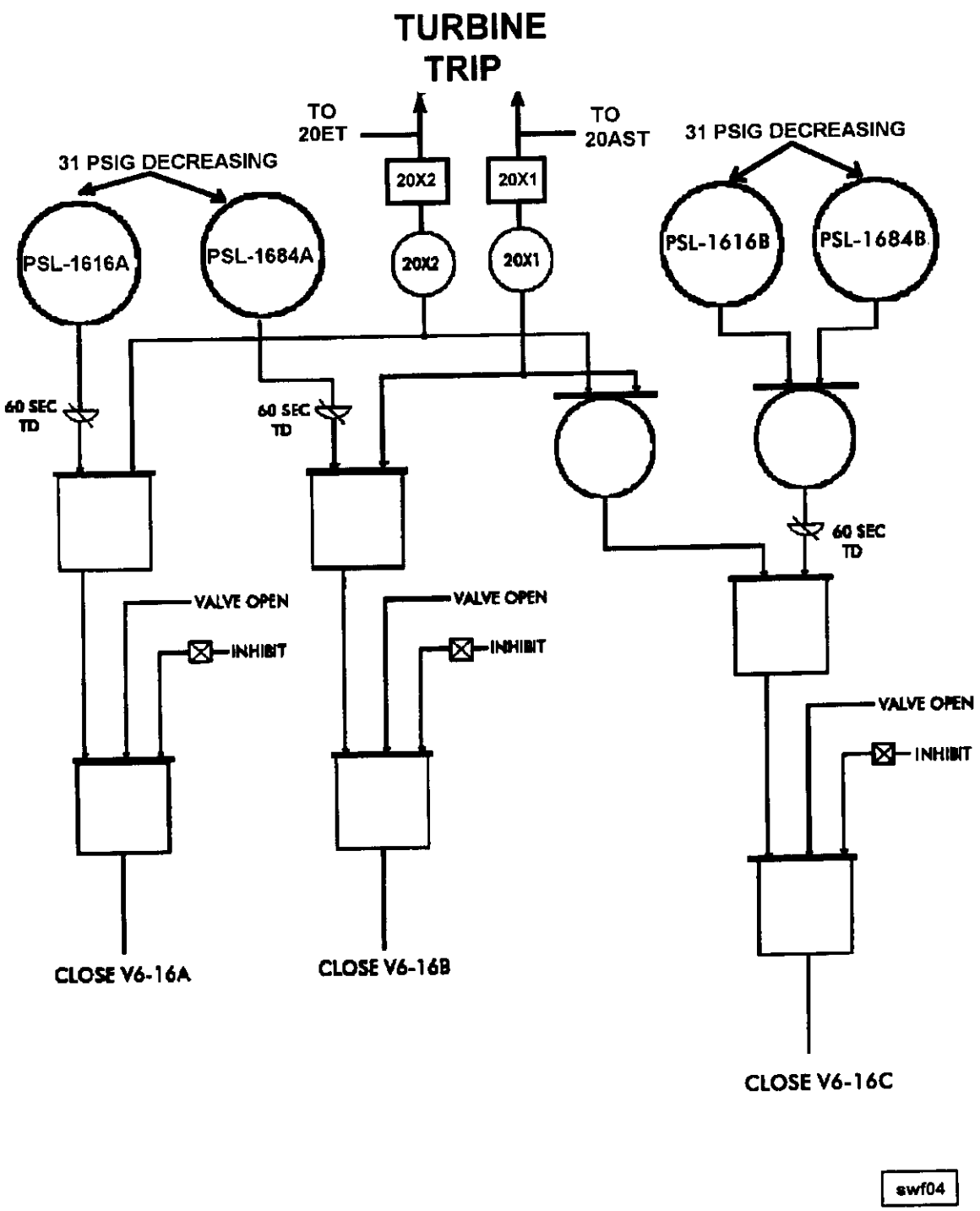

INFORMATION ONLY

3.8 SW Relief Valves

Valve Number	Location	Setpoint
SW-549	HVH-1 Return Line	125 psig
SW-548	HVH-2 Return Line	125 psig
SW-547	HVH-3 Return Line	125 psig
SW-546	HVH-4 Return Line	125 psig

4.0 INSTRUMENTATION

4.1 Local Pressure Indications

Local pressure indicators are located throughout the system on the various components. Each pump has a local discharge pressure gauge.

4.2 Local Temperature Indications

Most components served by SW have local temperature indicators on the outlet line to aid in determining the performance of the component and for monitoring SW outlet temperature.

4.3 Remote Pressure Indications

SW System pressure indication is provided on the RTGB by PI-1616 for north header and PI-1684 for the south header. These gauges read approximately three psig less than SW Pump discharge pressure.

4.4 Instrument Setpoints

Number	Function	Setpoint
PSL-1602A	SW Booster Pump A Suction Trip	12 psig decreasing after 10 sec time delay 30 psig increasing reset
PSL-1602B	SW Booster Pump B Suction Trip	12 psig decreasing after 10 sec time delay 30 psig increasing reset
PSL-1616A/B & PSL-1684A/B	SW to Turbine Bldg Isolation (Figure 4)	31 psig after 60 sec time delay and turbine trip
LS-1652A/B	SW Strainer Pits Water Level	Hi - 1 ft above floor Hi-Hi - 3 1/2 ft above floor

INFORMATION USE ONLY

are allowed.

2) IF the pump has been started 3 times in the last 45 minutes AND neither of the last 2 starts was a run of at least 20 minutes, THEN no further starts are allowed for 45 minutes.
   - Any run in the previous 45 minutes is considered one of the 3 allowed starts.

3) IF the pump was run at least 20 minutes and stopped, THEN 2 consecutive starts are allowed with no waiting period.

4) Maximum of 6 starts per day.

3.2 SW North and South Header

Normally three SW Pumps are running supplying full system needs through two headers, each capable of passing full system flow. Four valves are installed to cross connect SW Pump discharge (V6-12B & C) and to isolate the North or South SW Header (V6-12A & D). These valves are normally open and are controlled at the RTGB. Since the operation of these valves can be lost due to flooding, APP-008 windows D7, D8, E7, and E8 provide high water annunciation for the SW pits. Operators should use these alarms in determining if and when these valves should be configured for safe shutdown operation.

Pressure transmitters (PT-1616 and 1684) provide RTGB indication and alarm capability for the North and South headers, respectively. Header pressures should be maintained between 40 to 50 psig with less than four SW pumps operating, and between 40 to 55 psig with four pumps operating. Indicated SW Header pressure on these gauges is approximately three psig less than SW Pump discharge pressure at the pumps.

The SW North and South Headers also supply water to the Turbine Building Header. The North Header supplies through Valve V6-16A and the South Header supplies through Valve V6-16B. In addition, Valve V6-16C is used to completely isolate the North and South Header from the Turbine Building Header. The normal power supply of Valve V6-16C is MCC-10. If MCC-10 loses its power V6-16C motor control will automatically switch to MCC-9 as the power supply. If a sustained low SW Header pressure occurs in coincidence with a Turbine Trip Signal, all three valves will automatically close; with an alarm provided on APP-008. (See SW-Figure 4)

The North SW Header can be further isolated by removing the spacer plate downstream of V6-12D and substituting a blank plate. The South Header does not currently have this function. Plant Modification (ESR 96-00707) will install this feature in the South Header at a later date.

During Refueling Outage (RFO) 19, a portion of the North SW Header underground piping was replaced with above ground piping. This replacement was due to several

INFORMATION USE ONLY

SW-09 003

Given the following plant conditions:

- A Reactor/Turbine trip occurred at 17:45:20
- A Safety Injection occurs at 17:45:40
- Service Water pressure indicates 30 psig
- Path-1 Immediate Actions are complete at 17:47:30

Which ONE (1) of the following analyzes the correct plant conditions?

A. Turbine building supply header valve closes and cross-connect isolation valves open

✓B. Turbine building supply header and cross-connect isolation valves close

C. Auxiliary building and Turbine building supply header valves close

D. Auxiliary building and Turbine building supply header valves open

Question: 2

Given the following conditions:

- A Reactor startup is in progress.
- Service Water pressure in **BOTH** headers decreases and stabilizes at 25 psig.

Assuming **NO** operator action, cooling flow is lost to the ...

a. Component Cooling Water Heat Exchangers.

b. Turbine Oil Coolers.

c. Instrument Air Compressors 'A' and 'B'.

d. Containment Air Recirculation Units.

Put another secondary in standby in line. Answer to obvious no discrimination

Answer:

b. Turbine Oil Coolers.

QUESTION NUMBER: 2
TIER/GROUP: 2/3

K/A: 076A1.02
Ability to predict and/or monitor changes in parameters (to prevent exceeding design limits) associated with operating the SWS controls including: Reactor and turbine building closed cooling water temperatures.

K/A IMPORTANCE: RO 2.6

10CFR55 CONTENT: 55.41(b) RO 4

OBJECTIVE: SW-09
Explain the normal operation of the SERVICE WATER control systems. Include function, instrumentation, interlocks, annunciators, and setpoints.

REFERENCES: SD-004

SOURCE: New Significantly Modified **X** Modified/Direct

Bank Number SW-09 003

JUSTIFICATION:

a. Plausible since portions of the SW system isolate on low pressure. CCW HXs are supplied by headers which do not isolate.

b. **CORRECT** SW isolates to the Turbine Building in the event pressure drops below 31 psig for more than 60 seconds. Turbine Oil Coolers are cooled by Turbine Building header.

c. Plausible since portions of the SW system isolate on low pressure. IA Compressors are supplied by headers which do not isolate.

d. Plausible since portions of the SW system isolate on low pressure. Containment Coolers are supplied by headers which do not isolate.

DIFFICULTY:
Comprehensive/Analysis Memory **X** Rating 2

Knowledge of the effect of low SW pressure and automatic actions which occur to restore pressure.

REFERENCES SUPPLIED: NONE

PSA RELATED

Question: 3

Given the following plant conditions:

- Unit 2 is at 30% power.
- A plant shutdown is in progress.
- Intermediate Range channel N-35 fails HIGH.
- The LEVEL TRIP switch on N-35 is in NORMAL.

Assuming **NO** operator actions regarding the failed Intermediate Range channel, a reactor trip ...

a. should have already occurred.

b. will occur as power is reduced below 25%.

c. will occur as power is reduced below 20%.

d. will occur as power is reduced below 10%.

Answer:

d. will occur as power is reduced below 10%.

QUESTION NUMBER: 3
TIER/GROUP: 1/2

K/A: 033AA1.02
Ability to operate and / or monitor the following as they apply to the Loss of Intermediate Range Nuclear Instrumentation: Level trip bypass

K/A IMPORTANCE: RO 3.0

10CFR55 CONTENT: 55.41(b) RO 6

OBJECTIVE: NI-12
Explain the reactor trips associated with the Nuclear Instrumentation System. Include purpose and setpoints.

REFERENCES: SD-010

SOURCE: New Significantly Modified **X** Modified/Direct

Bank Number NI-12 010

JUSTIFICATION:

a. Plausible since the trip coincidence is 1/2 and 1 channel has failed. Blocked until below P-10.
b. Plausible since this value is current equivalent trip setpoint. Blocked until below P-10.
c. Plausible since this value provides IR rod stop. Trip blocked until below P-10.
d. **CORRECT** A trip will occur when the IR high flux trip is unblocked. This occurs below 10% power (P-10).

DIFFICULTY:
Comprehensive/Analysis ~~X~~ Memory ~~X~~ Rating 3

Analysis of failure of instrumentation on continued plant shutdown.

OK
LEAVE AS IS

REFERENCES SUPPLIED: NONE

SR/IR CHANNELS TRIP LOGICS

NI-FIGURE-30 (Rev . 0)

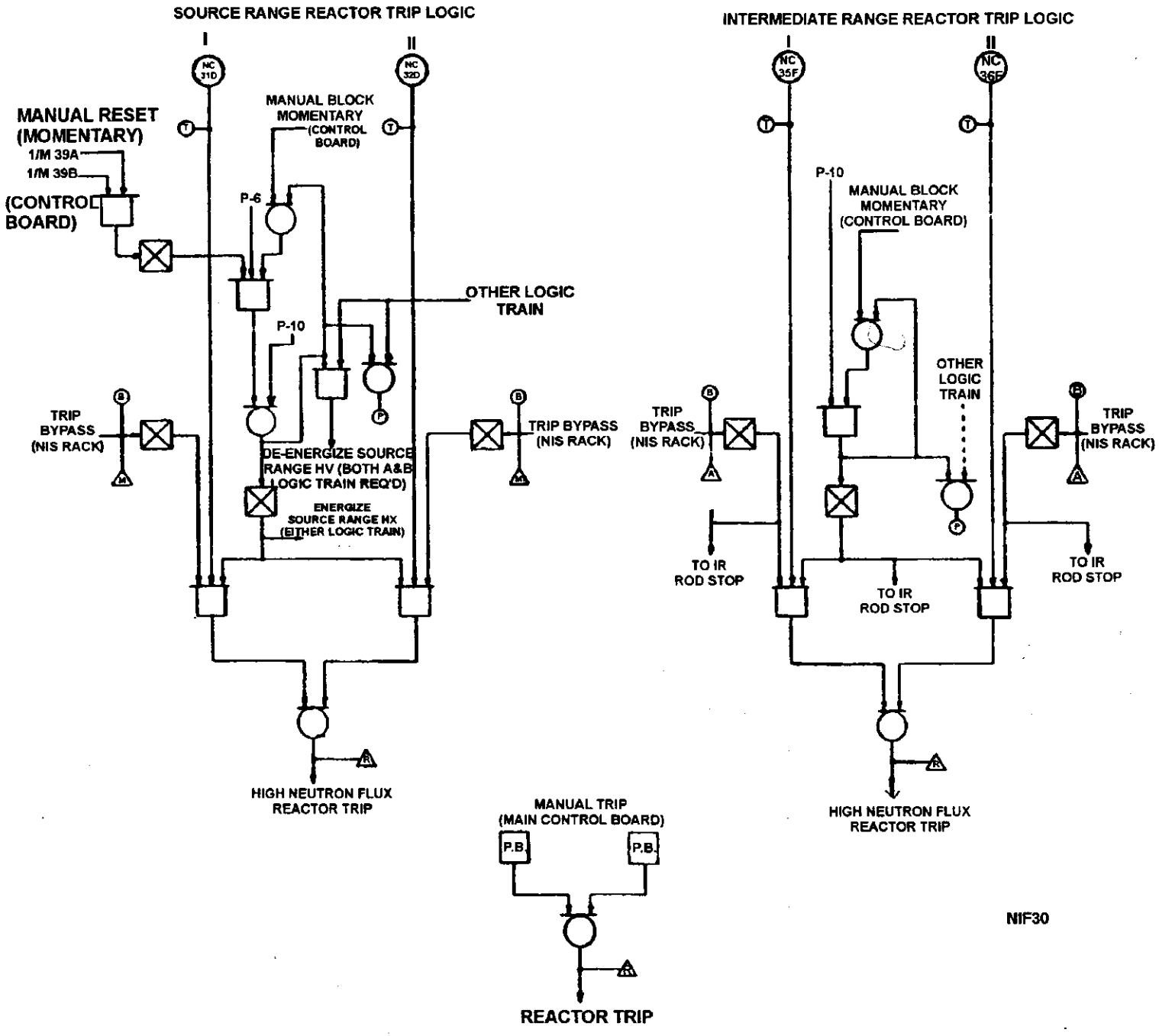

NI-12 010

Given the following plant conditions:

- Unit 2 is at 30% power
- Plant startup to 100% is in progress
- Intermediate Range channel N-35 fails HIGH

Which ONE (1) of the following describes the correct response to the above situation?

A. Reduce power below 20% until N-35 is repaired

B. Reduce power to between P-6 and P-10 until N-35 is repaired

C. Trip reactor and enter PATH-1, Reactor Trip or Safety Injection
When power on N-36 is less than 1.0 E-10, then manually energize SRHV

✓D. Place N-35 in TRIP BYPASS
Notify I&C to repair N-35
Continue plant startup to 100%

Question: 4

Given the following conditions:

- A Reactor Trip and SI has occurred.
- RCS activity is normal.

Which ONE (1) of the following would be an **EXPECTED** indication that a tube leak has subsequently occurred in S/G 'A'?

a. Pressurizer pressure increasing NOT plausible

b. R-19A, SG Blowdown Radiation Monitor, increasing

c. R-31A, Main Steamline Monitor, in alarm

d. S/G 'A" level increasing

Answer:

d. S/G 'A" level increasing

QUESTION NUMBER: 4
TIER/GROUP: 2/2

K/A: 039A2.03
Ability to (a) predict the impacts of the following malfunctions or operations; and (b) based on predictions, use procedures to correct, control, or mitigate the consequences: Indications and alarms for main steam and area rad monitors. (SGTR)

K/A IMPORTANCE: RO 3.4

10CFR55 CONTENT: 55.41(b) RO 10

OBJECTIVE: PATH-1-03
Demonstrate an understanding of selected steps, cautions, and notes in PATH-1 by explaining the basis of each.

REFERENCES: Path-1

SOURCE: New Significantly Modified **X** Modified/Direct

Bank Number PATH-1-03 016

JUSTIFICATION:

a. Following a SGTR, pressurizer pressure lowers. Plausible since pressure is affected by the leakage from the RCS.

b. SG blowdown would be isolated on the SI. Plausible since monitors are used to detect leakage while at power.

c. Following a reactor trip, N-16 rapidly decays so the steamline monitor will not detect any leakage. Plausible since monitors are used to detect leakage while at power.

d. **CORRECT** A level rise in a SG is an indication of a SGTR.

DIFFICULTY:
Comprehensive/Analysis **X** Memory Rating 2

Analysis of SG failures and plant conditions to determine expected parameter response.

REFERENCES SUPPLIED: NONE

The particulate and noble gas detectors are beta scintillation detectors (phosphor). The iodine detector is a gamma scintillation detector (sodium iodine). The detectors are housed in lead and steel shield assemblies. The electronics of the R-22 have a 5-decade range, 10 to 10^6 cpm.

The operator may perform detector checks. Each detector has an associated radioactive check source which may be used to generate a quick functional test of the detector and post-detector electronics. The R-22 has a self diagnostic check and alarm system for detector or electronics failure.

11.5.2.2.12 Radwaste Building Exhaust Monitor (R-23)

This unit continuously monitors the exhaust from the radwaste building. The monitor is similar to R-22 and R-38, but is an older analog model without digital circuitry. An isokinetic probe in the exhaust plenum removes the sample from the final filtered exhaust stream and sends it through a heat traced sample line to the monitor. The sample pump flowrate is maintained at 2.0 cfm. The maximum building exhaust flow rate is 15,000 scfm. Particulate, iodine and noble gas activity is monitored by three shielded detectors identical to those used in R-14, R-22 and R-23. Countrates are displayed at the monitor on analog meters and recorded on a strip chart recorder. Channel high, alert and fail alarms are indicated by local and remote colored lights and bells. The remote alarm station is on the first floor in a frequently occupied area of the building.

11.5.2.2.13 Fuel Handling Building Basement Exhaust High Range Radioactive Gas Monitor (R-30)

This channel continuously monitors the ventilation exhaust air (HVE-14) from the Fuel Handling Building basement and Hot Machine Shop for gaseous radioactivity. The system consists of a GM type detector mounted on the exterior of the exhaust duct in a lead collimator. The monitor overlaps the upper end of R-20's range by a factor of 10, and also meets the upper end of the range required by NUREG 0737 and Reg. Guide 1.97.

11.5.2.2.14 Main Steamline Radiation Gas Monitors (R-31A, B, and C)

These three channels continuously monitor the main steam lines. The GM tube detectors are externally mounted next to the steam line between the containment and the steam line PORV. The detectors are located in collimated lead shields designed to reduce background from design based levels. Calculations were made to account for the low energy gamma rays being attenuated by the approximately one inch steel steam line wall. Noble gas resulting from a primary to secondary leak has the potential of escaping to the atmosphere through an open main steam line PORV.

10.0 ATTACHMENTS

ATTACHMENT 10.1
Page 1 of 2

ESF PHASE A ISOLATION SIGNAL VALVE OPERATION

The signal causing this alarm will also CLOSE the following valves;
PS-956A & PS-956B Pressurizer Steam Space Valves
PS-956C & PS-956D Pressurizer Liquid Space Valves
PS-956E & PS-956F Hot Leg Loops 2 & 3 Valves
PS-956G & PS-956H Accumulator Sample Valves
RC-516 & RC-553 Pressurizer Relief Tank to Gas Analyzer Valves
RC-519A & RC-519B pressurizer Relief Tank Make-up Isolation Valves
CVC-200A, CVC-200B, & CVC-200C Letdown Orifice Isolation Valves
CVC-204A, & CVC-204B Letdown Line Isolation
RC-550 N_2 Pressure Relief Tank Isolation Valve
CC-739 Excess Letdown HX Outlet Isolation
WD-1794 & WD-1789 RCDT Sample Line to Gas Analyzer
WD-1721 & WD-1722 Reactor Coolant Drain Pump Discharge
WD-1723 & WD-1728 Containment Sump Discharge
WD-1787 & WD-1786 Reactor Coolant Drain Tank Vent
SI- 855 Accumulator Nitrogen Supply Isolation
FP-248, FP-249, FP-256, FP-258 Containment Fire Isolations
PCV-1716, Instrument Air Isolation to Containment
RMS-1, 2, 3, & 4 Containment Air Sampling

FCV-1933A, FCV-1933B, FCV-1934A, FCV-1934B, FCV-1935A, FCV-1935B,
Steam Generator "A", "B" & "C" Sample Control Valves

FCV-1930A, FCV-1930B, FCV-1931A, FCV-1931B, FCV-1932A, FCV-1932B,
Steam Generator "A", "B" & "C" Blowdown Flow Control Valves

Containment Ventilation Isolation
V12-6 Containment Purge Supply
V12-7 Containment Purge Supply
V12-8 Containment Purge Exhaust
V12-9 Containment Purge Exhaust
V12-10 Containment Pressure Relief
V12-11 Containment Pressure Relief
V12-12 Containment Vacuum Relief
V12-13 Containment Vacuum Relief
V12-18 Post Accident Containment Vent

INFORMATION USE ONLY

PATH-1-03 016

Given the following plant conditions:

- A Reactor Trip and SI has occurred from an unisolable main steam line break on a S/G "A"
- Diagnostic actions are in progress
- The S/G "A" has been isolated per EPP-11, "Faulted SG Isolation", and is dry.
- The operators have stabilized RCS temperature by dumping steam from the intact S/G's following the dryout of the faulted S/G "A".

Which one (1) of the following would be the FIRST indication to the operators that a 250 gpm tube leak developed in S/G "A"?

A. R-31A, Main Steamline Monitor.

B. R-19A, SG blowdown Radiation Monitor.

✓C. Pressurizer level decreasing.

D. SG level increasing following the feed isolation.

Question: 5

Given the following conditions:

- An automatic CV Spray actuation has occurred.
- CV Spray Pump 'A' trips and will **NOT** restart.
- The operator closes SI-880A and SI-880B, CV Spray Pump 'A' Discharge Valves.

Closing SI-880A and SI-880B ensures that if the check valve upstream of either SI-880 valve fails ...

a. gas binding of the CV spray pump is prevented **AND** containment integrity is maintained.

b. containment integrity is maintained **AND** the RWST does **NOT** become contaminated.

c. the RWST does **NOT** become contaminated **AND** a LOCA outside containment does **NOT** occur.

d. gas binding of the CV spray pump is prevented **AND** a LOCA outside containment does **NOT** occur.

Answer:

a. gas binding of the CV spray pump is prevented **AND** containment integrity is maintained.

QUESTION NUMBER: 5
TIER/GROUP: 1/1

K/A: 069AA1.03
Ability to operate and / or monitor the following as they apply to the Loss of Containment Integrity: Fluid systems penetrating containment

K/A IMPORTANCE: RO 2.8

10CFR55 CONTENT: 55.41(b) RO 9

OBJECTIVE: CSS-05
Describe the performance and design attributes of the major CSS components.

REFERENCES: EPP-7 Basis

SOURCE: New Significantly Modified Modified/Direct **X**

Bank Number CSS-14 004

JUSTIFICATION:

a. **CORRECT** If a CV Spray Pump fails to start the discharge valves are closed in the event of an additional failure of the check valves to seat. This ensures the spray pump does not become gas bound from containment and containment integrity is maintained.

b. Plausible since Containment Integrity is a concern with the pump failure. Additional concern is gas binding of CV spray pump.

c. Plausible since other EOP conditions address concern with contamination of RWST following an accident inside containment. Performed to ensure the spray pump does not become gas bound from containment and containment integrity is maintained.

d. Plausible since gas binding is a concern with the pump failure. Additional concern is containment integrity.

DIFFICULTY:
Comprehensive/Analysis Memory **X** Rating 3

Knowledge of reasons for EPP actions.

REFERENCES SUPPLIED: NONE

RNP STEP	WOG STEP	BASIS/DIFFERENCES

20-21 8

WOG BASIS

PURPOSE: To stop containment spray pumps if running and no longer needed

BASIS:

Spray pumps are automatically actuated on HI-3 containment pressure. In E-0, REACTOR TRIP OR SAFETY INJECTION, Step 14, the operator verifies that the Containment Spray System is operating if it is required. During a LOCA, the need for continued operation of the spray system is monitored by this step in ES-1.1. After containment pressure is reduced, the pumps can be stopped to prevent RWST depletion. If at any time the containment pressure increases above the HI-3 containment pressure setpoint, the ORANGE path of the Containment Status Tree sends the operator to FR-Z.1, RESPONSE TO HIGH CONTAINMENT PRESSURE. Step 3 of FR-Z.1 checks the need for containment spray and verifies that the spray system is operational if it is required.

KNOWLEDGE

As part of the action to terminate containment spray, the operator should close the motor operated valve on the containment spray pump discharge line when stopping the containment spray pump. This action will ensure containment isolation. This step is a continuous action step.

RNP DIFFERENCES/REASONS

The EPP adds substep 19.c to close the CV spray pump discharge valves which is included as a knowledge function in the ERG. RNP made verbal commitment for this step to prevent containment atmosphere from entering the CV spray system and possibly gas binding the pumps. The issue of this type of gas binding was raised by the NRC in 1990 and the EOPs were revised accordingly. The RNP step has been split into two steps to simplify the transitions.

SSD DETERMINATION

This is an SSD per criterion 4.

22-23 9

WOG BASIS

PURPOSE: To ensure all control rods are inserted for adequate shutdown margin

BASIS:

A subcritical core is verified if all rods are at the bottom according to the rod bottom lights and the rod position indicators. If these indications reveal that one rod is not inserted, no immediate action is required since the core is designed for adequate shutdown margin with one rod stuck out. However, if more than one rod fails to insert fully, the shutdown reactivity margin must be made up through emergency boration to account for the reactivity worth of the stuck rods.

RNP DIFFERENCES/REASONS

The ERG requests a setpoint for boration required for each stuck rod. Since this number can not be calculated for a set amount due to variations in rod drop configurations, the EPP will call for boration to CSD conditions. This provides a conservative boration target that is available in the Control Room during normal operation. The intent to assure SDM is maintained by the RNP step.

SSD DETERMINATION

This is an SSD per criterion 5.

Question: 5

Which ONE (1) of the following explains the basis for verifying Phase A Isolation during the performance of FRP-J.1, "Response To High Containment Pressure"?

a. Isolate non-essential Containment penetrations to prevent the release of radioactive materials from the Containment

b. Isolate Containment penetrations that may be ruptured and contributing to the high Containment pressure

c. Ensures Containment Purge valves are closed in the event a purge was in progress

d. Ensures Component Cooling Water Containment penetrations are closed in the event of a header break inside Containment

Answer:

a. Isolate non-essential Containment penetrations to prevent the release of radioactive materials from the Containment

ANSWER IS TO OBVIOUS REPLACE Q

QUESTION NUMBER: 5
TIER/GROUP: 1/1

K/A: 069AA1.03
Ability to operate and / or monitor the following as they apply to the Loss of Containment Integrity: Fluid systems penetrating containment

K/A IMPORTANCE: RO 2.8

10CFR55 CONTENT: 55.41(b) RO 9

OBJECTIVE: FRP-J.1-03
Demonstrate an understanding of selected steps, cautions, and notes in FRP-J.1 by explaining the basis of each.

REFERENCES: FRP-J.1
FRP-J.1 Basis

SOURCE: New Significantly Modified Modified/Direct **X**

Bank Number FRP-J.1-03 004

JUSTIFICATION:

a. **CORRECT** Provides isolation of penetrations not required for ESF functions to minimize likelihood of release from containment.

b. Plausible since Phase A does isolate penetrations. Systems entering containment are not capable of causing an overpressure condition of this magnitude.

c. Plausible since Containment Purge does get isolated following SI. Isolated by Containment Vent Isol signal, not Phase A.

d. Plausible since CCW valves receive an automatic close signal when Containment conditions degrade. Isolated by Phase B signal, not Phase A.

DIFFICULTY:
Comprehensive/Analysis Memory **X** Rating 2

Knowledge of reasons for ERG actions.

REFERENCES SUPPLIED: NONE

STEP	INSTRUCTIONS	RESPONSE NOT OBTAINED
1.	Check CONTAINMENT ISOLATION PHASE A Valves - CLOSED	Perform the following: a. Momentarily depress either of the CONTAINMENT ISOLATION Pushbuttons. b. IF any CONTAINMENT ISOLATION PHASE A Valve fails to close, THEN locally isolate the affected penetration.
2.	Check CONTAINMENT VENTILATION ISOLATION Valves - CLOSED	Perform the following: a. Momentarily depress either of the CONTAINMENT ISOLATION Pushbuttons. b. IF any CONTAINMENT VENTILATION ISOLATION Valve fails to close, THEN locally isolate the affected penetration.
3.	Check CV Pressure - HAS INCREASED TO GREATER THAN 20 PSIG	Return to procedure and step in effect.
4.	Determine Availability Of CV Spray As Follows:	
	a. Check CV Spray - BEING CONTROLLED BY EPP-15, LOSS OF EMERGENCY COOLANT RECIRCULATION	a. Go To Step 5.
	b. Go To Step 6	

CAROLINA POWER & LIGHT COMPANY
H. B. ROBINSON STEAM ELECTRIC PLANT, UNIT NO. 2

FRP-J.1-BD

FRP-J.1 BASIS DOCUMENT

REVISION 6

RECOMMENDED BY:_____ DATE: _____

APPROVED BY:_____ DATE: _____

RNP STEP	WOG STEP	BASIS/DIFFERENCES

1 1

WOG BASIS

PURPOSE: To ensure non-essential containment penetrations are isolated

BASIS:

This step instructs the operator to isolate the non-essential containment penetrations to prevent the release of radioactive materials from containment. Thus, the operator is required in this step to ensure that all Phase A isolation valves are in the closed position. It should be noted that the operator actions in other guidelines may have resulted in deliberate actions to defeat containment isolation of specific fluid lines. Therefore, if any lines are necessary for plant recovery, they may not be required to be isolated.

RNP DIFFERENCES/REASONS

EOP RNO provides plant specific guidance, not requested by ERG, to manually initiate a Containment Phase A isolation.

SSD DETERMINATION

This is an SSD per criterion 10.

2 2

WOG BASIS

PURPOSE: To ensure non-essential containment ventilation penetrations are isolated

BASIS:

This step instructs the operator to verify that isolation of the non-essential ventilation penetrations has occurred to prevent potential release of radioactive materials from containment.

RNP DIFFERENCES/REASONS

EOP RNO provides plant specific guidance, not requested by ERG, to manually initiate a Containment Ventilation isolation.

SSD DETERMINATION

This is an SSD per criterion 10.

3-7 3

WOG BASIS

PURPOSE: To verify automatic actuation of containment spray and containment isolation Phase B when containment pressure exceeds the spray actuation pressure setpoint (Hi-3)

BASIS:

This step instructs the operator to verify containment spray, since this guideline is entered either when containment pressure exceeds Hi-3 (containment spray initiation) or when containment pressure exceeds containment design pressure. When containment pressure exceeds the Hi-3 setpoint, containment spray is required and should be automatically initiated to mitigate the containment pressure transient. Containment isolation Phase B valves are also closed to isolate potential radioactive release paths from containment. With Phase B containment isolation, the RCPs are tripped since component cooling water to the RCP seals and motors is then isolated. Therefore, if containment spray is required, the operator should ensure that the containment spray pumps are running, that containment isolation Phase B valves are closed and the RCPs tripped, and that the containment spray system valves are in the proper emergency alignment.

RNP DIFFERENCES/REASONS

The RNP procedure has split this step into several steps in order to simplify the actions and prevent the step from crossing multiple pages. The ERG caution has been included at EOP step 4 and will be discussed separately below.

Question: 6

Given the following conditions:

- Reactor Power at 100%
- Control Room Area Radiation monitor R-1 alarms.

Control Room Ventilation ...

a. must be manually aligned for Emergency Pressurization Mode.

b. must be manually aligned for Emergency Recirculation Mode.

c. automatically aligns for Emergency Pressurization Mode.

d. automatically aligns for Emergency Recirculation Mode.

Answer:

c. automatically aligns for Emergency Pressurization Mode.

QUESTION NUMBER: 6
TIER/GROUP: 2/1

K/A: 072A3.01
Ability to monitor automatic operation of the ARM systems including: Changes in ventilation alignment

K/A IMPORTANCE: RO 2.9

10CFR55 CONTENT: 55.41(b) RO 11

OBJECTIVE: RM-09
Explain the normal operation of the RM control systems. Include function, instrumentation, interlocks, annunciators, and setpoints.

REFERENCES: AOP-005
SD-036

SOURCE: New Significantly Modified **X** Modified/Direct

Bank Number RM-09 008

JUSTIFICATION:

a. Plausible since this is the alignment that is achieved. Occurs automatically on high alarm on R-1.

b. Plausible since this is an emergency alignment. On high alarm on R-1, Control Room ventilation aligns automatically for Emergency Pressurization.

c. **CORRECT** On a high alarm on R-1, Control Room ventilation automatically aligns for Emergency Pressurization.

d. Plausible since this is an emergency alignment. On high alarm on R-1, Control Room ventilation aligns automatically for Emergency Pressurization.

DIFFICULTY:
Comprehensive/Analysis Memory **X** Rating 3

Knowledge of ventilation response to high radiation alarm.

REFERENCES SUPPLIED: NONE

STEP	INSTRUCTIONS	RESPONSE NOT OBTAINED

ATTACHMENT 1

AREA MONITOR R-1 - CONTROL ROOM

(Page 1 of 1)

1.	Verify Control Room Ventilation System Has Shifted To Emergency Pressurization Mode As Follows:	
	a. CONT RM AIR EXHAUST Fan, HVE-16 - STOPPED	
	b. CLEANING Fan HVE-19 A OR B - RUNNING	
	c. CONTROL ROOM AIR EXHAUST FAN DISCHARGE DAMPERs - CLOSED • CR-D1A-SA • CR-D1B-SB	c. Locally verify - CLOSED • CR-D1A-SA • CR-D1B-SB
2.	Contact RC Personnel To Perform The Following: • Sample Control Room atmosphere for airborne radioactivity • Perform radiological survey of Control Room	
3.	Locally Open Breaker AUX BUILDING SUPPLY FAN HVS-1 (CMPT-7J) On MCC-5 Within 60 Minutes Of The Alarm	
4.	Go To The Main Body, Step 1, Of This Procedure	

- END -

6.2.2 Control Room

System Startup

Check WCCU compressor oil level is between top and bottom marks on sight-glass. Ensure refrigerant system lined up IAW MMM-030.WCCU's and fans should be operated in trains. Verify lower setpoint of 71°F with 3°F differential (on WCCU control panel). Set control room heater (EDH-5) at 75°F. Verify dampers CR-D5/D7 are secured in marked position to ensure T.S. flow limits are meet.
Select ACTIVE/STANDBY unit on WCCU-1A control panel, then ACTIVE OFF-ON-RESET switch to "ON", and verify ACTIVE mode illuminated. Select standby OFF-ON-RESET switch to "ON", verify STANDBY mode illuminated.

Start one AHU, place one AHU in STANDBY or AUTO. Open dampers CR-D2A/D2B and start HVE-16. Verify dampers CR-D1A/1B are open.

Shifting Trains

Stop running AHU, and verify standby AHU starts. Swap active/standby WCCU's via priority switch.

Emergency Pressurization

Performed manually via RTGB controls or automatically on SI signal or Control Room area monitor (R-1) alarm. Automatic actions are, (Assuming HVA-1A/1B already in operation supplying AHU). HVE-19A or 19B (HVE-19A receives auto start signal) supplying ACU. HVE-16 off with CR-D1A and D1B shut. HVS-1, Aux. Bldg. supply fan breaker must be manually opened within 30 minutes of alarm.

Emergency Recirculation

Performed manually via RTGB controls. With HVA-1A/1B supplying AHU, start HVE-19A or 19B to supply ACU. Stop HVE-16 and check Dampers CR-D1A and D1B shut. Close Outside Air Dampers CR-D2A and D2B
Control Room Inaccessibility

AOP-004, Att. 1, Auxiliary Building Operator local actions trip breakers on MCC16/18 for both AHU supply fans and ACU fans.

AOP-022, Loss of SW, Att. 3, Control Room HVAC Emergency Cooling Water Alignment

INFORMATION USE ONLY

RM-09 008

Given the following plant conditions:

- Reactor Power at 100%
- Area radiation monitor R-1 alarms reading 3.0 mR/hr

Which ONE (1) of the following describes the Automatic action(s) which take place?

A. Valve RCV-014 closes.

B. Containment ventilation system isolation takes place.

✓C. Control room ventilation shifts to pressurization mode.

D. The EOF/TSC emergency fan system and the PAP West HEPA filter unit will activate.

Question: 7

Given the following conditions:

- Reactor power is 85%.
- Control Rod Bank 'D' Demand is at 195 steps.
- IRPI indication for Bank D Control Rods are as follows:

BANK 'D' ROD	IRPI POSITION
D-8	123"
M-8	121"
H-4	120"
H-8	110"
H-12	122"

Design power peaking and Shutdown Margin Limits ...

a. are met under these conditions.

b. will be met if Control Rod H-8 is withdrawn to 115".

c. will be met if power is reduced below 80%.

d. will be met if Control Rod D-8 is inserted to 120".

Answer:

b. will be met if Control Rod H-8 is withdrawn to 115".

QUESTION NUMBER: 7
TIER/GROUP: 1/1

K/A: 005AK3.05
Knowledge of the reasons for the following responses as they apply to the Inoperable / Stuck Control Rod: Power limits on rod misalignment

K/A IMPORTANCE: RO 3.4

10CFR55 CONTENT: 55.41(b) RO 2

OBJECTIVE: RDCNT-12
State the Technical Specification Limitations and explain the bases for the Rod Control System.

REFERENCES: Tech Spec 3.1.4

SOURCE: New Significantly Modified **X** Modified/Direct

Bank Number RDCNT-12 009

JUSTIFICATION:

a. Plausible since rods would be considered aligned if bank position was above 200 steps (within 15 inches). With rods below 200 steps, requirement is within 7.5 inches.

b. **CORRECT** Below 200 steps, rods must be aligned within 7.5 inches of average IRPI indication for the rods in the bank. If rod H-8 is included in this calculation, the average rod height is 119.4". If rod H-8 is not included in this calculation, the average rod height is 121.5".

c. Plausible since actions are taken to lower power if a misaligned rod cannot be aligned within a time period. Although rod is misaligned, required power level is 70%, not 80%.

d. Plausible since this rod is higher than the average of the rods. Lowering rod D-8 to 120 inches would lower the average rod height to 120.75" if rod H-8 is not included in the calculation and 118.8" if rod H-8 is included in the calculation. Both of these values would still leave rod H-8 misaligned.

DIFFICULTY:
Comprehensive/Analysis **X** Memory Rating 3

Comprehension of rod alignment limits and determination of rod misalignment.

REFERENCES SUPPLIED: NONE

3.1 REACTIVITY CONTROL SYSTEMS

3.1.4 Rod Group Alignment Limits

LCO 3.1.4 All shutdown and control rods shall be OPERABLE.

AND

Individual indicated rod positions shall be as follows:

a. For bank demand positions ≥ 200 steps, each rod shall be within 15 inches of its bank demand position, and

b. For bank demand positions < 200 steps, each rod shall be within 7.5 inches of the average of the individual rod positions in the bank.

APPLICABILITY: MODES 1 and 2.

ACTIONS

CONDITION	REQUIRED ACTION	COMPLETION TIME
A. One or more rod(s) inoperable.	A.1.1 Verify SDM is within the limits provided in the COLR.	1 hour
	OR	
	A.1.2 Initiate boration to restore SDM to within limit.	1 hour
	AND	
	A.2 Be in MODE 3.	6 hours

(continued)

B 3.1 REACTIVITY CONTROL SYSTEMS

B 3.1.4 Rod Group Alignment Limits

BASES

BACKGROUND

The OPERABILITY (e.g., trippability) of the shutdown and control rods is an initial assumption in all safety analyses that assume rod insertion upon reactor trip. Maximum rod misalignment is an initial assumption in the safety analysis that directly affects core power distributions and assumptions of available SDM.

The applicable criteria for these reactivity and power distribution design requirements are described in the UFSAR (Ref. 1) and 10 CFR 50.46, Acceptance Criteria for Emergency Core Cooling Systems for Light Water Nuclear Power Plants" (Ref. 2).

Mechanical or electrical failures may cause a control rod to become inoperable or to become misaligned from its group. Control rod inoperability or misalignment may cause increased power peaking, due to the asymmetric reactivity distribution and a reduction in the total available rod worth for reactor shutdown. Therefore, control rod alignment and OPERABILITY are related to core operation in design power peaking limits and the core design requirement of a minimum SDM.

Limits on control rod alignment have been established, and all rod positions are monitored and controlled during power operation to ensure that the power distribution and reactivity limits defined by the design power peaking and SDM limits are preserved.

Rod cluster control assemblies (RCCAs), or rods, are moved by their control rod drive mechanisms (CRDMs). Each CRDM moves its RCCA one step (approximately 5/8 inch) at a time, but at varying rates (steps per minute) depending on the signal output from the Rod Control System.

The RCCAs are divided among control banks and shutdown banks. Each bank may be further subdivided into two groups to provide for precise reactivity control. A group consists of two or more RCCAs that are electrically paralleled to step simultaneously. A bank of RCCAs consists of two groups

(continued)

RDCNT-12 009

According to the bases Technical Specification B 3.1.4; Rod Group Alignment Limits, the rod alignment limits are based on which ONE (1) of the following?

✓A. Ensure that the design power peaking and Shutdown Margin limits are preserved.

B. To ensure that more neutron flux is generated in the lower half of the core during a dropped rod event.

C. Rod misalignments could lead to fuel damage only in the case of multiple dropped rods

D. To ensure that core delta T remains within the accident analysis described in the UFSAR

Question: 7

Given the following conditions:

- Reactor power is 85%.
- Control Rod Bank 'D' Demand is at 195 steps.
- IRPI indication for Bank D Control Rods are as follows:

BANK 'D' ROD	IRPI POSITION
D-8	123"
M-8	121"
H-4	120"
H-8	~~111"~~ 110
H-12	122"

Design power peaking and Shutdown Margin Limits ...

a. are met under these conditions.

b. will be met if Control Rod H-8 is withdrawn to 115".

c. will be met if power is reduced below 80%.

d. will be met if Control Rod D-8 is inserted to 120".

Answer:

b. will be met if Control Rod H-8 is withdrawn to 115".

Question: 7

Given the following conditions:

- Reactor power is 100%.
- Control Rod Bank 'D' Demand is at 218 steps.
- Bank D Control Rod H-8 is at 128 inches as indicated by IRPI.

Design power peaking and Shutdown Margin Limits ...

a. are met under these conditions.

b. will be met **ONLY** after H-8 is aligned within 12 steps of bank demand.

c. will be met **ONLY** after power is reduced below 70%.

d. will be met **ONLY** if Emergency Boration is initiated.

CAN 1 OF THE "ONLY" BE DELETED

Answer:

a. are met under these conditions.

QUESTION NUMBER: 7
TIER/GROUP: 1/1

K/A: 005AK3.05
Knowledge of the reasons for the following responses as they apply to the Inoperable / Stuck Control Rod: Power limits on rod misalignment

K/A IMPORTANCE: RO 3.4

10CFR55 CONTENT: 55.41(b) RO 2

OBJECTIVE: RDCNT-12
State the Technical Specification Limitations and explain the bases for the Rod Control System.

REFERENCES: Tech Spec 3.1.4

SOURCE: New Significantly Modified **X** Modified/Direct

Bank Number RDCNT-12 009

JUSTIFICATION:

a. **CORRECT** Above 200 steps, rods are considered aligned unless they are out of alignment by more than 15 inches of bank demand. 15 inches is equivalent to 24 steps.

b. Plausible since 12 steps (7.5 inches) is requirement for rod banks below 200 steps. Must be more than 24 steps (15 inches) out of alignment at this bank position.

c. Plausible since actions are taken to lower power below 70% if a misaligned rod cannot be aligned within a time period. Rod is not misaligned.

d. Plausible since actions are taken to borate if SDM cannot be verified in response to a misaligned rod. Rod is not misaligned.

DIFFICULTY:
Comprehensive/Analysis **X** Memory Rating 3

Comprehension of rod alignment limits and determination of rod misalignment.

REFERENCES SUPPLIED: NONE

6/6

Question: 8

Which ONE (1) of the following describes the effect of the given signals on an in-progress Containment Purge?

	CONTAINMENT HIGH RADIATION SIGNAL (R-11/12)	MANUAL SAFETY INJECTION SIGNAL	MANUAL CONTAINMENT SPRAY SIGNAL
a.	Secured	Secured	**NO** effect
b.	Secured	**NO** effect	Secured
c.	**NO** effect	Secured	Secured
d.	Secured	Secured	Secured

Answer:

d.	Secured	Secured	Secured

QUESTION NUMBER: 8
TIER/GROUP: 2/1

K/A: 013G2.3.9
Knowledge of the process for performing a containment purge. (ESFAS)

K/A IMPORTANCE: RO 2.5

10CFR55 CONTENT: 55.41(b) RO 9

OBJECTIVE: CVHVAC-09
Explain the normal operation of the CV HVAC, PACV and H2 Recombiner control systems. Include function, instrumentation, interlocks, annunciators, and setpoints.

REFERENCES: SD-006

SOURCE: New Significantly Modified **X** Modified/Direct

Bank Number CVHVAC-09 004

JUSTIFICATION:

a. Plausible since automatic spray actuation does not generate CVI. Manual spray actuation generates CVI.

b. Plausible since SI initiate push buttons are not labeled CVI. Manual SI causes CVI.

c. Plausible since high radiation only provides CVI and no other function. High radiation causes CVI.

d. **CORRECT** Containment Ventilation Isolation is generated automatically by high radiation on R-11/12 and SI. Manual actuation is provided by manual SI, manual Phase A/CVI, and manual Spray/Phase B/CVI.

DIFFICULTY:
Comprehensive/Analysis Memory **X** Rating 3

Knowledge of signals which generate a Containment Vent Isolation.

REFERENCES SUPPLIED: NONE

SAFEGUARD ACTUATION SIGNALS

ESF-FIGURE-5 (Rev . 0)

SAFEGUARD ACTUATION SIGNALS

NOTES:

1. TWO MOMENTARY PUSHBUTTONS: PRESS EITHER ONE TO ACTUATE
2. TWO MOMENTARY PUSHBUTTONS: PRESS BOTH TO ACTUATE
3. ONE MOMENTARY PUSHBUTTON PER LOOP
4. CV PRESS BISTABLES ENERGIZE TO ACTUATE - ALL OTHERS DE-ENERGIZE TO ACTUATE
5. ENCLOSED CIRCUITRY NOT PART OF SAFEGUARDS SYSTEMS AND NOT REDUNDANT
6. COMPONENTS ACTUATED BY CV ISOLATION PHASE A & B AND BY CV VENTILATION ISOLATION ARE ALL INDIVIDUALLY SEALED IN SO THAT LOSS OF THE ACTUATION SIGNAL WILL NOT CAUSE COMPONENTS TO RETURN TO ORIGINAL POSITION.
7. PC-950, -951A, 951B FED BY THE EDG AUTOMATICALLY ON BLACKOUT
8. COMPONENTS ACTUATED BY SI SIGNAL ARE ALL INDIVIDUALLY SEALED IN SO THAT LOSS OF SI SIGNAL WILL NOT CAUSE COMPONENTS TO RETURN TO ORIGINAL POSITIONS.
9. COMPONENTS ACTUATED BY SI, PHASE A, AND CV VENTILATION ISOLATION SIGNALS ARE INDIVIDUALLY SEALED IN SO THAT LOSS OF THE ACTUATION SIGNAL WILL NOT CAUSE COMPONENTS TO RETURN TO THE POSITION PRIOR TO ACTUATION SIGNAL

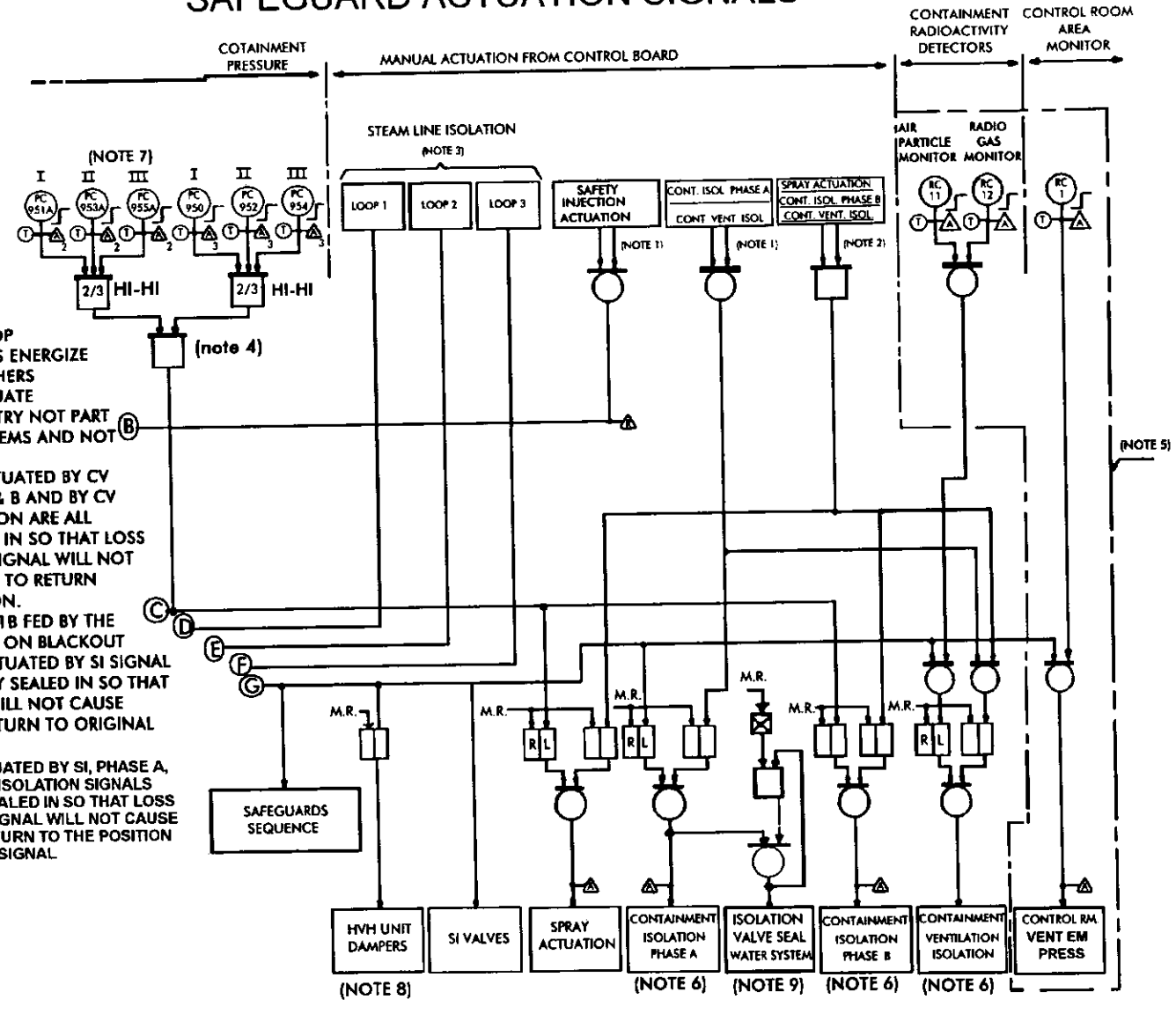

INFORMATION USE ONLY

SAFEGUARD ACTUATION SIGNALS

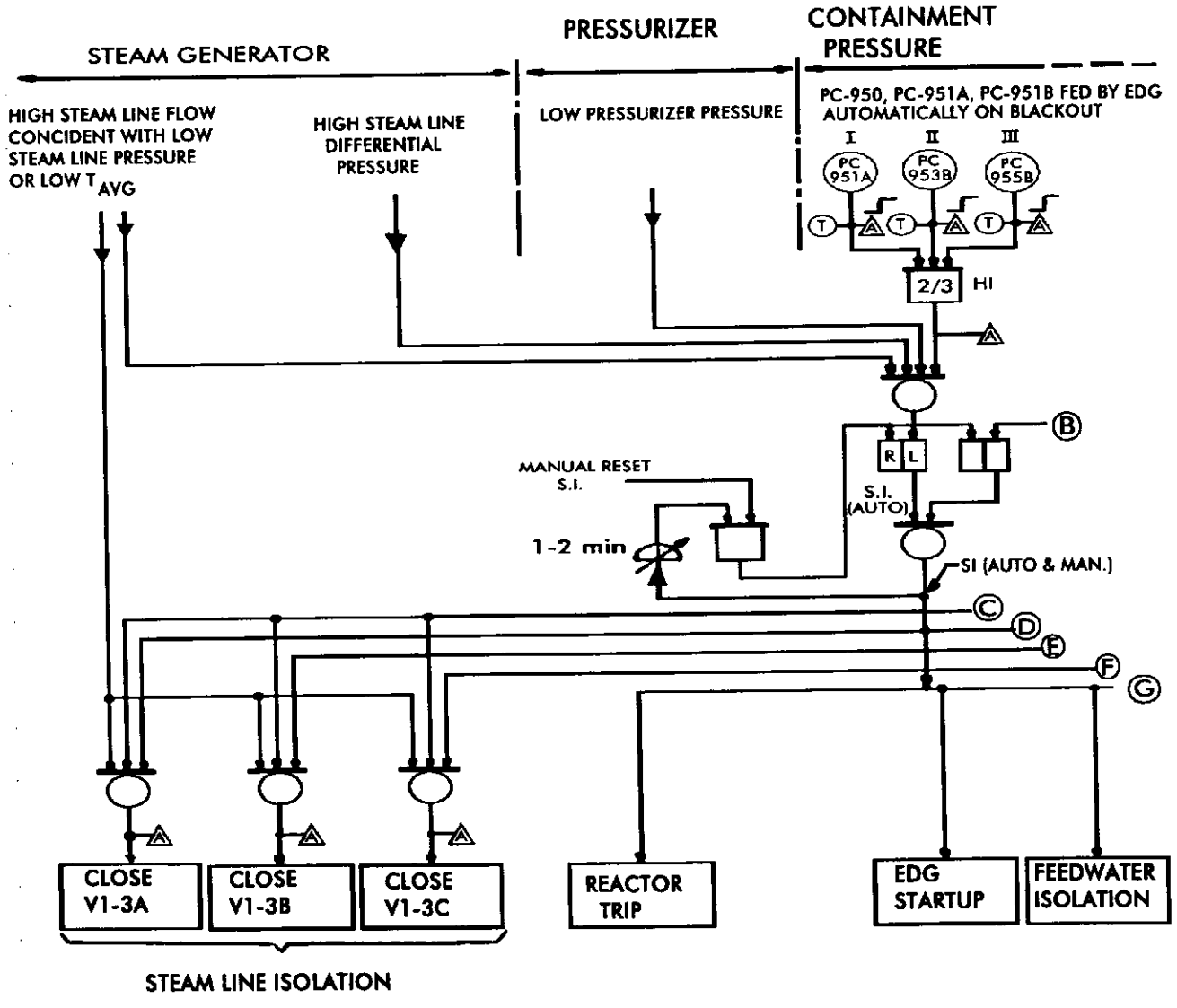

INFORMATION USE ONLY

CVHVAC-09 004

Assuming that a Phase "A" push button was inadvertently pressed during the performance of a Containment purge operation. Which ONE (1) of the following actions is required before the purge dampers can be repositioned or the Purge Exhaust Fans started?

A. Verify that Safety Injection is not required

✓B. Depress the "Vent Isol" reset push button

C. The breaker for the previously operating Purge Exhaust Fan(s) must be reset

D. No action required

012

Question: 9

After resetting Safety Injection, to reset IVSW the operator must depress ...

a. IVSW RESET **ONLY**.

b. CONT VENT ISOL RESET and IVSW RESET.

c. PHASE B RESET and IVSW RESET.

d. PHASE A RESET and IVSW RESET.

Answer:

d. PHASE A RESET and IVSW RESET.

QUESTION NUMBER: 9
TIER/GROUP: 2/3

K/A: 103A2.03
Ability to (a) predict the impacts of the following malfunctions or operations on the containment and (b) based on those predictions, use procedures to correct, control, or mitigate the consequences of those malfunctions or operations: Phase A and B

K/A IMPORTANCE: RO 3.5

10CFR55 CONTENT: 55.41(b) RO 7

OBJECTIVE: CV-08
Explain the component operation associated with each switch position for the CV and IVSW System switches and controls.

REFERENCES: SD-035

SOURCE: New Significantly Modified **X** Modified/Direct

Bank Number CV-08 002

JUSTIFICATION:

a. Plausible since a separate reset exists for IVSW. Phase A must be reset prior to resetting IVSW.

b. Plausible since CVI also occurs on an SI. CVI provides no input to IVSW.

c. Plausible since Phase B is a containment isolation signal. Phase B provides no input to IVSW.

d. **CORRECT** Phase A maintains a locked in signal to IVSW. Until Phase A is reset, resetting IVSW has no effect.

DIFFICULTY:
Comprehensive/Analysis Memory **X** Rating 3

Knowledge of reset requirements for IVSW.

REFERENCES SUPPLIED: NONE

PCV-1922 A and PCV-1922 B.

3. System Actuation

The IVSW system is normally in a static condition.
The following signals will de-energize PRV-1922 A and PRV-1922 B which causes them to fail open and thus actuate IVSW.

- Loss of power to PRV-1922 A, PRV-1922 B (Power supplies for PCV-1922 A and B - auxiliary panels 'GC' and 'DC')
- Loss of air
- Safety injection automatic or manual
- Phase "A" isolation manual

To reset IVSW, press reset buttons (one for each valve) located in the ERFIS computer room (1922A, 1922B).

Reset only after Phase A/SI reset and with SS permission.
To terminate manual header "A" just close individual isolation valves.

3.6 Penetration Pressurization System (PPS)

3.6.1 System Purpose

The Containment Penetration Pressurization System (PPS) was originally designed to provided a means of continuously pressurizing the positive pressure zones incorporated into the containment penetrations in order to maintain these zones above the maximum containment post-accident pressure and to provide a means for continuous or intermittent monitoring of the leakage status of the containment penetrations. No credit was taken for PPS operation in the calculation of off-site accident doses. ESR/MOD 95-00888 removed the automatic continuous pressurization and monitoring features of this system. The system is now only used during power operation to test the personnel hatch and during outages to test containment penetrations (local leak rate tests).

3.6.2 System Description (Figure 10)

The Penetration Pressurization System consists of four (4) air receivers. During normal operations only the A receiver is pressurized to 100 psig to maintain the ability to test the containment personnel hatch when necessary. The primary source of air for this system is the Instrument Air System . The plant Nitrogen System can provide a standby source of nitrogen pressure in the event Instrument Air pressure is not

INFORMATION USE ONLY

SAFEGUARD ACTUATION SIGNALS

ESF-FIGURE-5 (Rev . 0)

SAFEGUARD ACTUATION SIGNALS

NOTES:

1. TWO MOMENTARY PUSHBUTTONS: PRESS EITHER ONE TO ACTUATE
2. TWO MOMENTARY PUSHBUTTONS: PRESS BOTH TO ACTUATE
3. ONE MOMENTARY PUSHBUTTON PER LOOP
4. CV PRESS BISTABLES ENERGIZE TO ACTUATE - ALL OTHERS DE-ENERGIZE TO ACTUATE
5. ENCLOSED CIRCUITRY NOT PART OF SAFEGUARDS SYSTEMS AND NOT REDUNDANT
6. COMPONENTS ACTUATED BY CV ISOLATION PHASE A & B AND BY CV VENTILATION ISOLATION ARE ALL INDIVIDUALLY SEALED IN SO THAT LOSS OF THE ACTUATION SIGNAL WILL NOT CAUSE COMPONENTS TO RETURN TO ORIGINAL POSITION.
7. PC-950, -951A, 951B FED BY THE EDG AUTOMATICALLY ON BLACKOUT
8. COMPONENTS ACTUATED BY SI SIGNAL ARE ALL INDIVIDUALLY SEALED IN SO THAT LOSS OF SI SIGNAL WILL NOT CAUSE COMPONENTS TO RETURN TO ORIGINAL POSITIONS.
9. COMPONENTS ACTUATED BY SI, PHASE A, AND CV VENTILATION ISOLATION SIGNALS ARE INDIVIDUALLY SEALED IN SO THAT LOSS OF THE ACTUATION SIGNAL WILL NOT CAUSE COMPONENTS TO RETURN TO THE POSITION PRIOR TO ACTUATION SIGNAL

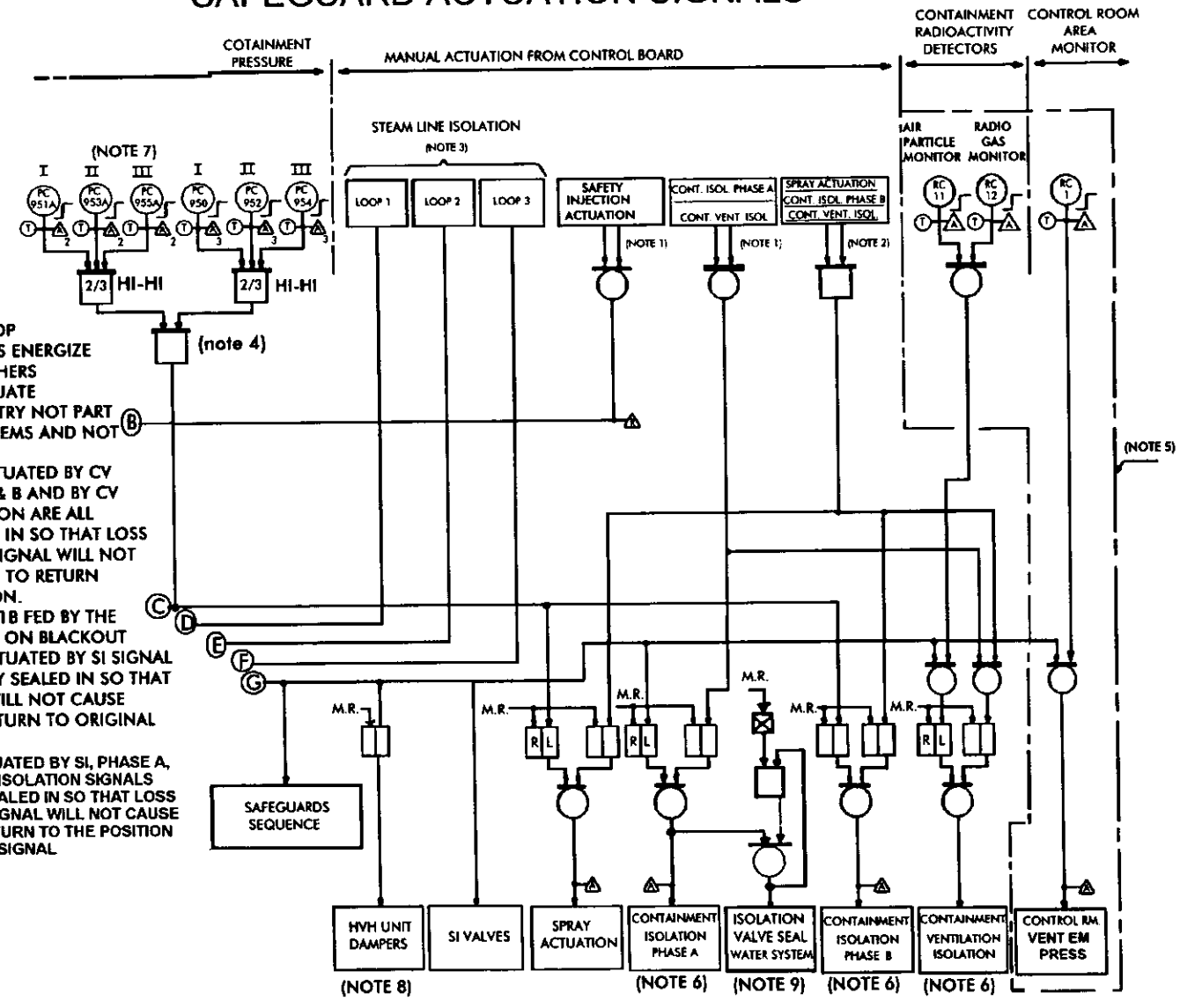

INFORMATION USE ONLY

CV-08 002

Which ONE (1) of the following correctly describes how IVSW can be manually initiated?

A. Depress Containment Phase "B" "INITIATE" pushbutton.

B. Depress the IVSW "INITIATE" pushbutton on the RTGB.

C. Depress the IVSW "INITIATE" pushbutton on the WDBRP.

✓D. Depress Safety Injection OR Containment Isolation (Phase A) "INITIATE" pushbutton(s).

Question: 10

Given the following conditions:

- The plant is operating at 100% power.
- A determination has been made that a primary-to-secondary leak of 0.06 gpm exists.

Which ONE (1) of the following would **NOT** be an indication of which S/G is leaking?

a. Steam Generator Blowdown Radiation Monitors (R-19A/B/C)

b. Steamline Radiation Monitors (R-31A/B/C)

c. Steam Generator Levels

d. Chemistry analysis of Steam Generators

Answer:

c. Steam Generator Levels

contradicts Q4 (dc)

due to AT power and 0.06 gpm won't see level

QUESTION NUMBER: 10
TIER/GROUP: 1/2

K/A: 038EA2.03
Ability to determine or interpret the following as they apply to a SGTR: Which S/G is ruptured

K/A IMPORTANCE: RO 4.4

10CFR55 CONTENT: 55.41(b) RO 11

OBJECTIVE: AOP-035-03
Demonstrate an understanding of selected steps, cautions, and notes in AOP-035 by explaining the basis of each.

REFERENCES: AOP-035

SOURCE: New **X** Significantly Modified Modified/Direct

Bank Number NEW

JUSTIFICATION:

a. Plausible since all distracters provide indications of larger tube leaks. Level will not be noted to be affected due to the extremely small size of the leak.

b. Plausible since all distracters provide indications of larger tube leaks. Level will not be noted to be affected due to the extremely small size of the leak.

c. **CORRECT** SG blowdown or steamline radiation monitors or chemistry analysis of SG samples for boron and activity should be used. Level will not be noted to be affected due to the extremely small size of the leak.

d. Plausible since all distracters provide indications of larger tube leaks. Level will not be noted to be affected due to the extremely small size of the leak.

DIFFICULTY:
Comprehensive/Analysis **X** Memory Rating 3

Analysis of effect of small SG tube leak on plant parameters.

REFERENCES SUPPLIED: NONE

STEP	INSTRUCTIONS	RESPONSE NOT OBTAINED
*21.	Check Leak Rate - GREATER THAN THE FOLLOWING LIMITS: • 500 gpd (0.34 gpm) FOR A SINGLE S/G OR • 1 gpm FOR ALL S/Gs	IF the leakrate exceeds the limits, THEN observe the NOTE prior to Step 22 and Go To Step 22. Go To Step 72.

NOTE

IF in Mode 1 OR 2, THEN the time for leakage reduction of 4 hours may be added to the time for achieving Mode 3 and Mode 5.

22.	Reduce Leakage To Within The Limits Within 4 HOURS	Be in Mode 3 within 6 hours AND be in Mode 5 within 36 hours.
23.	Identify Leaking S/G Using At Least One Of The Following Methods: • Evaluate indications on RI-19A, RI-19B, and RI-19C, STM GEN BLOW DN Radiation Monitors OR • Evaluate indications on R-31A, R-31B, and R-31C, STEAMLINE RADIATION MONITORs OR • Chemistry analysis of S/G samples for boron and activity	
24.	Implement The EALs	

Question: 11

ok

Which ONE (1) of the following identifies the Instrument Buses normally supplied by Inverters 'A' and 'B'?

	Inverter A	**Inverter B**
a.	IB 1	IB 2
b.	IB 2	IB 1
c.	IB 2	IB 3
d.	IB 3	IB 2

Answer:

c.	IB 2	IB 3

QUESTION NUMBER: 11
TIER/GROUP: 2/2

K/A: 062A3.04
Ability to monitor automatic operation of the ac distribution system, including: Operation of inverter

K/A IMPORTANCE: RO 2.7

10CFR55 CONTENT: 55.41(b) RO 7

OBJECTIVE: VAC-10
Explain the operation of the VAC Electrical System.

REFERENCES: SD-016
EDP-008

SOURCE: New Significantly Modified Modified/Direct **X**

Bank Number VAC-10 001

JUSTIFICATION:

a. Plausible since both instrument buses are vital buses. Inverter A supplies IB2 and Inverter B supplies IB3.
b. Plausible since both instrument buses are vital buses. Inverter B supplies IB3.
c. **CORRECT** This is the normal electrical alignment of inverters.
d. Plausible since both instrument buses are vital buses. Inverter A supplies IB2 and Inverter B supplies IB3.

DIFFICULTY:
Comprehensive/Analysis Memory **X** Rating 3

Knowledge of normal electrical system alignment.

REFERENCES SUPPLIED: NONE

120 VAC INSTRUMENT POWER SUPPLY

VAC-FIGURE-3 (Rev . 2)

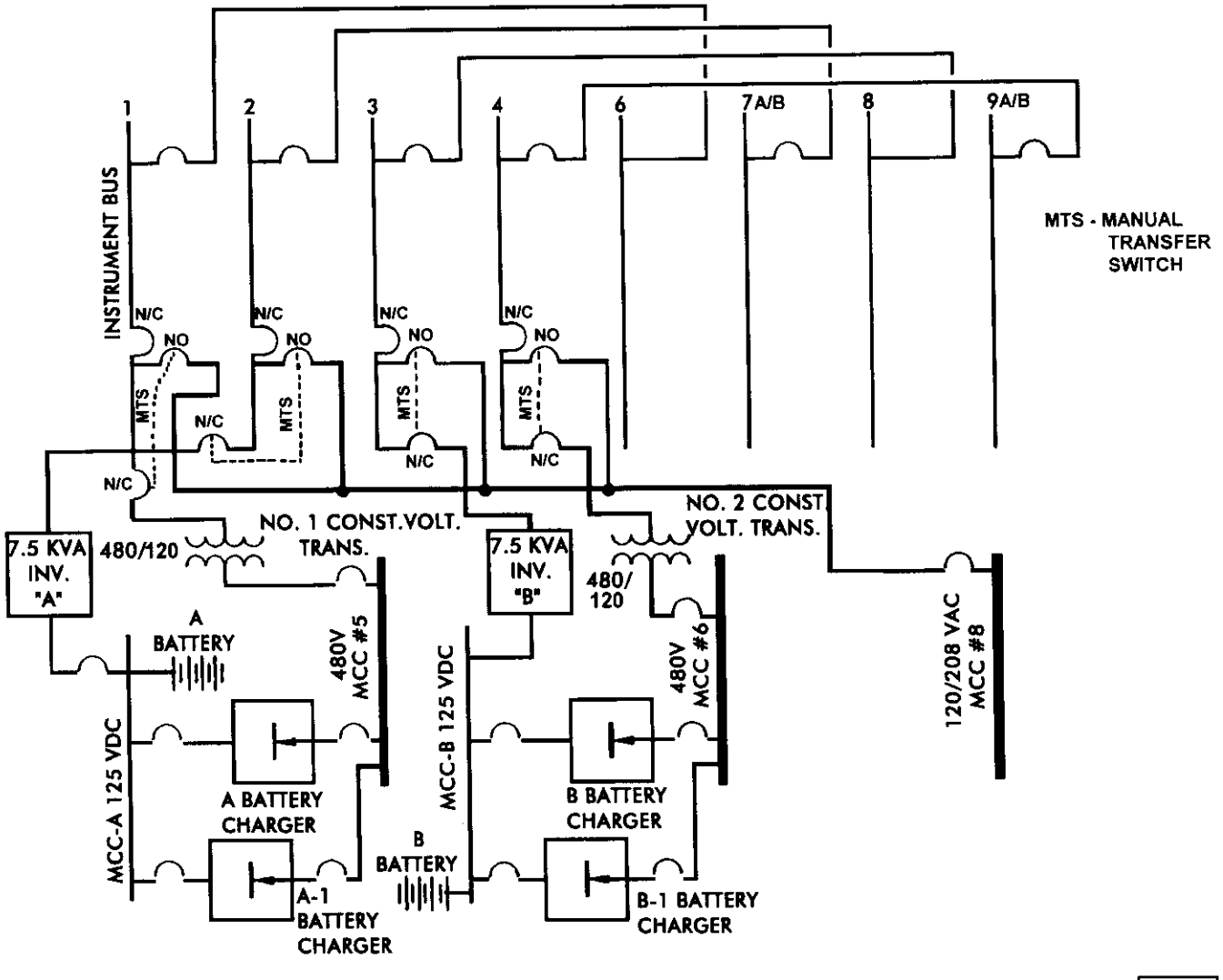

INFORMATION USE ONLY

3.11 5 KVA Inverter (See Figure 15)

The "C" Inverter is supplied by the 125Vdc via MCC-A. This inverter supplies PP-26. See Attachment 10.1 for specifications.

3.12 Plant Public Address System

The plant communication system consists of paging and a five channel party line communication system, capable of being in simultaneous use without interference between channels. These channels are set up as follows:

- Paging channel with low level input from one or more microphones and output to all loudspeakers (except those automatically muted) and one or more handset receivers.

- Party line telephone channels with low level input from one or more microphones and output to one or more handset receivers.

Each station is capable of originating and receiving communication by switching to either page channel or non-interfering party line channel.

The loudspeaker channel is used to "page" personnel over the loudspeakers. All speakers on the system receive the page calls and the speaker or speakers adjacent to the handset originating the page may be muted to eliminate acoustical feedback. The loudspeaker channel may also be used to issue plant-wide instructions or emergency warnings.

The five party line telephone channels used for conversation are not carried over the loudspeakers, thereby allowing simultaneous conversations on the party line and loudspeaker channel without interference.

The handset amplifier and speaker amplifier assemblies are completely transistorized and are powered by 115Vac. Each handset station has individual controls for setting page level and handset receiver level. Each speaker amplifier has individual controls for making volume level and tone adjustments. The system is powered from MCC-6 through PP-48 and is not available if MCC-6 is deenergized.

The P.A. System speakers are utilized for broadcasting the following plant alarms (produced by a signal generator which is part of the system):

INFORMATION USE ONLY

located and isolated within a reasonable period of time. However, if an additional phase to ground or a phase to phase fault occurs, protection devices will clear and isolate the fault. The high resistance ground system also includes a ground detection over voltage relay and alarm to identify that a ground fault does exist. When a phase to ground fault does occur, the Main Generator & Electrical Annunciator Panel (APP-009-C4, E7) (see Figure 2) located in the Control Room (CR) will alarm and identify which system, 480Vac and/or 4160Vac, has a fault. Both detection systems initiate the annunciation alarm due to induced voltage on the transformer neutral which occurs under fault conditions. Once a ground fault annunciation alarm has occurred, a process of elimination has to begin to locate the fault.

Engineered Safety Features (ESF) and plant shutdown auxiliaries are supplied from Emergency Buses E1 and E2. Buses E1 and E2 can also be supplied from Emergency Diesel Generators (EDGs) "A" and "B", respectively. Each of the two buses represents an independent power system with 100% emergency load capacity; each system has independent control power and logic. Train "A" control power and logic operates the Bus E1 system; train "B" control power and logic operates the Bus E2 system.

A further voltage reduction is accomplished by transformers to 208Vac for smaller loads including the boric acid heat tracing circuits.

Plant lighting is provided by 480/120Vac transformers from several different buses to provide reliability.

2.3.2 120Vac Instrument Bus System (See Figure 3)

The 120Vac instrumentation supply is split into 8 panels, known as Instrument Buses (IBs).

IBs 1, 2, 3, and 4 are 120Vac, single-phase (Ø) panels with single pole 'EB' or 'EHB' frame 100 amp supply breakers at the panel and contain single pole 'EB' or 'EHB' frame, 30 amp feeder breakers.

Each IB has a normal and alternate power supply with its supply breakers mechanically interlocked such that only one breaker may be closed for incoming feeds.

IBs 2 and 3 are normally fed from 125Vdc motor control center (MCC) -A and MCC-B respectively via their single-Ø fixed frequency inverters. IBs 1 and 4 are normally fed from 480Vac MCC-5 and MCC-6 respectively via their 480/120Vac constant voltage transformers. The alternate power supply for IBs 1, 2, 3 & 4 is 120Vac MCC-8.

INFORMATION USE ONLY

INSTRUMENT BUS NO. 2
Location: Safeguards Room, East Wall
Normal Power: Inverter "A" / Alternate Power: MCC-8 (2GL)

SPARE		Instrument Bus No.2 Power Supply (From INST BUS 2 PWR XFER SW)	
1	NIS Cabinet "B" (CWD-444)	2	NIS Cabinet "B" (CWD-444)
3	Hagan Rack 4 (CWD-476) Isolator Rack 29, Channel 2	4	Hagan Rack 7 (CWD-416)
5	Hagan Rack 9 (CWD-475)	6	Hagan Rack 11 (CWD-460)
7	Hagan Rack 12 (CWD-456)	8	Hagan Rack 13 (CWD-418)
9	RTGB A:TB-SM 27 and 28 RTGB C:TB-UE 45 and 46 (NOTE 1)	10	Quenching Valve Control
11	Instrument Bus No.7A and 7B	12	RMS console #1 receptacle (powers generator temp recorder) (CWD 877)
13	FIC-632, FIC-155 (CWD-488)	14	Lundell AC
15	Turning gear automatic control (CWD-731)	16	Waste Disposal System Panel Misc. Relays (CWD 367, 368)
17	MDAFW Pump "A" Flow control valve FCV-1424 (CWD-657)	18	PNL-Q-6-45V, PNL-Q-4-65V (CWD-966)

NOTE 1: CWD's 433, 443, 468, 481, 963, and 964.

INSTRUMENT BUS NO. 3

Location: Safeguards Room, East Wall

Normal Power: Inverter "B" / Alternate Power: MCC-8 (2GL)

SPARE		Instrument Bus No.3 Power Supply (From INST BUS 3 PWR XFER SW)	
1	NIS Cabinet "C" (CWD 446)	2	Hagan Rack 8 (CWD 417)
3	Hagan Rack 14 Isolator Rack 30, Channel 3	4	Hagan Rack 15 (CWD 457)
5	Hagan Rack 16 (CWD 418)	6	Hagan Rack 17 (CWD 421)
7	Hagan Rack 18 (CWD 422)	8	RTGB "C" TB-UE 42 and 43 RTGB "A" TB-SM 41 and 42 (NOTE 1)
9	AFW Pump "B" Flow Control Valve FCV-1425 (CWD 658)	10	Instrument Bus No. 8
11	Safeguards Rack 63 (CWD 420)	12	Safeguards Rack Status Lights (CWD 397)
13	FIC-635, FIC-154 (CWD-489)	14	FIC-638, FIC-657 (CWD-489)
15	Exhaust hood spray valves (CWD 761)	16	Governor Valves, Rotor Position and Speed (CWD 792) Net Gen Recorder
17	SPARE	18	Load, Frequency control panel (CWD 722)
19	NIS Cabinet "C" (2 Pole Bkr) (CWD 446)	20	Safeguards sequencing relays Train "B"
21		22	BLANK
23	Power Panel No. 26 Alternate Supply	24	BLANK
25	SPARE (3 Pole Bkr)	26	SPARE (3 Pole Bkr)
27		28	
29		30	

NOTE 1: CWD's 434, 963 and 964.

Question: 12

Given the following conditions:

- The unit is in Cold Shutdown.
- RCPs "A" and "C" are running.
- A Hydrogen Peroxide (H_2O_2) addition is being performed for crud burst cleanup.

Which ONE (1) of the following will be the result if TCV-143, VCT/DEMIN DIVERSION VALVE, is MANUALLY placed in the VCT position?

a. RCS boron concentration will decrease

b. H_2 levels in the RCS will increase

c. Activity levels in the Seal Injection Filters will increase

d. The RC filter will be required to be changed out LESS frequently

Answer:

c. Activity levels in the Seal Injection Filters will increase

QUESTION NUMBER: 12
TIER/GROUP: 1/1

K/A: 076AA2.02
Ability to determine and interpret the following as they apply to the High Reactor Coolant Activity: Corrective actions required for high fission product activity in RCS

K/A IMPORTANCE: RO 2.8

10CFR55 CONTENT: 55.41(b) RO 8

OBJECTIVE: CVCS-05
Describe the performance and design attributes of the major CVCS components.

REFERENCES: GP-007

SOURCE: New **X** Significantly Modified Modified/Direct

Bank Number NEW

JUSTIFICATION:

a. Plausible since placing demineralizers in service if not saturated with boron causes a change in RCS boron concentration. Only capable of changing boron concentration when in service.

b. Plausible since demineralizers provide a filtering medium and chemical removal of ions. Only capable of affecting RCS chemistry when in service.

c. **CORRECT** The demineralizers will be bypassed which results in less filtering of crud out of letdown and charging systems. Seal Injection Filters, as well as the RC filter, will filter the crud out and activity levels will rise.

d. Plausible since filters provide a point to remove resin which inadvertently escapes the demineralizers in the letdown stream. Without the mechanical filtration of the demineralizers, the filters will be required to remove greater amounts of crud and require more frequent changeout.

DIFFICULTY:
Comprehensive/Analysis **X** Memory Rating 3

Comprehension of the effects of the demineralizers on filtering crud.

REFERENCES SUPPLIED: NONE

CAUTION

The Demineralizer Purification Loop should be left in service during the H_2O_2 addition to prevent excess activity build up in the RC filter and Seal Injection Filters (CP-010).

NOTE: H_2O_2 is added as an oxidizing agent to facilitate crud removal. At least one RCP should remain in operation during the addition of H_2O_2 to ensure uniform crud removal in all RCS Loops.

8.2.48 **IF** this cooldown is for Refueling, **AND WHEN** RCS pressure is less than 350 psig **AND** RCS temperature is less than 200°F **AND** the PZR is solid, **THEN** perform the following:

1. Verify CLOSED CVC-311, AUX PZR SPRAY ____

NOTE: The preferred charging path is with CVC-310B open.

2. Open either CVC-310B, LOOP 2 COLD LEG CHG, **OR** CVC-310A, LOOP 1 HOT LEG CHG

   CVC-310B / CVC-310A ____
   (Circle one)

3. Verify TCV-143, VCT/DEMIN DIV, Switch is in AUTO. ____

4. Add H_2O_2 IAW OP-918. ____

5. Notify the Shift Chemistry Tech and the Inside AO that H_2O_2 addition will result in increased radiation levels in the CVCS and the RC Filter may require replacement at a more frequent interval. ____

8.2.49 Verify Letdown flow at the maximum rate without exceeding 120 gpm. ____

Question: 12

Given the following conditions:

- The unit is in Cold Shutdown.
- RCPs "A" and "C" are running.
- A Hydrogen Peroxide (H_2O_2) addition is being performed for crud burst cleanup.

Which ONE (1) of the following will be the result if TCV-143, VCT/DEMIN DIVERSION VALVE, is placed in the VCT position?

a. RCS boron concentration will decrease

b. H_2 levels in the RCS will increase

c. Activity levels in the Seal Injection Filters will increase

d. The RC filter will be required to be changed out LESS frequently

Answer:

c. Activity levels in the Seal Injection Filters will increase

Question: 13

Given the following conditions:

- A large break LOCA occurred at 1400.
- The SSO declared a Site Area Emergency at 1410.

Which ONE (1) of the following is the **LATEST** time to complete the associated action?

	REQUIRED ACTION	**LATEST TIME TO COMPLETE ACTION**
a.	Activate ERDS	1610
b.	Notify State and County Warning Points	1425
c.	Notify NRC	1425
d.	Notify INPO	1500

Answer:

b.	Notify State and County Warning Points	1425

QUESTION NUMBER: 13
TIER/GROUP: 2/1

K/A: 072G2.4.39
Knowledge of the RO's responsibilities in emergency plan implementation.

K/A IMPORTANCE: RO 3.3

10CFR55 CONTENT: 55.41(b) RO 10

OBJECTIVE: EP-214R-04
Demonstrate an understanding of the Robinson Emergency Plan IAW PLP-007 (use the following K/A's as guidance): 2.4.39 Knowledge of the RO's responsibilities in emergency plan implementation.

REFERENCES: EPCLA-01
EPCLA-02
EPNOT-01

SOURCE: New Significantly Modified **X** Modified/Direct

Bank Number EP-214R-02 001

JUSTIFICATION:

a. Plausible since ERDS is required within finite time period after declaration. Time selected is 2 hours after declaration, but ERDS must be activated within 1 hour of declaration.

b. **CORRECT** Initial notifications must be made within 15 minutes of declaration (1410 + 15 minutes = 1425).

c. Plausible since NRC notification is required within finite time period after declaration. Time selected is 15 minutes after declaration, but NRC must be notified as soon as possible following state/local notifications, but within 1 hour.

d. Plausible since INPO notification is required within finite time period after declaration. Time selected is 1 hour after event, but INPO must be notified within 2 hours of declaration.

DIFFICULTY:
Comprehensive/Analysis **X** Memory Rating 2

Calculation of time to initiate emergency communications.

REFERENCES SUPPLIED: NONE

8.1.3.8 (Continued)

c. Notifications are required within:

- 15 minutes of an initial classification, or
- 30-60 minutes for a follow up notification.

d. Conduct a roll call by agency to determine locations on line.

- Roll call is to determine that at least one representative from each agency is on line.

e. Document time of first voice contact and place a check next to locations contacted (i.e., items 1-4) on page 2 of the Notification Form (Attachment 8.1.5.1).

f. After the message has been reviewed with offsite agencies and any questions answered:

- Enter names, titles, times, and date of personnel on line. This time will be the "start" time for the follow up notification.

9. The Control Room Staff will augment the Emergency Response Organization, as appropriate, by:

a. The assigned person will obtain a copy of Attachment 8.1.5.4, Automated ERO Notification Form (Dialogic) to initiate the system.

b. Enter the current date and time on the form.

8.2.1 **PURPOSE**

1. To provide instructions for the use of the Emergency Action Levels (EALs) and to describe the transition from the EAL flowpaths to this procedure.

8.2.2 **RESPONSIBILITIES**

N/A

8.2.3 **INSTRUCTIONS**

1. Declarations

   a. General Emergency: IF at any time during progression through the EAL flowpath, a General Emergency declaration is warranted, THEN the Site Emergency Coordinator/Superintendent Shift Operations (SEC/SSO) is to immediately declare a General Emergency AND carry out the actions specified by the procedure.

   b. IF an event (other than a General Emergency) is warranted, THEN the SEC/SSO is to continue through the flowpath, after noting it on the "EAL STATUS Board."

   c. The highest indicated level will be declared upon completion of the flowpath.

2. Entering the Flowpath

   a. The flowpath can be entered at the discretion of the SEC/SSO.

   b. It is appropriate for the Superintendent Shift Operations (SSO) to defer entry into the flowpath early in an event in order to direct his attention and expertise to ensuring proper diagnosis by the operating shift and that proper actions are being taken to combat the casualty. However, because timely event classification is essential to protecting the public, once the SSO is satisfied the response is adequate for the situation, he should immediately enter the flowpath to classify the event and initiate any required augmentation.

   c. It is the expectation that the time between exceeding an EAL and declaration of the event will not exceed 15 minutes unless extraordinary conditions prevail. (CR 97-02306)

8.1.3.8 (Continued)

c. Notifications are required within:

- 15 minutes of an initial classification, or
- 30-60 minutes for a follow up notification.

d. Conduct a roll call by agency to determine locations on line.

- Roll call is to determine that at least one representative from each agency is on line.

e. Document time of first voice contact and place a check next to locations contacted (i.e., items 1-4) on page 2 of the Notification Form (Attachment 8.1.5.1).

f. After the message has been reviewed with offsite agencies and any questions answered:

- Enter names, titles, times, and date of personnel on line. This time will be the "start" time for the follow up notification.

9. The Control Room Staff will augment the Emergency Response Organization, as appropriate, by:

a. The assigned person will obtain a copy of Attachment 8.1.5.4, Automated ERO Notification Form (Dialogic) to initiate the system.

b. Enter the current date and time on the form.

8.1.3 (Continued)

12. If a General Emergency has been declared, formulate a protective Action Recommendation (PAR).

    a. Use guidance in Attachments 8.1.5.1, Initial Protective Action Recommendation Flowchart and Attachment 8.1.5.3, PAR Affected Zones Based on Wind Direction to formulate the initial recommendation and zones to be evacuated based on wind direction.

    b. Subsequent PARs are made by comparing dose projections and environmental monitoring results to Attachment 8.1.5.2, Protective Action Guidelines (PAG) and upgrading the initial recommendations as necessary.

13. Develop and transmit an initial Emergency Notification Form to at least one State and County agency within 15 minutes of emergency declaration.

    a. Follow up notifications are required at least every 30-60 minutes.

14. Within one hour of an Alert (or above) declaration, activate the Emergency Response Data System (ERDS) as noted below:

    a. If the ERDS is not currently operational (ERDS = NORMAL is not displayed at the bottom of an ERFIS terminal), the SEC will ensure that ERDS is activated. Any problems should be reported to Information Technology personnel.

    b. Display the ERDS activation screen by:

        - Depressing the ERDS key on the ERFIS keyboard, or
        - Typing the Turn-On-Code "ERDS" at the input field, or
        - Selecting ERDS from the EP Menu.

CR EMERGENCY COMMUNICATOR QUICK START GUIDE

NOTE: Blanks are provided for place keeping √'s only, logs are the official record. This is a summary level guide and does not replace the procedure steps.

Equipment	Equipment	Copies:
Fax Machine	EC Book	8.1.5.1 (ENF and roll call form)
ERO Phonebook	EP Procedures	8.1.5.2 (Communications Checklist)
Dialogic Password Card	CR SSO Terminal	8.1.5.3 (Communications Log)
FTS 2000 Phone	Selective Signaling	8.1.5.4 (Dialogic)
CR Beeper		8.1.5.12 (Event Notification Worksheet)

1. Log on to EDS (CRSS terminal), If not operable then use manual Emergency Notification form and fax by hand. _____
   F3 → EP Functions → Login (as CRSS and name) → Declare Event

2. Complete EP Notification Form (Attachment 8.1.5.1) _____
   Primary Notification Process
   - Fax to off site agencies by clicking on "FAX" on the form.
   - Contact State and County agencies on Selective Signaling (Dial A1)
     - Press to Talk

   Alternate Notification Process
   - Use Northern Telecommunications Phones (Attachment 8.1.5.7)
   - Use ESSX (Attachment 8.1.5.6)
   - Call Roll → Read Message and Authenticate if required (codes in EC Book)

3. ERO Callout: _____
   Complete form (Attachment 8.1.5.4)
   SSO/SEC approval
   Dialogic not functional? → Manual beeper initiation (Attachment 8.1.5.11)
   → Contact NREC for non-beeper staff (ERO phonebook)

4. NRC Notification per EPNOT-04 _____

5. Alert or above? Notify ANI and INPO within 2 hours. _____

6. Terminate Beeper Callouts with 0*0*0 _____

8.1.3 (Continued)

13. Make follow up notifications to the State and County agencies:

    a. Follow up notifications are required:

        - Every 30 - 60 minutes, or

        - for any event which could increase or decrease public safety or affect protective action recommendations. Examples include fires, bomb threats, changes in release rate greater than 15% of previously reported value, site evacuations, entry into recovery operations, etc.

14. If the classification is Alert or higher, make notifications to American Nuclear Insurers (ANI) and the Institute of Nuclear Power Operations (INPO).

    a. Notifications are required within 2 hours.

    b. Off site phone numbers are available in the ERO phone book.

15. Obtain responses for questions from offsite agencies.

    a. Information not contained on status boards or concerning future status of the plant must be approved by the SEC/ERM or ERM depending on facility activation status.

16. If the TSC and EOF are activating, perform a turnover with NRC and EOF Emergency Communicators.

    a. Ensure completion times of the last notification (i.e., the Emergency Notification Form) are available, via fax or electronic means, for the EOF Communications Staff.

17. Upon event termination, ensure notification of off site agencies which have activated.

18. Inform the Information Technology group of system use (on next business day if weekend, holiday or nightshift) so the databases may be cleared. This maintains the system ready for the next use. This notification may be accomplished via e-mail or telephone.

COMMUNICATIONS CHECKLIST

Event Classification:
___ Unusual Event ___ Alert ___ Site Area Emergency ___ General Emergency

Required Emergency Notifications

Time Declared	Maximum Contact Time (Min.)	Notif. Due By	Notif. Complete	Follow-up Due w/in	Agency	Phone/ Backup
_____	+ 15 = ASAP and no greater than 15	_____	_____ State _____ Darling _____ Lee _____ Chester	30-60 minutes	Counties WP & EOC State Warning Point & Backup Warning Point	Sel. Sig. A1 (See ERO Phone Book for back-up numbers)
_____	+ 60 = ASAP and no greater than 60	_____	_____	As needed	NRC	FTS 2000 See sticker or Emergency Response Phone Book

Recommended Emergency Notifications

Time Declared	Contact Time (Min.)	Notif. Due By	Notif. Complete	Follow-up Due w/in	Agency	Phone/ Backup
_____	+ 60 =	_____	_____	As Needed	NRC Site Inspector	See Emergency Response Phone Book
Following applicable to ALERT or higher classification only						
_____	+ 120 =	_____	_____	As Needed	ANI	See Emergency Response Phone Book
_____	+ 120 =	_____	_____	As Needed	INPO	See Emergency Response Phone Book

Instructions: This form may be used for each change in event classification.

Replace
make it problem to
be solved

Question: 13

The SSO has declared an ALERT condition at 0200.

The initial notifications of this event must be communicated by the Control Room Communicator by NO LATER THAN ...

a. 0215.

b. 0230.

c. 0300.

d. 0600.

Answer:

a. 0215.

QUESTION NUMBER: 13
TIER/GROUP: 2/1

K/A: 072G2.4.39
Knowledge of the RO's responsibilities in emergency plan implementation.

K/A IMPORTANCE: RO 3.3

10CFR55 CONTENT: 55.41(b) RO 10

OBJECTIVE: EP-214R-04
Demonstrate an understanding of the Robinson Emergency Plan IAW PLP-007 (use the following K/A's as guidance): 2.4.39 Knowledge of the RO's responsibilities in emergency plan implementation.

REFERENCES: EPNOT-1

SOURCE: New Significantly Modified Modified/Direct **X**

Bank Number EP-214R-02 001

JUSTIFICATION:

a. **CORRECT** Initial notifications must be made within 15 minutes. 0200 + 15 minutes = 0215.
b. Plausible since follow up notifications are required within 30 to 60 minutes. 0200 + 30 minutes = 0230.
c. Plausible since follow up notifications are required within 30 to 60 minutes. 0200 + 60 minutes = 0300.
d. Plausible since many events require 4 hour notifications. 0200 + 4 hours = 0600.

DIFFICULTY:
Comprehensive/Analysis **X** Memory Rating 2

Calculation of time to initiate emergency communications.

REFERENCES SUPPLIED: NONE

Question: 14

Given the following conditions:

- The plant is operating at 100% power.
- RCP "B" #1 Seal Leakoff goes offscale high (greater than 6 gpm).
- RCP "A" and RCP "C" #1 Seal Leakoffs go off scale low.

Which ONE (1) of the following describes the major actions to be taken?

a. Reduce Reactor power to < 40%, then stop RCP "B"

b. Reduce Reactor power to < 10%, then stop RCPs "A" and "C"

c. Trip the Reactor, then stop RCP "B"

d. Trip the Reactor, then stop RCPs "A" and "C".

Answer:

c. Trip the Reactor, then stop RCP "B"

QUESTION NUMBER: 14
TIER/GROUP: 1/1

K/A: 015/017G2.1.7
Ability to evaluate plant performance and make operational judgments based on operating characteristics, reactor behavior, and instrument interpretation. (RCP Malfunctions)

K/A IMPORTANCE: RO 3.7

10CFR55 CONTENT: 55.41(b) RO 10

OBJECTIVE: AOP-018-08
Given plant conditions, evaluate the appropriate actions to mitigate consequences of Reactor Coolant Pump Abnormal Condition as directed by steps in AOP-018.

REFERENCES: AOP-018

SOURCE: New Significantly Modified Modified/Direct **X**

Bank Number AOP-018-08 005

JUSTIFICATION:

a. Plausible since this action is taken in cases where pump is not required to be emergency stopped. RCP must be immediately stopped with this failure.

b. Plausible if misconception is that unaffected RCPs are actually failed since this power level is point where at power trips are automatically blocked. Failed RCP is actually RCP "B".

c. **CORRECT** Trip requirements are greater than 5.7 gpm leakoff on affected pump with a decrease in leakoff on unaffected pumps.

d. Plausible if misconception is that unaffected RCPs are actually failed since this would be required if these pumps were failed. Failed RCP is actually RCP "B".

DIFFICULTY:
Comprehensive/Analysis **X** Memory Rating 3

Analysis of given data to determine failed pump and subsequent required actions based upon analysis.

REFERENCES SUPPLIED: NONE

PSA RELATED

STEP	INSTRUCTIONS	RESPONSE NOT OBTAINED

SECTION A

REACTOR COOLANT PUMP SEAL FAILURE

(Page 1 of 11)

* 1.	Check Any RCP #1 Seal Leakoff Flow - GREATER THAN 5.7 GPM	IF seal leakoff exceeds 5.7 gpm, THEN Go To Step 2. Go To Step 8.
2.	Check Either Of The Following Conditions Exist: • RCP #1 Seal Leakoff Flow On Unaffected RCP(s) - DECREASED OR • RCP Thermal Barrier ΔP On Affected RCP(s) - DECREASED	Perform the following: a. Perform cross-check of all RCP parameters to determine cause of indicated high leakoff flow. b. Observe The NOTE Prior To Step 1 and Go To The Main Body, Step 1 Of This Procedure

****

CAUTION

To prevent damage to the RCP Seal Stack, the affected RCP Seal Leakoff Isolation valve must be closed between 3 minutes and 5 minutes of stopping the RCP.

****

3.	Check Plant Status - MODE 1	Stop the affected RCP(s) Observe the CAUTION prior to Step 5 and Go To Step 5.
4.	Perform The Following: a. Trip the reactor b. Trip the affected RCP(s) c. Go To Path-1 while continuing with this procedure.	

Question: 15

While performing OST-012, "Power Range Calorimetric During Power Operation (Manual) Daily," Which ONE (1) of the following will result in ACTUAL power being **HIGHER THAN** INDICATED power?

a. S/G Blowdown was secured prior to starting the data collection.

b. MDAFW Pump 'A' is operating with flow being delivered to a S/G.

c. Indicated feedwater temperature used was lower than actual.

d. Indicated feedwater flow used was higher than actual.

Answer:

b. MDAFW Pump 'A' is operating with flow being delivered to a S/G.

QUESTION NUMBER: 15
TIER/GROUP: 2/1

K/A: 015K5.04
Knowledge of the operational implications of the following concepts as they apply to the NIS: Factors affecting accuracy and reliability of calorimetric calibrations

K/A IMPORTANCE: RO 2.6

10CFR55 CONTENT: 55.41(b) RO 6

OBJECTIVE: NI-10
Explain the operation of the Nuclear Instrumentation System.

REFERENCES: OST-012

SOURCE: New Significantly Modified **X** Modified/Direct

Bank Number NI-10 010

JUSTIFICATION:

a. Plausible since blowdown is a consideration in the calorimetric. Has no effect provided no changes are made to blowdown during the data collection period.

b. **CORRECT** AFW flow is not accounted for in the calorimetric. The amount of heat actually required to raise AFW temperature to saturation would be ignored, thereby causing calculated power (and indicated after adjustment) to be lower than actual.

c. Plausible since feed temperature is a consideration in the calorimetric. If indicated feed temperature was lower than actual, the calculation (and indicated power) would require more heat to raise temperature, so it would be higher than actual.

d. Plausible since feed flow is a consideration in the calorimetric. If indicated feed flow was higher than actual, more heat would be required to raise the additional feed flow to saturation, so calculated (indicated) would be higher than actual.

DIFFICULTY:
Comprehensive/Analysis **X** Memory Rating 4

Analysis of the effects of various inputs to the calorimetric calibration

REFERENCES SUPPLIED: NONE

4.3 Any steps not applicable shall be marked N/A and the reason(s) noted in the Comments Section of Attachment 8.3.

4.4 Reactor Engineering and the Manager - Operations will be notified prior to making adjustments of greater than 2% to a NI channel. (CR 98-01362)

4.5 Reactor Engineering or the Manager - Operations will be contacted for assistance prior to adjusting the NI's during any power or Xenon transient.

4.6 Rounding off the readings taken on the PR nuclear instruments shall be IAW the following guidelines (CR 93-15019):

4.6.1 IF indicated power is less than 100%, THEN round down to the nearest 0.5% increment (EXAMPLES: a reading of 99.7 would be recorded as 99.5, and 99.3 would be recorded as 99.0).

4.6.2 IF indicated power is greater than 100%, THEN round up to the nearest 0.5% increment (EXAMPLES: a reading of 100.2 would be recorded as 100.5, and 100.6 would be recorded as 101).

4.7 If this OST is being performed due to ERFIS being inoperable, then I&C personnel may be required to collect the Feedwater temperature data.

4.8 This procedure has been screened in accordance with PLP-037 criteria and determined not applicable (N/A) to PLP-037.

4.9 When adjusting an NI Power Range gain with another OOS, extreme care must be utilized. Any electronic spiking has the potential of causing a Reactor Protection System actuation. (CR 97-01677)

4.10 Inaccuracies in the calorimetric increase in magnitude when less than 70% power. Reactor Engineering should be notified prior to adjusting any power range channel down when less than 70% to reduce the probability of non-conservative operation. It is allowable to raise indicated power to match calculated power. (CR 98-01362)

4.11 Operation of any MDAFW Pump with AFW Flow to a S/G will cause the calorimetric to be non-conservative. Do not perform a calorimetric when a MDAFW Pump is in service and flowing to a S/G. (CR 96-01991)

NI-10 010

Given the following plant conditions:

- Mode 1 at 100% RTP
- An NAS Assessment identifies that the feedwater temperature indicators are inaccurate
- It is determined that the feedwater temperature detectors show an indicated temperature that is LOWER than ACTUAL
- These readings were used in OST-10, POWER RANGE CALORIMETRIC DURING POWER OPERATION DAILY
- The power range detectors were adjusted using the OST

Which ONE (1) of the following correctly describes the results of the feedwater error on the power range calorimetric?

Indicated power is _____than calculated power causing a _____conservative NI setting.

A. LOWER; MORE

✓B. HIGHER; MORE

C. LOWER; LESS

D. HIGHER; LESS

ok

Question: 16

Given the following conditions:

- Unit 2 is operating at 100% power.
- CST level is 29% (40,000 gallons available).
- EDG "A" is out of service.
- RWST level is 89% (293,000 gallons available).
- SI Accumulator pressure is 612 psig.

Which ONE (1) of the following must be restored within one (1) hour, in accordance with Technical Specifications?

a. CST level

b. EDG "A"

c. RWST level

d. SI Accumulator pressure

Answer:

c. RWST level

QUESTION NUMBER: 16
TIER/GROUP: 3

K/A: 2.1.12
Ability to apply technical specifications for a system.

K/A IMPORTANCE: RO 2.9

10CFR55 CONTENT: 55.41(b) RO 10

OBJECTIVE: SI-12
State the Technical Specification Limitations and explain the bases for the Safety Injection System.

REFERENCES: Tech Spec 3.5.1
Tech Spec 3.5.4
Tech Spec 3.7.5
Tech Spec 3.8.1

SOURCE: New Significantly Modified **X** Modified/Direct

Bank Number SI-13 006

JUSTIFICATION:

a. Plausible since CST level is a required TS item . Required level is 35,000 gallons (26%) so LCO is met.

b. Plausible since EDGs are required TS item and certain surveillances are required to be performed within 1 hour. Required time to restore is 7 days.

c. **CORRECT** Required RWST level is 300,000 gallons (91%). Time to restore is 1 hour.

d. Plausible since SI accumulator pressure is below the low pressure alarm setpoint. Pressure does meet TS minimum.

DIFFICULTY:
Comprehensive/Analysis Memory **X** Rating 2

Knowledge of 1-hour TS limiting conditions for operations.

REFERENCES SUPPLIED: NONE

3.5 EMERGENCY CORE COOLING SYSTEMS (ECCS)

3.5.1 Accumulators

LCO 3.5.1 Three ECCS accumulators shall be OPERABLE.

APPLICABILITY: MODES 1 and 2,
MODE 3 with pressurizer pressure > 1000 psig.

ACTIONS

CONDITION	REQUIRED ACTION	COMPLETION TIME
A. One accumulator inoperable due to boron concentration not within limits.	A.1 Restore boron concentration to within limits.	72 hours
B. One valve identified in SR 3.5.1.5 with control power restored.	B.1 Verify control power or air is removed to all valves identified in SR 3.5.2.1 and SR 3.5.2.7.	Immediately
	AND	
	B.2 Remove control power to valve.	4 hours
C. One accumulator inoperable for reasons other than Condition A.	C.1 Restore accumulator to OPERABLE status.	4 hours

(continued)

3.5 EMERGENCY CORE COOLING SYSTEMS (ECCS)

3.5.4 Refueling Water Storage Tank (RWST)

LCO 3.5.4 The RWST shall be OPERABLE.

APPLICABILITY: MODES 1, 2, 3, and 4.

ACTIONS

CONDITION	REQUIRED ACTION	COMPLETION TIME
A. RWST boron concentration not within limits. OR RWST borated water temperature not within limits.	A.1 Restore RWST to OPERABLE status.	8 hours
B. RWST inoperable for reasons other than Condition A.	B.1 Restore RWST to OPERABLE status.	1 hour
C. Required Action and associated Completion Time not met.	C.1 Be in MODE 3. AND C.2 Be in MODE 5.	6 hours 36 hours

SURVEILLANCE REQUIREMENTS

SURVEILLANCE		FREQUENCY
SR 3.5.4.1	----------NOTE---------- Only required to be performed when ambient air temperature is < 45°F or > 100°F. ---------- Verify RWST borated water temperature is ≥ 45°F and ≤ 100°F.	24 hours
SR 3.5.4.2	Verify RWST borated water volume is ≥ 300,000 gallons.	7 days
SR 3.5.4.3	Verify RWST boron concentration is ≥ 1950 ppm and ≤ 2400 ppm.	7 days

3.7 PLANT SYSTEMS

3.7.5 Condensate Storage Tank (CST)

LCO 3.7.5 The CST level shall be ≥ 35,000 gal and the backup Service Water System (SWS) supply to the AFW system shall be OPERABLE.

APPLICABILITY: MODES 1, 2, and 3,
MODE 4 when a steam generator is being used for heat removal.

ACTIONS

CONDITION	REQUIRED ACTION		COMPLETION TIME
A. CST level not within limit.	A.1	Verify by administrative means OPERABILITY of backup water supply.	4 hours AND Once per 12 hours thereafter
	AND		
	A.2	Restore CST level to within limit.	24 hours
B. Required Action and associated Completion Time not met.	B.1	Be in MODE 3.	6 hours
	AND		
	B.2	Be in MODE 4, without reliance on steam generator for heat removal.	18 hours

(continued)

ACTIONS (continued)

CONDITION	REQUIRED ACTION	COMPLETION TIME
B. (continued)	B.4 Restore DG to OPERABLE status.	7 days AND 8 days from discovery of failure to meet LCO
C. Required Action and associated Completion Time of Condition A or B not met.	C.1 Be in MODE 3. AND C.2 Be in MODE 5.	6 hours 36 hours
D. Two or more AC sources inoperable.	----------NOTE---------- Entry into this Required Action may be delayed for no greater than 2 hours during performance of Required Action B.3.1 and Required Action B.3.2.2. ---------- D.1 Enter LCO 3.0.3.	 Immediately

SI-13 006

Given the following plant conditions:

- The unit is operating at 100% power
- Containment pressure is +0.9 psig
- CST level is 30,000 gal
- RWST level is 295,000 gal
- IVSW tank level is 70 gal

Which ONE (1) of the following actions would be required by Technical Specifications in order to continue operation at 100% power?

A. Restore Containment pressure to within limits within 1 hour.

B. Restore CST level to within limits within 6 hours.

✓C. Restore RWST level to within limits within 1 hour.

D. Restore IVSW tank level to within limits within 6 hours.

Question: 17

Given the following conditions:

- Unit 2 is operating at 20% power.
- System Engineering notifies the Control Room that a generic issue requires declaring ALL AFW pumps inoperable.

In accordance with Technical Specifications, which ONE (1) of the following describes the IMMEDIATE ACTIONS and the UNIT STATUS required?

	IMMEDIATE ACTIONS	**UNIT STATUS**
a.	Initiate action to restore at least one (1) AFW Pump	Maintain in MODE 1
b.	Initiate action to restore at least two (2) AFW Pumps	Place in MODE 2
c.	Initiate action to restore at least one (1) AFW Pump	Place in MODE 3
d.	Initiate action to restore at least two (2) AFW Pumps	Place in MODE 4

Answer:

a.	Initiate action to restore at least one (1) AFW Pump	Maintain in MODE 1

QUESTION NUMBER: 17
TIER/GROUP: 1/2

K/A: WE05G2.2.22
Knowledge of limiting conditions for operations and safety limits. (Loss of Heat Sink)

K/A IMPORTANCE: RO 3.4

10CFR55 CONTENT: 55.41(b) RO 10

OBJECTIVE: AFW-12
State the Technical Specification Limitations and explain the bases for the AFW.

REFERENCES: Tech Spec 3.7.4
Tech Spec 3.7.4 Basis

SOURCE: New **X** Significantly Modified Modified/Direct

Bank Number NEW

JUSTIFICATION:

a. **CORRECT** The unit is in a seriously degraded condition with no safety related means for conducting a cooldown, and only limited means for conducting a cooldown with nonsafety related equipment. In such a condition, the unit should not be perturbed by any action, including a power change, that might result in a trip. Immediate actions are to be taken to restore at least 1 AFW pump to operable status.

b. Plausible since plant is currently in Mode 1, condition is applicable in Modes 1-3, and this is a lower mode than current mode. No power changes should be performed and immediate actions are to be taken to restore at least 1 AFW pump to operable status.

c. Plausible since plant is currently in Mode 1, condition is applicable in Modes 1-3, and this is a lower mode than current mode. Additionally, no power is being produced in Mode 3. No power changes should be performed and immediate actions are to be taken to restore at least 1 AFW pump to operable status.

d. Plausible since plant is currently in Mode 1, condition is applicable in Modes 1-3, and this is a lower mode than applicable modes. No power changes should be performed and immediate actions are to be taken to restore at least 1 AFW pump to operable status.

DIFFICULTY:
Comprehensive/Analysis **X** Memory Rating 4

Analysis of plant conditions to determine application of required actions during power operations with a complete loss of AFW.

REFERENCES SUPPLIED: NONE

3.7 PLANT SYSTEMS

3.7.4 Auxiliary Feedwater (AFW) System

LCO 3.7.4 Four AFW flow paths and three AFW pumps shall be OPERABLE.

----------NOTE----------
Only one AFW flow path with one motor driven pump is required to be OPERABLE in MODE 4.

APPLICABILITY: MODES 1, 2, and 3,
MODE 4 when steam generator is being used for heat removal.

ACTIONS

CONDITION	REQUIRED ACTION	COMPLETION TIME
A. One AFW pump inoperable in MODE 1, 2, or 3. OR One or two AFW flow paths inoperable in MODE 1, 2, or 3.	A.1 Restore AFW pump or flow path(s) to OPERABLE status.	7 days AND 8 days from discovery of failure to meet the LCO
B. Two motor driven AFW pumps inoperable in MODE 1, 2, or 3. OR Three motor driven AFW flow paths inoperable in MODE 1, 2, or 3.	B.1 Restore one motor driven AFW pump or one flow path to OPERABLE status.	24 hours AND 8 days from discovery of failure to meet the LCO

(continued)

CONDITION	REQUIRED ACTION		COMPLETION TIME
C. Required Action and associated Completion Time for Condition A or B not met.	C.1	Be in MODE 3.	6 hours
	AND		
	C.2	Be in MODE 4.	18 hours
D. Steam driven AFW pump or flow path inoperable in MODE 1, 2, or 3. AND One motor driven AFW pump or flow path inoperable in MODE 1, 2, or 3.	D.1	Be in MODE 3.	6 hours
	AND		
	D.2	Be in MODE 4.	18 hours
E. Four AFW flow paths inoperable in MODE 1, 2, or 3. OR Three AFW pumps inoperable in MODE 1, 2, or 3.	E.1	---------NOTE-------- LCO 3.0.3 and all other LCO Required Actions requiring MODE changes are suspended until one AFW pump and flow path are restored to OPERABLE status. ---------- Initiate action to restore one AFW pump and flow path to OPERABLE status.	Immediately
F. Required AFW pump and flow path inoperable in MODE 4.	F.1	Initiate action to restore AFW pump and flow path to OPERABLE status.	Immediately

BASES

ACTIONS (continued)

D.1 and D.2

With the steam driven AFW pump or flow path and one motor driven pump or flow path inoperable, a diverse and redundant means of supplying AFW to the steam generators is lost. One motor driven AFW pump and at least one flow path remains in service to provide injection capability to at least one steam generator; however, redundant capability to feed at least two steam generators is not assured. Action must be taken to place the unit in a MODE in which the LCO does not apply. To achieve this status, the unit must be placed in at least MODE 3 within 6 hours, and in MODE 4 within 18 hours.

The allowed Completion Times are reasonable, based on operating experience, to reach the required unit conditions from full power conditions in an orderly manner and without challenging unit systems.

In MODE 4 with only one motor driven AFW pump and flow path operable, operation is allowed to continue because only one motor driven AFW pump and flow path is required in accordance with the Note that modifies the LCO. Although not required, the unit may continue to cool down and initiate RHR.

E.1

If all three AFW pumps or all four AFW flow paths are inoperable in MODE 1, 2, or 3, the unit is in a seriously degraded condition with no safety related means for conducting a cooldown, and only limited means for conducting a cooldown with nonsafety related equipment. In such a condition, the unit should not be perturbed by any action, including a power change, that might result in a trip. The seriousness of this condition requires that action be started immediately to restore one AFW train to OPERABLE status.

Required Action E.1 is modified by a Note indicating that all required MODE changes or power reductions are suspended until one AFW train is restored to OPERABLE status. In this case, LCO 3.0.3 is not applicable because it could force the unit into a less safe condition.

(continued)

Question: 17

Given the following conditions:

- Unit 2 is operating at 20% power.
- System Engineering notifies the Control Room that a generic issue requires declaring ALL AFW pumps inoperable.

Immediate actions must be taken to restore at least one (1) AFW pump to operable status and the unit should be in mode:

a. ~~maintained in MODE~~ 1.

b. ~~placed in MODE~~ 2.

c. ~~placed in MODE~~ 3.

d. ~~placed in MODE~~ 4.

Answer:

a. maintained in MODE 1.

QUESTION NUMBER: 17
TIER/GROUP: 1/2

K/A: WE05G2.2.22
Knowledge of limiting conditions for operations and safety limits. (Loss of Heat Sink)

K/A IMPORTANCE: RO 3.4

10CFR55 CONTENT: 55.41(b) RO 10

OBJECTIVE: AFW-12
State the Technical Specification Limitations and explain the bases for the AFW.

REFERENCES: Tech Spec 3.7.4
Tech Spec 3.7.4 Basis

SOURCE: New **X** Significantly Modified Modified/Direct

Bank Number NEW

JUSTIFICATION:

a. **CORRECT** The unit is in a seriously degraded condition with no safety related means for conducting a cooldown, and only limited means for conducting a cooldown with nonsafety related equipment. In such a condition, the unit should not be perturbed by any action, including a power change, that might result in a trip.

b. Plausible since plant is currently in Mode 1, condition is applicable in Modes 1-3, and this is a lower mode than current mode. No power changes should be performed.

c. Plausible since plant is currently in Mode 1, condition is applicable in Modes 1-3, and this is a lower mode than current mode. Additionally, no power is being produced in Mode 3. No power changes should be performed.

d. Plausible since plant is currently in Mode 1, condition is applicable in Modes 1-3, and this is a lower mode than applicable modes. No power changes should be performed.

DIFFICULTY:
Comprehensive/Analysis **X** Memory Rating 4

Analysis of plant conditions to determine application of required actions during power operations with a complete loss of AFW.

REFERENCES SUPPLIED: NONE

Question: 18

Which ONE (1) of the following provides the indication you would expect to see if **NO** ground was present while checking for DC Bus grounds using Battery Charger "A-1"?

a. Ground Detection voltmeter reads 65 volts

b. DC Output voltmeter reads 65 volts

c. Ground detection light illuminated → IS THERE A GROUND DETECTION LIGHT?

d. Ground fault relay flag indicates reset

IF NOT → CHECK TO LIGHT NOT ILLUMINATED BECAUSE THERE IS NO LIGHT.

Answer:

b. DC Output voltmeter reads 65 volts

QUESTION NUMBER: 18
TIER/GROUP: 2/2

K/A: 063A3.01
Ability to monitor automatic operation of the dc electrical system, including: Meters, annunciators, dials, recorders, and indicating lights

K/A IMPORTANCE: RO 2.7

10CFR55 CONTENT: 55.41(b) RO 7

OBJECTIVE: DC-09
Explain the normal operation of the DC Electrical System control systems. Include function, instrumentation, interlocks, annunciators, and setpoints.

REFERENCES: SD-038

SOURCE: New Significantly Modified Modified/Direct **X**

Bank Number DC-09 001

JUSTIFICATION:

a. Plausible since Battery Chargers "A", "B", and "C" use a separate ground meter. Battery charger "A-1" uses the output meter.

b. **CORRECT** On Battery Charger "A-1", the charger output voltmeter also serves as the DC ground meter. During testing for grounds on Battery Charger "A-1", the voltmeter will drop to about 1/2 of bus voltage (approximately 65 volts) with no ground present.

c. Plausible since this method is used for determining grounds on 480 VAC buses. Battery charger uses the output meter.

d. Plausible since this method is used for determining grounds on 4160 VAC buses. Battery charger uses the output meter.

DIFFICULTY:
Comprehensive/Analysis Memory **X** Rating 2

Knowledge of normal indications on electrical panel while monitoring for grounds.

REFERENCES SUPPLIED: NONE

Ground detection for Station Batteries "A", "B", and "C" are sensed by a relay and voltmeter on each battery charger, with the relay providing the ground alarm. On Battery Chargers "A" and "B", the DC ground meter reads from +75 volts to -75 volts, left to right. Three test buttons, + GND, - GND, and GND RELAY, are provided. When the + GND or - GND buttons are pressed, a ground is placed on the positive (or negative) battery lead. The pressed test button opens a contact in the ground detection circuit which actually measures the other phase (lead) voltage to ground. Without a ground present, the meter should deflect to 65 volts to the positive or negative side. With a ground present, the meter will be offset by the amount of ground. These pushbuttons are provided to test the ground detection system operability. When the GND RELAY test button is pressed, the relay is actuated and the ground alarm will annunciate. The actual ground is read with no test buttons depressed. The ground meter reads zero with no grounds; if the reading exceeds 10 volts either positive or negative the ground should be located and fixed as soon as possible.

On Battery Chargers "A-1" and "B-1", the charger output voltmeter also serves as the DC ground meter. Ground indication is read by turning the selector switch to POS GND and then to NEG GND.

Battery Charger "C" has a separate ground voltmeter to indicate DC ground in conjuction with the Ground VM switch. When not checking for ground, this voltmeter indicates the charger output. Ground indication is read by turning the selector switch to POS GROUND and then to NEG GROUND.

During testing for grounds on Battery Chargers "A-1", "B-1", or "C", the voltmeter will drop to about 1/2 of buss voltage (approximately 65 volts with no ground present). A significantly lower reading on either direction would indicate a ground. If the reading drops to less than 50 volts, the ground should be located and fixed as soon as possible. If a trouble alarm is being received on Battery Chargers "A-1", "B-1", or "C", I&C personnel can verify the ground is on the positive or negative buss by checking an LED indicator located inside the charger cabinet.

Battery chargers "A-1" and "B-1" do not have a remote ground alarm test relay. Battery charger "C" has a test selector switch mounted below the ground indicator selector switch with POS GROUND and NEG GROUND positions to test the ground alarm.

4.1.1 DC Busses

Each battery bus has indications for the bus voltage and also the amperes on the bus. The ammeters monitor current flow into or out of the battery attached to that MCC.

INFORMATION USE ONLY

Question: 19

Given the following conditions:

- The plant is operating at 85% power 30 days following completion of a Refueling Outage.
- AFD is −2 with a target of −1.
- Rod Control is in AUTO when rods begin stepping out for **NO** apparent reason.
- The operator places Rod Control in MAN and rod motion stops.
- Rods step out 4 steps before Rod Control is placed in MAN.
- The operator manually inserts the rods 4 steps.

Which ONE (1) of the following describes the reason for manually inserting rods 4 steps?

a. Ensure ΔT is maintained below the OTΔT trip setpoint

b. Ensure power is maintained below the High Flux trip setpoint

c. Restore Tave to program

d. Restore AFD within the target band

Answer:

c. Restore Tave to program

QUESTION NUMBER: 19
TIER/GROUP: 1/2

K/A: 001AK3.01
Knowledge of the reasons for the following responses as they apply to the Continuous Rod Withdrawal: Manually driving rods into position that existed before start of casualty

K/A IMPORTANCE: RO 3.2

10CFR55 CONTENT: 55.41(b) RO 6

OBJECTIVE: AOP-001-03
Demonstrate an understanding of selected steps, cautions, and notes in AOP-001 by explaining the basis of each.

REFERENCES: AOP-001

SOURCE: New **X** Significantly Modified Modified/Direct

Bank Number NEW

JUSTIFICATION:

a. Plausible since rod withdrawal causes power to rise initially. Fuel temperature rising will cause power to turn and restore to approximately its initial value.

b. Plausible since rod withdrawal causes power to rise initially. Fuel temperature rising will cause power to turn and restore to approximately its initial value.

c. **CORRECT** With rods having stepped outward, Tave will rise. Inserting the rods the same number of steps as withdrawn will restore Tave.

d. Plausible since rod withdrawal causes AFD to go positive. A withdrawal of 4 steps will not result in AFD going positive outside the target band.

DIFFICULTY:
Comprehensive/Analysis **X** Memory Rating 3

Analysis of plant response to malfunction and determination of appropriate actions.

REFERENCES SUPPLIED: NONE

STEP	INSTRUCTIONS	RESPONSE NOT OBTAINED
	NOTE Steps 1 through 4 are immediate actions.	
1.	Check Unwarranted Rod Motion - IN PROGRESS	Go To Step 6.
2.	Check Reactor Power - GREATER THAN 15%	Trip the Reactor and Go To Path 1.
3.	Attempt To Stop Rod Motion As Follows:	
	a. Check ROD BANK SELECTOR Switch position - A (AUTO)	a. Place the ROD BANK SELECTOR Switch in A (Auto). Go To Step 4.
	b. Place ROD BANK SELECTOR Switch in M (Manual)	
4.	Check Unwarranted Rod Motion - STOPPED	Trip the Reactor and Go To Path 1.
5.	Go To Section C, Continuous Rod Motion	
6.	Determine If Multiple Rods Have Dropped As Follows:	
	a. Analyze Indications For Multiple Rod Drop • Prompt Drop - PRESENT • More than 1 Rod Bottom Light - ILLUMINATED • More Than 1 IRPI - INDICATES ON BOTTOM	
	b. Check Multiple Dropped Rods - PRESENT	b. Go To Step 9.
7.	Check Reactor Status - MODE 1 **OR** 2	Go To Section A, Dropped Rod

STEP	INSTRUCTIONS	RESPONSE NOT OBTAINED

SECTION C

CONTINUOUS ROD MOTION

(Page 2 of 3)

* 6.	Check Reactor Power - LESS THAN OR EQUAL TO 100%	Perform the following: a. Verify Automatic Rod Control drives rods in to maintain reactor power less than or equal to 100%. b. IF rods do NOT drive in immediately, THEN borate using OP-301, Chemical and Volume Control System (CVCS). c. IF power can NOT be maintained less than or equal to 100%, THEN trip the Reactor and Go To Path-1. d. Go To Step 8.
7.	Check Rod Bank Selector Switch Position - AUTO	Perform the following: a. Maintain Tavg within +0.5 to -2.5°F of Tref using Manual Rod Control. b. IF Manual Rod Control will NOT function, THEN adjust Turbine load. c. IF N-44 has failed, THEN remove the channel from service using OWP-011, Nuclear Instrumentation
8.	Contact I&C and Reactor Engineering to troubleshoot and correct the problem.	
9.	Implement the EALs	

Question: 20

A Design Basis LOCA has occurred.

Which ONE (1) of the following describes the **MINIMUM** combination of equipment that will ensure Containment does **NOT** exceed design limits?

	CONTAINMENT SPRAY PUMPS	**CONTAINMENT FAN COOLERS**
a.	Pumps 'A' and 'B'	None
b.	Pump 'A"	Fan Cooler HVH-1
c.	Pumps 'A' and 'B'	Fan Coolers HVH-1 and HVH-2
d.	None	Fan Coolers HVH-1, HVH-2, and HVH-3

Answer:

a.	Pumps 'A' and 'B'	None

QUESTION NUMBER: 20
TIER/GROUP: 2/2

K/A: 002K3.03
Knowledge of the effect that a loss or malfunction of the RCS will have on the Containment

K/A IMPORTANCE: RO 4.2

10CFR55 CONTENT: 55.41(b) RO 8

OBJECTIVE: CSS-12
State the Technical Specification Limitations and EXPLAIN the bases for the CSS.

REFERENCES: SD-024
FSAR 6.2.2.1

SOURCE: New Significantly Modified **X** Modified/Direct

Bank Number CV-09 005

JUSTIFICATION:

a. **CORRECT** Either all 4 containment coolers, both CS pumps, or 2/4 coolers and 1/2 pumps are required.

b. Plausible since a 1 of each type of equipment is functioning. Either all 4 containment coolers, both CS pumps, or 2/4 coolers and 1/2 pumps are required.

c. Plausible since this would meet the minimum requirement. This exceeds the minimum requirement as either one fan or both coolers can be turned off and still meet minimum requirements.

d. Plausible since all but one fan cooler is operating, which candidate may determine constitutes a single failure. An additional fan cooler or a containment spray pump is also required.

DIFFICULTY:
Comprehensive/Analysis Memory **X** Rating 2

Knowledge of minimum required combination of CS pumps and CV coolers.

REFERENCES SUPPLIED: NONE

PSA RELATED

Any of the following combinations of equipment will provide sufficient heat removal capability to maintain the post-accident CV pressure below the design value:

a. All four containment cooling units
b. Both containment spray pumps
c. Two of the four containment cooling units and one containment spray pump

The spray system was designed to operate over an extended time period to ensure that the heat removal capability required during the post accident period can be attained. The CSS was designed to spray at least 2322 gpm of borated water into the Containment Building whenever the coincidence of two sets of two out of three (Hi-Hi) containment pressure signals occurs or a manual signal is given. Either of the two trains containing a pump and associated valving and spray headers is independently capable of delivering one-half of the flow, or, 1161 gpm.

The Containment Spray System and Containment Cooling System limit the temperature and pressure that could be experienced following a DBA. The analysis and evaluation show that under the worst case scenario, the highest peak containment pressure is 40.5 psig (experienced during a SLB). The design pressure is 42 psig. The analysis shows that the peak containment temperature is approximately 350°F (experienced during an SLB). The design temperature is 263°F. Thermal analyses showed that the time interval during which the containment air temperature exceeded the containment design temperature was short enough that the equipment surface temperatures remained below the design temperature. Therefore, it is concluded that the calculated transient containment air temperature is acceptable for the DBA SLB. Both the pressure and temperature meet the intent of the design basis.

Adequate containment cooling and iodine removal are provided by the Spray System whose components operate as follows:

In the event of a LOCA or MSLB inside containment, the CSS is automatically initiated upon reaching the high-high containment pressure setpoint of 20 psig (NOTE - In the year 2000, it is planned to reduce the setpoint to 10 psig to allow the Service Water temperature to be increased). Upon initiation, the Spray pumps take suction from the RWST. (CSS-Figure-1) All RWST level instruments are connected to a common line from the tank and could be effected by a common failure. (See SOER 97-1, "Potential Loss of High Pressure Injection and Charging Capability from Gas Intrusion"). The Spray pump discharge valves and valves associated with the Spray Additive Tank are opened. If required, the operator can manually actuate the entire system from the Control Room. Water from the pumps is then forced through the spray ring header nozzles into the containment atmosphere.

INFORMATION USE ONLY

Two motor driven, single stage, centrifugal pumps are provided to deliver a mixture of borated water and sodium hydroxide solution to the spray ring for distribution to the Containment Vessel atmosphere. The pumps and associated valves operate automatically from a Spray (P) signal. There is a STOP/START switch on the RTGB with a spring return to center.

The CSS pumps deliver a total minimum flowrate of 2322 gpm or 1161 gpm/train. The original Westinghouse design required 970 gpm. The pumps supplied exceeded this requirement. Various analysis use the value that is conservative for the situation. For example NPSH uses maximum flow; iodine removal uses minimum flow. Westinghouse WCAP 12070 has a section discussing the CS system and flows.

The spray pump seals are cooled by CCW. CCW needs to be in operation during initial recirculation phase (post-LOCA, when the pumps could be exposed to hotter water from the CV). There is an annunciator on the RTGB, "CV SPY PMP COOL WTR LO FLOW", APP-002-E1 set at 30 gpm, to warn the operators of the possibility of overheating the pumps. A precaution in OP-202 states, "Prior to operating a pump, CCW shall be available to the Seal Water Heat Exchanger".

Electrical power supplies are:

"A" Spray Pump - 480V Bus E1
"B" Spray Pump - 480V Bus E2

NOTE: The following starting duty limitations apply to the Containment Spray Pump. (CSS-Figure-4)

1) IF the pump has not been run in the last 45 minutes, THEN 2 consecutive starts are allowed.

2) IF the pump has been started 2 times in the last 45 minutes, AND neither of the last 2 starts was a run of at least 20 minutes, THEN no further starts are allowed for 45 minutes.

   a. Any run in the previous 45 minutes is considered one of the 2 allowed starts.

3) IF the pump was run at least 20 minutes and stopped, THEN 1 start is allowed with no waiting period.

4) Maximum of 6 starts per day if run time is 20 minutes or more between starts.

INFORMATION USE ONLY

6.2.2 Containment Heat Removal Systems

6.2.2.1 Design Basis

Adequate post accident heat removal capability for the containment is provided by two separate, full capacity, ESF systems. These are the Containment Spray System (CSS), described in Section 6.2.2.2.1 and the Containment Air Recirculation Cooling System whose components operate as described in Section 6.2.2.2.2. These systems are of different engineering principles and serve as independent backups for each other.

These two ESF systems were designed to remove sufficient heat from the reactor containment, following the initial LOCA containment pressure transient, to keep the containment pressure from exceeding the design pressure.

Any of the following combinations of equipment will provide sufficient heat removal capability to maintain the post-accident containment pressure below the design value, assuming that the core residual heat is released to the containment as steam.

a) All four containment cooling units

b) Both containment spray pumps, or

c) Two of the four containment cooling units and one containment spray pump.

After the injection operation it is expected that spray flow could be discontinued while maintaining containment pressure reduction with the containment fan cooler units. Details of the normal and emergency power sources for these ESF systems are presented in the discussion of the Electrical System, Section 8.

6.2.2.1.1 Containment Spray System

The primary purpose of the CSS is to spray cool water into the containment atmosphere when appropriate in the event of a LOCA and thereby ensure that containment pressure does not exceed its design value which is 42 psig at 263°F (100 percent RH). This protection is afforded for all pipe break sizes up to and including the hypothetical instantaneous circumferential rupture of a reactor coolant pipe. Pressure and temperature transients for LOCA are presented in Section 6.2.1.1.1.1. Although the water in the core after a LOCA is quickly subcooled by the SIS, the CSS design is based on the conservative assumption that the core residual heat is released to the containment as steam.

The CSS was designed to spray at least 2322 gpm of borated water into the Containment Building whenever the coincidence of two sets of two out of three (Hi-Hi) containment pressure signals occurs or a manual signal is given. Either of two subsystems containing a pump and associated valving and spray headers is independently capable of delivering one-half of this flow, or, 1161 gpm.

CV-09 005

Given the following plant conditions:

- The plant was at 100% power
- A Design Basis LOCA has occurred

Which ONE (1) of the following describes the MINIMUM combination of Containment heat removal equipment that is required to mitigate this event?

A. Two Containment Fan Coolers AND Two Containment Spray Pumps.

B. Two Containment Fan Coolers OR One Containment Spray Pump.

✓C. Two Containment Fan Coolers AND One Containment Spray Pump.

D. Two Containment Fan Coolers OR Two Containment Spray Pumps.

Question: 20

Given the following conditions:

- A Design Basis LOCA has occurred.
- Only a single train of ESF equipment actuates.

What is the **MINIMUM ADDITIONAL** equipment, if any, that are required to ensure Containment does **NOT** exceed design limits?

a. **NO** additional Containment Spray Pumps or Containment Fan Coolers are required

b. **EITHER** one (1) additional Containment Spray Pump **OR** two (2) additional Containment Fan Coolers are required

c. **BOTH** one (1) additional Containment Spray Pump **AND** one (1) additional Containment Fan Cooler are required

d. **BOTH** one (1) additional Containment Spray Pump **AND** two (2) additional Containment Fan Cooler are required

Answer:

a. **NO** additional Containment Spray Pumps or Containment Fan Coolers are required

QUESTION NUMBER: 20
TIER/GROUP: 2/2

K/A: 002K3.03
Knowledge of the effect that a loss or malfunction of the RCS will have on the Containment

K/A IMPORTANCE: RO 4.2

10CFR55 CONTENT: 55.41(b) RO 8

OBJECTIVE: CSS-12
State the Technical Specification Limitations and EXPLAIN the bases for the CSS.

REFERENCES: SD-024
FSAR 6.2.2.1

SOURCE: New Significantly Modified **X** Modified/Direct

Bank Number CV-09 005

JUSTIFICATION:

a. **CORRECT** Either all 4 containment coolers, both CS pumps, or 2/4 coolers and 1/2 pumps are required. A single train actuation will ensure 2/4 coolers and 1/2 pumps.
b. Plausible since a complete ESF train failure has occurred. 2/4 coolers and 1/2 pumps is sufficient to maintain CV below design pressure.
c. Plausible since a complete ESF train failure has occurred. 2/4 coolers and 1/2 pumps is sufficient to maintain CV below design pressure.
d. Plausible since a complete ESF train failure has occurred. 2/4 coolers and 1/2 pumps is sufficient to maintain CV below design pressure.

DIFFICULTY:
Comprehensive/Analysis Memory **X** Rating 2

Knowledge of minimum required combination of CS pumps and CV coolers.

REFERENCES SUPPLIED: NONE

PSA RELATED

Question: 21

Given the following conditions:

- The plant has tripped following a loss of offsite power.
- RCS pressure is 1850 psig and stable.
- S/G pressures are 1030 psig and stable.
- Subcooling indicates 27 °F and stable.
- CETs indicate 599 °F and stable.
- RCS hot leg temperatures indicate 597 °F and stable.
- RCS cold leg temperatures indicate 550 °F and stable.

Which ONE (1) of the following describes which Natural Circulation parameter is **NOT** met and the action to take to establish Natural Circulation?

	NC PARAMETER NOT MET	**ACTION TO ESTABLISH NC**
a.	RCS T-cold	Open S/G PORVs
b.	RCS T-cold	Open Steam Dumps
c.	RCS Subcooling	Open S/G PORVs
d.	RCS Subcooling	Open Steam Dumps

Answer:

c.	RCS Subcooling	Open S/G PORVs

QUESTION NUMBER: 21
TIER/GROUP: 1/1

K/A: WE09EA1.1
Ability to operate and / or monitor the following as they apply to Natural Circulation Operations: Components, and functions of control and safety systems, including instrumentation, signals, interlocks, failure modes, and automatic and manual feature

K/A IMPORTANCE: RO 3.5

10CFR55 CONTENT: 55.41(b) RO 2

OBJECTIVE: EPP-005-08
Given plant conditions, evaluate the appropriate actions to mitigate consequences of steps related to Natural Circulation Cooldown as directed in EPP-5.

REFERENCES: EOP Supplement E
Steam Tables

SOURCE: New Significantly Modified **X** Modified/Direct

Bank Number EPP-005-08 003

JUSTIFICATION:

a. Plausible if candidate determines T-cold is not at saturation for S/G pressure. Subcooling is not adequate so additional steaming is required to cool down the RCS using PORVs.

b. Plausible if candidate determines T-cold is not at saturation for S/G pressure. Subcooling is not adequate so additional steaming is required to cool down the RCS. Due to the loss of offsite power, steam dumps are not available.

c. **CORRECT** Subcooling is not adequate so additional steaming is required to cool down the RCS. Due to the loss of offsite power, steam dumps are not available.

d. Plausible since subcooling is not adequate, so additional steaming is required to cool down the RCS. Due to the loss of offsite power, steam dumps are not available.

DIFFICULTY:
Comprehensive/Analysis **X** Memory Rating 3

Evaluation of the effectiveness of natural circulation conditions.

REFERENCES SUPPLIED: NONE

STEP	INSTRUCTIONS	RESPONSE NOT OBTAINED

CONTINUOUS USE

Supplement E

Natural Circulation Verification

(Page 1 of 1)

1.	Check Natural Circulation Status As Follows: • Steam pressure - STABLE OR DECREASING AND • RCS subcooling - GREATER THAN 35°F [55°F] AND • Core exit T/Cs - STABLE OR DECREASING AND • RCS hot leg temperatures - STABLE OR DECREASING AND • RCS cold leg temperatures - TRENDING TO SATURATION TEMPERATURE FOR STEAM PRESSURE	Increase dumping steam.
2.	Return To Procedure And Step In Effect	

- END -

STEP	INSTRUCTIONS	RESPONSE NOT OBTAINED

CONTINUOUS USE

Supplement E

Natural Circulation Verification

(Page 1 of 1)

1.	Check Natural Circulation Status As Follows: • Steam pressure - STABLE OR DECREASING AND • RCS subcooling - GREATER THAN 35°F [55°F] AND • Core exit T/Cs - STABLE OR DECREASING AND • RCS hot leg temperatures - STABLE OR DECREASING AND • RCS cold leg temperatures - TRENDING TO SATURATION TEMPERATURE FOR STEAM PRESSURE	Increase dumping steam.
2.	Return To Procedure And Step In Effect	

- END -

EPP-005-08 003

Which ONE (1) of the following describes the items checked to verify natural circulation in accordance with EPP-005?

A. Subcooled Monitor T/Cs decreasing, RCS cold leg temperatures decreasing, and RCS subcooling increasing.

B. Subcooled Monitor T/Cs increasing, RCS cold leg temperatures increasing, and RCS subcooling decreasing.

✓C. Subcooled Monitor T/Cs decreasing, RCS hot leg temperatures decreasing, and RCS subcooling increasing.

D. Subcooled Monitor T/Cs increasing, RCS hot leg temperatures increasing, and RCS subcooling decreasing.

Question: 21

Given the following conditions:

- The plant has tripped following a loss of offsite power.
- ~~A Natural Circulation cooldown is in progress~~.
- RCS pressure is 1850 psig and stable.
- S/G pressures are 1030 psig and stable.
- Subcooling indicates 27 °F and stable. — INCONSISTANT W/ ERP
- CETs indicate 599 °F and stable.
- RCS hot leg temperatures indicate 597 °F and stable.
- RCS cold leg temperatures indicate 550 °F and stable. ← SAT @ ~ 620 °F

Which ONE (1) of the following actions should be taken to continue the cooldown?

a. Raise RCS pressure

b. Decrease RCS pressure

c. Increase steaming rate — NO DISCRIMINATORY VALUE

d. ~~Decrease steaming~~ rate — GOOD SD

Answer:

c. Increase steaming rate

QUESTION NUMBER: 21
TIER/GROUP: 1/1

K/A: WE09EA1.1
Ability to operate and / or monitor the following as they apply to Natural Circulation Operations: Components, and functions of control and safety systems, including instrumentation, signals, interlocks, failure modes, and automatic and manual feature

K/A IMPORTANCE: RO 3.5

10CFR55 CONTENT: 55.41(b) RO 2

OBJECTIVE: EPP-005-08
Given plant conditions, evaluate the appropriate actions to mitigate consequences of steps related to Natural Circulation Cooldown as directed in EPP-5.

REFERENCES: EOP Supplement E

SOURCE: New Significantly Modified **X** Modified/Direct

Bank Number EPP-005-08 003

JUSTIFICATION:

a. Plausible since this will affect subcooling by raising it. Inadequate subcooling requires that additional steaming occur.

b. plausible since this will affect subcooling. Inadequate subcooling requires that additional steaming occur.

c. **CORRECT** Subcooling is not adequate so additional steaming is required to cool down the RCS.

d. Plausible since core ΔT is 49 °F which candidate may consider to be high. Inadequate subcooling requires additional steaming.

DIFFICULTY:
Comprehensive/Analysis **X** Memory Rating 3

Evaluation of the effectiveness of natural circulation conditions.

REFERENCES SUPPLIED: NONE

Question: 22

Given the following conditions:

- The unit is operating at 90% power.
- Control Bank "D" rods are at 180 steps.
- Indicated Axial Flux Difference is approaching its lower limit of -4%.

Which ONE (1) of the following operator-induced changes in plant parameters will cause AFD to be restored to the target value?

	BORON CONCENTRATION	**ROD POSITION**	**REACTOR POWER**
a.	Decrease	**NO** Change	Increase
b.	Increase	Withdraw Rods	**NO** Change
c.	**NO** Change	Insert Rods	Decrease
d.	**NO** Change	**NO** Change	Increase

Answer:

b.	Increase	Withdraw Rods	**NO** Change

QUESTION NUMBER: 22
TIER/GROUP: 2/1

K/A: 015A1.05
Ability to predict and/or monitor changes in parameters to prevent exceeding design limits associated with operating the NIS controls including: Imbalance (axial shape)

K/A IMPORTANCE: RO 3.7

10CFR55 CONTENT: 55.41(b) RO 5

OBJECTIVE: FMP-009-07
Determine the actions required by FMP-009 and Tech Specs when Delta Flux is outside of the target band.

REFERENCES: FMP-009

SOURCE: New Significantly Modified Modified/Direct **X**

Bank Number FMP-009-07 001

JUSTIFICATION:

a. Plausible since RCS boron concentration is required to be changed. This action would result in AFD becoming more negative.
b. **CORRECT** Control rods should be withdrawn while borating to cause AFD to go positive.
c. Plausible since rod position is required to be changed. This action would cause AFD to become more negative.
d. Plausible since plant parameters are required to be changed. This action would cause AFD to be more negative.

DIFFICULTY:
Comprehensive/Analysis **X** Memory Rating 3

Analysis of changing RCS parameters on power distribution.

REFERENCES SUPPLIED: NONE

DIVERGENT AXIAL OSCILLATION

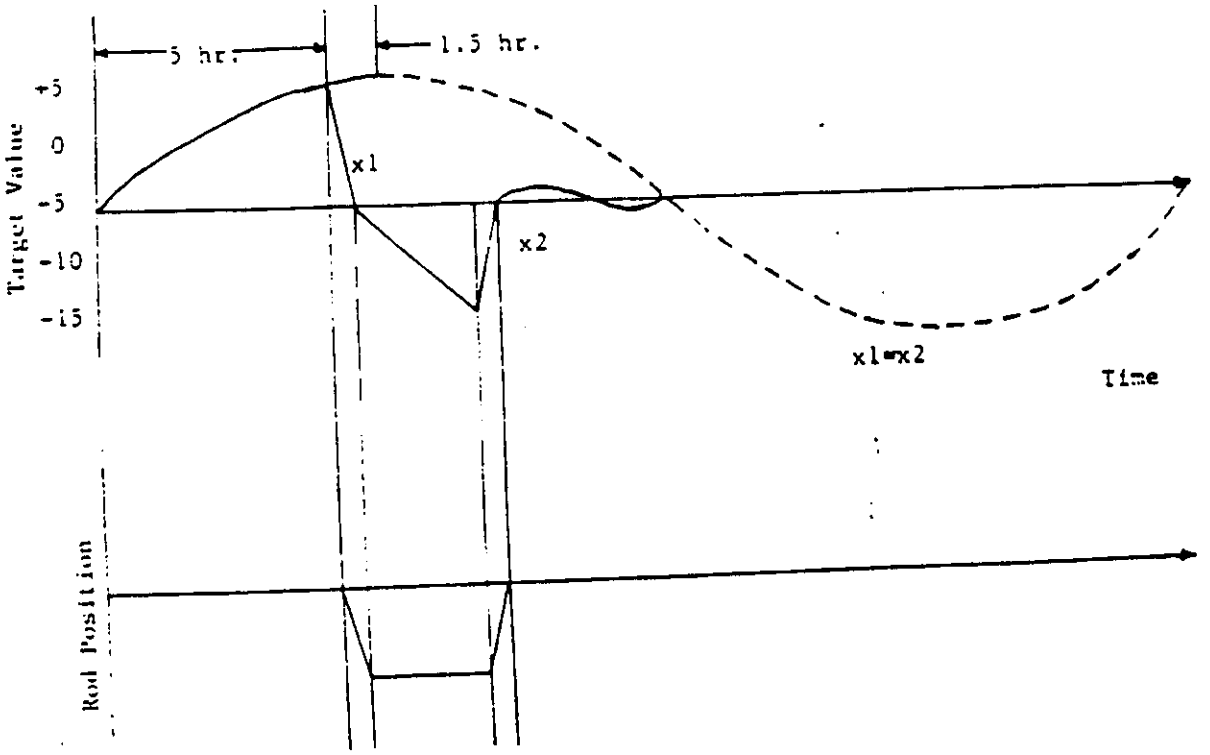

NOTE: To apply numbers to the above control maneuver, assume that the Target Value is -5%, the reactor power is 75% RTP and the APL is >100% RTP. The first peak is at +5 (the dotted line representing a natural divergent oscillation). At the point the control rods are inserted, the AFD is +4%, therefore, X1=9% [+4% -(-5%)]. Stop inserting control rods at -5% and allow the AFD to go to -14% [-5% -(-9%)] with no control rod motion. When the AFD reaches -14%, pull the control rods back to their original position.

8.5.4 (Continued)

1. At 1.5 hours before the most positive peak, determine the AFD from ERFIS or the AFD meters and insert the control rods using dilution until the AFD reaches the Target Value;
2. Determine the change in AFD caused by the control rod insertion (AFD before insertion - Target Value);
3. Maintain a constant control rod position and allow AFD to decrease;
4. When AFD is lower than the Target Value by the amount determined in Step b, withdraw control rods to their original position using boration.

9.0 RECORDS

ATTACHMENT 10.5 must be sent to the vault as a QA record

10.0 ATTACHMENTS

10.1 ERFIS CAOC Software And AFD Related Parameters

10.2 Target and Operating Band Examples

10.3 ERFIS CAOC Warning/Status/Alarm Messages

10.4 Divergent Axial Oscillation

10.5 Manual AFD Monitoring Log

Question: 22

Given the following conditions:

- The unit is operating at 90% power.
- Control Bank "D" rods are at 180 steps.
- Indicated Axial Flux Difference is approaching its lower limit of -4%.

Which ONE (1) of the following actions should be taken to restore AFD to the target value?

a. Dilute and increase reactor power while maintaining program Tave and constant rod position

b. Borate and withdraw control rods while maintaining constant reactor power and Tave

c. Decrease reactor power and insert control rods while maintaining programmed Tave and constant boron concentration

d. Increase reactor power and allow Tave to decrease below Tref while maintaining a constant boron concentration and rod position

Answer:

b. Borate and withdraw control rods while maintaining constant reactor power and Tave

NO DISCRIMINATORY VALUE.

Question: 23

Which ONE (1) of the following would be an **ACCEPTABLE** work schedule for an operator providing shift relief **WITHOUT** requiring any special authorization?

	MAY 6, 2000	**MAY 7, 2000**
a.	0700-2400	OFF
b.	0700-1900	0500-1500
c.	0700-2100	0300-0700
d.	0700-2100	0700-1900

Answer:

b.	0700-1900	0500-1500

QUESTION NUMBER: 23
TIER/GROUP: 3

K/A: 2.1.20
Ability to execute procedure steps.

K/A IMPORTANCE: RO 4.3

10CFR55 CONTENT: 55.41(b) RO 10

OBJECTIVE: TS-005-01
Describe the administrative controls as provided in T.S. Section 5.

REFERENCES: Tech Spec 5.2.2
PLP-015

SOURCE: New Significantly Modified **X** Modified/Direct

Bank Number ADMIN TS 013

JUSTIFICATION:

a. Plausible since operator is off the second day, meeting 24 hour in 48 limit. Exceeds limit of 16 hours in a day.

b. **CORRECT** Does not exceed 16 hours in 24, < 8 hours off between shifts, or 24 hours in 48.

c. Plausible since second day is limited to only 4 hours, meeting 16 hour in 24 and 24 hour in 48 limits. Does not provide for at least 8 hours off.

d. Plausible since 16 hour in 24 and minimum of 8 hour between shift limits are met. Exceeds 24 hour in 48 limit.

DIFFICULTY:
Comprehensive/Analysis **X** Memory Rating 3

Calculation of allowable time limits based upon knowledge of administrative requirements.

REFERENCES SUPPLIED: NONE

ADMIN T. S. 013
Given the following conditions:

· The following hours were worked by an operator involved in a special project:

Day 1	0700 - 1700
Day 2	0700 - 1900
Day 3	0700 - 1900
Day 4	0700 - 1700
Day 5	0700 - 1700
Day 6	0700 - 1700
Day 7	0700 - ????

Which ONE (1) of the following describes the LATEST time that the individual may work on Day 7 without requiring special authorization?

A. 1100

✓B. 1500

C. 1700

D. 1900

5.2 Organization

5.2.2 Unit Staff (continued)

operator shall be assigned to the shift crew while the unit is operating in MODES 1, 2, 3, or 4.

b. At least one licensed Reactor Operator (RO) shall be present in the control room when fuel is in the reactor. In addition, while the unit is in MODE 1, 2, 3, or 4, at least one licensed Senior Reactor Operator (SRO) shall be present in the control room.

c. Shift crew composition may be less than the minimum requirement of 10 CFR 50.54(m)(2)(i) and Specification 5.2.2.a and 5.2.2.g for a period of time not to exceed 2 hours in order to accommodate unexpected absence of on-duty shift crew members provided immediate action is taken to restore the shift crew composition to within the minimum requirements.

d. An individual qualified as a radiation control technician shall be on site when fuel is in the reactor. The position may be vacant for not more than 2 hours, in order to provide for unexpected absence, provided immediate action is taken to fill the required position.

e. Administrative procedures shall be developed and implemented to limit the working hours of unit staff who perform safety related functions (e.g., licensed SROs, licensed ROs, radiation control personnel, auxiliary operators, and key maintenance personnel).

Adequate shift coverage shall be maintained without routine heavy use of overtime. The objective shall be to have operating personnel work a 12 hour day, nominal 40 hour week while the unit is operating. However, in the event that unforeseen problems require substantial amounts of overtime to be used, or during extended periods of shutdown for refueling, major maintenance, or major plant modification, on a temporary basis the following guidelines shall be followed:

1. An individual should not be permitted to work more than 16 hours straight, excluding shift turnover time;

(continued)

5.3 Requirements

Enough plant operating personnel should be employed to maintain adequate shift coverage without routine heavy use of overtime. The objective is to have operating personnel work a normal shift, based on their work schedule, while the plant is operating. However, in the event that unforeseen problems require substantial amounts of overtime to be used, or during extended periods of shutdown for refueling, major maintenance, or major plant modifications, on a temporary basis, the following guidelines shall be followed (Reference Improved Technical Specifications 5.2.2.e):

5.3.1 An individual should not be permitted to work more than 16 hours straight, excluding shift turnover time.

5.3.2 An individual should not be permitted to work more than 16 hours in any 24-hour period, nor more than 24 hours in any 48-hour period, nor more than 72 hours in any seven day period, all excluding shift turnover time.

5.3.3 A break of at least eight hours should be allowed between work periods, including shift turnover time.

5.3.4 Except during extended shutdown periods, the use of overtime should be considered on an individual basis and not for the entire staff on a shift.

These requirements shall apply to the plant staff who perform safety-related work activities (e.g., Senior Reactor Operators, Reactor Operators, Auxiliary Operators, Health Physicists, and key Maintenance personnel).

It should also be noted that Generic Letter No. 82-12 encourages procedures that would allow licensed operators at the controls to be periodically relieved and assigned to other duties away from the control board during their tours of duty.

In accordance with an NRC internal memorandum, dated September 17, 1992, "Health Physics Position: Clarification of Nuclear Power Plant Staff Working Hours," the 7-day week period should <u>not</u> be treated as a fixed, one-week period (e.g., Saturday through Friday) such that the 7-day window is reset at the end of the week. Rather, this 7-day window should be treated as <u>any</u> rolling 7-day period.

Question: 23

Given the following conditions:

The following hours were worked by an operator providing on-shift relief:

Day 1	0700 - 1700
Day 2	0700 - 1900
Day 3	0700 - 1900
Day 4	0700 - 1700
Day 5	0700 - 1700
Day 6	0700 - 1700
Day 7	0700 - ????

Which ONE (1) of the following describes the **LATEST** time that the operator may work on Day 7 **WITHOUT** requiring special authorization?

a. 1100

b. 1500

c. 1700

d. 1900

Answer:

b. 1500

MAKE TASK

QUESTION HAS NO DISCRIMINATORY VALUE

72 HRS IS THE ONLY ONE THAT COULD BE VIOLATED

A BETTER QUESTION WOULD BE TO BUILD IN 2 OR 3 VIOLATIONS THEN ASK HOW MANY REQUIREMENTS WERE VIOLATED.

QUESTION NUMBER: 23
TIER/GROUP: 3

K/A: 2.1.20
Ability to execute procedure steps.

K/A IMPORTANCE: RO 4.3

10CFR55 CONTENT: 55.41(b) RO 10

OBJECTIVE: TS-005-01
Describe the administrative controls as provided in T.S. Section 5.

REFERENCES: Tech Spec 5.2.2
PLP-015

SOURCE: New Significantly Modified Modified/Direct **X**

Bank Number ADMIN TS 013

JUSTIFICATION:

a. Plausible since this would prevent exceeding limit. Does NOT provide LATEST allowable working time.

b. **CORRECT** Working past 1500 would cause operator to exceed 72 hours in 7 day limit.

c. Plausible since other working limits, i.e. 16 hours in 24, 24 hours in 48, would NOT be exceeded. Would exceed 72 hours in 7 day limit.

d. Plausible since other working limits, i.e. 16 hours in 24, 24 hours in **48**, would NOT be exceeded. Would exceed 72 hours in 7 day limit.

DIFFICULTY:
Comprehensive/Analysis **X** Memory Rating 3

Calculation of allowable time limits based upon knowledge of administrative requirements.

REFERENCES SUPPLIED: NONE

Question: 24

Given the following conditions:

- A Monitor Tank has developed a large leak.
- Maintenance personnel are entering the area in an attempt to repair the leak.
- An RNP Maintenance person has accumulated a total dose of 1000 mRem this year.
- The general dose rate in the area is 500 mRem/hour.

What is the **MAXIMUM** time this Maintenance person can stay in the area without exceeding his annual administrative dose limit, assuming **NO** extensions are given?

a. 1 hour

b. 2 hours

c. 6 hours

d. 8 hours

Answer:

b. 2 hours

QUESTION NUMBER: 24
TIER/GROUP: 1/2

K/A: 059AK1.02
Knowledge of the operational implications of the following concepts as they apply to Accidental Liquid Radwaste Release: Biological effects, exposure levels that are acceptable, and units used.

K/A IMPORTANCE: RO 2.6

10CFR55 CONTENT: 55.41(b) RO 12

OBJECTIVE: 10CFR20-03
Identify the Dose Limits for adults including: a. Occupational Dose Limits

REFERENCES: DOS-NGGC-0004

SOURCE: New **X** Significantly Modified Modified/Direct

Bank Number NEW

JUSTIFICATION:

a. Plausible since calculation based on a limit of 1500 mRem per year. Limit is actually 2000 mRem per year.

b. **CORRECT** Administrative limit is 2000 mRem per year. Allowed an additional 1000 mRem in a field of 500 mRem per hour. 2 hours is permitted.

c. Plausible since calculation based on a limit of 4000 mRem per year, which is limit if not all dose is received at HBR. Limit is actually 2000 mRem per year.

d. Plausible since calculation based on a limit of 5000 mRem per year, which is the legal limit. Limit is actually 2000 mRem per year.

DIFFICULTY:
Comprehensive/Analysis **X** Memory Rating 3

Calculation of allowable stay time based on radiation levels and exposure history.

REFERENCES SUPPLIED: NONE

6.0 PRECAUTIONS AND LIMITATIONS

N/A

7.0 SPECIAL TOOLS AND EQUIPMENT

N/A

8.0 ACCEPTANCE CRITERIA

N/A

9.0 INSTRUCTIONS

R2.1 9.1 Adult Occupational Dose Limits

9.1.1 Whole Body - The more limiting of a total effective dose equivalent equal to 5 rem or the sum of the deep dose equivalent and the committed dose equivalent to any individual organ or tissue other than the lens of the eye equal to 50 rem.

9.1.2 Skin - A shallow dose equivalent equal to 50 rem.

9.1.3 Lens of Eye - A lens dose equivalent equal to 15 rem.

9.1.4 Extremities - A shallow dose equivalent equal to 50 rem.

9.2 Occupational Dose to Minors

Minors shall not be employed to work in radiation control areas, although they may enter as visitors.

9.3 CP&L Annual Administrative Dose Limits

9.3.1 0.5 rem CP&L dose if non-CP&L dose for the current year has not been determined (no dose extension permitted).

9.3.2 2 rem CP&L dose and 4 rem total dose if non-CP&L dose for the current year has been determined.

Question: 24

Given the following conditions:

- A Monitor Tank has developed a large leak.
- Maintenance personnel are entering the area in an attempt to repair the leak.
- An RNP Maintenance person has accumulated a total dose of 1000 mRem this year.
- The general dose rate in the area is 500 mRem/hour.

what is the maximum time

~~How long can~~ this Maintenance person stay in the area without exceeding his annual administrative dose limit, assuming **NO** extensions are given?

a. 1 hour can't also

b. 2 hours

c. 6 hours

d. 8 hours

Answer:

b. 2 hours

QUESTION NUMBER: 24
TIER/GROUP: 1/2

K/A: 059AK1.02
Knowledge of the operational implications of the following concepts as they apply to Accidental Liquid Radwaste Release: Biological effects, exposure levels that are acceptable, and units used.

K/A IMPORTANCE: RO 2.6

10CFR55 CONTENT: 55.41(b) RO 12

OBJECTIVE: 10CFR20-03
Identify the Dose Limits for adults including: a. Occupational Dose Limits

REFERENCES: DOS-NGGC-0004

SOURCE: New **X** Significantly Modified Modified/Direct

Bank Number NEW

JUSTIFICATION:

a. Plausible since calculation based on a limit of 1500 mRem per year. Limit is actually 2000 mRem per year.

b. **CORRECT** Administrative limit is 2000 mRem per year. Allowed an additional 1000 mRem in a field of 500 mRem per hour. 2 hours is permitted.

c. Plausible since calculation based on a limit of 4000 mRem per year, which is limit if not all dose is received at HBR. Limit is actually 2000 mRem per year.

d. Plausible since calculation based on a limit of 5000 mRem per year, which is the legal limit. Limit is actually 2000 mRem per year.

DIFFICULTY:
Comprehensive/Analysis **X** Memory Rating 3

Calculation of allowable stay time based on radiation levels and exposure history.

REFERENCES SUPPLIED: NONE

Question: 25

Given the following conditions:

- The plant is in Mode 2 at 4% power.
- "A" and "B" battery chargers are in service.
- "A-1" and "B-1" battery chargers are in standby.
- "B" DC Bus voltage decreases to 120 volts.

Which ONE (1) of the following provides the DC distribution system indication and response, if any, to the above conditions?

a. APP-036-D3, BATT A/B LO VOLT, alarms **AND** Battery charger "B-1" automatically starts

b. APP-036-D2, BATT CHARGER B/B-1 TROUBLE, alarms **AND** Battery charger "B" automatically trips

c. APP-036-D2, BATT CHARGER B/B-1 TROUBLE, alarms **AND** Inverter "B" automatically trips

d. APP-036-D3, BATT A/B LO VOLT, alarms, but **NO** automatic actions occur

Answer:

d. APP-036-D3, BATT A/B LO VOLT, alarms, but **NO** automatic actions occur

QUESTION NUMBER: 25
TIER/GROUP: 2/2

K/A: 063A4.02
Ability to manually operate and/or monitor in the control room: Battery voltage indicator

K/A IMPORTANCE: RO 2.8

10CFR55 CONTENT: 55.41(b) RO 7

OBJECTIVE: DC-15
Given a DC Electrical System alarm and a copy of the appropriate annunciator panel procedure, evaluate the alarm including potential causes, automatic actions, operator actions, and associated setpoints.

REFERENCES: APP-036

SOURCE: New Significantly Modified Modified/Direct **X**

Bank Number DC-09 006

JUSTIFICATION:

a. Plausible since there is an automatic trip feature associated with the battery chargers and this alarm would be received. There is not an automatic start feature.

b. Plausible since there is an automatic trip feature associated with the battery chargers and DC bus voltage and an alarm, although not this one, would be received. Trip occurs on an overvoltage condition (150 VDC), not an undervoltage.

c. Plausible since the inverter is supplied by this DC bus and an alarm, although not this one, would be received. There is not an automatic trip feature.

d. **CORRECT** Common alarm comes in when either "A" or "B" battery voltage drops to 123 VDC.

DIFFICULTY:
Comprehensive/Analysis Memory **X** Rating 3

Knowledge of system response to alarm conditions.

REFERENCES SUPPLIED: NONE

ALARM

BATT A/B LO VOLT

AUTOMATIC ACTIONS

1. None Applicable

CAUSE

1. Sustained loss of Battery Charger
2. Failure of a Battery or cell

OBSERVATIONS

1. ERFIS Points APV3022A, DC MCC-A VOLT and APV3024A, DC MCC-A CURRENT ERFIS Points APV3023A, DC MCC-B VOLT and APV3025A, DC MCC-B CURRENT

NOTE: ITS SR 3.8.6.3 requires verification of battery cell parameters within 24 hours after a battery discharge to less than 110 Volts. This is accomplished by MST-903.

ACTIONS

1. Check Battery voltage immediately.
2. **IF** required, **THEN** reenergize in service battery charger **OR** place standby battery charger in service IAW OP-601, DC Supply System.
3. **WHEN** a Charger has been placed in service, **THEN** direct Maintenance to perform MST-903 for the Battery with low voltage.
4. **IF** plant trip occurs, **THEN** refer to EOP Network.

DEVICE/SETPOINTS

1. Low Voltage Alarm / 123 VDC (Reset at 126.5 VDC)

POSSIBLE PLANT EFFECTS

1. Plant trip
2. Loss of DC

Question: 25

mode 1 or 2?

Given the following conditions:

- The plant is in Mode 2 at 4% power.
- "A" and "B" battery chargers are in service.
- "A-1" and "B-1" battery chargers are in standby.
- "B" DC Bus voltage decreases to 120 volts.

Which ONE (1) of the following provides the DC distribution system response to the above conditions?

indicator

a. Battery charger "B-1" automatically starts

b. Battery charger "B" automatically trips

c. Inverter "B" automatically trips

d. APP-036-D3, BATT A/B LO VOLT, is received

regardless of A, b or c d will always be true

Answer:

d. APP-036-D3, BATT A/B LO VOLT, is received

QUESTION NUMBER: 25
TIER/GROUP: 2/2

K/A: 063A4.02
Ability to manually operate and/or monitor in the control room: Battery voltage indicator

K/A IMPORTANCE: RO 2.8

10CFR55 CONTENT: 55.41(b) RO 7

OBJECTIVE: DC-15
Given a DC Electrical System alarm and a copy of the appropriate annunciator panel procedure, evaluate the alarm including potential causes, automatic actions, operator actions, and associated setpoints.

REFERENCES: APP-036

SOURCE: New Significantly Modified Modified/Direct **X**

Bank Number DC-09 006

JUSTIFICATION:

a. Plausible since there is an automatic trip feature associated with the battery chargers. There is not an automatic start feature.

b. Plausible since there is an automatic trip feature associated with the battery chargers and DC bus voltage. Trip occurs on an overvoltage condition (150 VDC), not an undervoltage.

c. Plausible since the inverter is supplied by this DC bus. There is not an automatic trip feature.

d. **CORRECT** Common alarm comes in when either "A" or "B" battery voltage drops to 123 VDC.

DIFFICULTY:
Comprehensive/Analysis Memory **X** Rating 3

Knowledge of system response to alarm conditions.

REFERENCES SUPPLIED: NONE

Question: 26

Given the following conditions:

- Reactor Power is 60%.
- After being within the target band for the previous 38 days, a power reduction has occurred.
- Axial Flux Difference (AFD) has been outside the target band for the past seventy (70) minutes.

Which ONE (1) of the following identifies the number of penalty points accumulated and the proper response?

a. 35 penalty points have been accumulated. There are **NO** restrictions on power level.

b. 70 penalty points have been accumulated. Power must be maintained below 90%.

c. 35 penalty points have been accumulated. Power must be maintained $\leq$ 60%.

d. 70 penalty points have been accumulated. Power must be reduced below 50%.

Answer:

d. 70 penalty points have been accumulated. Power must be reduced below 50%.

QUESTION NUMBER: 26
TIER/GROUP: 1/2

K/A: 003AK3.05
Knowledge of the reasons for the following responses as they apply to the Dropped Control Rod: Tech-Spec limits for reduction of load to 50% power if flux cannot be brought back within specified target band

K/A IMPORTANCE: RO 3.4

10CFR55 CONTENT: 55.41(b) RO 2

OBJECTIVE: FMP-009-08
Determine the actions required by FMP-009 and Tech Specs when Delta Flux is outside of the operating band.

REFERENCES: Tech Spec 3.2.3

SOURCE: New **X** Significantly Modified Modified/Direct

Bank Number NEW

JUSTIFICATION:

a. Plausible since the number of penalty points would be 35 if power were below 50%. 70 penalty points have been accumulated.

b. Plausible since the number of penalty points is correct. A reduction in power to below 50% is required.

c. Plausible since the number of penalty points would be 35 if power were below 50%. 70 penalty points have been accumulated.

d. **CORRECT** Above 50% power, 1 penalty points is accumulated for each minute outside the target band. Exceeding 60 penalty points requires power reduction to < 50%.

DIFFICULTY:
Comprehensive/Analysis **X** Memory Rating 3

Calculation of AFD penalty points and knowledge of required actions.

REFERENCES SUPPLIED: NONE

3.2 POWER DISTRIBUTION LIMITS

3.2.3 AXIAL FLUX DIFFERENCE (AFD) (PDC-3 Axial Offset Control Methodology)

LCO 3.2.3 The AFD:

a. Shall be maintained within the target band about the target flux difference. The allowable values of the target band are specified in the COLR.

----------NOTE----------
The AFD shall be considered outside the target band when two or more OPERABLE excore channels indicate AFD to be outside the target band.
---

b. May deviate outside the target band with THERMAL POWER < 90% RTP or 0.9 APL, whichever is less, but ≥ 50% RTP, provided AFD is within the acceptable operation limits and cumulative penalty deviation time is ≤ 1 hour during the previous 24 hours. The acceptable operation limits are specified in the COLR.

----------NOTES----------
1. Penalty deviation time shall be accumulated on the basis of a 1 minute penalty deviation for each 1 minute of power operation with AFD outside the target band.

2. The Allowable Power Level (APL) is the limitation placed on THERMAL POWER for the purposes of applying the AFD target flux and operational limit curves. The APL is as follows:

   APL = minimum over Z of $(100\%)(F_Q^{RTP}(Z))(K(Z))/F_Q^{V}(Z)$
---

c. May deviate outside the target band with THERMAL POWER < 50% RTP.

----------NOTE----------
Penalty deviation time shall be accumulated on the basis of a 0.5 minute penalty deviation for each 1 minute of power operation with AFD outside the target band.

APPLICABILITY: MODE 1 with THERMAL POWER > 15% RTP.

----------NOTE----------
A total of 16 hours of operation may be accumulated with AFD outside the target band without penalty deviation time during surveillance of power range channels in accordance with SR 3.3.1.6, provided AFD is maintained within acceptable operation limits.

ACTIONS

CONDITION	REQUIRED ACTION	COMPLETION TIME
A. THERMAL POWER ≥ 90% RTP or 0.9 APL, whichever is less. AND AFD not within the target band.	A.1 Restore AFD to within target band.	15 minutes
B. Required Action and associated Completion Time of Condition A not met.	B.1 Reduce THERMAL POWER to < 90% RTP or 0.9 APL, whichever is less.	15 minutes

(continued)

ACTIONS (continued)

CONDITION	REQUIRED ACTION	COMPLETION TIME
C. ---------NOTE--------- Required Action C.1 and C.2 must be completed whenever Condition C is entered. ---------- THERMAL POWER < 90% RTP or 0.9 APL, whichever is less, and ≥ 50% RTP with cumulative penalty deviation time > 1 hour during the previous 24 hours. OR THERMAL POWER < 90% RTP or 0.9 APL, whichever is less, and ≥ 50% RTP with AFD not within the acceptable operation limits.	C.1 Reduce THERMAL POWER to < 50% RTP. AND C.2 Restore cumulative penalty deviation time to less than 1 hour.	30 minutes Prior to increasing THERMAL POWER to ≥ 50% RTP
D. ---------NOTE--------- Required Action D.1 must be completed whenever Condition D is entered. ---------- Required Action and associated Completion Time for Condition C not met.	D.1 Reduce THERMAL POWER to < 15% RTP.	9 hours

Question: 27

With the exception of SI-866A and B, Hot Leg Injection Valves, all motor operated valves in the Safety Injection system numbered with a suffix of "A" or "C" are powered from ...

a. MCC-5.

b. MCC-6.

c. MCC-9.

d. MCC-10.

Answer:

a. MCC-5.

QUESTION NUMBER: 27
TIER/GROUP: 2/2

K/A: 006K2.02
Knowledge of bus power supplies to the valve operators for accumulators

K/A IMPORTANCE: RO 2.5

10CFR55 CONTENT: 55.41(b) RO 8

OBJECTIVE: SI-06
List power supplies for the major Safety Injection System components as listed in the EDPs.

REFERENCES: OP-603

SOURCE: New Significantly Modified Modified/Direct **X**

Bank Number SI-06 003

JUSTIFICATION:

a. **CORRECT** Except as noted, all Train "A" SI motor-operated valves are powered from MCC-5.
b. Plausible since nearly all Train "B" SI motor-operated valves are powered from MCC-6. Train "A" valves are powered from MCC-5.
c. Plausible since all SI motor-operated valves are powered from an MCC. Train "A" valves are powered from MCC-5.
d. Plausible since all SI motor-operated valves are powered from an MCC. Train "A" valves are powered from MCC-5.

DIFFICULTY:
Comprehensive/Analysis Memory **X** Rating 2

Knowledge of SI system power supplies.

REFERENCES SUPPLIED: NONE

ELECTRICAL DISTRIBUTION SYSTEM STARTUP LINEUP

Align the following MCC Breakers as indicated, except those under clearance. List exceptions in the EXCEPTIONS section provided.

MCC-5

DESCRIPTION	POSITION	INITIALS	VERIFIED BY
LEAKOFF COLLECTION TANK PUMPS "A" & "B"	CLOSED		
V6-12D, NORTH SERVICE WATER HEADER ISOLATION (ALT. POWER)	OPEN		
FP-256, RCP SPRINKLER & CV FIRE HOSE ISOLATION	CLOSED		
FP-248, ELECTRICAL PENETRATION SPRINKLER ISOLATION	CLOSED		
SI-878A, SI PUMPS "A" & "B" DISCHARGE CROSS CONNECT	CLOSED*		
V6-33B, CV RECIRC COOLER HVH-2 SW INLET	CLOSED		
V6-33A, CV RECIRC COOLER HVH-1 SW INLET	CLOSED		
V6-33E, CV RECIRC COOLER HVH-4 SW SELECTIVE INLET	CLOSED		
BORIC ACID TANK "A" HEATERS	CLOSED		
EDG "A" AIR COMPRESSOR	CLOSED		
RELAY ROOM AIR CONDITIONING UNIT, HVA-2	CLOSED		
RHR-744A, RHR LOOP TO RCS COLD LEG	CLOSED		
CC-749A, RHR HEAT EXCHANGER "A" COOLING WATER OUTLET	CLOSED		
FEED TO INSTRUMENT BUS 1	CLOSED		
EDG "A" AUX. PANEL	CLOSED		
EDG "A" ROOM EXHAUST FAN, HVE-18	CLOSED		
AUX. BUILDING EXHAUST FAN, HVE-2A	CLOSED		

*Breaker position varies with Plant conditions IAW general procedures.

ELECTRICAL DISTRIBUTION SYSTEM STARTUP LINEUP

MCC-5 (Continued)

DESCRIPTION		POSITION	INITIALS	VERIFIED BY
BATTERY CHARGER "A-1"		CLOSED		
EDG "A" ROOM SUPPLY FAN, HVS-6		CLOSED		
BORIC ACID TRANSFER PUMP "A"		CLOSED		
CONTROL ROD DRIVE FAN, HVH-5A		CLOSED		
RHR PUMP "B" PIT RECIRC. FAN, HVH-8A	BREAKER	CLOSED		
	SELECTOR SWITCH	AUTO		N/A
AUX. BUILDING EXHAUST CHARCOAL FILTER BOOSTER FAN, HVE-5A		CLOSED		
RHR-752A, RHR PUMP "A" SUCTION		OPEN		
V2-6A, FW HEADER DISCHARGE		CLOSED		
AUX. BUILDING SUPPLY FAN, HVS-1		CLOSED		
INSTRUMENT AIR COMPRESSOR "A"		CLOSED		
CV IODINE REMOVAL UNIT, HVE-3		CLOSED		
SI PUMP ROOM RECIRC FAN, HVH-6A	BREAKER	CLOSED		
	SELECTOR SWITCH	AUTO		N/A
CVC-350, BORIC ACID TO CHARGING PUMP SUCTION HEADER		CLOSED		
CVC-381, RCP SEAL WATER RETURN ISOLATION		CLOSED		
CC-735, RCP "A," "B," "C" THERMAL BARRIER COOLING WATER ISOL. VALVE		CLOSED		
SI-865C, ACCUMULATOR "C" DISCHARGE		OPEN *		

* Breaker position varies with Plant conditions IAW General Procedures.

ELECTRICAL DISTRIBUTION SYSTEM STARTUP LINEUP

MCC-5 (Continued)

DESCRIPTION	POSITION	INITIALS	VERIFIED BY
SI-880C, CONTAINMENT SPRAY PUMP "B" DISCHARGE	CLOSED		
SI-867A, BIT INLET	CLOSED		
BORIC ACID HEAT TRACE SECONDARY PANEL	CLOSED		
FEED TO LP-29 (ALT POWER)	CLOSED		
V6-12B, SW PUMP DISCHARGE HEADER CROSS CONNECT	CLOSED		
SI-864A, RWST DISCHARGE	CLOSED		
SI-870A, BIT OUTLET COLD LEG INJECTION	CLOSED		
BATTERY CHARGER "A"	CLOSED		
V6-12A, SOUTH SW HEADER ISOLATION	CLOSED		
SI-866B, SI PUMP DISCHARGE HOT LEG INJECTION	CLOSED		
SI-860A, CV SUMP RECIRC SUCTION	CLOSED		
RHR-750, RHR PUMP SUCTION FROM RCS	CLOSED		
CC-716A, RCP COOLING WATER INLET ISOLATION	CLOSED		
SI-869, SI PUMP DISCHARGE HOT LEG INJECTION	CLOSED		
SI-845A, SPRAY ADDITIVE TANK DISCHARGE	CLOSED		
SI-844A, CV SPRAY PUMP "A" SUCTION	CLOSED		
SI-863A, RHR PUMP "A" DISCHARGE SI PUMP SUCTION	CLOSED		
SI-862A, RHR LOOP RWST SUCTION	CLOSED		
SI-845C, SPRAY ADDITIVE TANK OUTLET THROTTLE	CLOSED		
RHR-759A, RHR HEAT EXCHANGER "A" OUTLET	CLOSED		

ELECTRICAL DISTRIBUTION SYSTEM STARTUP LINEUP

MCC-5 (Continued)

DESCRIPTION		POSITION	INITIALS	VERIFIED BY
SI-865A, ACCUMULATOR "A" DISCHARGE		OPEN *		
SI-880A, CV SPRAY PUMP "A" DISCHARGE		CLOSED		
SI-861A, CV SUMP SUCTION		CLOSED		
EDG FUEL OIL TRANSFER PUMP "A"		CLOSED		
V1-8A, SDAFW PUMP STEAM ISOLATION		CLOSED		
V6-34B, CV RECIRC COOLER HVH-2 SW OUTLET		CLOSED		
V6-34A, CV RECIRC COOLER HVH-1 SW OUTLET		CLOSED		
MDAFW PUMP ROOM RECIRC FAN, HVH-7B	BREAKER	CLOSED		
	SELECTOR SWITCH	AUTO		N/A
FUEL HANDLING BUILDING UPPER LEVEL EXHAUST GAS, R-21		CLOSED		
FEED TO MCC-10		CLOSED		

*Breaker position varies with Plant conditions IAW general procedures.

Exceptions

Question: 28

FRP-S.2, "Response to Loss of Core Shutdown," restores the core to a shutdown condition by adding negative reactivity by ...

a. borating the RCS.

b. tripping S/D Bank "A" rods.

c. depressurizing to inject the SI accumulators.

d. allowing the RCS to heatup.

Answer:

a. borating the RCS.

QUESTION NUMBER: 28
TIER/GROUP: 1/1

K/A: 024AK1.02
Knowledge of the operational implications of the following concepts as they apply to Emergency Boration: Relationship between boron addition and reactor power

K/A IMPORTANCE: RO 3.6

10CFR55 CONTENT: 55.41(b) RO 10

OBJECTIVE: FRP-S.2-03
Given plant conditions evaluate the appropriate actions to mitigate consequences of steps related to loss of core shutdown as directed in FRP-S.2.

REFERENCES: FRP-S.2

SOURCE: New Significantly Modified **X** Modified/Direct

Bank Number FRP-S.2-01 001

JUSTIFICATION:

a. **CORRECT** Only method described by FRP-S.2 to add negative reactivity.
b. Plausible since this would add negative reactivity. EOP network is entered after reactor is tripped, so all rods would already be inserted.
c. Plausible since other FRPs provide for RCS depressurization to inject the accumulators. FRP-S.2 only uses boration since it is in response to a yellow path condition.
d. Plausible since FRP-S.1 directs allowing the RCS to heat up if boration is not available. FRP-S.2 only uses boration since it is in response to a yellow path condition.

DIFFICULTY:
Comprehensive/Analysis Memory **X** Rating 2

Knowledge of major action in FRP.

REFERENCES SUPPLIED: NONE

PSA RELATED

STEP	INSTRUCTIONS	RESPONSE NOT OBTAINED
1.	Check Intermediate Range Flux - GREATER THAN 10^{-10} AMPS	Go To Step 4.
2.	Check Intermediate Range Flux - INCREASING <u>OR</u> STABLE	<u>WHEN</u> Flux Decreases To Less Than 10^{-10} amps, <u>THEN</u> Go To Step 4.
3.	Check Intermediate Range Detectors - UNDERCOMPENSATED	Perform the following: a. Borate RCS using OP-301, Chemical and Volume Control System, until Intermediate Range Flux is less than 10^{-10} amps. b. Go To Step 2.
4.	Check Source Range Detectors - ENERGIZED	Energize Source Range Detectors by depressing both PERMISSIVE P-6 DEFEAT Pushbuttons.
5.	Transfer One Pen On NR 45 To Desired Source Range Channel	
6.	Check Source Range Startup Rate Indication - ZERO <u>OR</u> NEGATIVE	Borate RCS until Source Range Startup Rate is negative or zero using OP-301, Chemical and Volumne Control System.
7.	Borate The RCS To Obtain Cold Shutdown Boron Concentration Using OP-301, Chemical And Volume Control System	
8.	Reset SPDS <u>AND</u> Return To Procedure And Step In Effect	

- END -

FRP-S.2-01 001
Which ONE (1) of the following is the purpose of FRP-S.2, "Response To Loss Of Core Shutdown"?

A. To restore core reactivity to the Hot, Xenon-Free shutdown condition.

✓ B. To restore the core to an adequate shutdown condition.

C. To add negative reactivity to the core by tripping the turbine and emergency borating.

D. To add negative reactivity to the core which is observed to be at power when expected to be shutdown.

b

Question: 29

Given the following conditions:

- A small break LOCA has occurred.
- All RCPs are stopped.
- RVLIS full range is indicating 35%.
- Subcooling is 0 °F.

The **MINIMUM** CET temperature at which an Inadequate Core Cooling condition would be determined to exist is ...

a. 600 °F.

b. 650 °F.

c. 700 °F.

d. 1200 °F.

Answer:

c. 700 °F.

QUESTION NUMBER: 29
TIER/GROUP: 2/1

K/A: 017K1.02
Knowledge of the physical connections and/or cause-effect relationships between the ITM system and the following systems: RCS

K/A IMPORTANCE: RO 3.3

10CFR55 CONTENT: 55.41(b) RO 10

OBJECTIVE: ICCM-05
Describe the performance and design attributes of the major ICCM components.

REFERENCES: SD-051
CSF-2

SOURCE: New Significantly Modified **X** Modified/Direct

Bank Number ICCM-09 001

JUSTIFICATION:

a. Plausible since value is within reasonable range of actual CET temperature required. CET temperature indicating inadequate core cooling under these conditions is 700 °F.

b. Plausible since value is within reasonable range of actual CET temperature required. CET temperature indicating inadequate core cooling under these conditions is 700 °F.

c. **CORRECT** With the given conditions regarding RCPs, RCS inventory, and subcooling, a CET temperature of 700 °F would require entry into FRP-C.1 for Inadequate Core Cooling.

d. Plausible since value would also require entry into FRP-C.1 regardless of RVLIS indication. CET temperature indicating inadequate core cooling under these conditions is 700 °F.

DIFFICULTY:
Comprehensive/Analysis Memory **X** Rating 3

Knowledge of Inadequate Core Cooling entry conditions.

REFERENCES SUPPLIED: NONE

Question: 29

Given the following conditions:

- A small break LOCA has occurred.
- All RCPs are stopped.
- RVLIS full range is indicating 35%.
- Subcooling is 0 °F.

The **MINIMUM** CET temperature at which an Inadequate Core Cooling condition would be determined to exist is ...

a. 600 °F.

b. 700 °F.

c. 1100 °F.

d. 2300 °F.

not plausible 705°F is critical °T

Answer:

b. 700 °F.

QUESTION NUMBER: 29
TIER/GROUP: 2/1

K/A: 017K1.02
Knowledge of the physical connections and/or cause-effect relationships between the ITM system and the following systems: RCS

K/A IMPORTANCE: RO 3.3

10CFR55 CONTENT: 55.41(b) RO 10

OBJECTIVE: ICCM-05
Describe the performance and design attributes of the major ICCM components.

REFERENCES: SD-051
CSF-2

SOURCE: New Significantly Modified **X** Modified/Direct

Bank Number ICCM-09 001

JUSTIFICATION:

a. Plausible since value is within reasonable range of actual CET temperature required. CET temperature indicating inadequate core cooling under these conditions is 700 °F.

b. **CORRECT** With the given conditions regarding RCPs, RCS inventory, and subcooling, a CET temperature of 700 °F would require entry into FRP-C.1 for Inadequate Core Cooling.

c. Plausible since value is within reasonable range of actual CET temperature required. CET temperature indicating inadequate core cooling under these conditions is 700 °F.

d. Plausible since value is maximum CET temperature that is considered to be valid. CET temperature indicating inadequate core cooling under these conditions is 700 °F.

DIFFICULTY:
Comprehensive/Analysis Memory **X** Rating 3

Knowledge of Inadequate Core Cooling entry conditions.

REFERENCES SUPPLIED: NONE

provide an accurate indication of the level in the vessel due to rapid pressure fluctuations, flow coastdown and oscillations. The period of inaccurate indication would be approximately 2-10 minutes for a one to four inch diameter break. The RVLIS will still provide accurate indication before an Inadequate Core Cooling condition would exist. An Inadequate Core Cooling condition will occur in approximately 20 minutes for a 4 inch diameter break to 3 hours for a 1 inch diameter break. These times are based on tests performed at the Semiscale Test Facility in Idaho.

Inadequate Core Cooling as defined by our emergency response guidelines as 5 or more CETs $\geq$1200 °F. An alternate definition found in our procedures is 5 or more CETs $\geq$ 700 °F **AND** <25 °F subcooling **AND** RVLIS full range <41%. The 41% level equates to 3.5 feet above the bottom of the active fuel region.

For large breaks, the RVLIS will not provide a useful indication during the blowdown portion of the transient. However, the RVLIS will provide an indication of the level in the vessel during the reflooding of the large LOCA transient.

6.2.3 RCS Draindown

The reactor vessel level is monitored using standpipe level indications. RVLIS may be used as a tracking tool, not to determine actual vessel level. This is a caution in GP-8, DRAINING THE RCS based on level errors encountered during 1993 refueling. The cause was non-condensable gases collecting in the instrument line from upper head to sensor bellows. (ACR 93-352)

6.2.4 RVLIS Line Break

Any break or leak in an instrument line or capillary line will result in the associated hydraulic isolator or sensor bellows going full travel. This will cause an alarm on APP-036, A1 or A2 and an ERROR display on the plasma screen.

6.3 Emergency Operation

None

7.0 TECHNICAL SPECIFICATIONS

7.1 Technical Requirements Manual, Section 3.10, Instrumentation To Follow The Course Of An Accident

INFORMATION USE ONLY

ICCM-09 001

Which ONE (1) of the following is the highest temperature that you would expect the Incore Thermocouples used in the ICCM system to be valid?

A. 700°F

B. 1100°F

✓C. 2300°F

D. 3200°F

Question: 30

Which ONE (1) of the following states a function of HVE-3 and HVE-4, CV IODINE RMVL FANS?

a. Provides cooling to the reactor vessel insulation surface and for the primary concrete shielding

b. Provides for the prevention of stratification of hot air in the containment dome

c. Provides purging of the containment vessel

d. Provides pressure and vacuum relief for the containment vessel

Answer:

b. Provides for the prevention of stratification of hot air in the containment dome

QUESTION NUMBER: 30
TIER/GROUP: 3

K/A: 2.1.27
Knowledge of system purpose and or function.

K/A IMPORTANCE: RO 2.8

10CFR55 CONTENT: 55.41(b) RO 9

OBJECTIVE: CVHVAC-01
Describe the purposes of the CV HVAC, PACV and Hydrogen Recombiner Systems.

REFERENCES: SD-035

SOURCE: New Significantly Modified Modified/Direct **X**

Bank Number CVHVAC-01 003

JUSTIFICATION:

a. Plausible since this is a function of a containment ventilation system. Provided by the Reactor Concrete Shield Cooling system.

b. **CORRECT** Along with removing radioactive iodine and other particulate activities, it prevents stratification of hot air, hydrogen, and other gases in the containment dome.

c. Plausible since this is a function of a containment ventilation system. Provided by the Containment Air Purge system.

d. Plausible since this is a function of a containment ventilation system. Provided by the Containment Vacuum Relief and Pressure Relief system.

DIFFICULTY:
Comprehensive/Analysis Memory **X** Rating 2

Knowledge of system function.

REFERENCES SUPPLIED: NONE

3.2 Containment Ventilation and Cooling Systems

Cooling and ventilation are provided to the containment by the following systems:

1. Outdoor Air Makeup - provides filtered and heated air for containment vacuum reliefs, purging, and refueling water surface purging operations.
2. Containment Purge (HVE-1A and HVE-1B) - replaces the containment air with clean, fresh air.
3. Refueling Water Surface Purge - removes potentially contaminated air from the refueling water surface during refueling operations.
4. Containment Vacuum Relief and Pressure Relief - provide manual control of containment pressure with respect to atmospheric pressure.
5. Control Rod Drive Mechanism Cooling (HVH-5A and HVH-5B) - removes heat from the CRDM via the cooling shroud.
6. Reactor Support Cooling (HVE-6A and HVE-6B) - provides air flow to three reactor vessel supports in contact with concrete surfaces.
7. Reactor Concrete Shield Cooling (HVH-9A and HVH-9B) - removes heat from the primary shield concrete wall and from the reactor vessel insulation surface.
8. Containment Air Recirculation Cooling (HVH-1, HVH-2, HVH-3, and HVH-4) - removes heat from containment atmosphere.
9. Containment Air Iodine Removal Exhaust (HVE-3 and HVE-4) - removes radioactive iodine and other particulate activities from the containment atmosphere and prevents stratification of hot air, various isotopes of hydrogen, and other gases with low molecular weights in the containment dome.
10. Post-Accident Containment Venting, Makeup, and Exhaust - provides controlled venting of the containment atmosphere to prevent the accumulation of hydrogen gas from ever reaching a potentially hazardous concentration in post-accident conditions.

3.3 Containment Hydrogen Monitors

The Containment Hydrogen Monitoring System has a range of 0 to 10% Hydrogen with an accuracy of ±0.4% Hydrogen. The input power requirements are 60 watts, 115 VAC at 60 Hz.

3.3.1 Hydrogen Sensor

The H_2 sensor/calibration assemblies consist of a sensor, a calibration cap, an actuating piston, and a mounting assembly. Mounting holes for the assembly are located on the side of the base plate.

Two sensors are read by, and have indication on, the Core Cooling and Containment

INFORMATION USE ONLY

Question: 31

Given the following conditions:

- The plant is in MODE 1.
- CV Temperature is 111 °F.
- CV Sump level is 4.5 inches.
- CV Pressure is 0.4 psig.
- R-7, Incore Room Monitor, has a valid high alarm.

Which ONE (1) of the following is occurring?

a. Steam Generator tube leak

b. CV Pressure Relief has been commenced

c. Incore Flux Mapping has been commenced

d. RCS Drain Valve packing leak

Answer:

c. Incore Flux Mapping has been commenced

QUESTION NUMBER: 31
TIER/GROUP: 1/2

K/A: WE16EK2.1
Knowledge of the interrelations between High Containment Radiation and the following: Components, and functions of control and safety systems, including instrumentation, signals, interlocks, failure modes, and automatic and manual features.

K/A IMPORTANCE: RO 3.0

10CFR55 CONTENT: 55.41(b) RO 11

OBJECTIVE: AOP-005-08
Given plant conditions, evaluate the appropriate actions to mitigate consequences of a high radiation alarm on any plant process, area, or accident radiation monitors as directed by steps in AOP-005.

REFERENCES: AOP-005

SOURCE: New **X** Significantly Modified Modified/Direct

Bank Number NEW

JUSTIFICATION:

a. Plausible if candidate does not recognize that only abnormal condition given is R-7 being in alarm. Would not result in any abnormal containment conditions.

b. Plausible if candidate does not recognize that only abnormal condition given is R-7 being in alarm. Would affect containment pressure if in service.

c. **CORRECT** R-7 in alarm is indication of radiation in incore area where flux thimbles are withdrawn to during mapping. All other containment conditions are normal.

d. Plausible if candidate does not recognize that only abnormal condition given is R-7 being in alarm. Would not affect radiation levels to extent given.

DIFFICULTY:
Comprehensive/Analysis **X** Memory Rating 3

Comparison of normal containment conditions with given conditions to diagnose activity.

REFERENCES SUPPLIED: NONE

STEP	INSTRUCTIONS	RESPONSE NOT OBTAINED

ATTACHMENT 7

AREA MONITOR R-7 - INCORE INSTRUMENT ROOM

(Page 1 of 2)

1.	Check Flux Map Operations - IN PROGRESS	Go To Step 3.
2.	Go To The Main Body, Step 1, Of This Procedure	
3.	Check Personnel - IN CV	Go To Step 9.
4.	Place VLC Switch To EMERG Position	
5.	Depress And Hold CV EVACUATION HORN Pushbutton For 15 SECONDS	
6.	Announce The Following Over Plant PA System: "ATTENTION ALL PERSONNEL. ATTENTION ALL PERSONNEL. A HIGH RADIATION ALARM HAS BEEN RECEIVED ON CV INCORE INSTRUMENT ROOM AREA MONITOR R-7. ALL NON-ESSENTIAL PERSONNEL EVACUATE CV UNTIL FURTHER NOTICE"	
7.	Repeat CV Evacuation Announcement Over PA System	
8.	Place VLC Switch To NORM Position	
9.	Check R-11/R-12 Selector Switch - SELECTED TO CV	Go To Step 12.
10.	Check R-11 OR R-12 - INCREASING OR IN ALARM	Go To Step 12.
11.	Go To Attachment 12	

STEP	INSTRUCTIONS	RESPONSE NOT OBTAINED

1. Use Non-Performed Attachment(s) Listed Below For Radiation Monitor(s) In Alarm:

RADIATION CHANNEL	AREA MONITOR	ATTACHMENT NUMBER	PAGE
R-1	CONTROL ROOM	1	7
R-2	CV AREA	2	8
R-3	PASS PANEL AREA	3	10
R-4	CHARGING PUMP ROOM	4	12
R-5	SPENT FUEL PIT AREA	5	14
R-6	SAMPLING ROOM	6	17
R-7	INCORE INSTRUMENT ROOM	7	19
R-8	DRUMMING STATION	8	21
R-9	LETDOWN LINE AREA	9	22
R-32A R-32B	CV HIGH RANGE	10	24
R-33	MONITOR BLDG AREA MONITOR	11	26

(CONTINUED NEXT PAGE)

STEP	INSTRUCTIONS	RESPONSE NOT OBTAINED

1. (CONTINUED)

RADIATION CHANNEL	PROCESS MONITOR	ATTACHMENT NUMBER	PAGE
R-11 R-12	PROCESS MONITOR R-11/R-12 CV AIR AND PLANT VENT	12	27
RI-14A RI-14B RI-14C RI-14D RI-14E	PLANT EFFLUENT PARTIC PLANT EFFLUENT IODINE PLANT EFFLUENT NG LO PLANT EFFLUENT NG MID PLANT EFFLUENT NG HI	13	30
R-15	CONDENSER AIR EJECTOR GAS	14	32
R-16	HVH COOLING WATER RADIOACTIVE LIQUID	15	33
R-17	COMPONENT COOLING WATER RADIOACTIVE LIQUID	16	36
R-18	LIQUID WASTE DISPOSAL EFFLUENT	17	37
R-19A	STEAM GEN BLOW DN S/G A	18	39
R-19B	STEAM GEN BLOW DN S/G B	19	41
R-19C	STEAM GEN BLOW DN S/G C	20	43
R-20 R-30	FUEL HANDLING BLDG LOWER LEVEL	21	45
R-21	FUEL HANDLING BLDG UPPER LEVEL	22	47

(CONTINUED NEXT PAGE)

STEP	INSTRUCTIONS	RESPONSE NOT OBTAINED

1. (CONTINUED)

RADIATION CHANNEL	PROCESS MONITOR	ATTACHMENT NUMBER	PAGE
R-22A R-22B R-22C	E&RC BUILDING LAB HOODS AND RESPIRATOR ROOM HOOD EXHAUST PARTICULATE E&RC BUILDING LAB HOODS AND RESPIRATOR ROOM HOOD EXHAUST IODINE E&RC BUILDING LAB HOODS AND RESPIRATOR ROOM HOOD EXHAUST NOBLE GAS	23	48
R-23A R-23B R-23C	RADWASTE BUILDING EXHAUST PARTICULATE RADWASTE BUILDING EXHAUST IODINE RADWASTE BUILDING EXHAUST NOBLE GAS	24	49
R-31A	STEAMLINE RADIATION MONITOR	25	50
R-31B	STEAMLINE RADIATION MONITOR	26	51
R-31C	STEAMLINE RADIATION MONITOR	27	52
R-37	CONDENSATE POLISHER WASTE	28	53
R-38A R-38B R-38C	TSC/EOF BUILDING VENTILATION PARTICULATE TSC/EOF BUILDING VENTILATION IODINE TSC/EOF BUILDING VENTILATION NOBLE GAS	29	55

2. Implement The EALs

3. Refer To Technical Specifications To Determine Any Applicable LCOs

4. Return To Procedure And Step In Effect

- END -

Question: 31

Given the following conditions:

- CV Temperature is 111 °F.
- CV Sump level is 4.5 inches.
- CV Pressure is 0.4 psig.
- R-7, Incore Room Monitor, has a valid high alarm.

Which ONE (1) of the following is occurring?

a. CCW leak inside containment

b. CV Pressure Relief has been commenced

c. Incore Flux Mapping has been commenced

d. Steam break inside containment

Answer:

c. Incore Flux Mapping has been commenced

QUESTION NUMBER: 31
TIER/GROUP: 1/2

K/A: WE16EK2.1
Knowledge of the interrelations between High Containment Radiation and the following: Components, and functions of control and safety systems, including instrumentation, signals, interlocks, failure modes, and automatic and manual features.

K/A IMPORTANCE: RO 3.0

10CFR55 CONTENT: 55.41(b) RO 11

OBJECTIVE: AOP-005-08
Given plant conditions, evaluate the appropriate actions to mitigate consequences of a high radiation alarm on any plant process, area, or accident radiation monitors as directed by steps in AOP-005.

REFERENCES: AOP-005

SOURCE: New **X** Significantly Modified Modified/Direct

Bank Number NEW

JUSTIFICATION:

a. Plausible if candidate does not recognize that only abnormal condition given is R-7 being in alarm. Would cause sump level to be abnormally high.

b. Plausible if candidate does not recognize that only abnormal condition given is R-7 being in alarm. Would affect containment pressure if in service.

c. **CORRECT** R-7 in alarm is indication of radiation in incore area where flux thimbles are withdrawn to during mapping. All other containment conditions are normal.

d. Plausible if candidate does not recognize that only abnormal condition given is R-7 being in alarm. Would affect containment pressure and temperature.

DIFFICULTY:
Comprehensive/Analysis **X** Memory Rating 3

Comparison of normal containment conditions with given conditions to diagnose activity.

REFERENCES SUPPLIED: NONE

Question: 32

Which ONE (1) of the following states the **MINIMUM** assured Emergency Diesel Engine starts available from the Emergency Diesel Starting Air System when at normal system air pressure?

a. 2

b. 3

c. 5

d. 8

Answer:

d. 8

QUESTION NUMBER: 32
TIER/GROUP: 2/2

K/A: 064K6.07
Knowledge of the effect of a loss or malfunction of the following will have on the ED/G system:
Air receivers

K/A IMPORTANCE: RO 2.7

10CFR55 CONTENT: 55.41(b) RO 8

OBJECTIVE: EDG-05
Describe the performance and design attributes of the major Emergency Diesel Generator System components.

REFERENCES: SD-005

SOURCE: New Significantly Modified Modified/Direct **X**

Bank Number EDG-05 004

JUSTIFICATION:

a. Plausible since this value is more than 1 which would be desirable for an emergency system. Actual number of starts available is at least 8.

b. Plausible since this value is more than 1 which would be desirable for an emergency system. Actual number of starts available is at least 8.

c. Plausible since this value is more than 1 which would be desirable for an emergency system. Actual number of starts available is at least 8.

d. **CORRECT** Starting air system provides at least 8 cold starts of diesel engine.

DIFFICULTY:
Comprehensive/Analysis Memory **X** Rating 2

Knowledge of design of diesel generator support system.

REFERENCES SUPPLIED: NONE

PSA RELATED

imposing a current flow (a flow of electrons) to the "holiday", eliminating the release of the electrons from the pipe. This process turns the pipe into a cathode rather than an anode.

The negative terminal of a rectifier is connected to the piping system being protected and the positive terminal is connected to the strategically located anodes. Current flow is caused by the resistive properties within the anodes, which provides the current flow from the anodes through the soil to the structures. Current flow can be adjusted via changing the rectifier output voltage. Current flow is directly proportional to the voltage and inversely proportional to the anode and soils resistivity; however, each anode has a maximum current draw of one amp. (As voltage increases the current increases.)

The adequacy of protection provided by the cathodic protection system is measured by a combination of several soil to structure potential measurements in between the anodes along the piping system being protected. The level of protection is evaluated against a minimum value of -850 mv. An increase in the negative potential is an increase in protection.

2.4.8 Starting Air

Each diesel has an associated starting air system consisting of an air compressor, air dryer, air receiver, two air-start solenoids, isolation valves, check valves, distributors and starting air headers. Starting air provides for at least eight cold starts of the engine. The air-start systems for each diesel can be cross-connected if necessary. However, in order to cross-connect, there are limitations to doing this. If the affected EDG starting air pressure is less than 150 psig AND both of the following exist: the cause of the low Starting Air pressure is understood AND cross-connecting with the other EDG will NOT result in the depressurization of both Starting Air Systems, THEN cross-connect.

There is enough stored air for eight cold starts. However, the EDG will only attempt to auto start once. This is due to the engine control system which is designed to stop cranking within 10 seconds. Failure of the engine to start within the timing period of the overcrank time (10 seconds) indicates a malfunction. Shutdown conserves the starting air supply so the engine can be subsequently started after the malfunction is corrected.

If the engine is not up to 200 RPM within 10 seconds after a start signal, a time delay relay (TD2) will pick up and result in energizing the shutdown relay (SDR) which will in turn reenergize and close the Air Start Solenoid Valves. If this overcrank alarm occurs, the diesel will have to be started locally from the control panel.

Technical Specification LCO 3.8.3 and SR 3.8.3.3 require starting air pressure to be ≥ 210 psig.

INFORMATION USE ONLY

Question: 33

Given the following conditions:

- The plant is operating at 18% power.
- All RCPs are running.

Which ONE (1) of the following will occur if RCP 'A' trips due to an undervoltage condition on its supply bus?

a. Reactor trips on Low Flow

b. Reactor trips on RCP Breaker Trip

c. Reactor trips on RCP Bus UV

d. Reactor remains critical

Answer:

d. Reactor remains critical

QUESTION NUMBER: 33
TIER/GROUP: 1/2

K/A: 007EA1.04
Ability to operate and monitor the following as they apply to a reactor trip: RCP operation and flow rates

K/A IMPORTANCE: RO 3.6

10CFR55 CONTENT: 55.41(b) RO 6

OBJECTIVE: RCS-10
Explain the trips associated with the Reactor Coolant System. Include purpose and setpoints.

REFERENCES: SD-011
Tech Spec 3.3.1

SOURCE: New Significantly Modified **X** Modified/Direct

Bank Number RCS-10 002

JUSTIFICATION:

a. Plausible since above P-8 this would result in a trip. Above P-7 and below P-8 low flow coincidence is 2/3 loops.

b. Plausible since above P-8 this would result in a trip. Above P-7 and below P-8 breaker trip coincidence is 2/3 breakers.

c. Plausible since 2/3 undervoltages would result in a trip. Coincidence is not met due to only 1/3 UV conditions.

d. **CORRECT** RCP Bus UV coincidence is 2/3 at all power levels above P-7 and the RCP breaker trip coincidence and the RCS loop low flow coincidence is 2/3 above P-7 and below P-8,

DIFFICULTY:
Comprehensive/Analysis **X** Memory Rating ~~3~~ 2 (S/C)

Comparison of reactor trip permissives and RCP trip conditions/power levels.

REFERENCES SUPPLIED: NONE

TUV and setpoints
15 1 pump
40 2 pump

Table 3.3.1-1 (page 3 of 7)
Reactor Protection System Instrumentation

FUNCTION	APPLICABLE MODES OR OTHER SPECIFIED CONDITIONS	REQUIRED CHANNELS	CONDITIONS	SURVEILLANCE REQUIREMENTS	ALLOWABLE VALUE	NOMINAL TRIP SETPOINT (1)
9. Reactor Coolant Flow – Low						
a. Single Loop	1(g)	3 per loop	N	SR 3.3.1.1 SR 3.3.1.7 SR 3.3.1.10	≥ 93.47%	94.26%
b. Two Loops	1(h)	3 per loop	M	SR 3.3.1.1 SR 3.3.1.7 SR 3.3.1.10	≥ 93.47%	94.26%
10. Reactor Coolant Pump (RCP) Breaker Position						
a. Single Loop	1(g)	1 per RCP	O	SR 3.3.1.14	NA	NA
b. Two Loops	1(h)	1 per RCP	M	SR 3.3.1.14	NA	NA
11. Undervoltage RCPs	1(f)	1 per bus	M	SR 3.3.1.9 SR 3.3.1.10	≥ 2959 V	3120 V
12. Underfrequency RCPs	1(f)	1 per bus	M	SR 3.3.1.10 SR 3.3.1.14	≥ 57.84 Hz	58.2 Hz
13. Steam Generator (SG) Water Level – Low Low	1,2	3 per SG	E	SR 3.3.1.1 SR 3.3.1.7 SR 3.3.1.10	≥ 15.36%	16%

(continued)

(1) A channel is OPERABLE with an actual Trip Setpoint value found outside its calibration tolerance band provided the Trip Setpoint value is conservative with respect to its associated Allowable Value and the channel is re-adjusted to within the established calibration tolerance band of the Nominal Trip Setpoint.
(f) Above the P-7 (Low Power Reactor Trips Block) interlock.
(g) Above the P-8 (Power Range Neutron Flux) interlock.
(h) Above the P-7 (Low Power Reactor Trips Block) interlock and below the P-8 (Power Range Neutron Flux) interlock.

4.1.5.7 Low Reactor Coolant Flow Trip (Figure 27)

a. The Low Reactor Coolant Flow Trip provides protection for the Reactor against DNB following a loss of coolant flow accident. The Low Reactor Coolant Flow Trip trips the Reactor when:

1. Above 10% (P-7) 2 out of 3 flow elements in 2 out of 3 Reactor Coolant Loops reaches the setpoint.

2. Above 40% (P-8) 2 out of 3 flow elements in 1 out of 3 Reactor Coolant Loops reaches the setpoint.

3. No trip occurs below 10% (P-7) for any Loss of Flow

b. Setpoint - FC-414, FC-415, FC-416/94.68%

FC-424, FC-425, FC-426/94.68%

FC-234, FC-435, FC-436/94.68%

4.1.5.8 Reactor Coolant Pump (RCP) Circuit Breaker Open Trip (Figure 27)

a. The RCP Circuit Breaker Open Trip provides protection for the Reactor against DNB following a loss of coolant flow accident. This trip will occur when:

1. Above 10% (P-7) 2 out of 3 RCP Breakers Open

2. Above 40% (P-8) 1 out of 3 RCP Breakers Open

3. No trip occurs below 10% (P-7) for any Loss of Flow

4.1.5.9 RCP Bus UV Trip (Figure 28)

a. The RCP Bus UV Trip provides protection for the Reactor against DNB as a result of a loss of voltage to more than one RCP. This trip occurs when an UV condition exists on 2 out of 3 RCP Buses when above 10% (P-7). This trip is automatically blocked below 10% (P-7).

This trip assures a Reactor Trip Signal is generated before the Low Flow Trip Setpoint is reached.

b. Setpoint - 75% of nominal Bus Voltage

INFORMATION USE ONLY

LOW PRIMARY COOLANT FLOW REACTOR TRIP LOGIC

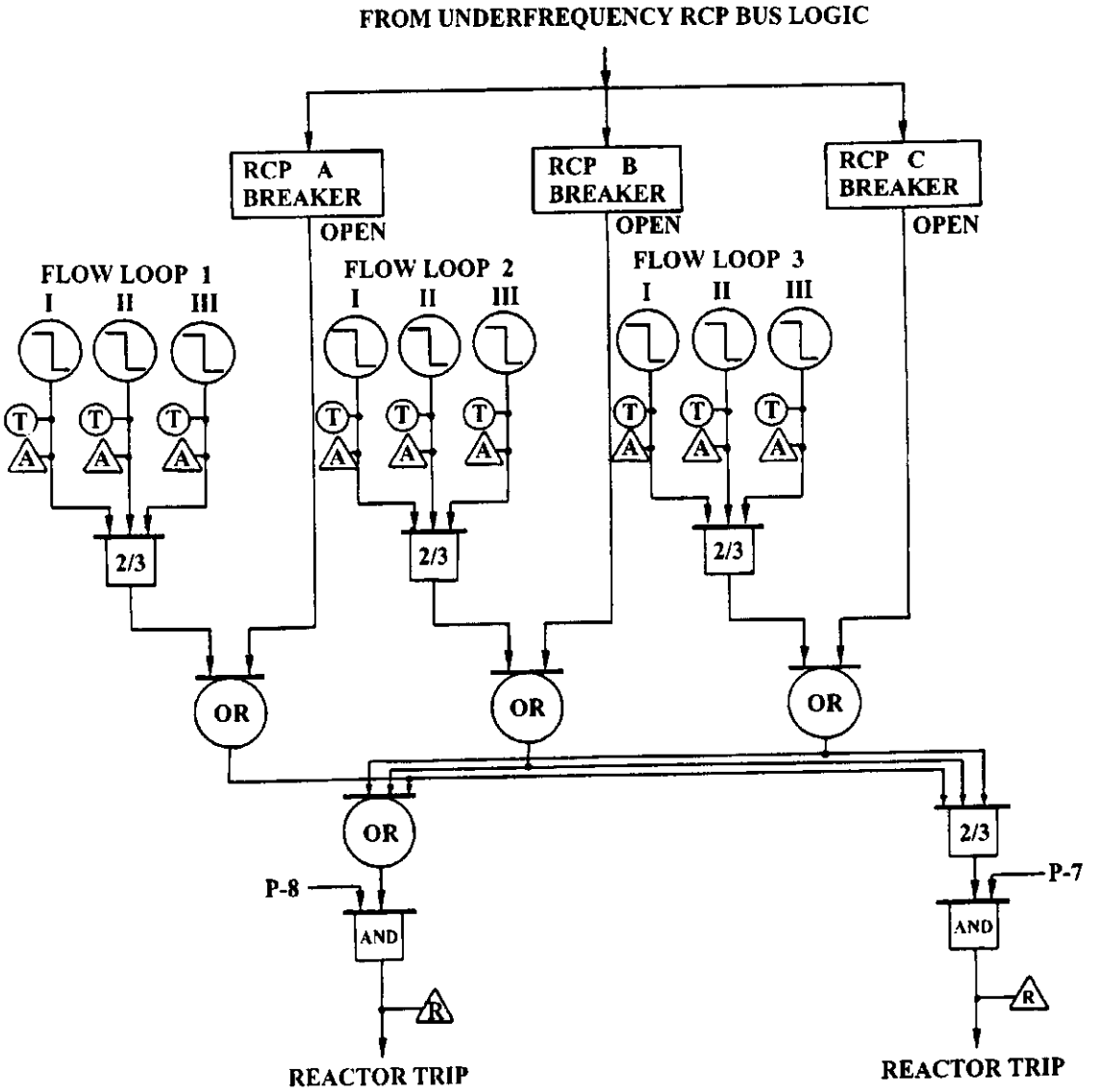

UNDERVOLTAGE & UNDERFREQUENCY RCP BUS LOGIC

RPS-FIGURE-28 (Rev . 0)

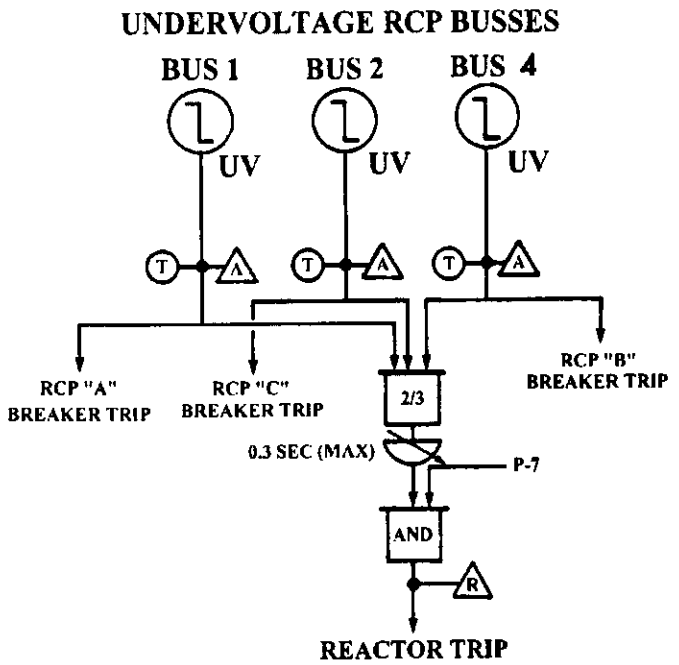

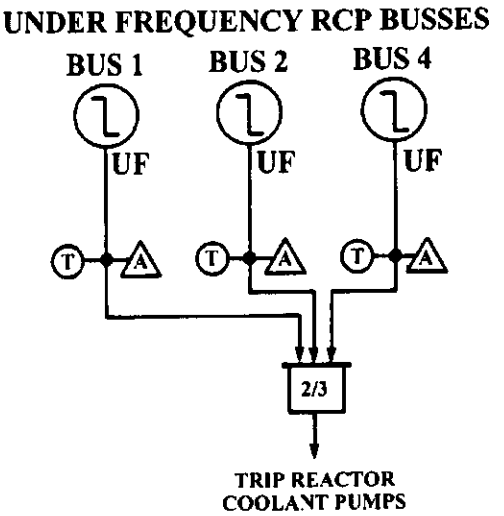

RCS-10 002

Which ONE (1) of the following describes what will cause all three RCP breakers to trip open?

A. an undervoltage condition on 2/3 RCP buses.

✓B. an underfrequency condition on 2/3 RCP buses.

C. a low flow condition in 2/3 RCS loops.

D. a blackout signal from 2/2 480v emergency busses.

Question: 34

Given the following conditions:

- A plant cooldown is in progress in accordance with GP-007, "Plant Cooldown From Hot Shutdown to Cold Shutdown."
- RCS pressure has been reduced below 2000 psig.
- SI has been blocked by placing the PZR PRESS/HI STM LINE ΔP Block/Unblock switch momentarily in the BLOCK position.
- During a stop in the RCS depressurization, RCS pressure increases to 2040 psig.

Which ONE (1) of the following actions should be taken?

a. Block the SI signals again, prior to decreasing RCS pressure below 2000 psig.

b. Continue with the RCS depressurization since the SI block signals "seal-in."

c. Block the SI signals again, after decreasing RCS pressure below 2000 psig.

d. Continue with the RCS depressurization since the SI automatic unblock occurs at 2235 psig.

Answer:

c. Block the SI signals again, after decreasing RCS pressure below 2000 psig.

QUESTION NUMBER: 34
TIER/GROUP: 2/2

K/A: 010K3.03
Knowledge of the effect that a loss or malfunction of the PZR PCS will have on the ESFAS

K/A IMPORTANCE: RO 4.0

10CFR55 CONTENT: 55.41(b) RO 7

OBJECTIVE: ESF-09
Explain the normal operation of the ESFAS control systems. Include function, instrumentation, interlocks, annunciators, and setpoints.

REFERENCES: GP-007

SOURCE: New **X** Significantly Modified Modified/Direct

Bank Number NEW

JUSTIFICATION:

a. Plausible since block will have to be performed again. Must be below 2000 psig to meet permissive to block SI.

b. Plausible since many signals associated with ESF are seal-in signals. SI block automatically unblocks if pressure exceeds 2000 psig.

c. **CORRECT** SI automatically unblocks if pressure increases above 2000 psig. Requires pressure be lowered below 2000 psig and block then re-instated.

d. Plausible since this is normal operating pressure and SI is unblock under normal conditions. SI block automatically unblocks above 2000 psig.

DIFFICULTY:
Comprehensive/Analysis **X** Memory Rating 3

Analysis of effect of changing RCS pressure on status of SI block signals.

REFERENCES SUPPLIED: NONE

NOTE: Adjusting PC-444J setpoint potentiometer to 0.0 will reduce RCS pressure to 1700 psig. PC-444J controller setpoint shall be adjusted SLOWLY to minimize the potential for causing a PZR insurge. An insurge could occur if PC-444J setpoint is adjusted too quickly.

The PZR cooldown rate shall be less than or equal to 200°F/hr. The PZR heatup rate shall be less than or equal to 100°F/hr. (TRMS 3.4)

The following is a continuous action step and shall be performed when conditions require.

3. **IF** PZR Surge line temperature decreases **AND** is not due to the normal temperature decrease associated with depressurization, **THEN** stop adjusting PC-444J setpoint until PZR Surge Line temperature is increasing. ____

4. Slowly adjust PC-444J, PZR PRESS 444J, controller setpoint potentiometer to 0.0 without exceeding 200°F/hr cooldown rate on the PZR **AND** continue with this procedure. ____

CAUTION

To prevent an SI Actuation, steam line pressure shall not be allowed to drop below 485 psig prior to blocking the HI STM LINE DP SI Signal.

The PZR PRESS/HI STM LINE DP SI Signal will automatically unblock if RCS pressure increases above 2000 psig. If this occurs, the signal should be blocked when RCS pressure decreases below 2000 psig.

8.2.16 **WHEN** RCS pressure is less than 2000 psig, **THEN** perform the following:

1. Display the following ERFIS points: (ACR 93-00023)

   - RCP0496D, LO PRESS SI BLOCK TRAIN "A" ____
   - RCP0497D, LO PRESS SI BLOCK TRAIN "B" ____

Question: 35

Given the following conditions:

- The unit is at 100% power.
- CCW Heat Exchanger outlet temperature is 106°F and increasing slowly.
- Lake Robinson temperature is 91°F.
- Service Water System pressure is 48 psig.
- The highest reading RCP Motor bearing temperature is 180°F and increasing slowly.

Which ONE (1) of the following describes the appropriate response?

a. Start standby SW pump

b. Trip the Reactor and stop the RCPs

c. Reduce heat loads on CCW system

d. Start standby CCW Pump

Answer:

c. Reduce heat loads on CCW system

QUESTION NUMBER: 35
TIER/GROUP: 1/1

K/A: 026AA2.04
Ability to determine and interpret the following as they apply to the Loss of Component Cooling Water: The normal values and upper limits for the temperatures of the components cooled by CCW

K/A IMPORTANCE: RO 2.5

10CFR55 CONTENT: 55.41(b) RO 4

OBJECTIVE: AOP-014-03
Demonstrate an understanding of selected steps, cautions, and notes in AOP-014 by explaining the basis of each.

REFERENCES: AOP-014

SOURCE: New Significantly Modified Modified/Direct **X**

Bank Number AOP-014-03 002

JUSTIFICATION:

a. Plausible since inadequate SW cooling could result in high CCW temperatures. SW pressure is adequate at high end of 40 – 50 psig required range.

b. Plausible since RCP trips are required if RCP bearing temperatures exceed limits. RCP trip criteria is much higher than the given temperature.

c. **CORRECT** Rising CCW temperature indicates that excessive heat loads are placed on the system for given lake/SW conditions.

d. Plausible since inadequate CCW flow could cause CCW temperature to be high if taken alone. Other parameters (lake temp) indicate this is a result, not a cause.

DIFFICULTY:
Comprehensive/Analysis **X** Memory Rating 3

Analysis of given plant conditions to determine required course of action.

REFERENCES SUPPLIED: NONE

PSA RELATED

STEP	INSTRUCTIONS	RESPONSE NOT OBTAINED

SECTION D

CCW SYSTEM LOW FLOW OR HIGH TEMPERATURE

(Page 3 of 5)

5.	Check Service Water Availability To CCW As Follows:	
	a. Check Service Water pressure - 40 psig TO 50 PSIG	a. IF SW pressure is low, THEN start SW Pumps as necessary to obtain 40 psig to 50 psig. IF SW pressure is high, THEN stop pumps as necessary to obtain 40 psig to 50 psig.
	b. Check Lake Temperature - LESS THAN 90°F	b. Perform the following: 1) Check PLP-023, Environmental Regulatory Compliance Responsibilities, NPDES Discharge Temperature Compliance Plan. 2) Consult Plant Staff to determine necessity for power reduction.

STEP	INSTRUCTIONS	RESPONSE NOT OBTAINED

SECTION D

CCW SYSTEM LOW FLOW OR HIGH TEMPERATURE

(Page 4 of 5)

6.	Reduce Heat Loads On The CCW System As Necessary To Maintain Temperature	
	a. Stop Waste Gas Compressor(s)	
	b. Secure excess letdown	
	c. Check RHR - IN CORE COOLING MODE	c. Go To Step 6.e.
	d. Minimize RCS cooldown rate	
	e. Decrease number of Charging Pumps in service	
	f. Throttle CC-775, CC FROM SPENT FUEL PIT HX BUTTERFLY, to maintain SFP temperature between 115°F and 120°F (located East of Heat Exchanger 9 foot above floor)	
7.	Check CCW Temperature - • LESS THAN 105°F AND • STABLE OR DECREASING	Go To Step 9.
8.	Go To The MAIN BODY, Step 3, Of This Procedure	

Question: 35

Given the following conditions:

- The unit is at 100% power.
- CCW Heat Exchanger outlet temperature is 106°F and increasing slowly.
- Lake Robinson temperature is 91°F.
- The highest reading RCP Motor bearing temperature is 180°F and increasing slowly.

Which ONE (1) of the following describes the appropriate response?

not plausible

a. Check RCP Oil Reservoir level — not a response

b. Trip the Reactor and stop the RCPs — a reasonable way to low

c. Reduce heat loads on CCW system

d. Start standby CCW Pump

Answer:

c. Reduce heat loads on CCW system

QUESTION NUMBER: 35
TIER/GROUP: 1/1

K/A: 026AA2.04
Ability to determine and interpret the following as they apply to the Loss of Component Cooling Water: The normal values and upper limits for the temperatures of the components cooled by CCW

K/A IMPORTANCE: RO 2.5

10CFR55 CONTENT: 55.41(b) RO 4

OBJECTIVE: AOP-014-03
Demonstrate an understanding of selected steps, cautions, and notes in AOP-014 by explaining the basis of each.

REFERENCES: AOP-014

SOURCE: New Significantly Modified Modified/Direct **X**

Bank Number AOP-014-03 002

JUSTIFICATION:

a. Plausible since this could be a cause of rising RCP bearing temperatures if taken alone. Other parameters indicate that this is not a cause, but a result.

b. Plausible since RCP trips are required if RCP bearing temperatures exceed limits. RCP trip criteria is much higher than the given temperature.

c. **CORRECT** Rising CCW temperature indicates that excessive heat loads are placed on the system for given lake/SW conditions.

d. Plausible since inadequate CCW flow could cause CCW temperature to be high if taken alone. Other parameters (lake temp) indicate this is a result, not a cause.

DIFFICULTY:
Comprehensive/Analysis **X** Memory Rating 3

Analysis of given plant conditions to determine required course of action.

REFERENCES SUPPLIED: NONE

PSA RELATED

Question: 36

Given the following conditions:

- A Natural Circulation Cooldown is in progress.
- Channel 1 of the ICCM System is out-of-service.
- An ERROR code on Channel 2 of the ICCM System, is received, indicating that **ALL** CET inputs are **BAD**.

Subcooling can still be determined by the Channel 2 Subcooling Margin Monitor using ...

a. loop cold leg temperatures and pressurizer pressure.

b. loop hot leg temperatures and pressurizer pressure.

c. loop cold leg temperatures and wide range RCS pressure.

d. loop hot leg temperatures and wide range RCS pressure.

Answer:

d. loop hot leg temperatures and wide range RCS pressure.

QUESTION NUMBER: 36
TIER/GROUP: 2/1

K/A: 017K3.01
Knowledge of the effect that a loss or malfunction of the ITM system will have on the following:
Natural circulation indications

K/A IMPORTANCE: RO 3.5

10CFR55 CONTENT: 55.41(b) RO 6

OBJECTIVE: ICCM-05
Describe the performance and design attributes of the major ICCM components.

REFERENCES: SD-051

SOURCE: New Significantly Modified **X** Modified/Direct

Bank Number ICCM-04 004

JUSTIFICATION:

a. Plausible since a subcooling value can be obtained using these parameters. Uses hot leg temperatures and wide range RCS pressure.

b. Plausible since a subcooling value can be obtained using these parameters. Uses hot leg temperatures and wide range RCS pressure.

c. Plausible since a subcooling value can be obtained using these parameters. Uses hot leg temperatures and wide range RCS pressure.

d. **CORRECT** ICCM calculates subcooling margin based on both the CETs and dedicated wide range RCS pressure (SUBCOOL T/C) and hot leg temperatures and dedicated wide range RCS pressure (SUBCOOL RTD).

DIFFICULTY:
Comprehensive/Analysis Memory **X** Rating 2

Knowledge of inputs to ICCM system.

REFERENCES SUPPLIED: NONE

The ICCM microprocessor compensates by monitoring average temperature of the RTDs imbedded in the copper block. The RJB is a passive style, there are no heaters to maintain constant temperature. The copper wiring completes the circuit path through the CV penetrations to the ICCM cabinets.

In cold shutdown or refueling, any CET reading of $\geq$ **160°F** will generate an alarm on the auxiliary annunciator alarm panel, ICCM HI TEMP, APP-36-C1.

3.9 Subcooled Margin Monitor

3.9.1 Microprocessor

The microprocessor calculates the amount of RCS subcooling or superheating (for ease of explanation, we will refer only to subcooling during this discussion). There are two separate numbers generated in each train: (See Figure 15).

- Subcooling based on the average of the 5 highest CETs and dedicated wide range RCS pressure. The plasma screen indicates "SUBCOOL (T/C)" followed by a temperature value.

- Subcooling based on hot leg RTDs and dedicated wide range RCS pressure. The plasma screen indicates "SUBCOOL (RTD)" followed by a temperature value. Train A uses the highest of the 2 hot leg RTDs (loops 1 & 2) while Train B only has one RTD (loop 3).

- The subcooled values are positive while the superheated values are negative number

3.9.2 Dedicated Wide Range Pressure Transmitters

There is one pressure transmitter (PT) per train (PT-511AA for train A, PT-511BA for train B). Each one senses the pressure in a capillary line attached to the hot leg. This allows the transmitters to be located outside the CV. The outputs from the PT provides indication of RCS pressure from 0-3000 psig, it is used in the SMM to calculate subcooling, and in RVLIS for vessel water density compensation.

4.0 **INSTRUMENTATION**

4.1 Hydraulic Isolators

These are located in the Rod Control Room of the Aux. Building. Face plates located on hydraulic isolators indicate bellows displacement. (See Figure 16).They have a

INFORMATION USE ONLY

ICCM-04 004

Which ONE (1) of the following is an input signal to the Subcooling Margin Monitor?

A. Pressurizer Pressure

B. Narrow range RCS pressure

C. Wide range cold leg RTD's

✓D. Average temperature of the 5 highest thermocouples

Question: 37

Given the following plant conditions:

RHR is in service.
RCP "A" is operating.
RCPs "B" and "C" are secured.
RCP "A" #1 Seal Leakoff temperature is approaching the alarm setpoint.

Which ONE (1) of the following conditions would prohibit opening CVC-307, PRI SEAL BYP ISO?

a.
- RCS pressure is 290 psig
- RCS temperature is 215 °F.
- RHR HX discharge temperature is 208 °F.

b.
- CVC-303A, RCP "A" #1 Seal Leakoff valve is open
- CVC-303B, RCP "B" #1 Seal Leakoff valve is closed
- CVC-303C, RCP "C" #1 Seal Leakoff valve is closed

c.
- RCP "A" #1 seal leakoff flow rate is 0.8 gpm
- RCP "B" #1 seal leakoff flow rate is 0 gpm
- RCP "C" #1 seal leakoff flow rate is 0 gpm

d.
- Seal injection flow rate to RCP "A" is 11 gpm
- Seal injection flow rate to RCP "B" is 8 gpm
- Seal injection flow rate to RCP "C" is 7 gpm

Answer:

b.
- CVC-303A, RCP "A" #1 Seal Leakoff valve is open
- CVC-303B, RCP "B" #1 Seal Leakoff valve is closed
- CVC-303C, RCP "C" #1 Seal Leakoff valve is closed

QUESTION NUMBER: 37
TIER/GROUP: 3

K/A: 2.1.32
Ability to explain and apply all system limits and precautions.

K/A IMPORTANCE: RO 3.4

10CFR55 CONTENT: 55.41(b) RO 4

OBJECTIVE: RC-08
Explain the component operation associated with each switch position for the Reactor Coolant System switches/controls.

REFERENCES: OP-101

SOURCE: New Significantly Modified **X** Modified/Direct

Bank Number RC-08 002

JUSTIFICATION:

a. Plausible since RCS pressure is a requirement which must be met to open CVC-307. Pressure is required to be between 100 and 1000 psig.

b. **CORRECT** CVC-303A/B/C must all be open to open CVC-307.

c. Plausible since this is a requirement which must be met to open CVC-307. At least 1 leakoff flow must be below 1 gpm.

d. Plausible since this is a requirement which must be met to open CVC-307. All seal injection flows must be greater than 6 gpm.

DIFFICULTY:
Comprehensive/Analysis **X** Memory Rating 3

Application of abnormal RCP conditions to system precautions and limitations.

REFERENCES SUPPLIED: NONE

4.2.1 (Continued)

10. The No. 1 Seal Bypass Valve is used when RCS pressure is less than 1000 psig, to prevent the RCP pump bearing temperature and the No. 1 seal leakoff temperature from reaching alarm levels. Prior to opening CVC-307, PRI SEAL BYP ISO, the following conditions shall all be satisfied:

    a. RCS pressure is between 100 and 1000 psig.

    b. All three No. 1 Seal Leakoff valves (CVC-303A, B, C) are open.

    c. Any No. 1 seal leakoff flow rate is less than 1 gpm.

    d. Seal injection flow rate to each RCP is greater than 6 gpm.

11. Any change greater than 10°F on No. 1 and No. 2 seal leak-off for unknown reasons should be investigated.

12. Only one RCP is to be started at any one time.

13. A Reactor Coolant Pump should not be operated continuously until the RCS has been thoroughly vented.

14. If Component Cooling Water flow to the RCP motor is lost, the RCP shall be stopped before either the upper or lower bearing temperature has increased to 200°F IAW AOP-014. (CR 95-02015 and ESR 95-01075)

15. Two Containment Fan Coolers are required for normal operation with RCS temperature greater than 140°F. The intent of this requirement is to maintain RCP motor winding temperature less than 248°F.

RCS-08 002
Given the following plant conditions:

- The unit is currently on RHR
- RCS temperature is 230°F
- The "A" RCP is running.
- An RCS heatup is in progress.

Which ONE (1) of the following will procedurally PREVENT the opening of CVC-307, RCP Primary Seal Bypass Isolation Valve?

A. RCP "A" seal leakoff flow is 0.5 gpm.

✓B. CVC-303B, No. 1 Seal leakoff valve is closed.

C. Seal injection flow is 9 gpm.

D. RCP "A" pump motor temperatures are 150 degrees.

b

Question: 37

Given the following plant conditions:

RHR is in service.
RCP "A" is operating.
RCPs "B" and "C" are secured.
RCP "A" #1 Seal Leakoff temperature is approaching the alarm setpoint.

Which ONE (1) of the following conditions would prohibit opening CVC-307, PRI SEAL BYP ISO?

a. • RCS pressure is 290 psig ← RHR T, RCS T

b. • CVC-303A, RCP "A" #1 Seal Leakoff valve is open
• CVC-303B, RCP "B" #1 Seal Leakoff valve is closed
• CVC-303C, RCP "C" #1 Seal Leakoff valve is closed

c. • RCP "A" #1 seal leakoff flow rate is 0.8 gpm
• RCP "B" #1 seal leakoff flow rate is 0 gpm
• RCP "C" #1 seal leakoff flow rate is 0 gpm

d. • Seal injection flow rate to RCP "A" is 11 gpm
• Seal injection flow rate to RCP "B" is 8 gpm
• Seal injection flow rate to RCP "C" is 7 gpm

Answer:

b. • CVC-303A, RCP "A" #1 Seal Leakoff valve is open
• CVC-303B, RCP "B" #1 Seal Leakoff valve is closed
• CVC-303C, RCP "C" #1 Seal Leakoff valve is closed

QUESTION NUMBER: 37
TIER/GROUP: 3

K/A: 2.1.32
Ability to explain and apply all system limits and precautions.

K/A IMPORTANCE: RO 3.4

10CFR55 CONTENT: 55.41(b) RO 4

OBJECTIVE: RC-08
Explain the component operation associated with each switch position for the Reactor Coolant System switches/controls.

REFERENCES: OP-101

SOURCE: New Significantly Modified **X** Modified/Direct

Bank Number RC-08 002

JUSTIFICATION:

a. Plausible since this is a requirement which must be met to open CVC-307. Pressure is required to be between 100 and 1000 psig.

b. **CORRECT** CVC-303A/B/C must all be open to open CVC-307.

c. Plausible since this is a requirement which must be met to open CVC-307. At least 1 leakoff flow must be below 1 gpm.

d. Plausible since this is a requirement which must be met to open CVC-307. All seal injection flows must be greater than 6 gpm.

DIFFICULTY:
Comprehensive/Analysis **X** Memory Rating 3

Application of abnormal RCP conditions to system precautions and limitations.

REFERENCES SUPPLIED: NONE

Question: 38

Given the following conditions:

- The crew is performing EPP-012, "Post-SGTR Cooldown Using Backfill."
- RCS and Ruptured S/G pressures are both 845 psig .
- Pressurizer liquid temperature is 480 °F.
- The crew fails to raise pressurizer liquid temperature to saturation for the ruptured S/G pressure (527 °F) prior to attempting to depressurize the RCS.

Which ONE (1) of the following describes the response of the plant when the Pressurizer Spray Valve is opened?

	PRESSURIZER LEVEL	**RUPTURED SG LEVEL**	**REACTOR VESSEL LEVEL**
a.	Decreases	**NO** Change	Decreases
b.	Increases	Decreases	**NO** Change
c.	Decreases	Increases	**NO** Change
d.	Increases	**NO** Change	Decreases

Answer:

b.	Increases	Decreases	**NO** Change

QUESTION NUMBER: 38
TIER/GROUP: 1/3

K/A: 028AK3.03
Knowledge of the reasons for the following responses as they apply to the Pressurizer Level Control Malfunctions: False indication of PZR level when PORV or spray valve is open and RCS saturated

K/A IMPORTANCE: RO 3.5

10CFR55 CONTENT: 55.41(b) RO 10

OBJECTIVE: EPP-012-03
Demonstrate an understanding of selected steps, cautions, and notes in EPP-12 by explaining the basis of each.

REFERENCES: EPP-12
EPP-12 Basis

SOURCE: New Significantly Modified **X** Modified/Direct

Bank Number EPP-012-03 006

JUSTIFICATION:

a. Plausible since a level drop in RVLIS would occur if the RCS were not subcooled. Pressure actually drops and level rises in the pressurizer and drops in the SG with no change in RVLIS.

b. **CORRECT** With the pressurizer liquid temperature below saturation, opening the spray valve will cause pressure to drop rapidly and level to rise as the SG backflows into the RCS.

c. Plausible since a level drop in the pressurizer would result in a level rise in the ruptured SG. Pressure actually drops and level rises in the pressurizer and drops in the SG with no change in RVLIS.

d. Plausible since level will rise in the pressurizer and lower in the reactor vessel if the head were at saturation conditions. RCS is subcooled so no change in RVLIS will occur.

DIFFICULTY:
Comprehensive/Analysis **X** Memory Rating 3

Analysis of plant response when pressurizer is not saturated.

REFERENCES SUPPLIED: NONE

RNP STEP	WOG STEP	BASIS/DIFFERENCES

3 N1

WOG BASIS

PURPOSE: To remind the operator that the foldout page for ES-3.1 should be open

BASIS:

The foldout page provides a list of important items that should be continuously monitored. If any of the parameters exceed their limits the appropriate operations should be initiated. Refer to the section FOLDOUT PAGE in this background document and the document FOLDOUT PAGE ITEMS in the Generic Issues section of the EXECUTIVE VOLUME for additional information on which foldout page items apply to this guideline and sample wording of those items.

RNP DIFFERENCES/REASONS

The RNP procedure places the action in steps rather than within a caution or note, as per the writer's guide.

SSD DETERMINATION

This is an SSD per criterion 11.

4 N/A

WOG BASIS

N/A, this step is not in the WOG ERG.

RNP DIFFERENCES/REASONS

Plant modification M-1092 provides a manual reset of the IVSW System. IVSW reset is necessary after an SI to due to subsequent valve manipulations..

SSD DETERMINATION

This is an SSD per criterion 10.

5 1

WOG BASIS

PURPOSE: To saturate the water in the pressurizer to minimize any RCS pressure transients due to restarting an RCP, initiating pressurizer spray, or opening a pressurizer PORV

BASIS:

Following a steam generator tube rupture, hot water is drained from the pressurizer. Subsequent recovery actions fill the pressurizer with highly subcooled water. Spraying into the steam space or opening a PORV under these conditions could rapidly decrease RCS pressure and subcooling. In addition, criteria for RCP restart which address collapse of an upper head void were calculated based on saturated pressurizer conditions. Consequently, to minimize any RCS pressure transient, the pressurizer water should be saturated. However, since excessive operation of pressurizer heaters will tend to increase RCS pressure and, therefore, reinitiate primary-to-secondary leakage, they should be used only as necessary to maintain RCS pressure equal to the ruptured steam generator pressure.

KNOWLEDGE:

- Pressurizer heaters are not essential for success of subsequent recovery actions. However, the operator should be aware that changes in RCS pressure may occur more rapidly and may be greater if the pressurizer water is subcooled. In addition, RCS pressure may slowly decrease and pressurizer level slowly increase as the steam and water temperatures equalize.
- If pressurizer heaters are available, the pressurizer water should be saturated before restarting an RCP (see Step 36 of guideline E-3). This will minimize the decrease in pressurizer level and RCS subcooling if the pump is started with a steam bubble in the upper head.

STEP	INSTRUCTIONS	RESPONSE NOT OBTAINED
4.	In The Computer Room, Reset The IVSW System As Follows: • Depress the IVSW RESET PCV-1922A Pushbutton in Relay Cabinet ARP-1 • Depress the IVSW RESET PCV-1922B Pushbutton in Relay Cabinet ARP-2	
5.	Check TI-453, PRZR LIQUID TEMP - AT SATURATION FOR RUPTURED S/G PRESSURE	Establish saturated conditions as follows: a. Verify CLOSED PZR SPRAY <u>AND</u> AUX SPRAY Valves. b. Energize all available PZR Heaters. c. <u>WHEN</u> TI-453, PRZR LIQUID TEMP, indicates saturation temperature for ruptured S/G pressure, <u>THEN</u> operate PZR Heaters <u>AND</u> Spray as necessary to maintain PZR saturated at ruptured S/G pressure. Go To Step 6.
6.	Determine If SI Accumulators Should Be Isolated: a. Check both of the following conditions exist: • RCS subcooling - GREATER THAN 35°F [55°F] <u>AND</u> • PZR level - GREATER THAN 10% [26%]	a. Go To EPP-17, SGTR With Loss Of Reactor Coolant: Subcooled Recovery.

STEP	INSTRUCTIONS	RESPONSE NOT OBTAINED
4.	In The Computer Room, Reset The IVSW System As Follows: • Depress the IVSW RESET PCV-1922A Pushbutton in Relay Cabinet ARP-1 • Depress the IVSW RESET PCV-1922B Pushbutton in Relay Cabinet ARP-2	
5.	Check TI-453, PRZR LIQUID TEMP - AT SATURATION FOR RUPTURED S/G PRESSURE	Establish saturated conditions as follows: a. Verify CLOSED PZR SPRAY <u>AND</u> AUX SPRAY Valves. b. Energize all available PZR Heaters. c. <u>WHEN</u> TI-453, PRZR LIQUID TEMP, indicates saturation temperature for ruptured S/G pressure, <u>THEN</u> operate PZR Heaters <u>AND</u> Spray as necessary to maintain PZR saturated at ruptured S/G pressure. Go To Step 6.
6.	Determine If SI Accumulators Should Be Isolated: a. Check both of the following conditions exist: • RCS subcooling - GREATER THAN 35°F [55°F] <u>AND</u> • PZR level - GREATER THAN 10% [26%]	a. Go To EPP-17, SGTR With Loss Of Reactor Coolant: Subcooled Recovery.

RNP STEP	WOG STEP	BASIS/DIFFERENCES

3 N1

WOG BASIS

PURPOSE: To remind the operator that the foldout page for ES-3.1 should be open

BASIS:

The foldout page provides a list of important items that should be continuously monitored. If any of the parameters exceed their limits the appropriate operations should be initiated. Refer to the section FOLDOUT PAGE in this background document and the document FOLDOUT PAGE ITEMS in the Generic Issues section of the EXECUTIVE VOLUME for additional information on which foldout page items apply to this guideline and sample wording of those items.

RNP DIFFERENCES/REASONS

The RNP procedure places the action in steps rather than within a caution or note, as per the writer's guide.

SSD DETERMINATION

This is an SSD per criterion 11.

4 N/A

WOG BASIS

N/A, this step is not in the WOG ERG.

RNP DIFFERENCES/REASONS

Plant modification M-1092 provides a manual reset of the IVSW System. IVSW reset is necessary after an SI to due to subsequent valve manipulations..

SSD DETERMINATION

This is an SSD per criterion 10.

5 1

WOG BASIS

PURPOSE: To saturate the water in the pressurizer to minimize any RCS pressure transients due to restarting an RCP, initiating pressurizer spray, or opening a pressurizer PORV

BASIS:

Following a steam generator tube rupture, hot water is drained from the pressurizer. Subsequent recovery actions fill the pressurizer with highly subcooled water. Spraying into the steam space or opening a PORV under these conditions could rapidly decrease RCS pressure and subcooling. In addition, criteria for RCP restart which address collapse of an upper head void were calculated based on saturated pressurizer conditions. Consequently, to minimize any RCS pressure transient, the pressurizer water should be saturated. However, since excessive operation of pressurizer heaters will tend to increase RCS pressure and, therefore, reinitiate primary-to-secondary leakage, they should be used only as necessary to maintain RCS pressure equal to the ruptured steam generator pressure.

KNOWLEDGE:

- Pressurizer heaters are not essential for success of subsequent recovery actions. However, the operator should be aware that changes in RCS pressure may occur more rapidly and may be greater if the pressurizer water is subcooled. In addition, RCS pressure may slowly decrease and pressurizer level slowly increase as the steam and water temperatures equalize.
- If pressurizer heaters are available, the pressurizer water should be saturated before restarting an RCP (see Step 36 of guideline E-3). This will minimize the decrease in pressurizer level and RCS subcooling if the pump is started with a steam bubble in the upper head.

EPP-012-03 006

In procedure EPP-012, "Post-SGTR Cooldown Using Backfill", PZR liquid temperature is adjusted to saturation for the ruptured S/G pressure. Which ONE (1) of the following is the basis for this?

A. To cool the hot PZR liquid to equalize the pressure in the PZR and the ruptured S/G and reduce the break flow

✓B. To heat the highly subcooled water that refills the PZR from SI flow to prevent an uncontrolled pressure decrease if PZR spray is initiated or a PZR PORV is opened

C. To cool the PZR liquid to minimize the potenetial of thermal shock to the PZR surge line on an out-surge from the PZR

D. To heat the highly subcooled PZR liquid and increase PZR pressure in order to collapse the voids in reactor vessel head

Question: 38

Given the following conditions:

- The crew is performing EPP-012, "Post-SGTR Cooldown Using Backfill."
- Ruptured S/G pressure is 845 psig and pressurizer liquid temperature is 480 °F.
- The crew fails to raise pressurizer liquid temperature to saturation for the ruptured S/G pressure (527 °F) prior to attempting to depressurize the RCS.

Which ONE (1) of the following describes the response of the pressurizer when the Pressurizer Spray Valve is opened?

	PRESSURIZER PRESSURE	PRESSURIZER LEVEL
a.	Decreases	Decreases
b.	Decreases	Increases
c.	Increases	Decreases
d.	Increases	Increases

not plausible w/ spray valve open.

Answer:

b.	Decreases	Increases

QUESTION NUMBER: 38
TIER/GROUP: 1/3

K/A: 028AK3.03
Knowledge of the reasons for the following responses as they apply to the Pressurizer Level Control Malfunctions: False indication of PZR level when PORV or spray valve is open and RCS saturated

K/A IMPORTANCE: RO 3.5

10CFR55 CONTENT: 55.41(b) RO 10

OBJECTIVE: EPP-012-03
Demonstrate an understanding of selected steps, cautions, and notes in EPP-12 by explaining the basis of each.

REFERENCES: EPP-12
EPP-12 Basis

SOURCE: New Significantly Modified **X** Modified/Direct

Bank Number EPP-012-03 006

JUSTIFICATION:

a. Plausible since pressure drops rapidly due to pressurizer not being at saturation. Level rises due to SG backflow to RCS.

b. **CORRECT** With the pressurizer liquid temperature below saturation, opening the spray valve will cause pressure to drop rapidly and level to rise as the SG backflows into the RCS.

c. Plausible since a pressure rise would result in level dropping as SG tube leakage would rise. Pressure actually drops and level rises.

d. Plausible since level will rise as the SG backflows to the RCS. Pressure actually lowers rapidly.

DIFFICULTY:
Comprehensive/Analysis **X** Memory Rating 3

Analysis of plant response when pressurizer is not saturated.

REFERENCES SUPPLIED: NONE

Question: 39

Which ONE (1) of the following push buttons located on an RMS rate meter drawer in the Control Room can be depressed to verify the operability of the RMS drawer **AND** the rate meter?

a. CHECK SOURCE

b. CKT TEST

c. ALARM/RESET

d. FAIL

Answer:

a. CHECK SOURCE

QUESTION NUMBER: 39
TIER/GROUP: 2/2

K/A: 073A4.03
Ability to manually operate and/or monitor in the control room: Check source for operability demonstration

K/A IMPORTANCE: RO 3.1

10CFR55 CONTENT: 55.41(b) RO 11

OBJECTIVE: RM-08
Explain the component operation associated with each switch position for the RM System switches and controls.

REFERENCES: OP-920
SD-019

SOURCE: New Significantly Modified Modified/Direct **X**

Bank Number RM-08 001

JUSTIFICATION:

a. **CORRECT** When depressing this button, an upscale reading indicates the check source circuit and detector circuit are operating properly.

b. Plausible since this is push button on the RMS control panel. Depressing this push button performs a check of the microprocessor for the channel.

c. Plausible since this is push button on the RMS control panel. Depressing this push button with no alarm condition will cause the alarm setpoint to display, while depressing it with an alarm condition will cause the alarm to reset.

d. Plausible since this is an indication on the RMS control panel. Monitors for circuit failure which is reset using the Alarm/Reset push button.

DIFFICULTY:
Comprehensive/Analysis Memory **X** Rating 2

Knowledge of function of RMS controls.

REFERENCES SUPPLIED: NONE

6.2 Source Check of Radiation Monitors

6.2.1 Source Check for Monitors R-1, R-2, R-3, R-4, R-5, R-6, R-7, R-8, R-9, R-11, R-12, R-15, R-16, R-17, R-18, R-20, R-21, R-30, R-31A, R-31B, R-31C and R-33:

1. Depress AND hold the CHECK SOURCE Button.

2. Verify the CHECK SOURCE light is ILLUMINATED.

3. Verify the RATEMETER display INCREASES.

6.2.2 Source Check for Monitors R-14A, R-14B, R-14C, R-14D and R-14E will be performed by E&C IAW the applicable sections of EMP-013 and EMP-024.

6.2.3 Source Check for Monitors R-19A, R-19B and R-19C will be performed by E&C IAW the applicable sections of EMP-024 and EMP-027.

6.2.4 Source Check for Monitors R-32A and R-32B:

1. Depress and hold the ECS (Electronic Check Source) button to check for a response of each monitor.

2. Verify the RATEMETER display INCREASES.

6.2.5 Source Check for Monitor R-37 will be performed by RC IAW the applicable sections of RST-001.

3.2.1 NRC Monitors (channels R-11, R-12, R-15, R-16, R-17, R-18, R-20, R-21, R-30, R-31A, R-31B, and R-31C)

1. Process Monitoring Channels R-11, R-12, R-15, R-16, R-17, R-18, R-20 and R-21 utilize a model DRM-200A (V16) microprocessor based ratemeter manufactured by NRC. The Ratemeter sends power to the detector and receives pulses back from the detector through a signal cable (reference Attachment 10.1 for Ratemeter Data Filtering Techniques). The rate of pulse inputs received by the ratemeter is proportional to the radiation level in the sample being monitored. The radiation level is indicated on the ratemeter digital display. The Ratemeter also processes the signal and provides analog outputs and contact closures for external indication and control functions. Additional features of the above rate-meters are (FIGURES 5 & 8):

   a. Two alarm circuits.
      - High-radiation alarm is indicated by the ALARM/RESET light (red light) being on. This is a latching circuit that is reset by pressing the ALARM/RESET pushbutton.
      - Circuit failure alarm (which occurs when no pulses are received from the detector input over a predetermined period of time) is indicated by the FAIL light (amber light) being on. This is a latching circuit that is reset by pressing the ALARM/RESET pushbutton.

   b. Pressing and holdings the ALARM/RESET pushbutton will display the Setpoint on the Ratemeter digital display and reset the HIGH and FAIL Alarms.

   c. Pressing and holding the CHECK SOURCE pushbutton (white light) will actuate a solenoid-operated radiation check source that is located at the detector. An upscale reading will indicates the Check Source circuit and the detector circuit are operating properly.

   d. Latching the H.V. OFF pushbutton (white light) will disconnect the detector high voltage. As soon as the switch is pressed the ALARM/RESET lamp and RTGB will annunciate; and any auto functions will activate. After approximately 3 minutes, the FAIL light will be activated. Unlatching the H.V. OFF pushbutton will restore the detector H.V., reset the ALARM/RESET light, and reset auto function. The ALARM/RESET button must be pushed to clear the FAIL light.

   e. Pressing and holding the CKT TEST pushbutton (white light) will perform a function check of the ratemeter. During this test the

INFORMATION ONLY

Question: 40

Given the following conditions:

- The plant is operating at 100% power.
- PZR level is 54% and increasing.
- RCS pressure is 2160 psig and decreasing.
- APP-003-B3, PRT HI TEMP, is in alarm.
- APP-003-C3, PRT HI PRESS, is in alarm.
- APP-003-D3, PRT HI/LO LVL, is in alarm.
- APP-003-E6, PZR PORV LN HI TEMP, is in alarm.
- APP-003-F6, PZR SAFETY VLV LINE HI TEMP, is in alarm.
- APP-003-D6, PZR PORV/SAFETY VALVE OPEN, is in alarm.

Which ONE (1) of the following describes the immediate action(s) to be taken?

a. Verify CLOSED both PZR PORV(s)

b. CLOSE CVC-303A,B, and C, RCP 'A', 'B', and 'C' SEAL LEAKOFF valves

c. CLOSE CVC-381, SEAL WTR RTRN ISO valve

d. Trip the reactor and follow PATH-1

Answer:

a. Verify CLOSED both PZR PORV(s)

QUESTION NUMBER: 40
TIER/GROUP: 1/2

K/A: 008AA1.01
Ability to operate and / or monitor the following as they apply to the Pressurizer Vapor Space Accident: PZR spray block valve and PORV block valve

K/A IMPORTANCE: RO 4.2

10CFR55 CONTENT: 55.41(b) RO 3

OBJECTIVE: AOP-019-05
State the immediate action steps of AOP-019.

REFERENCES: AOP-019

SOURCE: New Significantly Modified Modified/Direct **X**

Bank Number AOP-019-05 003

JUSTIFICATION:

a. **CORRECT** With RCS pressure below the PORV setpoint and continuing to lower, and with indications of discharge to the PRT, the PORVs should be closed.

b. Plausible since closing these valves would isolate any possible leakage passed relief valve to PRT. Indications do not support that relief valve has lifted.

c. Plausible if candidate determines that closing this valve would isolate any possible leakage passed relief valve to PRT. Indications do not support that relief valve has lifted and this would cause relief valve to lift.

d. Plausible since a continued drop in pressure may necessitate this action. Immediate concern is preventing further loss of inventory from RCS which will cause a trip to not be required.

DIFFICULTY:
Comprehensive/Analysis **X** Memory Rating 3

Analysis of numerous alarms and indications to diagnose event and determine corrective actions.

REFERENCES SUPPLIED: NONE

PSA RELATED

STEP	INSTRUCTIONS	RESPONSE NOT OBTAINED
	NOTE Steps 1 and 2 are Immediate Action steps.	
* 1.	Determine If PZR PORVs Should Be Closed:	
	a. Check PZR pressure - LESS THAN 2335 PSIG	a. Verify OPEN at least one PZR PORV and associated PORV BLOCK Valve: • PCV-455C AND RC-536 OR • PCV-456 AND RC-535 WHEN RCS pressure is less than 2335 psig, THEN perform Step 1.b. Go To Step 2.
	b. Verify Both PZR PORVs - CLOSED	b. IF any PZR PORV can NOT be closed, THEN close its PORV BLOCK Valve.
2.	Control The PZR SPRAY VALVES AND PZR Heaters To Restore RCS Pressure To The Desired Control Band	
* 3.	Check PZR Pressure - UNDER OPERATOR CONTROL	IF PZR Pressure approaches a Reactor Trip Setpoint, THEN trip the Reactor and Go To Path-1. • Low PZR Pressure - 1844 psig • High PZR Pressure - 2376 psig • OTΔT - Variable (TR-412)

Question: 40

Given the following conditions:

- The plant is operating at 100% power.
- PZR level is 54% and increasing.
- RCS pressure is 2260 psig and decreasing.
- APP-003-B3, PRT HI TEMP, is in alarm.
- APP-003-C3, PRT HI PRESS, is in alarm.
- APP-003-D3, PRT HI/LO LVL, is in alarm.
- APP-003-E6, PZR PORV LN HI TEMP, is in alarm.
- APP-003-F6, PZR SAFETY VLV LINE HI TEMP, is in alarm.

Which ONE (1) of the following describes the immediate action(s) to be taken?

a. Manually close the PZR PORV(s)

b. Drain the PZR relief tank level to 70%

c. Verify OPEN at least one PZR PORV and associated BLOCK Valve

d. Trip the reactor and follow PATH-1

Answer:

a. Manually close the PZR PORV(s)

QUESTION NUMBER: 40
TIER/GROUP: 1/2

K/A: 008AA1.01
Ability to operate and / or monitor the following as they apply to the Pressurizer Vapor Space Accident: PZR spray block valve and PORV block valve

K/A IMPORTANCE: RO 4.2

10CFR55 CONTENT: 55.41(b) RO 3

OBJECTIVE: AOP-019-05
State the immediate action steps of AOP-019.

REFERENCES: AOP-019

SOURCE: New Significantly Modified Modified/Direct **X**

Bank Number AOP-019-05 003

JUSTIFICATION:

a. **CORRECT** With RCS pressure below the PORV setpoint and continuing to lower, and with indications of discharge to the PRT, the PORVs should be closed.

b. Plausible since PRT level is high and will eventually requiring draining. Immediate concern is preventing further loss of inventory from RCS.

?

c. Plausible since PORV and block valves are normally required to be open, or a TS action must be entered. Immediate concern is preventing further loss of inventory from RCS.

d. Plausible since a continued drop in pressure may necessitate this action. Immediate concern is preventing further loss of inventory from RCS which will cause a trip to not be required.

DIFFICULTY:
Comprehensive/Analysis **X** Memory Rating 3

Analysis of numerous alarms and indications to diagnose event and determine corrective actions.

REFERENCES SUPPLIED: NONE

PSA RELATED

Question: 41

Given the following conditions:

- Pressurizer Heater Control Group is ON.
- Pressurizer Heater Backup Group 'A' is in AUTO.
- Pressurizer Heater Backup Group 'B' is in AUTO.
- Pressurizer Level transmitter LT-459 fails LOW.

Assuming **NO** operator actions, which ONE (1) of the following describes the status of the Pressurizer Heaters?

	Control Group	**Backup Group 'A'**	**Backup Group 'B'**
a.	ON	OFF	ON
b.	ON	OFF	OFF
c.	OFF	ON	OFF
d.	OFF	OFF	OFF

Answer:

d.	OFF	OFF	OFF

QUESTION NUMBER: 41
TIER/GROUP: 2/2

K/A: 010K4.02
Knowledge of PZR PCS design feature(s) and/or interlock(s) which provide for the following:
Prevention of uncovering PZR heaters

K/A IMPORTANCE: RO 3.0

10CFR55 CONTENT: 55.41(b) RO 7

OBJECTIVE: AOP-025-03
Demonstrate an understanding of selected steps, cautions, and notes in AOP-025 by explaining the basis of each.

REFERENCES: SD-059

SOURCE: New Significantly Modified **X** Modified/Direct

Bank Number CVCS-05 007

JUSTIFICATION:

a. Plausible since there are two channels which input the low level cutoff and two groups of backup heaters. Either channel failure causes all heaters to deenergize.

b. Plausible since there are control heaters and backup heaters and two channels of low level cutoff. Either channel failure causes all heaters to deenergize.

c. Plausible since there are two channels which input the low level cutoff and two groups of backup heaters. Either channel failure causes all heaters to deenergize.

d. **CORRECT** Low failure of either LT-459 or LT-460 causes all heaters to deenergize.

DIFFICULTY:
Comprehensive/Analysis Memory **X** Rating ~~3~~ 2

Knowledge of low level heater cutoff on failed channel input.

REFERENCES SUPPLIED: NONE

There is one alarm associated with each channel of LTOP. It actuates for 3 reasons: (1) RCS temperature is <360°F and LTOP is not selected on the key switch for OVERPRESSURE PROTECTION, (2) The PORV has received and actuation signal based upon current pressure and temperature or (3) the associated Block valve is shut.

5.1.5 PZR Level Control (PZR-Figure 12)

PZR level is controlled by controlling charging pump speed. The level is programmed to ramp up as Tavg increases by LC-459G. This maintains approximately constant mass in the RCS as Tavg is increased and the coolant in the RCS expands. Level program is 22.2% at Tavg of 547°F and 53.3% at Tavg of 575.4°F.

There are 3 PZR level channels LT-459, LT-460 and LT-461. LC-459G the PZR level controller is normally fed by level channel LT-459 but can be replaced by LT-461 with a selector switch on the RTGB. The output of LC-459G is then fed to the charging pump speed controllers to control speed of the charging pump if their controllers are selected to Auto.

If PZR level increases 5% above program LC-459D will turn on the backup heaters and sound an annunciator for High Level Heaters on.

On PZR low level of 14.4%, proportional and backup heaters are deenergized and letdown is isolated by shutting LCV-460A & B if respective control switches are in auto. LC-459 and the LC-460, the low level bistables, are normally supplied by LT-459 and LT-460 respectively but either can be replaced by LT-461 with a selector switch on the RTGB.

LC-459 will only turn off the backup heaters that are selected to Automatic where LC-460 will turn off the backup heaters in Automatic or Manual. The only time this would have any bearing would be in the event of an instrument failure. If the channel feeding LC-459, usually LT-459, were to fail low the proportional heaters and any backup heaters in Automatic would deenergize and any backup heater in manual would remain energized.

INFORMATION USE ONLY

CVCS-05 007

Which ONE (1) of the following describes an operation of the Letdown Stop Valves LCV-460A and LCV-460B?

A. CLOSE on a Safety Injection signal if switch is in OPEN or AUTO.

B. CLOSE on a Safety Injection signal only if switch is in AUTO.

✓C. REOPEN when Pzr Low Level condition clears only if switch is in AUTO.

D. REOPEN when Pzr Low Level condition clears if switch is in OPEN or AUTO.

Question: 42

Given the following conditions:

- During a cooldown and depressurization, Pressurizer Pressure is at 1800 psig.
- All operator actions have been performed as directed by GP-007, "Plant Cooldown From Hot Shutdown to Cold Shutdown."

If PC-444J is operated in AUTO with the potentiometer set to 0.0 ...

a. heaters will energize, raising pressure until the PORVs open at approximately 2335 psig.

b. heaters will energize, raising pressure until the spray valves open at approximately 2260 psig.

c. sprays will open, decreasing pressure until a low pressure SI occurs at approximately 1715 psig.

d. sprays will open, decreasing pressure to approximately 1700 psig.

Answer:

d. sprays will open, decreasing pressure to approximately 1700 psig.

QUESTION NUMBER: 42
TIER/GROUP: 1/1

K/A: 027AK2.03
Knowledge of the interrelations between the Pressurizer Pressure Control Controllers and positioners

K/A IMPORTANCE: RO 2.6

10CFR55 CONTENT: 55.41(b) RO 7

OBJECTIVE: AOP-019-08
Given plant conditions, evaluate the appropriate actions to mitigate consequences related to pressure control as directed by steps in AOP-019.

REFERENCES: GP-007
SD-059

SOURCE: New Significantly Modified **X** Modified/Direct

Bank Number AOP-019-08 002

JUSTIFICATION:

a. Plausible if misconception about pressure controller output and demand and stated operating pressure for PORVs is accurate. Controller at 0.0 causes sprays to open, lowering pressure.

b. Plausible if misconception about pressure controller output and demand and stated operating pressure for sprays is accurate. Controller at 0.0 causes sprays to open, lowering pressure.

c. Plausible since this would occur if SI was not blocked as directed by procedure. SI would have been previously blocked.

d. **CORRECT** Range of controller is 1700 psig to 2500 psig. Placing controller at 0.0 in auto will cause pressure to lower to 1700 psig.

DIFFICULTY:
Comprehensive/Analysis **X** Memory Rating 3

Analysis of plant response to placing controller in an abnormal configuration.

REFERENCES SUPPLIED: NONE

NOTE: Adjusting PC-444J setpoint potentiometer to 0.0 will reduce RCS pressure to 1700 psig. PC-444J controller setpoint shall be adjusted SLOWLY to minimize the potential for causing a PZR insurge. An insurge could occur if PC-444J setpoint is adjusted too quickly.

The PZR cooldown rate shall be less than or equal to 200°F/hr. The PZR heatup rate shall be less than or equal to 100°F/hr. (TRMS 3.4)

The following is a continuous action step and shall be performed when conditions require.

3. **IF** PZR Surge line temperature decreases **AND** is not due to the normal temperature decrease associated with depressurization, **THEN** stop adjusting PC-444J setpoint until PZR Surge Line temperature is increasing. ____

4. Slowly adjust PC-444J, PZR PRESS 444J, controller setpoint potentiometer to 0.0 without exceeding 200°F/hr cooldown rate on the PZR **AND** continue with this procedure. ____

CAUTION

To prevent an SI Actuation, steam line pressure shall not be allowed to drop below 485 psig prior to blocking the HI STM LINE DP SI Signal.

The PZR PRESS/HI STM LINE DP SI Signal will automatically unblock if RCS pressure increases above 2000 psig. If this occurs, the signal should be blocked when RCS pressure decreases below 2000 psig.

8.2.16 **WHEN** RCS pressure is less than 2000 psig, **THEN** perform the following:

1. Display the following ERFIS points: (ACR 93-00023)

   - RCP0496D, LO PRESS SI BLOCK TRAIN "A" ____
   - RCP0497D, LO PRESS SI BLOCK TRAIN "B" ____

PRESSURE SETPOINTS

PZR-FIGURE-10 (Rev . 0)

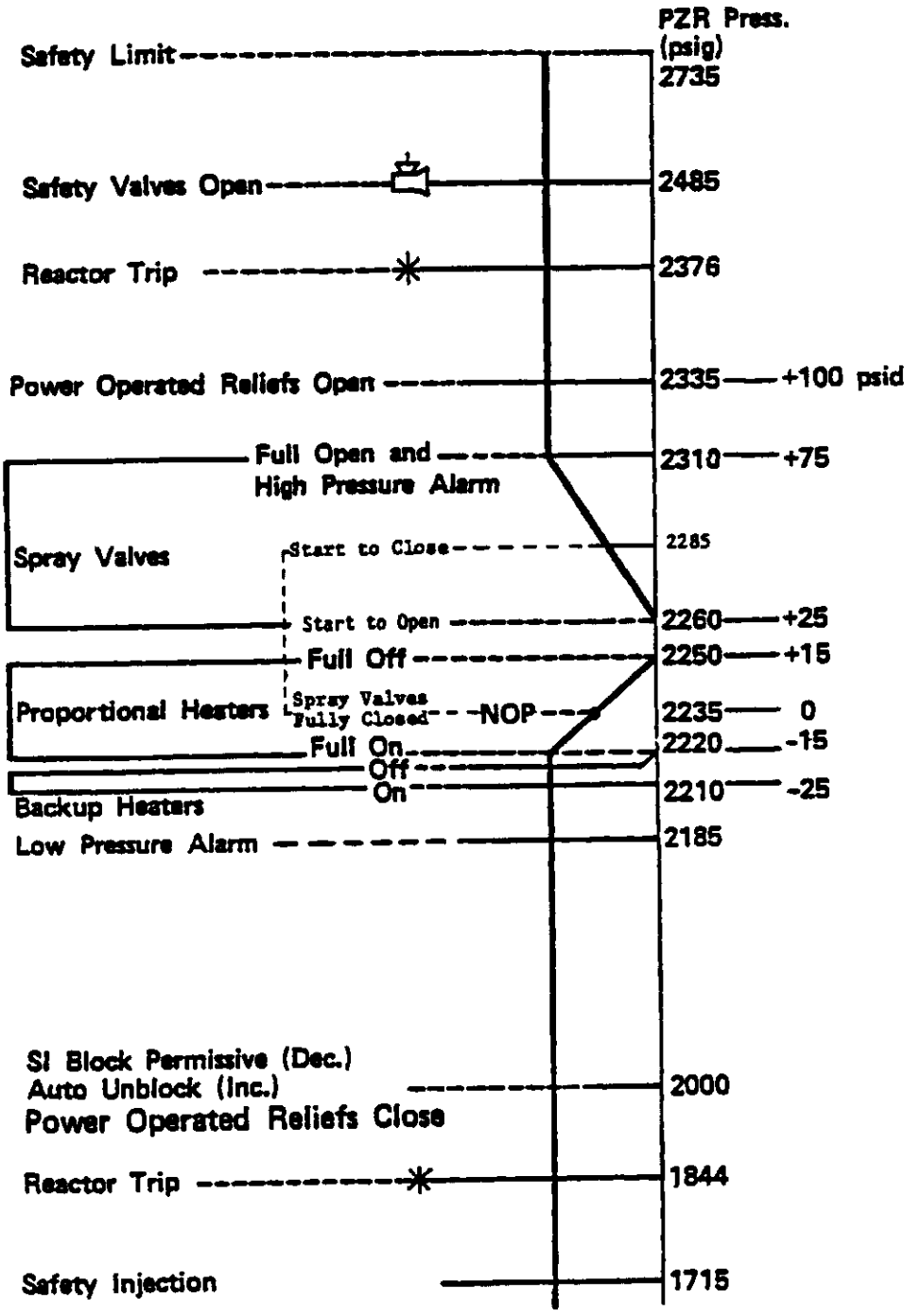

INFORMATION USE ONLY

AOP-019-08 002

The unit is at power and a transient occurred. RCS pressure is below normal, the crew has implemented AOP-019, Malfunction Of RCS Pressure Control. They are at the point in the procedure that asks if the master pressure controller PC-444J is operating properly in AUTO. What is the correct response for the master pressure controller PC-444J based on current plant conditions?

A. heaters off and sprays open

B. heaters off and sprays shut

C. heaters on and sprays open

✓D. heaters on and sprays shut

Question: 43

Given the following conditions:

- The plant is operating at 80% power when Instrument Bus 3 is de-energized.
- While investigating the failure, an electrician inadvertently causes a loss of Instrument Bus 4.
- A reactor trip occurs .

Assuming **NO** operator actions, which ONE (1) of the following describes the response of Safety Injection, Phase A, Phase B, and Containment Spray?

	SAFETY INJECTION SIGNAL	**PHASE A SIGNAL**	**PHASE B SIGNAL**	**CONTAINMENT SPRAY SIGNAL**
a.	**NOT** Actuated	**NOT** Actuated	**NOT** Actuated	**NOT** Actuated
b.	Actuated	Actuated	Actuated	Actuated
c.	Actuated	Actuated	Actuated	**NOT** Actuated
d.	Actuated	Actuated	**NOT** Actuated	**NOT** Actuated

Answer:

d.	Actuated	Actuated	**NOT** Actuated	**NOT** Actuated

QUESTION NUMBER: 43
TIER/GROUP: 2/1

K/A: 022K6.02
Knowledge of the effect of a loss or malfunction of the following will have on the CCS components: Sensors and detectors

K/A IMPORTANCE: RO 2.1

10CFR55 CONTENT: 55.41(b) RO 7

OBJECTIVE: ESF-14
Explain the effect on the ESFAS System due to selected failures.

REFERENCES: SD-006

SOURCE: New **X** Significantly Modified Modified/Direct

Bank Number NEW

JUSTIFICATION:

a. Plausible since a loss of IB 1 and IB 2 would prevent the sequencers from actuating even though the signals exist. SI and Phase A actuate in this failure.
b. Plausible since SI and Phase A will actuate. CS and Phase B will not actuate.
c. Plausible since SI and Phase A will actuate. Phase B will not actuate.
d. **CORRECT** Safety Injection actuates due to associated bistables going to tripped condition, resulting in a Phase A. CS and Phase B are only automatically actuated by high-high containment pressure. These bistables are energized to actuate.

DIFFICULTY:
Comprehensive/Analysis **X** Memory Rating 3

Comprehension of effect of loss of instrument power on ESF system.

REFERENCES SUPPLIED: NONE

SAFEGUARD ACTUATION SIGNALS

ESF-FIGURE-5 (Rev . 0)

SAFEGUARD ACTUATION SIGNALS

NOTES:

1. TWO MOMENTARY PUSHBUTTONS: PRESS EITHER ONE TO ACTUATE
2. TWO MOMENTARY PUSHBUTTONS: PRESS BOTH TO ACTUATE
3. ONE MOMENTARY PUSHBUTTON PER LOOP
4. CV PRESS BISTABLES ENERGIZE TO ACTUATE - ALL OTHERS DE-ENERGIZE TO ACTUATE
5. ENCLOSED CIRCUITRY NOT PART OF SAFEGUARDS SYSTEMS AND NOT REDUNDANT
6. COMPONENTS ACTUATED BY CV ISOLATION PHASE A & B AND BY CV VENTILATION ISOLATION ARE ALL INDIVIDUALLY SEALED IN SO THAT LOSS OF THE ACTUATION SIGNAL WILL NOT CAUSE COMPONENTS TO RETURN TO ORIGINAL POSITION.
7. PC-950, -951A, 951B FED BY THE EDG AUTOMATICALLY ON BLACKOUT
8. COMPONENTS ACTUATED BY SI SIGNAL ARE ALL INDIVIDUALLY SEALED IN SO THAT LOSS OF SI SIGNAL WILL NOT CAUSE COMPONENTS TO RETURN TO ORIGINAL POSITIONS.
9. COMPONENTS ACTUATED BY SI, PHASE A, AND CV VENTILATION ISOLATION SIGNALS ARE INDIVIDUALLY SEALED IN SO THAT LOSS OF THE ACTUATION SIGNAL WILL NOT CAUSE COMPONENTS TO RETURN TO THE POSITION PRIOR TO ACTUATION SIGNAL

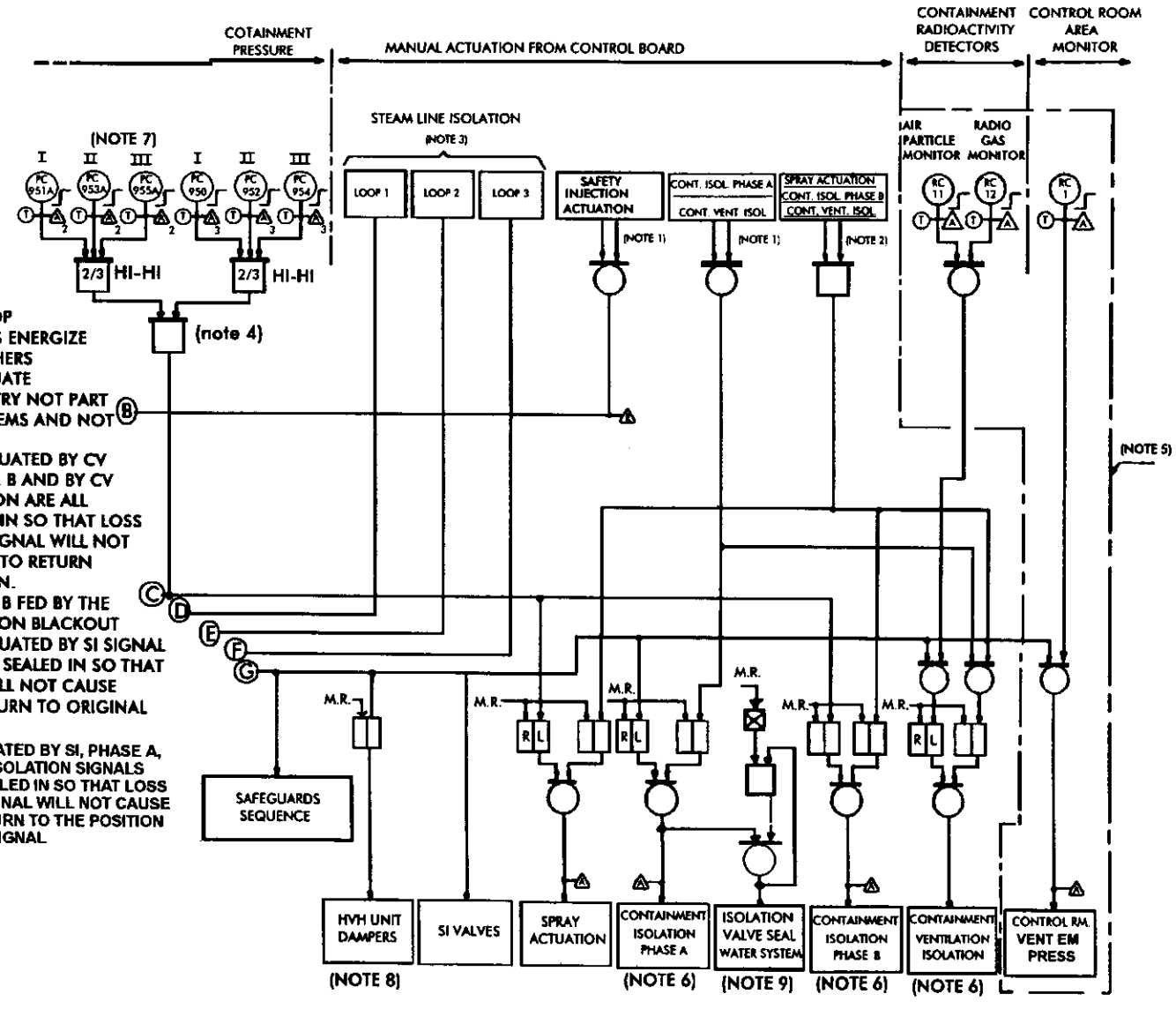

INFORMATION USE ONLY

Question: 44

Which ONE (1) of the following components, if Caution Tagged due to an abnormal condition, would require a Caution Cap be placed on the RTGB and a caution tag on the local control in accordance with OMM-001-9, "Equipment Tagging"?

a. RHR-752A, RHR PUMP "A" SUCTION

b. SI Pump "A"

c. SI-855, ACCUMULATOR NITROGEN SUPPLY

d. CCW Pump "A"

Answer:

d. CCW Pump "A"

QUESTION NUMBER: 44
TIER/GROUP: 3

K/A: 2.2.13
Knowledge of tagging and clearance procedures.

K/A IMPORTANCE: RO 3.6

10CFR55 CONTENT: 55.41(b) RO 10

OBJECTIVE: OMM-001-9-02
Explain the uses for caution tags IAW OMM-001-9.

REFERENCES: OMM-001-9

SOURCE: New Significantly Modified Modified/Direct **X**

Bank Number OMM-001-9-02 002

JUSTIFICATION:

a. Plausible since valve is controlled from the breaker only. No remote controls for valve.
b. Plausible since pump is controlled from RTGB. No local controls for pump.
c. Plausible since valve is controlled from RTGB. No local controls for valve.
d. **CORRECT** Components having RTGB controls require Caution Caps on switch and caution tag on local controls if they exist.

DIFFICULTY:
Comprehensive/Analysis Memory **X** Rating 3

Knowledge of tagging requirements to determine component requiring tagging.

REFERENCES SUPPLIED: NONE

8.2.1 (Continued)

CAUTION

There is a potential for boron dilution if a hydrostatic test boundary component were to leak, allowing dilution of the RCS. (SOER 94-2)

3. Caution Tags should be used for system hydrostatic tests. Each component, required to be in a specific position for the test, shall have a properly completed Caution Tag **OR** Cap attached.

4. Caution Tags should be used to identify instruments that are Out of Calibration. The Caution Tag should state: "This gauge has been found to be Out of Calibration. Readings from this gauge can only be used for trending purposes until it has been recalibrated".

5. If a Caution Tag is required for a component controlled from the RTGB, a Caution Cap should be placed on the control switch. If a local control also exists, a properly completed Caution Tag shall be attached.

6. If a condition exists such that component/system status indication is different from that expected for normal operation **AND** it is **NOT** practical to use a tag or cap, a Caution Dot should be used to identify the discrepancy. This does not include items which are covered by Clearance Information Tags (CITs) used in OPS-NGGC-1301.

7. A Caution Dot may be used to identify discrepancies in the interim when an abnormal system configuration is necessary, has been evaluated, **AND** normal operation cannot be restored, such as the following:

   - An annunciator locked in.
   - A component status light abnormal indication.
   - An indicator **OR** chart recorder displaying a parameter outside the normal/expected range.

QUESTION NUMBER: 44
TIER/GROUP: 3

K/A: 2.2.13
Knowledge of tagging and clearance procedures.

K/A IMPORTANCE: RO 3.6

10CFR55 CONTENT: 55.41(b) RO 10

OBJECTIVE: OMM-001-9-02
Explain the uses for caution tags IAW OMM-001-9.

REFERENCES: OMM-001-9

SOURCE: New Significantly Modified Modified/Direct **X**

Bank Number OMM-001-9-02 002

JUSTIFICATION:

a. Plausible since valve is controlled from the breaker only. No remote controls for valve.
b. Plausible since pump is controlled from RTGB. No local controls for pump.
c. Plausible since valve is controlled from RTGB. No local controls for valve.
d. **CORRECT** Components having RTGB controls require Caution Caps on switch and caution tag on local controls if they exist.

DIFFICULTY:
Comprehensive/Analysis Memory **X** Rating ~~2~~ 3

Knowledge of tagging requirements to determine component requiring tagging.

REFERENCES SUPPLIED: NONE

Question: 45

Given the following conditions:

- A reactor trip has occurred.
- PCV-1716, IA to Containment, has failed closed.

Pressurizer pressure is raised by using heaters and decreased by ...

a. normal spray.

b. PORVs.

c. auxiliary spray.

d. head vents.

Answer:

b. PORVs.

QUESTION NUMBER: 45
TIER/GROUP: 1/3

K/A: 056AA1.32
Ability to operate and / or monitor the following as they apply to the Loss of Offsite Power: PZR PORV hand switch

K/A IMPORTANCE: RO 3.4

10CFR55 CONTENT: 55.41(b) RO 3

OBJECTIVE: EPP-027-03
Demonstrate an understanding of selected steps, cautions, and notes in EPP-27 by explaining the basis of each.

REFERENCES: EPP-4
AOP-017
SD-059

SOURCE: New Significantly Modified **X** Modified/Direct

Bank Number EPP-027-03 002

JUSTIFICATION:

a. Plausible if thought that normal sprays have nitrogen backup system. Valves fail closed on loss of IA.

b. **CORRECT** With PCV-1716 failed closed, IA is isolated to containment. Components requiring instrument air inside containment (normal spray and aux spray) fail closed, so PORVs must be used since they are operated by nitrogen.

c. Plausible if thought that aux spray has nitrogen backup system. Valve fails closed on loss of IA.

d. Plausible since head vents can be aligned to PRT. Opening these valves would not result in desired result.

DIFFICULTY:
Comprehensive/Analysis **X** Memory Rating 3

Analysis of plant operational condition upon loss of air to containment.

REFERENCES SUPPLIED: NONE

STEP	INSTRUCTIONS	RESPONSE NOT OBTAINED
22.	Control PZR Pressure As Follows:	
	a. Check PZR pressure - LESS THAN 2235 PSIG **AND** DECREASING	a. Go To Step 22.f.
	b. Verify PZR PORVs - CLOSED	b. Close PORV BLOCK Valves.
	c. Verify PZR Spray Valves - CLOSED	c. Stop RCPs supplying failed Spray Valves. • RCP B supplies PCV-455A • RCP C supplies PCV-455B
	d. Verify PZR Heaters - ON	
	e. Go To Step 23	
	f. Check PZR pressure - GREATER THAN 2235 PSIG **AND** INCREASING	f. Go To Step 23.
	g. Verify PZR Heaters - OFF	
	h. Control PZR pressure using one of the following methods listed in order of preference:	
	1) Use normal PZR Spray	
	2) Establish auxiliary spray as follows:	2) Use one PZR PORV.
	a) Check PZR level - GREATER THAN 22%	
	b) Establish letdown using OP-301-1, Chemical and Volume Control System (CVCS)	
	c) Use auxiliary spray	

ATTACHMENT 1

MAJOR COMPONENTS AFFECTED BY LOSS OF IA

(Page 1 of 5)

1. Chemical and Volume Control System Components FAIL POSITION

   a. APP-003-F3, CHG PMP LO SPEED - ILLUMINATED (Loss of air to pressure switch downstream of I/P Convertor)

   b. CHARGING PUMP SPEED CONTROL - FULL SPEED

   c. CVC-200 A, B & C, LTDN ORIFICES - CLOSED

   d. CVC-204 A & B, LTDN LINE ISOs - CLOSED

   e. CVC-303 A, B & C, SEAL LEAKOFFS - OPEN

   f. CVC-307, PRI SEAL BYP ISO - CLOSED

   g. CVC-310A, LOOP 1 HOT LEG CHG - OPEN

   h. CVC-310B, LOOP 2 COLD LEG CHG - OPEN

   i. CVC-311, AUX PZR SPRAY - CLOSED

   j. CVC-387, EXCESS LTDN STOP - CLOSED

   k. CVC-389, EXCESS LTDN DIV - FAILS TO VCT

   l. CVCS HUT LEVEL CONTROLLERS - FORCED LOW

   m. FCV-113A, BA TO BLENDER - OPEN

   n. FCV-113B, BLENDED MU TO CHG SUCTION - CLOSED

   o. FCV-114A, PW TO BLENDER - CLOSED

   p. FCV-114B, BLENDED MU TO VCT - CLOSED

   q. HCV-105, BORIC ACID TK B RECIRC - CLOSED

   r. HCV-110, BORIC ACID TK A RECIRC - CLOSED

   s. HCV-121, CHARGING FLOW - OPEN

   t. HCV-137, EXCESS LTDN FLOW - CLOSED

   u. LCV-115A, VCT/HLDP TK DIV - FAILS TO VCT

(CONTINUED NEXT PAGE)

ATTACHMENT 1

MAJOR COMPONENTS AFFECTED BY LOSS OF IA

(Page 3 of 5)

7. Main Steam System Components FAIL POSITION

   a. MAIN STEAM ISOLATION VALVES - CLOSED

   b. STEAM LINE PORVs - CLOSED

8. Primary Sample System Components FAIL POSITION

   a. PS-956 A through H, PRIMARY SAMPLE ISOLATIONS - CLOSED

9. Radiation Monitoring System Components FAIL POSITION

   a. RMS-1,2,3 & 4, R-11/R-12 ISOL VALVES - CLOSED

10. Reactor Coolant System Components FAIL POSITION

    a. PCV-455 A & B, PZR SPRAYS - CLOSED

    b. RC-516 & 553, PRT TO GAS ANALYZER - CLOSED

    c. RC-519 A & B, PW TO CV ISOs - CLOSED

    d. RC-544, RV FLANGE LEAKOFF - OPEN

    e. RC-550, PRT NITROGEN SUPPLY - CLOSED

11. Residual Heat Removal System Components FAIL POSITION

    a. HCV-142, PURIFICATION FLOW - CLOSED

    b. HCV-758, RHR HX DISCH FLOW - CLOSED

    c. FCV-605, RHR HX BYPASS FLOW - CLOSED

the operator of an actuated safety valve or safety valve seat leakage. Acoustic monitors are also installed on each of the three safety valves. These monitors are located in the Cable Spreading Room where they provide local indication. Control Room indication and alarm is provided to warn the operators of an actuated safety valve or safety valve seat leakage.

3.5.2 PORVs (PCV-455C & 456) (PZR-Figure 4)

Number	2
Service	Open-Close air diaphragm
Relief capacity	179,000 #/hr per valve
Set Pressure	2335 psig
Fluid	Saturated Steam
Relief Line Design Temperature	470°F
Relief Line Design Pressure	500 psig
Relief Line Diameter	10 in.
Relief Line Pipe Schedule	40

The two PORVs PCV-455C, powered from 125VDC Aux. Panel "GC", and PCV-456, powered from 125VDC Aux. Panel "DC", have dual activating pressures. Whenever RCS temperature is above 350°F, the OVERPRESSURE PROTECTION switch is set for normal operation, and the valves will open at 2335 psig (except that PCV-455C is actuated by the variable output of a controller. That output is proportional to the error signal and reset, so that it may open at less than 2335 psig). During normal operation, the PORVs limit any pressure excursion and, thus, limit the operation of the spring-loaded PZR safety valves. Motor-operated Block Valves, RC-535 and RC-536, powered from 480V MCC-6, located ahead of the PORVs, are provided in order to isolate the PORVs from service should they fail to close, or leak excessively. The Block Valves may remain closed during normal operation to isolate a PORV experiencing excessive seat leakage.

Whenever the RCS temperature is below 350°F, and not vented to Containment, the OVERPRESSURE PROTECTION switch must be set for low pressure operation, and the valves will open at 400 psig. This provides Low Temperature Over pressure Protection (LTOPP) for the RCS when it is water-solid, that is, at temperatures that a steam bubble cannot be maintained in the PZR. The PORVs are pneumatic valves, with nitrogen being supplied by the Plant Nitrogen System. To assure proper operation of the LTOPP System, the Instrument Air System is valved in to serve as a backup for the Plant Nitrogen System whenever LTOPP is in service.

INFORMATION USE ONLY

EPP-027-03 002

Which ONE (1) of the following is the reason RCS pressure is controlled using the pressurizer PORV's while implementing EPP-27, Loss of DC Bus "B"?

A. Control power is lost to the pressurizer spray valves and they fail closed

✓B. Control power is lost to PCV-1716, Instrument Air to Containment, and it fails closed

C. Control power is lost to the PC-444J controller and spray valves can not be controlled from the RTGB

D. Control power is lost to the pressurizer spray valves and the auxiliary spray valves and they fail closed

Question: 45

Given the following conditions:

- A reactor trip has occurred.
- PCV-1716, IA to Containment, has failed closed.

Pressurizer pressure is raised by using heaters and decreased by ...

a. normal spray.

b. PORVs.

c. auxiliary spray.

d. ~~ambient losses.~~ not possible
level vents

Answer:

b. PORVs.

QUESTION NUMBER: 45
TIER/GROUP: 1/3

K/A: 056AA1.32
Ability to operate and / or monitor the following as they apply to the Loss of Offsite Power: PZR PORV hand switch

K/A IMPORTANCE: RO 3.4

10CFR55 CONTENT: 55.41(b) RO 3

OBJECTIVE: EPP-027-03
Demonstrate an understanding of selected steps, cautions, and notes in EPP-27 by explaining the basis of each.

REFERENCES: EPP-4
AOP-017
SD-059

SOURCE: New Significantly Modified **X** Modified/Direct

Bank Number EPP-027-03 002

JUSTIFICATION:

a. Plausible if thought that normal sprays have nitrogen backup system. Valves fail closed on loss of IA.

b. **CORRECT** With PCV-1716 failed closed, IA is isolated to containment. Components requiring instrument air inside containment (normal spray and aux spray) fail closed, so PORVs must be used since they are operated by nitrogen.

c. Plausible if thought that aux spray has nitrogen backup system. Valve fails closed on loss of IA.

d. Plausible if thought that all pressurizer valves are air operated. PORVs use nitrogen as operator.

DIFFICULTY:
Comprehensive/Analysis **X** Memory Rating 3

Analysis of plant operational condition upon loss of air to containment.

REFERENCES SUPPLIED: NONE

Question: 46

Which ONE (1) of the following supplies power to the majority of the Process Radiation Monitors?

a. Instrument Bus 1 & 6

b. Instrument Bus 2 & 7

c. Instrument Bus 3 & 8

d. Instrument Bus 4 & 9

must be a member of Lower P.S.

A NAUS process

Answer:

c. Instrument Bus 3 & 8

QUESTION NUMBER: 46
TIER/GROUP: 2/2

K/A: 073G2.1.24
Ability to obtain and interpret station electrical and mechanical drawings. (Process Rad Monitoring)

K/A IMPORTANCE: RO 2.8

10CFR55 CONTENT: 55.41(b) RO 11

OBJECTIVE: RM-06
List power supplies for the major RM System components as listed in the EDPs.

REFERENCES: EDP-008
OP-920
SD-019

SOURCE: New Significantly Modified Modified/Direct **X**

Bank Number RM-06 002

JUSTIFICATION:

a. Plausible since RMS is supplied by instrument buses. IB 7 supplies RMS rack 1 which are area rad monitors.

b. Plausible since RMS is supplied by instrument buses. IB 8 supplies RMS racks 2 and 3 which are vast majority of process radiation monitors.

c. **CORRECT** IB 8 supplies RMS Racks 2 and 3 which are the vast majority of the process radiation monitors.

d. Plausible since RMS is supplied by instrument buses. IB 9 supplies R-11 and R-12 only.

DIFFICULTY:
Comprehensive/Analysis **X** Memory Rating 2

Application and evaluation of procedural information to determine power supplies.

REFERENCES SUPPLIED: EDP-008, Sections 5-10

INSTRUMENT BUS NO. 8

Location: Safeguards Room, East Wall
Power Supply: Instrument Bus No. 3, Ckt 10
(fused panel)

CKT	FUSE SIZE	FUSE TYPE	LOAD
1			Emergency Response Facility Instrumentation System "MUX Cabinet 2" (CWD 1499)
2			RMS Console No. 1, 2, & 3 (NOTE 1) (CWD 83, 574)
3			Hagan Rack 8 (CWD 417)
4			Hagan Rack 14 (CWD 460)
5			Hagan Rack 15 (CWD 457)
6			Hagan Rack 16 (CWD 418)
7			Hagan Rack 17 (CWD 421)
8			Hagan Rack 18 (CWD 422)
9			RTGB receptacles, Sections A, C and D (CWD 114, 459, 479, 481, 963 , 964)
10			FT-110E/I Boric Acid Bypass Flow (CWD 474)
11			Pressurizer Spray Valve PCV-455B position lights (CWD 470)
12			TI-580, LI-802, PM-957, PI-8111-2 (CWD 533)
13	N/A	N/A	SPARE
14			FQ-958B CV Spray Flow (CWD 494B)
15	N/A	N/A	SPARE
16			V2 Safeguard relay (Rack 63) (CWD 397)
17	N/A	N/A	SPARE
18			Channel II CET/CCM Signal Processor Cabinet TM-578 (CWD 1700)
19	N/A	N/A	SPARE
20			FI-1425A, FI-1426B (AFW) (CWD 623A, 623B)
21	N/A	N/A	SPARE
22			Excore Neutron Flux Detector System Channel N-52 (CWD 450C)
23	N/A	N/A	SPARE
24	N/A	N/A	SPARE
25			Boric acid heat trace Local Annunciator No 3 (CWD180C)
26			Boric acid heat trace recorder No. 3 (CWD 180B)
27			CV Ave Temp Channel TI-950 (CWD 044)
28			Aux. panel "GB" TB 5 and 6 (turbine auto stop trip) (CWD 711)
29			Reactor Protection Rack 55 (CWD 438)
30			Reactor Protection Rack 60 (CWD 438)
31			Turbine oil temperature TT-2097 (CWD 726)
32			PQ 4005 Turbine main oil pump discharge (CWD 726)
33			Hydrogen control cabinet electronics (CWD-876)

NOTE 1: RMS console No. 1: R-32B and ERFIS Multiplexers for RMS
RMS console No. 2: R-11 & 12, R-14A-E digital displays, R-15, R-16, and the RMS recorder
RMS console No. 3: R-17, R-18, R-19A-C digital displays, R-20, R-21, R-30, R-31A-C.

PROCEDURE REFERENCE TABLE

INFORMATION USE

MONITOR NUMBER	SOURCE CHECKS	FUNCTIONAL TEST	SETPOINT	CALIB.	CHANNEL CHECKS
AREA RADIATION MONITORS					
R-1, R-2, R-3, R-4, R-5, R-6, R-7, & R-8	RST-001	OST-924-1	OMM-014	RST-008 CM-738	N/A
R-9 & R-33	RST-001	OST-924-1	OMM-014	RST-009 CM-738	N/A
R-32A & R-32B	RST-001	RST-001	OMM-014	RST-020 LP-256	OMM-001-12
PROCESS RADIATION MONITORS					
R-11	OST-905 RST-001	OST-924-2	OMM-014 EMP-022	EMP-024 RST-010 CM-738	OMM-001-12 EMP-024
R-12	EMP-022 RST-001	OST-924-2	OMM-014 EMP-022	EMP-024 RST-011 CM-738	OMM-001-12 EMP-024
R-14A & R-14B	EMP-013 EMP-024	EMP-013 EMP-024	EMP-024 EMP-028	RST-012 EMP-024	OMM-001-12 EMP-024
R-14C	EMP-013 EMP-024	EMP-013 EMP-024	EMP-022	RST-012 EMP-024	OMM-001-12 EMP-024
R-14D & R-14E	EMP-013 EMP-024	EMP-013 EMP-024	EMP-024 EMP-028	EMP-024 RST-012 PIC-024	OMM-001-12 EMP-024
R-15	RST-001	OST-924-2	OMM-014 EMP-028	EMP-024 RST-013 CM-738	OMM-001-12
R-16	RST-001	OST-924-2	OMM-014 EMP-028	EMP-024 RST-014 CM-738	OMM-001-12
R-17	RST-001	OST-924-2	OMM-014 EMP-028	EMP-024 RST-015 CM-738	N/A
R-18	EMP-023 RST-001	OST-924-2	OMM-014 EMP-023	EMP-024 RST-016 CM-738	OMM-001-12
R-19A, R-19B, & R-19C	EMP-023 EMP-024 EMP-027	MST-901	EMP-023	EMP-024 EMP-027 RST-017	OMM-001-12 EMP-024
R-20 & R-21	RST-001	OST-924-2	OMM-014 EMP-022 EMP-028	EMP-024 RST-011 CM-738	OMM-001-12
R-30, R-31A, R-31B, & R-31C	RST-001	OST-924-2	OMM-014	RST-009 CM-738	OMM-001-12
R-37	EMP-024 EMP-027 RST-001	MST-901	EMP-023	EMP-024 EMP-027 RST-017	OMM-001-12 EMP-024

motor. The system may be started manually or automatically by a signal from R-38. Upon actuation, the outside air damper opens, fan F-1 is started and air is rerouted from the normal air handling units through the emergency filtration unit back to the normal air handling unit. The filtered air drawn from the outside pressurizes the TSC/EOF relative to the outside atmosphere

d. A remote alarm panel is located in the EOF/TSC building, room 144.

3.3 Miscellaneous Equipment

3.3.1 RMS Consoles

Most RMS Control Room system equipment is centralized in three consoles (FIGURE 21). High reliability and ease of maintenance were emphasized in the design of this system. Removable channel drawers are used for rapid replacement of units, assemblies, and entire channels. It is possible to completely remove the various chassis from the cabinet, after disconnecting the cables from the rear of these units. Power supplies are as follows:

Instrument Bus 7: Supplies RMS Rack 1 (except R-32B) - Control Room will swap to Pressurization Mode if lost.

Instrument Bus 3&8: Supplies RMS Racks 2 and 3 and R-32B

Instrument Bus 9: R-11 & 12, CV Sample Valves, RMS 1-4 - Will close on loss of power

3.3.2 Recorders

1. R-1 through R-21, R-30 through R-33
A 32 point programmable recorder, with a scan rate of up to 20 points/second is located in RMS console number 2. This recorder is a Westronics Model 3000 recorder equipped with an audible alarm and is powered from Instrument Bus 8. It has been programmed to operate with eight (8) groups of points. Group No.1 consists of R-9, 11, 12, 14A, 14B, 14C, 15, 18, and point 99(must be used for printer to plot continuously). This group will plot continuously. It will plot in 8 different colors, but not in black or red. The other group assignments are as follows:

Group 2: R-1, 3, 4, 6, & 8

Group 3: R-2, 7, 32A, & 32B

INFORMATION ONLY

QUESTION NUMBER: 46
TIER/GROUP: 2/2

K/A: 073G2.1.24
Ability to obtain and interpret station electrical and mechanical drawings. (Process Rad Monitoring)

K/A IMPORTANCE: RO 2.8

10CFR55 CONTENT: 55.41(b) RO 11

OBJECTIVE: RM-06
List power supplies for the major RM System components as listed in the EDPs.

REFERENCES: EDP-008
OP-920
SD-019

SOURCE: New Significantly Modified Modified/Direct **X**

Bank Number RM-06 002

JUSTIFICATION:

a. Plausible since RMS is supplied by instrument buses. IB 7 supplies RMS rack 1 which are area rad monitors.

b. Plausible since RMS is supplied by instrument buses. IB 8 supplies RMS racks 2 and 3 which are vast majority of process radiation monitors.

c. **CORRECT** IB 8 supplies RMS Racks 2 and 3 which are the vast majority of the process radiation monitors.

d. Plausible since RMS is supplied by instrument buses. IB 9 supplies R-11 and R-12 only.

DIFFICULTY:
Comprehensive/Analysis **X** Memory Rating ~~3~~ 2

Application and evaluation of procedural information to determine power supplies.

REFERENCES SUPPLIED: EDP-008, Sections 5-~~10~~ 8.1

BM: 3/29/00

ok

Question: 47

Given the following conditions:

- The crew is performing AOP-016, "Excessive Plant Leakage."
- APP-001-A5, RV FLNG LEAKOFF HI TEMP, is in alarm.
- TI-401, Reactor Vessel Leak Off Temp, is rising.

An increase in level should be noted in the ...

a. Reactor Coolant Drain Tank (RCDT).

b. Volume Control Tank (VCT).

c. Containment Sump.

d. Pressurizer Relief Tank (PRT).

Answer:

a. Reactor Coolant Drain Tank (RCDT).

QUESTION NUMBER: 47
TIER/GROUP: 1/2

K/A: 009EA2.02
Ability to determine or interpret the following as they apply to a small break LOCA: Possible leak paths

K/A IMPORTANCE: RO 3.5

10CFR55 CONTENT: 55.41(b) RO 2

OBJECTIVE: AOP-016-03
Demonstrate an understanding of selected steps, cautions, and notes in AOP-016 by explaining the basis of each.

REFERENCES: AOP-016
APP-001
SD-058

SOURCE: New Significantly Modified **X** Modified/Direct

Bank Number AOP-016-04 006

JUSTIFICATION:

a. **CORRECT** Flange leakoff is normally aligned to the RCDT. Indication of leakoff, based on temperatures, is verified by checking RCDT level.

b. Plausible since VCT collects some reliefs and drains which are connected to RCS. Flange leakoff goes to RCDT.

c. Plausible since some leakoffs are directed to containment sump. RCDT collects flange leakoff.

d. Plausible since PRT collects RCS reliefs and leakoffs. RCDT collects flange leakoff.

DIFFICULTY:
Comprehensive/Analysis Memory **X** Rating 2

Knowledge of RV leakoff flowpath.

REFERENCES SUPPLIED: NONE

STEP	INSTRUCTIONS	RESPONSE NOT OBTAINED
77.	Evaluate The Following For Indication Of The Leakage Source: • APP-001-A5, RV FLNG LEAKOFF HI TEMP • TI-401, REACTOR VESSEL LEAK OFF TEMP • APP-001-C5, RCP STANDPIPE HI/LO LVL • CVC-389, EXCESS LTDN DIV, position	
78.	Check With SSO - CONTAINMENT ENTRY DESIRED	Go To Step 50.
79.	Make A Containment Entry To Evaluate For Leakage From The Following: a. DRAIN LINE ISOLATION ROOT VALVEs: • Loop 1 - RC-505A <u>AND</u> RC-505B • Loop 2 - RC-508A <u>AND</u> RC-508B • Loop 3 - RC-515A <u>AND</u> RC-515B b. WD-1711, REFUELING CANAL DRAIN TO RCDT	
80.	Go To Step 50	

- END -

RCS SYSTEM SIMPLIFIED DRAWING

RVINT-FIGURE-21 (Rev . 0)

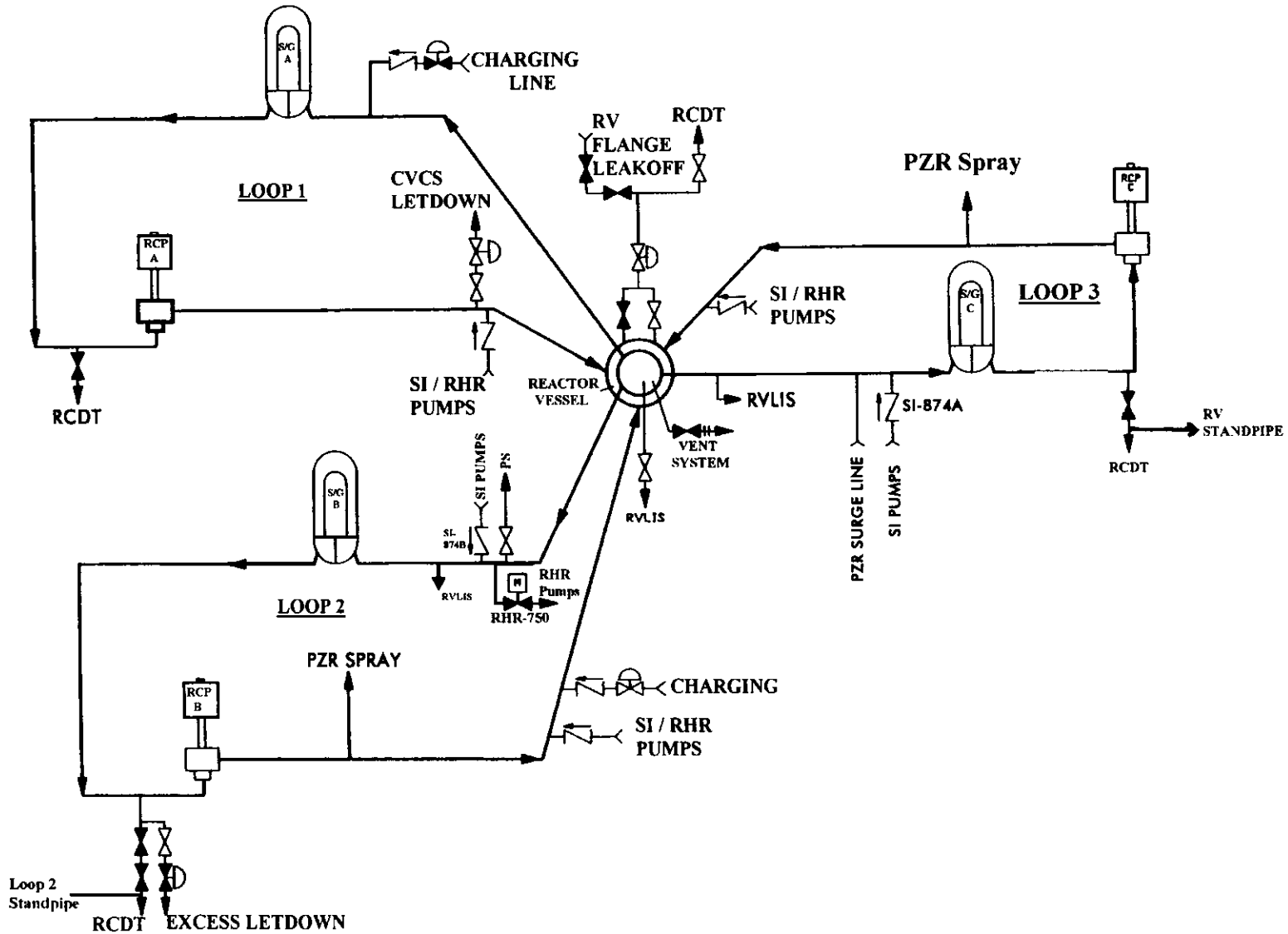

INFORMATION USE ONLY

ALARM

RV FLNG LEAKOFF HI TEMP

AUTOMATIC ACTIONS

1. None Applicable

CAUSE

1. Vessel Head Flange Seal leaking from Inner Chamber
2. High CV ambient temperature

OBSERVATIONS

1. Flange Leakoff Temperature (TI-401)
2. Containment Temperature (TI-950B)

ACTIONS

1. **IF** alarm is due to high CV ambient temperature, **THEN** no further actions are required.
2. Momentarily close RC-544, RV FLANGE LKOFF, **AND** check TI-401 to verify leak exists.
3. Dispatch an operator to check Reactor Coolant Drain Tank Level, LI-1003.
4. **IF** leakage is confirmed, **THEN** dispatch an operator to the CV to check for leakage in Outer Chamber as follows:
   1) Close RC-502, FLANGE INNER CHAMBER LEAK DETECTION ISOLATION.
   2) Open RC-501, FLANGE OUTER CHAMBER LEAK DETECTION ISOLATION.
   3) Check Flange Leakoff Temperature **AND** RCDT level for continued leakage.
5. **IF** RCS temperature and pressure can be maintained stable, **THEN** perform OST-051.
6. **IF** excessive RCS leakage exists, **THEN** refer to AOP-016.

DEVICE/SETPOINTS

1. TC-401 / 124°F (20°F above ambient)

POSSIBLE PLANT EFFECTS

1. Excessive RCS leakage

REFERENCES

1. ITS LCO 3.4.13
2. AOP-016, Excessive Primary Plant Leakage
3. OST-051, Reactor Coolant System Leakage Evaluation
4. CWD B-190628, Sheet 462, Cable X

AOP-016-04 006

Which ONE (1) of the following request for outside assistance is the crew directed to request when attempting to locate the source of excessive RCS leakage while using AOP-016, "Excessive Plant Leakage"?

✓A. When checking for SG tube leakage, request secondary chemistry samples to indicate primary to secondary leakage.

B. When checking for leakage into CCW, request chemistry samples to indicate primary to CCW leakage.

C. When checking for leakage into SI Accumulators, request AO to check temperature of accumulator piping.

D. When checking for leakage into the PRT, request AO locally monitor level, temperature, pressure, and pumping frequency.

Question: 48

Given the following conditions:

- An accident has occurred which has caused Containment pressure to increase to 6.5 psig.
- Containment pressure has been decreased to 1.6 psig.
- Containment radiation levels are currently 75 R/hour and rising slowly.
- A step in the recovery procedure states:

  "Control PZR Level between 22% [40%] and 72% [68%]."

Which ONE (1) of the following identifies the **MINIMUM** and **MAXIMUM** indicated pressurizer levels that are to be maintained **AND** the Containment parameter that this decision is based upon?

	MINIMUM	**MAXIMUM**	**CONTAINMENT PARAMETER**
a.	22%	72%	Pressure
b.	22%	72%	Radiation
c.	40%	68%	Pressure
d.	40%	68%	Radiation

Answer:

c.	40%	68%	Pressure

QUESTION NUMBER: 48
TIER/GROUP: 2/2

K/A: 011K6.05
Knowledge of the effect of a loss or malfunction on the function of PZR level gauges as postaccident monitors

K/A IMPORTANCE: RO 3.1

10CFR55 CONTENT: 55.41(b) RO 9

OBJECTIVE: OMM-022-03
Demonstrate an understanding of selected steps, cautions, and notes in OMM-022 by explaining the basis of each.

REFERENCES: OMM-022

SOURCE: New **X** Significantly Modified Modified/Direct

Bank Number NEW

JUSTIFICATION:

a. Plausible since these are given values for low and high level control points. Adverse values (bracketed values) must be used.

b. Plausible since these are given values for low and high level control points. Adverse values (bracketed values) must be used.

c. **CORRECT** Once CV pressure exceeds 4 psig, adverse values shall be used even when adverse containment conditions no longer exist. Based on containment pressure conditions, not radiation levels.

d. Plausible since once CV pressure exceeds 4 psig, adverse values shall be used even when adverse containment conditions no longer exist. Based on containment pressure conditions, not radiation levels, although transmitters can be adversely affected by high radiation levels.

DIFFICULTY:
Comprehensive/Analysis **X** Memory Rating 3

Comprehension and application of adverse containment condition requirements.

REFERENCES SUPPLIED: NONE

GLOSSARY

1.1 Definitions

1.1.1 **Adverse Containment Conditions** - If the CV pressure is greater than or equal to 4 psig, then adverse containment conditions exist. When adverse setpoints are provided, they will be enclosed by brackets: [ ].

1.1.2 **Core Cooling Mode** - When referenced for the current status of the RHR System, the system is aligned to remove decay heat via the normal pathway from RCS loop "B" hot leg back through RHR to the loop cold legs.

1.1.3 **Diverse** - (In reference to an indication) Having multiple indications of different types for indication of the same parameter. An example of diverse indications for the same parameter would be the use of S/G level increase, as well as AFW Line Flow Indication to verify that AFW Flow exists.

1.1.4 **Go To** - An action verb requiring the operator to leave the procedure or step currently in effect and implement the referenced procedure or step. The operator does not return to the EOP or AOP unless explicitly directed to by the procedure transitioned to.

1.1.5 **Injection Mode** - When referenced for the current status of the RHR System, the system is aligned to take a suction on the RWST and discharge to the loops. (Normal at-power RHR line up)

1.1.6 **Normal** - Describes a condition in which the parameter under consideration is within a range that can be expected during routine plant operation or is being controlled in accordance with approved plant procedures. When making this determination previous trends should be used. (RAIL 94R0296)

1.1.7 **Nuclear Safety Concern** - A condition is said to have a Nuclear Safety Concern when that condition has the possibility of jeopardizing the health and/or safety of the public to the extent that the SSO determines that action is needed to mitigate the condition.

1.1.8 **Perform** - An action verb directing the operator to accomplish certain actions using the referenced procedure and implicitly requiring the operator to remain in the procedure in effect. This action may be reinforced by the statement, "while continuing with this procedure".

8.3.10 Incorrect EOP Transition

1. Should the Operator determine that he is in an incorrect Path or EPP, he has two options:

   - If the incorrect transition is immediately recognizable **AND** no alterations of the WOG mitigative strategy have occurred, he may move back to the point in the Network where the incorrect transition has occurred.

   - If the incorrect transition is not immediately recognizable **OR** alterations in the mitigative strategy have occurred, the Operator should move to Path-1, Entry Point A, and start over.

2. During the rediagnosis described above, complete reactuation of the Engineered Safety Features is allowed, but not required. Reactuation of necessary safety features during rediagnosis is guided by the requirements of the applicable Foldout and Operator judgement based on the symptoms present.

8.3.11 Adverse Containment Conditions Usage

1. When adverse containment conditions develop, the use of adverse containment condition setpoints shall be initiated.

2. The use of adverse containment condition setpoints shall be maintained from that point forward, even when adverse containment conditions no longer exist.

3. An adverse containment condition setpoint may or may not be provided. The operator shall use a setpoint with no brackets if no setpoint within brackets is provided, even if adverse containment conditions exist.

8.3.12 Special EPP Priority

1. Certain contingency EPPs take precedence over FRPs because of their treatment of specific initiating events. In all such cases, this precedence is identified in a CAUTION or NOTE at the beginning of the EPP.

Question: 48

Given the following conditions:

- An accident has occurred which has caused Containment pressure to increase to 6.5 psig.
- Containment pressure has been decreased to 1.6 psig.
- A step in the recovery procedure states:

  "Control PZR Level between 22% [40%] and 72% [68%]."

Which ONE (1) of the following identifies the **MINIMUM** and **MAXIMUM** indicated pressurizer levels that are to be maintained?

	MINIMUM	**MAXIMUM**
a.	22%	68%
b.	22%	72%
c.	40%	68%
d.	40%	72%

Answer:

c.	40%	68%

QUESTION NUMBER: 48
TIER/GROUP: 2/2

K/A: 011K6.05
Knowledge of the effect of a loss or malfunction on the function of PZR level gauges as postaccident monitors

K/A IMPORTANCE: RO 3.1

10CFR55 CONTENT: 55.41(b) RO 9

OBJECTIVE: OMM-022-03
Demonstrate an understanding of selected steps, cautions, and notes in OMM-022 by explaining the basis of each.

REFERENCES: OMM-022

SOURCE: New **X** Significantly Modified Modified/Direct

Bank Number NEW

JUSTIFICATION:

a. Plausible since these are given values for low and high level control points. Adverse values (bracketed values) must be used.

b. Plausible since these are given values for low and high level control points. Adverse values (bracketed values) must be used.

c. **CORRECT** Once CV pressure exceeds 4 psig, adverse values shall be used even when adverse containment conditions no longer exist.

d. Plausible since these are given values for low and high level control points. Adverse values (bracketed values) must be used.

DIFFICULTY:
Comprehensive/Analysis **X** Memory Rating 3

Comprehension and application of adverse containment condition requirements.

REFERENCES SUPPLIED: NONE

Question: 49

Given the following conditions:

- The Reactor has just been taken critical following a trip at EOL.
- Power is currently 10^{-8} amps.
- The flange gasket on S/G 'A' PORV has failed.

Which ONE (1) of the following describes the response of RCS temperature and Reactor Power to this event?

	RCS TEMPERATURE	**REACTOR POWER**
a.	Decreases	Increases
b.	Decreases	**NO** Change
c.	Increases	Increases
d.	Increases	**NO** Change

Answer:

a.	Decreases	Increases

QUESTION NUMBER: 49
TIER/GROUP: 1/1

K/A: 040G2.2.1
Ability to perform pre-startup procedures for the facility, including operating those controls associated with plant equipment that could affect reactivity. (Steam Line Rupture)

K/A IMPORTANCE: RO 3.7

10CFR55 CONTENT: 55.41(b) RO 5

OBJECTIVE: MCD-01-03
Describe changes in core conditions that change core reactivity, including: boron concentration, control rod position, Fission-product poisons, fuel temperature and moderator temperature

REFERENCES: FSAR 15.1.3

SOURCE: New Significantly Modified **X** Modified/Direct

Bank Number MCD-99 004

JUSTIFICATION:

a. **CORRECT** Steaming will cause RCS temperature to lower. When temperature is lowered, positive reactivity is added causing power to rise.

b. Plausible since RCS temperature decreases in response to this event. Power would rise even being initially below the POAH.

c. Plausible since adding positive reactivity above the POAH would cause temperature and power to rise initially. Positive reactivity is added in this case by lowering temperature.

d. Plausible since adding causing temperature to rise above the POAH would cause power to lower. Unit is below the POAH.

DIFFICULTY:
Comprehensive/Analysis **X** Memory Rating 3

Analysis of reactivity changes in core below the POAH.

REFERENCES SUPPLIED: NONE

15.1.3 Increase in Steam Flow (Excess Load)

15.1.3.1 Identification of Causes and Event Description

The increase in steam flow event is initiated by an increase in steam demand. The increased steam demand may be initiated by the operator, system demand, or regulating valve malfunction. The step increase in steam flow used bounds the maximum capacity of the turbine steam regulating valves.

The event initiator is a step increase in steam flow. The feedwater regulating valves open to increase the feedwater flow to match the new steam demand and maintain steam generator water level. In response to the increased steam flow, the secondary system pressure decreases, resulting in an increase in the primary-to-secondary heat transfer rate. The primary side steam generator outlet temperature decreases due to the enhanced heat removal. As a consequence, the primary system core average temperature decreases and the primary system fluid contracts, resulting in an outsurge of fluid from the pressurizer. The pressurizer level and pressure decrease as fluid is expelled from the pressurizer.

The effect of this cooldown on the core power level will depend upon the sign of the moderator temperature coefficient and the state of the Rod Control System. If automatic control rod withdrawal is blocked[a], negative moderator feedback will increase the core power as the coolant temperature decreases, and the reactor system will reach a new steady-state condition at a power level which is consistent with the increased heat removal rate. (Positive moderator feedback, on the other hand, would decrease the core power level and not challenge the acceptance criterion.)

This event is classified as a Condition II event (Table 15.0.1-1). The relevant acceptance criteria are described in 15.0.1.1. As cited in Table 15.0.11-1, no single failure in the ESF will affect the analysis for this event.

15.1.3.2 Analysis Method

The analysis was performed using the ANF-RELAP and XCOBRA-IIIC codes. The ANF-RELAP code (Reference 15.0-3) was used to model the salient system components and calculate neutron power, fuel thermal response, surface heat transport, and fluid conditions (such as coolant flow rates, temperatures, and pressures) and produce an approximate DNBR calculation to estimate the time at which the DNBR was a minimum. The core fluid boundary conditions and average rod surface heat flux at this time were then used as input to the XCOBRA-IIIC code (Reference 15.0-4), which was used to more precisely evaluate the MDNBR value for the analysis.

15.1.3.3 Definition of Events Analyzed and Bounding Input

This event is predominantly a depressurization event, so the primary concern for this event is the challenge to the specified acceptable fuel design limits (SAFDLs). Therefore, the cases identified for analysis for this event are selected on the basis of bounding the largest challenge to the SAFDLs.

---

[a] Automatic control rod withdrawal was not considered in the analysis.

MCD-99 004

Given the following plant conditions:

- S/G level is decreasing
- Steam Flow is increasing
- Containment pressure is increasing
- Steam Generator pressure is decreasing
- Feed Flow is increasing

Which one (1) of the following transients explains the above conditions?

✓A. Small steam break inside containment

B. Small feed break inside containment

C. Steam Generator Tube Rupture

D. LOCA inside containment

Question: 49

Given the following conditions:

- The Reactor has just been taken critical following a trip at EOL.
- Power is currently 10^{-8} amps.
- A small steam leak occurs on S/G 'A' outside containment.

Which ONE (1) of the following describes the response of RCS temperature and Reactor Power to this event?

	RCS TEMPERATURE	REACTOR POWER
a.	Decreases	Increases
b.	Decreases	Decreases
c.	Increases	Increases
d.	Increases	Decreases

Answer:

a.	Decreases	Increases

QUESTION NUMBER: 49
TIER/GROUP: 1/1

K/A: 040G2.2.1
Ability to perform pre-startup procedures for the facility, including operating those controls associated with plant equipment that could affect reactivity. (Steam Line Rupture)

K/A IMPORTANCE: RO 3.7

10CFR55 CONTENT: 55.41(b) RO 5

OBJECTIVE: MCD-01-03
Describe changes in core conditions that change core reactivity, including: boron concentration, control rod position, Fission-product poisons, fuel temperature and moderator temperature

REFERENCES: FSAR 15.1.3

SOURCE: New Significantly Modified **X** Modified/Direct

Bank Number MCD-99 004

JUSTIFICATION:

a. **CORRECT** Steaming will cause RCS temperature to lower. When temperature is lowered, positive reactivity is added causing power to rise.

b. Plausible since a positive moderator temperature coefficient will cause power to lower. At EOL moderator temperature coefficient is negative.

c. Plausible since adding positive reactivity above the POAH would cause temperature and power to rise initially. Positive reactivity is added in this case by lowering temperature.

d. Plausible since adding causing temperature to rise above the POAH would cause power to lower. Unit is below the POAH.

DIFFICULTY:
Comprehensive/Analysis **X** Memory Rating 3

Analysis of reactivity changes in core below the POAH.

REFERENCES SUPPLIED: NONE

Question: 50

AOP-022, "Loss of Service Water," provides actions to respond to SW pipe ruptures in all of the following locations **EXCEPT** the ...

a. Auxiliary Building.

b. Turbine Building.

c. Intake Area.

d. Containment.

Answer:

d. Containment.

QUESTION NUMBER: 50
TIER/GROUP: 2/1

K/A: 022A2.05
Ability to (a) predict the impacts of the following malfunctions or operations on the CCS; and (b) based on those predictions, use procedures to correct, control, or mitigate the consequences of those malfunctions or operations: Major leak in CCS

K/A IMPORTANCE: RO 3.1

10CFR55 CONTENT: 55.41(b) RO 10

OBJECTIVE: AOP-022-01
State the purpose of AOP-022.

REFERENCES: APP-002
AOP-022

SOURCE: New Significantly Modified **X** Modified/Direct

Bank Number AOP-022-01 002

JUSTIFICATION:

a. Plausible since all given locations are provided with service water. AOP-022 does not provide guidance for a break within the boundaries of the containment coolers.

b. Plausible since all given locations are provided with service water. AOP-022 does not provide guidance for a break within the boundaries of the containment coolers.

c. Plausible since all given locations are provided with service water. AOP-022 does not provide guidance for a break within the boundaries of the containment coolers.

d. **CORRECT** AOP-022 provides guidance for SW breaks in the intake structure, turbine building, and auxiliary building.

DIFFICULTY:
Comprehensive/Analysis Memory **X** Rating 2

Knowledge of purpose of abnormal operating procedure.

REFERENCES SUPPLIED: NONE

PSA RELATED

ALARM

HVH-1 WTR OUTLET LO FLOW

AUTOMATIC ACTIONS

1. None Applicable

CAUSE

1. Operating Service Water Booster Pump Tripped
2. V6-33A, SW BOOSTER PUMP "A" SUPPLY TO HVH-1, closed **OR** other service water valves misaligned.
3. Standby Service Water Booster Pump Check Valve Stuck Open.
4. Service Water System Leak.

OBSERVATIONS

1. Service Water Booster Pump Status Lights on RTGB.
2. V6-33A, SW BOOSTER PUMP "A" SUPPLY TO HVH-1, position indication.
3. Service Water Header Pressure, PI-1616 (North) **AND** PI-1684 (South).

ACTIONS

1. **IF** the operating Service Water Booster Pump has tripped, **THEN** start Standby Service Water Booster Pump.
2. **IF** V6-33A has closed, **THEN** verify Open V6-33A.
3. **IF** a Service Water rupture outside of the HVH boundaries is indicated, **THEN** refer to AOP-022.
4. **IF** required, **THEN** dispatch personnel to check local indications:
   - HVH-1 Outlet Flow, FI-1698A
   - HVH-1 Outlet Pressure, PI-1646A
   - Standby Service Water Booster Pump rotation
5. **IF** standby Service Water Booster Pump check valve is stuck open, **THEN** perform the following:
   a. Close the associated discharge valve:
      - SW-32 for A pump
      - SW-33 for B pump
   b. **IF** the discharge valve has been closed, **THEN** open the associated SWBP breaker:
      - SWBP A - MCC-16 (CMPT 3M)
      - SWBP B - MCC-18 (CMPT 3M)
   c. Refer to ITS 3.6.6 **AND** 3.7.7.

Purpose and Entry Conditions

(Page 1 of 1)

1. PURPOSE

This procedure provides instructions in the event of a break of either the North or South Service Water Headers upstream OR downstream of check valves SW-541 or SW-545 or flooding in the Intake Area Service Water Pits.

2. ENTRY CONDITIONS

This procedure is entered whenever there is an indication that a break of a Service Water Header has occured.

- END -

AOP-022-01 002

AOP-022, "Loss of Service Water", provides instructions in the event of a break in the Service Water System in which ONE (1) of the following locations?

A. Auxiliary Building only

B. Auxiliary Building and Turbine Building

C. Auxiliary Building, Turbine Building and Intake area

✓D. Auxiliary Building, Turbine Building, Intake area and connecting headers to plant

weak but ok

Question: 51

Which ONE (1) of the following is assumed to operate normally to ensure that the RCS Pressure Safety Limit is **NOT** exceeded during a complete loss of external load without a direct reactor trip?

a. PZR PORVs

b. PZR Spray Valves

c. Main Steam Safety Valves

d. Steam Dumps

Answer:

c. Main Steam Safety Valves

QUESTION NUMBER: 51
TIER/GROUP: 3

K/A: 2.2.22
Knowledge of limiting conditions for operations and safety limits.

K/A IMPORTANCE: RO 3.4

10CFR55 CONTENT: 55.41(b) RO 5

OBJECTIVE: PZR-12
State the Technical Specification Limitations and explain the bases for the PZR and PRT.

REFERENCES: TS Basis 2.1.2

SOURCE: New Significantly Modified Modified/Direct **X**

Bank Number PZR-12 007

JUSTIFICATION:

a. Plausible since these will be expected to operate to limit the pressure rise. Credit is not taken for any control systems in the analysis.

b. Plausible since these will be expected to operate to limit the pressure rise. Credit is not taken for any control systems in the analysis.

c. **CORRECT** Only the PZR safeties and Main Steam safeties are taken credit for operating to limit the pressure transient. Credit is not taken for any control systems.

d. Plausible since these will be expected to operate to limit the pressure rise. Credit is not taken for any control systems in the analysis.

DIFFICULTY:
Comprehensive/Analysis Memory **X** Rating 2

Knowledge of the basis for Tech Spec Safety Limits.

REFERENCES SUPPLIED: NONE

PSA RELATED

BASES (continued)

APPLICABLE SAFETY ANALYSES

The RCS pressurizer safety valves, the main steam safety valves (MSSVs), and the reactor high pressure trip have settings established to ensure that the RCS pressure SL will not be exceeded.

The RCS pressurizer safety valves are sized to prevent system pressure from exceeding the design pressure by more than 10%, as specified in Section III of the ASME Code for Nuclear Power Plant Components (Ref. 2). The transient that establishes the required relief capacity, and hence safety valve size requirements and lift settings, is a complete loss of external load without a direct reactor trip. During the transient, no control actions are assumed, except that the reactor is assumed to trip when the RCS pressure reaches the high RCS pressurizer pressure trip setpoint, the RCS pressurizer safety valves are assumed to open when the RCS pressure reaches the RCS safety valve setpoint, and the MSSVs on the secondary plant are assumed to open when the main steam pressure reaches MSSV settings.

The Reactor Protection System setpoints specified in Limiting Condition for Operations (LCO) 3.3.1, together with the settings of the RCS Pressurizer Safety Valves and MSSVs, provide pressure protection for normal operation and transients. The reactor high pressure trip setpoint specified in LCO 3.3.1 is specifically set to provide protection against overpressurization (Ref. 5). The safety analyses for both the high pressure trip and the RCS pressurizer safety valves are performed using conservative assumptions relative to pressure control devices.

More specifically, no credit is taken for operation of the following:

a. Pressurizer power operated relief valves (PORVs);

b. Main steam power operated relief valves;

c. Steam Dump System;

d. Reactor Control System;

e. Pressurizer Level Control System; or

f. Pressurizer spray valves.

(continued)

Question: 52

During the performance of FRP-H.2, "Response To Steam Generator Overpressure", the operator is directed to verify that feedwater is isolated to the affected S/G.

Which ONE (1) of the following is the basis for this direction?

a. With the S/G overpressurized, additional feedwater could cause excessive cooling of the RCS resulting in a Safety Injection

b. With the S/G overpressurized, additional feedwater could cause excessive cooling of the S/G resulting in thermal shock

c. Main Feedwater flow is a potential source of S/G overpressurization

d. To protect the feedwater piping from exceeding design pressure

Answer:

c. Main Feedwater flow is a potential source of S/G overpressurization

QUESTION NUMBER: 52
TIER/GROUP: 1/3

K/A: WE13EA2.2
Ability to determine and interpret the following as they apply to Steam Generator Overpressure: Adherence to appropriate procedures and operation within the limitations in the facility's license and amendments.

K/A IMPORTANCE: RO 3.0

10CFR55 CONTENT: 55.41(b) RO 10

OBJECTIVE: FRP-H.2-03
Demonstrate an understanding of selected steps, cautions, and notes in FRP-H.2 by explaining the basis of each.

REFERENCES: FRP-H.2
FRP-H.2 Basis

SOURCE: New Significantly Modified Modified/Direct **X**

Bank Number FRP-H.2-03 002

JUSTIFICATION:

a. Plausible since excessive FW could result in an SI caused by an excessive RCS cooldown. Not a concern in this scenario since the magnitude of any cooldown would be minimal.

b. Plausible since excessive FW could result in thermal shock. Not a concern in this scenario.

c. **CORRECT** An overpressurization condition could be caused by an overfill condition. Ensuring FW is isolated eliminates this potential cause.

d. Plausible since an overpressure condition in the SG will cause required FW pressure to rise. Not a concern since still well below FW design pressure of 1525 psig.

DIFFICULTY:
Comprehensive/Analysis Memory **X** Rating 2

Knowledge of basis for actions contained in ERGs.

REFERENCES SUPPLIED: NONE

STEP	INSTRUCTIONS	RESPONSE NOT OBTAINED
	NOTE Throughout this procedure, "affected" refers to any S/G in which pressure is greater than 1140 psig.	
1.	Check S/G Pressures - ANY GREATER THAN 1140 PSIG	Reset SPDS AND return to procedure and step in efffect.
2.	Verify FW Isolated To Affected S/G(s): • FW REG Valve(s) - CLOSED • FW REG BYP Valve(s) - CLOSED • FW HDR SECTION Valve(s) - CLOSED	
* 3.	Check Affected S/G(s) Level - LESS THAN 90% [86%]	Go To FRP-H.3, Response To Steam Generator High Level.
4.	Check APP-002-F7, INSTR AIR HDR LO PRESS - EXTINGUISHED	Align nitrogen to Steam Line PORVs using AOP-017, Loss Of Instrument Air.
5.	Dump Steam From The Affected S/G(s) Using One Of The Following Methods: • STEAM LINE PORV(s) OR • Unlock and close the breaker at MCC-8 for the affected S/G(s) and use the MSIV BYP(s) OR • STEAM SHUTOFF(s) to SDAFW PUMP	Observe CAUTION prior to Step 7 AND Go To Step 7.

RNP STEP	WOG STEP	BASIS/DIFFERENCES

RNP DIFFERENCES/REASONS

No significant differences.

SSD DETERMINATION

This is not an SSD.

N1 N1

WOG BASIS

PURPOSE: To define the terminology used in the guideline

BASIS:

The definition of the term "affected SG" reduces descriptive requirements throughout the remainder of the guideline.

RNP DIFFERENCES/REASONS

There are essentially no differences.

SSD DETERMINATION

This is not an SSD.

1 1

WOG BASIS

PURPOSE: To identify the specific steam generator that is affected

BASIS:

If the operator determines that any steam generator pressure is greater than the highest steamline safety valve setpoint, he has identified the affected SG(s) and continues in guideline FR-H.2. If all steam generator pressures are less than this value, there is no affected SG(s) and the operator is transferred to the guideline in effect.

RNP DIFFERENCES/REASONS

The RNP step has been reworded slightly, however the actions and intent are the same. There are essentially no differences.

SSD DETERMINATION

This is not an SSD.

2 2

WOG BASIS

PURPOSE: To ensure that the main FW system is not causing the overpressurization of the SG

BASIS:

Excessive feedwater flow to the affected SG may be one of the factors contributing to the overpressure condition. The operator should verify feedwater isolation to ensure that excessive FW flow is not contributing to the overpressure condition. The main FW control, bypass and isolation valves should be verified as closed or should be manually closed. This step addresses the possibility that a valve may have failed to automatically close as a result of automatic feedwater isolation that accompanied the reactor trip or SI condition.

RNP DIFFERENCES/REASONS

There are essentially no differences.

SSD DETERMINATION

This is not an SSD.

Question: 52

During the performance of FRP-H.2, "Response To Steam Generator Overpressure", the operator is directed to verify that feedwater is isolated to the affected S/G.

Which ONE (1) of the following is the basis for this direction?

nonsensitive

a. Main Feedwater should have automatically isolated on High-High S/G level — not a basis statement

b. With the S/G overpressurized, additional feedwater could cause excessive cooling to the S/G resulting in thermal shock

c. Main Feedwater flow is a potential source of S/G overpressurization

d. To protect the feedwater piping from exceeding design pressure

Answer:

c. Main Feedwater flow is a potential source of S/G overpressurization

QUESTION NUMBER: 52
TIER/GROUP: 1/3

K/A: WE13EA2.2
Ability to determine and interpret the following as they apply to Steam Generator Overpressure: Adherence to appropriate procedures and operation within the limitations in the facility's license and amendments.

K/A IMPORTANCE: RO 3.0

10CFR55 CONTENT: 55.41(b) RO 10

OBJECTIVE: FRP-H.2-03
Demonstrate an understanding of selected steps, cautions, and notes in FRP-H.2 by explaining the basis of each.

REFERENCES: FRP-H.2
FRP-H.2 Basis

SOURCE: New Significantly Modified Modified/Direct **X**

Bank Number FRP-H.2-03 002

JUSTIFICATION:

a. Plausible since FRV and Bypass valves close on high-high level. Not intended to be a verification of automatic actions.

b. Plausible since excessive FW could result in thermal shock. Not a concern in this scenario.

c. **CORRECT** An overpressurization condition could be caused by an overfill condition. Ensuring FW is isolated eliminates this potential cause.

d. Plausible since an overpressure condition in the SG will cause required FW pressure to rise. Not a concern since still well below FW design pressure of 1525 psig.

DIFFICULTY:
Comprehensive/Analysis Memory **X** Rating 2

Knowledge of basis for actions contained in ERGs.

REFERENCES SUPPLIED: NONE

Question: 53

Given the following conditions:

- The Unit is at 100% power
- APP-001-F7, INST AIR HDR LO PRESS, has alarmed.
- AOP-017, LOSS OF INSTRUMENT AIR, is in use.
- Instrument air pressure currently reads 79 psig and slowly decreasing.

SA to IA cross connect ...

a. valve, SA-5 will automatically OPEN to supply IA from SA through the IA aftercoolers and separators.

b. bypass filter isolation valves, SA-220 & SA-221, will automatically OPEN to supply IA from SA through a filter.

c. valve, SA-5 will be manually OPENED to supply IA from SA through the IA aftercoolers and separators.

d. bypass filter isolation valves, SA-220 & SA-221, will be manually OPENED to supply IA from SA through a filter.

Answer:

d. bypass filter isolation valves, SA-220 & SA-221, will be manually OPENED to supply IA from SA through a filter.

QUESTION NUMBER: 53
TIER/GROUP: 2/2

K/A: 079K1.01
Knowledge of the physical connections and/or cause-effect relationships between the SAS and the following systems: IAS

K/A IMPORTANCE: RO 3.0

10CFR55 CONTENT: 55.41(b) RO 4

OBJECTIVE: AIR-03
Describe the major flow path through the Instrument and Station Air System.

REFERENCES: AOP-017

SOURCE: New Significantly Modified Modified/Direct **X**

Bank Number AIR-03 007

JUSTIFICATION:

a. Plausible because SA-5 is opened in AOP-017. Valve must be manually aligned and does not supply IA through the IA aftercoolers and separators.

b. Plausible because SA-220 & 221 are opened in AOP-017. Valves must be manually aligned.

c. Plausible because SA-5 is opened in AOP-017. SA-5 does not supply IA through the IA aftercoolers and separators.

d. **CORRECT** Manual operator action is required to open SA-220 & 221 when IA pressure lowers below 80 psig.

DIFFICULTY:
Comprehensive/Analysis Memory **X** Rating 3

Knowledge of IA/SA system operational requirements.

REFERENCES SUPPLIED: NONE

STEP	INSTRUCTIONS	RESPONSE NOT OBTAINED
	NOTE IA-3821 is located on IA Dryer D.	
7.	Dispatch Operator(s) To Perform The Following:	
	a. Verify Station Air Compressor - RUNNING	a. Go To Step 7.c.
	b. Verify the following SA TO IA CROSS CONNECT BYPASS FILTER ISOLATION Valves - OPEN: • SA-220 • SA-221	b. Open SA-5, STATION AIR TO INST AIR CROSS CONNECT.
	c. Verify IA-18, AIR DRYER "A" & "B" BYPASS - OPEN	
	d. Verify the following Compressors - RUNNING • STATION AIR COMP • INST AIR COMP A • INST AIR COMP B	
	e. Check FCV-1740, AIR DRYER HIGH DP FLOW CONTROL Valve - OPEN	e. Open IA-3665, AIR DRYER "A" & "B" BYPASS.
	f. Open IA-3821, INSTRUMENT AIR DRYER "D" BYPASS	

Step	Description
2	Step 2 checks Instrument Air (IA) Header pressure less than 60 psig. Through research it has been determined that major system components required for power operation (i.e. feed reg valves, letdown valves) will start to drift closed. This step is to satisfy an INPO comment that stated "The common industry approach is to direct the operators to manually trip the reactor at a specific decreasing Instrument Air pressure". If pressure does decrease to less than 60 psig, then the operator is directed to trip the reactor in Step 3.
3	This step accomplishes two very important action items. First the reactor is manually tripped by the operator. This is in anticipation of loss of control to various air operated valves and their subsequent failing closed (air pressure less than 60 psig). The second action item transitions the operator to concurrently perform PATH-1 while continuing with this procedure.
4-5	During normal plant operations Air Compressor D or the Primary Air Compressor should operate to maintain header pressure. Air Compressor D is usually the lead compressor running continuously to maintain system pressure. This step is intended for the operator to start any available compressor that is in standby. It is assumed that Instrument Air Compressors A & B will be running in Auto if power is available.
6	This continuous action step checks pressure less than 80 psig. If less than 80 psig the operator is directed to steps that would further increase the supply of air into the IA system.
N7	This note describes the location of IA-3821 to help expedite the task performed.
7	Entering into this step signifies that Instrument Air problems have deteriorated to a point where air pressure is now less than 80 psig. The operator should be prepared for this since he would have received an Instrument Air low pressure alarm at 85 psig. Exiting this step we should find that: (1) Station Air Compressor is backing up the Instrument Air System. (2) Air dryers have been bypassed. (3) Station Air and Instrument Air Compressors are running The first substep requires the verification that the Station Air Compressor is running. If the compressor can not be started the RNO will bypass steps that cross-connect Station Air with Instrument Air. The second and third substep directs the operator to cross-connect the Station Air Header with the Instrument Air Header. Two methods are available to achieve this step: (1) The preferred step is addressed in the left column of this procedure (Open SA-220, SA-221 and verify open IA-18). This will allow the Service Air to pass through a filter to remove contaminants prior to passing into oil free Instrument Air Header.

Question: 54

Approximately 11 hours after a Large Break LOCA it is necessary to switch from cold leg recirculation to hot leg recirculation to ...

a. quench the boiling at the core exit and prevent boron precipitation.

b. prevent sediment or loose pieces from inhibiting downcomer flow.

c. prevent uneven heating and annealing of the thermal shield.

d. meet the SI flow requirement due to the reduction in decay heat.

Answer:

a. quench the boiling at the core exit and prevent boron precipitation.

LOGIC But no DISCRIM VALUE

QUESTION NUMBER: 54
TIER/GROUP: 1/2

K/A: 011EA2.08
Ability to determine or interpret the following as they apply to a Large Break LOCA: Conditions necessary for recovery when accident reaches stable phase

K/A IMPORTANCE: RO 3.4

10CFR55 CONTENT: 55.41(b) RO 10

OBJECTIVE: EPP-010-08
Given plant conditions, evaluate the appropriate actions to mitigate consequences of steps related to long term recirc events as directed in EPP-10.

REFERENCES: EPP-010 Basis

SOURCE: New Significantly Modified Modified/Direct **X**

Bank Number EPP-010-08 002

JUSTIFICATION:

a. **CORRECT** Hot leg recirculation is established to ensure boiling at the core exit does not result in boron plating out on the fuel assemblies.

b. Plausible since during an accident sediment and loose parts may exist in the RCS. Hot leg injection enters the core exit and does not effect the downcomer.

c. Plausible since injection water cools the thermal shield. This is actually cooled by cold leg injection or cold leg flow during normal operations.

d. Plausible since SI flow reduction is part of the sequence of taking the plant to cold shutdown following an accident. Flow through the hot legs will approach cold leg injection flow.

DIFFICULTY:
Comprehensive/Analysis Memory **X** Rating 2

Knowledge of basis for performing action in ERG.

REFERENCES SUPPLIED: NONE

PSA RELATED

DISCUSSION (From the WOG ES-1.4 Basis Document)

Guideline ES-1.4, TRANSFER TO HOT LEG RECIRCULATION, provides typical actions for transferring the safety injection system from the cold leg recirculation mode to the hot leg recirculation mode. The primary entry into ES-1.4 is from E-1, LOSS OF REACTOR OR SECONDARY COOLANT, Step 24, when the plant specific time for transferring to hot leg recirculation is reached. In this case a break in the RCS has occurred which is large enough to reduce the RCS pressure to less than the shutoff head pressure of the low-head SI pumps. After transfer to hot leg recirculation has been completed the operator should return to Step 25 of E-1.

If the break in the RCS is small enough such that the RCS pressure remains greater than the low-head SI pumps shutoff head pressure, Step 17 in E-1 would transfer the operator to ES-1.2, POST LOCA COOLDOWN AND DEPRESSURIZATION, Step 1. When in ES-1.2, the RWST level could reach the cold leg recirculation switchover setpoint. After performing the switchover to cold leg recirculation, the operator may eventually have to transfer to ES-1.4 when the time for transferring to hot leg recirculation is reached. However, if the plant is on cold leg recirculation and the operator is able to terminate SI and realign to normal charging, there is no need to transfer to ES-1.4. Since SI can be terminated, the RCS hot legs are subcooled and RCS inventory is sufficient to allow pressurizer heater operation. With these RCS conditions there would be no significant boiloff from the core or boron buildup in the core (see Section 2, DESCRIPTION). If the plant is on cold leg recirculation and the operator is not able to terminate SI, he may have to transfer to ES-1.4 at the appropriate time to perform the transfer to hot leg recirculation. Since this is a long term action, the plant engineering staff would have to make this evaluation. These concerns also apply to guidelines ECA-3.1, SGTR WITH LOSS OF REACTOR COOLANT - SUBCOOLED RECOVERY DESIRED, and ECA-3.2, SGTR WITH LOSS OF REACTOR COOLANT - SATURATED RECOVERY DESIRED, when you have a SGTR plus a LOCA.

After the transfer to hot leg recirculation has been completed, the operator should return to the appropriate step in the guideline which was being performed when the transition to ES-1.4 was made.

2. DESCRIPTION

Hot leg recirculation is implemented to terminate boiling in the core and to prevent boron precipitation in the core. Following a large cold leg break in the RCS, conservative analyses have shown that the boric acid concentration limit established by the NRC (the boric acid solubility limit of 27.53% minus 4% for conservatism) would be exceeded if cold leg recirculation is maintained for an extended period (see Reference 1). The analysis considers the increase in boric acid concentration in the reactor vessel during the long-term cooling phase of a LOCA assuming a conservatively small effective vessel volume including only the free volumes of the reactor core and the upper plenum below the bottom of the hot leg nozzles. This assumption conservatively neglects the mixing of boric acid solution with directly connected volumes, such as the reactor vessel lower plenum. The calculation of boric acid concentration in the reactor vessel considers a cold leg break of the reactor coolant system in which steam is generated in the core from decay heat while the boron associated with the boric acid solution is completely separated from the steam and remains in the effective vessel volume. The cold leg safety injection flow is not effective in counteracting this boiloff from the core since for larger breaks the downcomer level is low and the injection flow is primarily refilling the downcomer as opposed to the core, and no flushing of the core occurs. If the plant is transferred from cold leg to hot leg recirculation prior to the time the boric acid concentration limit is reached in the reactor vessel, the hot leg safety injection flow will dilute the vessel boron concentration by passing relatively dilute boron solution from the hot leg through the vessel to the cold leg break location and will terminate boiloff from the core. This will prevent boron precipitation in the core along with any resultant plateout on the fuel cladding which could reduce heat transfer from the fuel to the reactor coolant.

For a large hot leg break in the RCS, the safety injection flow delivered to the cold legs during cold leg recirculation will flow through the core and spill to the containment sump via the hot leg break. With the core being flushed there would be no boron buildup problem. After transfer to hot leg recirculation, the cold safety injection flow enters the core and absorbs decay heat energy. This will prevent boiloff from the core. Charging flow will continue to be provided to the RCS cold legs and will also help preclude any boron concentration buildup in the reactor vessel for hot leg breaks.

Question: 56

Which ONE (1) of the following is the reason the RCS is depressurized in FRP-P.1, "Response to Imminent Pressurized Thermal Shock"?

a. Allow the accumulators to inject

b. Reduce the subcooling margin

c. Increase pressurizer level

d. Increase safety injection flow

Answer:

b. Reduce the subcooling margin

QUESTION NUMBER: 56
TIER/GROUP: 1/1

K/A: WE08EK3.3
Knowledge of the reasons for the following responses as they apply to Pressurized Thermal Shock: Manipulation of controls required to obtain desired operating results during abnormal, and emergency situations.

K/A IMPORTANCE: RO 3.7

10CFR55 CONTENT: 55.41(b) RO 3

OBJECTIVE: FRP-P.1-03
Demonstrate an understanding of selected steps, cautions, and notes in FRP-P.1 by explaining the basis of each.

REFERENCES: FRP-P.1
FRP-P.1 Basis

SOURCE: New Significantly Modified Modified/Direct **X**

Bank Number FRP-P.1-03 002

JUSTIFICATION:

a. Plausible since depressurizing will cause the accumulators to inject which is a goal of FRP-C.1. Allowing the accumulators to inject in this condition will hinder the ability to depressurize.

b. **CORRECT** Concern with PTS is repressurization following rapid cooldown and depressurization or maintaining pressure while having a rapid cooldown. Depressurizing to lower subcooling margin minimizes the PTS concerns.

c. Plausible since depressurizing will cause pressurizer level to rise. This action is expected in many ERGs, but serves no purpose when attempting to mitigate the effects of a PTS event.

d. Plausible since depressurizing will cause safety injection flow to increase if still in operation. Safety injection flow is a large contributor to PTS events and is not desirable.

DIFFICULTY:
Comprehensive/Analysis **X** Memory Rating 3

Analysis of plant conditions to determine reasons for depressurizing during PTS event.

REFERENCES SUPPLIED: NONE

PSA RELATED

RNP STEP	WOG STEP	BASIS/DIFFERENCES
28-33	16	BASIS: The RCS pressure reduction is intended to decrease pressure stress on the vessel wall as much as possible. The RCS should be depressurized until RCS subcooling is less than (R.08)°F [(R.09)°F for adverse containment]. If a PORV is used and RCS subcooling decreases to less than (R.01)°F[(R.02)°F for adverse containment] before a PORV is closed or isolated, the operator should allow adequate time for the PORV or its associated block valve to close (i.e., the time necessary for the valve to stroke) before manually operating SI pumps as necessary to restore subcooling. If normal PRZR spray is not available, and the RCS cannot be depressurized using any PRZR PORV, then the operator is instructed to use auxiliary spray. This preferred order of the means to depressurize the RCS takes into account that letdown has not been established yet to heat the auxiliary spray flow and minimize the thermal shock to the spray nozzle. Once letdown has been established, using auxiliary spray for depressurization is preferred before using a PRZR PORV. If the operator is directed to return to this step after letdown has been established, and normal PRZR spray is not available, auxiliary spray should be used for depressurization. A second criterion, in addition to subcooling, for stopping the pressure reduction is PRZR level greater than (D.08)% [(D.09)% for adverse containment]. Limiting PRZR level ensures a substantial steam bubble which facilitates further pressure control. A third criterion for stopping the pressure reduction is RCS pressure less than (B.10) psig [(B.11) psig for adverse containment]. For certain postulated accidents, it is possible to enter FR-P.1, Step 16 with a low RCS pressure (less than approximately 200 psig) and greater than the required 10°Fsubcooling. It may be difficult to reduce RCS pressure any further per the RNO column. Since the intent of the step has been met, no further pressure reduction is necessary. KNOWLEDGE: RCS depressurization should be stopped when RCS subcooling based on core exit TCs is between (R.01)°F[(R.02)°Ffor adverse containment] and (R.08)°F[(R.09)°F for adverse containment] It is possible that this pressure reduction could result in loss of the normal conditions for RCP operation, i.e., minimum number one seal differential pressure or minimum number one seal leakoff flow. If either condition is lost, the affected RCP should be stopped. This action is not specifically included in this step, but is inferred by the pressure reduction. If subcooling decreases below the setpoint for reinitiating SI during the depressurization, the operator should take the appropriate actions such as closing the PORV or the block valve for a stuck open PORV, and wait to see if the actions are successful (i.e., allow adequate time for valves to stroke closed), before reinitiating SI. If the actions stop the depressurization and subcooling is restored, SI reinitiation is not necessary.

RNP STEP	WOG STEP	BASIS/DIFFERENCES

28-33 16 RNP DIFFERENCES/REASONS

The RNP step has been split into 6 steps to eliminate the multiple categories and sub-categories of complicated logicals in the WOG RNO step for depressurizing the RCS and to eliminate the prohibited "until" term used in the WOG AER step. The RNP steps for depressurization also include a note at each step detailing the information contained in the "Knowledge" section of the WOG Basis. It is not expected that the operator will remember that it is not necessary to reinitiate SI under the circumstances described in the WOG Basis.

The RNP step also does not include a setpoint for adverse conditions for the RCS pressure target of 200 psig. The instrument uncertainties for this channel are greater than 200 psig, in which case the WOG setpoint description states that the maximum should be 200 psig. This makes the setpoint 200 psig regardless of CV conditions.

SSD DETERMINATION

This is an SSD per criterion 4, 10, and 11.

C34 C17 WOG BASIS

PURPOSE: To alert the operator that pressure stress is a significant contributor to total vessel wall stress and that stable RCS conditions should be maintained

BASIS:
The thermal stress due to a rapid cooldown and the pressure stress are additive in the vessel wall. Use of charging and PRZR heaters in subsequent steps should be controlled so as not to increase RCS pressure. Maintaining a stable pressure will ensure that pressure stress in the vessel wall will remain at or below the minimum pressure stress established in the previous step. Stable temperature will result in decreasing thermal stresses as the temperature gradient is reduced by conduction through the wall.

RNP DIFFERENCES/REASONS

There are essentially no differences.

SSD DETERMINATION

This is not an SSD.

generator tube rupture), safety injection is the major cause of the excessive cooldown of the downcomer region of the reactor vessel. In addition, the safety injection flow may prevent a reduction in RCS pressure. So terminating safety injection as soon as possible limits the cooldown and RCS pressure.

Terminate Safety Injection

Safety injection termination criteria merit special attention. The termination criteria are relaxed compared to termination criteria in other emergency procedures. It requires only minimum subcooling and enough level in the reactor vessel to cover the core.

If either of the safety injection termination criteria cannot be satisfied and safety injection cannot be terminated, the operator is instructed to start the RCPs. This is not considered in the original analysis, which demonstrates that an RCP restart is not required in order to meet the Nuclear Regulatory Commission PTS risk goal for a typical Westinghouse plant. A separate analysis of the effect of an RCP restart on reactor vessel integrity has been made. The basis for this analysis was an assumption that a small pre-existing flaw did grow, and arrested at 3/4 of wall thickness before RCP restart. This is consistent with the assumptions of the original PTS analysis.

Starting an RCP does not result in any further growth of the flaw or loss of vessel integrity. In the case in which a flaw has not grown before RCP start, the subsequent heatup of the downcomer region decreases the possibility of flaw initiation. This is a result of the mixing of the cold incoming injection water and the warm reactor coolant, decreasing the likelihood for PTS.
If safety injection can not be terminated and an RCP can not be stopped the operator jumps ahead to the end of the procedure.

Depressurization

The FRG then directs the operator to depressurize the RCS to minimum subcooling. As far as the analysis is concerned, this is not a necessary step. This is why the procedure skips this step if safety injection cannot be terminated and an RCP is started. However, reducing the RCS pressure attempts to remove as much pressure stress as possible on the vessel wall.

Question: 56

Given the following conditions:

- A Reactor Trip and Safety Injection have occurred due to a Steam Generator Tube Rupture.
- The RCS has just been rapidly depressurized as directed by PATH-2.

Which ONE (1) of the following operator actions should be taken and why?

not plausible

a. Immediately terminate SI to minimize the release of radiation to the public

b. Immediately terminate SI to prevent an RCS integrity (PTS) event

c. Terminate SI after SI termination criteria are met to conserve RWST inventory

d. Terminate SI after SI termination criteria are met to prevent an RCS integrity (PTS) event

Answer:

d. Terminate SI after SI termination criteria are met to prevent an RCS integrity (PTS) event

QUESTION NUMBER: 56
TIER/GROUP: 1/1

K/A: WE08EK3.3
Knowledge of the reasons for the following responses as they apply to Pressurized Thermal Shock: Manipulation of controls required to obtain desired operating results during abnormal, and emergency situations.

K/A IMPORTANCE: RO 3.7

10CFR55 CONTENT: 55.41(b) RO 3

OBJECTIVE: MCD-08-01
Assuming no operator action, analyze the loss of Reactor Coolant System integrity event.

REFERENCES: PATH-2
MCD-8-LP

SOURCE: New Significantly Modified Modified/Direct **X**

Bank Number MCD-08-01 002

JUSTIFICATION:

a. Plausible since continued SI flow will result in increased flow to the SG. SI termination criteria must be met prior to terminating SI.

b. Plausible since SI termination should be performed as soon as criteria are met to minimize the likelihood of a repressurization event following the rapid cooldown. SI termination criteria must be met prior to terminating SI.

c. Plausible since SI termination must be met prior to terminating SI. This is directed by EPP-15 in the event of a loss of recirculation capability.

d. **CORRECT** SI termination should be performed as soon as criteria are met to minimize the likelihood of a repressurization event following the rapid cooldown.

DIFFICULTY:
Comprehensive/Analysis **X** Memory Rating 3

Analysis of plant conditions to determine when SI should be terminated and knowledge of basis for termination.

REFERENCES SUPPLIED: NONE

PSA RELATED

Question: 55

Given the following conditions:

- A plant startup is in progress with reactor power at 8%.
- Power is lost to Instrument Bus 2.

A Reactor Trip occurs as a result of a ...

a. SR High Flux Trip.

b. IR High Flux Trip.

c. PR High Flux - Low Setpoint Trip.

d. Low RCS Loop Flow Trip.

Answer:

b. IR High Flux Trip.

QUESTION NUMBER: 55
TIER/GROUP: 2/2

K/A: 012K4.05
Knowledge of RPS design feature(s) and/or interlock(s) which provide for the following: Spurious trip protection

K/A IMPORTANCE: RO 2.7

10CFR55 CONTENT: 55.41(b) RO 6

OBJECTIVE: AOP-024-04
Demonstrate an understanding of selected steps, cautions, and notes in AOP-024 by explaining the basis of each.

REFERENCES: SD-011

SOURCE: New Significantly Modified **X** Modified/Direct

Bank Number AOP-024-04 002

JUSTIFICATION:

a. Plausible since SR high flux trip is 1/2 and a loss of power will cause bistables to trip. SR has been deenergized with trip blocked at P-6 during startup.

b. **CORRECT** With power below P-10, a loss of power to the IR bistables will cause a reactor trip since the IR high flux trip is not yet blocked.

c. Plausible since one channel of PR bistables will trip and low setpoint trip is not blocked until above P-10. Coincidence for trip is 2/4 channels.

d. Plausible since a single loop loss of flow will cause a trip above P-8 and P-8 is input by PR channels. Requires 2/4 PR channels above P-8 and requires 2/3 low flow channels on single loop.

DIFFICULTY:
Comprehensive/Analysis **X** Memory Rating 3

Analysis of effect of loss of power at low power conditions.

REFERENCES SUPPLIED: NONE

out of 4 Power Range Channels reach 10% (P-10). The automatic block is removed when 3 out of 4 Power Range Channels are below 10% (P-10), however, this does not reinstate the trip; it may be manually reinstated between 10^{-10} amps (P-6) and 10% (P-10). The manual block is removed when both Intermediate Range Channels are below 10^{-10} amps (P-6).

A Level Trip Bypass Switch allows testing a Source Range Channel without causing a Reactor Trip.

b. Setpoint - NC-31D, NC-32D/10^5 cps

4.1.5.2 Intermediate Range High Flux Trip (Figure 19)

a. The Intermediate Range High Flux Trip provides protection during Reactor Startup and trips the Reactor when 1 out of 2 Intermediate Range Channels exceeds the Trip Setpoint. The trip may be manually blocked when 2 out of 4 Power Range Channels are above 10% (P-10). The manual block is automatically removed when 3 out of 4 Power Range Channels are below 10% (P-10).

A Level Trip Bypass Switch allows testing an Intermediate Range Channel without causing a Reactor Trip.

When an Intermediate Range Channel is blocked or bypassed, the Rod Stop associated with that Intermediate Range is blocked.

b. Setpoint - NC-35F, NC-36F/Reactor Trip Current equivalent to 25% Full Power

Setpoint - NC-35E, NC-36E/Rod Stop Current equivalent to 20% Full Power

4.1.5.3 Power Range High Flux Trip - Low Setpoint (Figure 20)

a. The Power Range High Flux Trip - Low Setpoint provides protection for power excursions beginning from low power during a startup and trips the Reactor when 2 out of 4 Power Range Channels exceeds the Trip Setpoint. The trip may be manually blocked when 2 out of 4 Power Range Channels exceed 10% (P-10). The manual block is automatically removed when 3 out of 4 Power Range Channels are below 10% (P-10).

b. Setpoint - NC-41P, NC-42P, NC-43P, NC-44P/24% Reactor Power

INFORMATION USE ONLY

INTERMEDIATE RANGE TRIP LOGIC

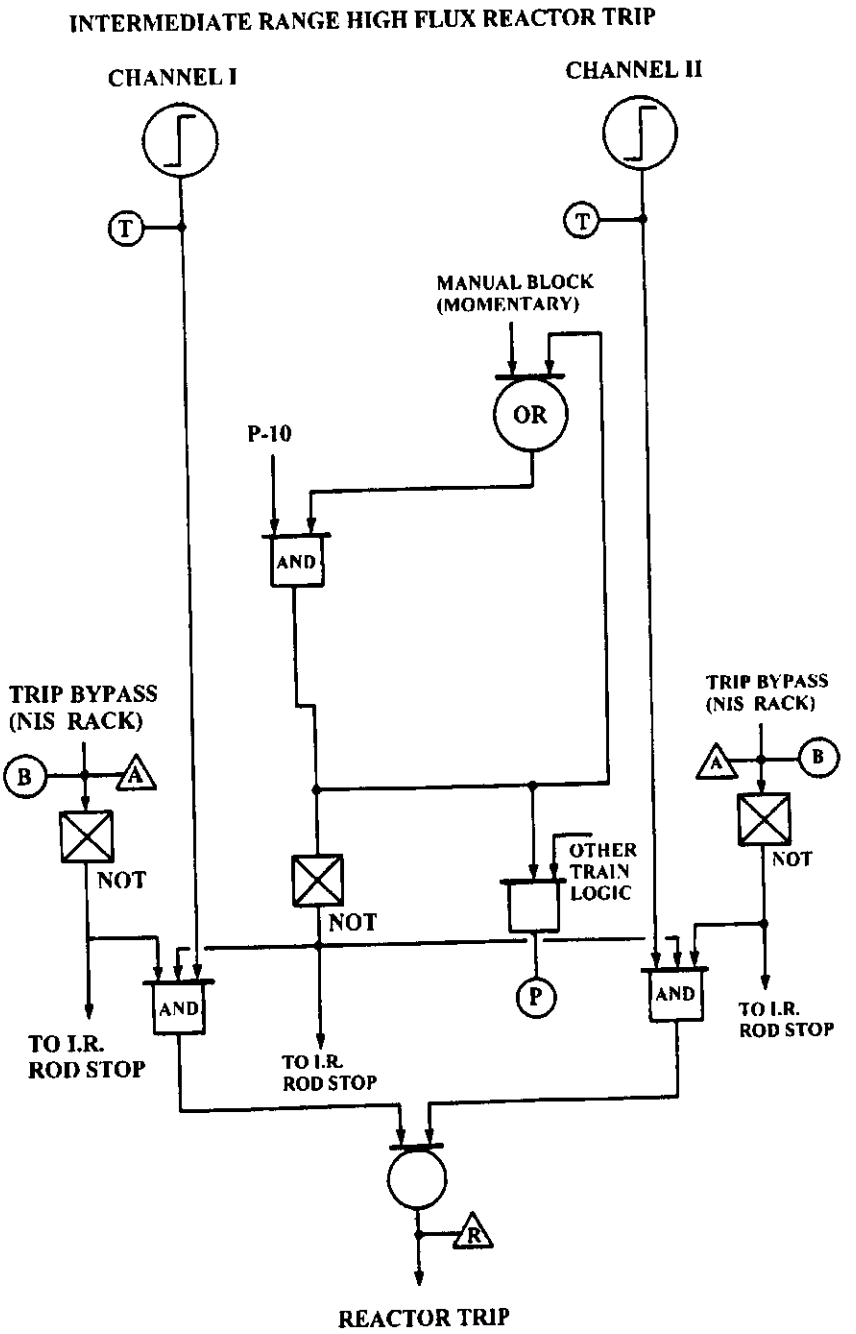

AOP-024-04 002

Given the following plant conditions:

- A plant startup is in progress with reactor power at 8%
- The turbine is being paralleled to the grid
- Power is lost to instrument bus 2

Which ONE (1) of the following describes the actions that will occur due to the loss of instrument bus 2?

✓A. Reactor trip and turbine trip.

B. Reactor trip without turbine trip.

C. The first three steam dump valves will fail closed.

D. Other than deenergized instruments, no immediate consequences will be seen.

Question: 57

Given the following conditions:

- Plant load is being reduced because of high vibrations on Condensate Pump "A".
- The plant is currently at 48% power.
- Two Main Feedwater Pumps, two Condensate Pumps and a Heater Drain Tank Pump are in service.
- Condensate Pump "A" trips.

Which ONE (1) of the following describes the expected plant response?

a. Both Main Feedwater Pumps will trip resulting in a Reactor trip due to low Steam Generator level

b. One Main Feedwater Pump will trip but sufficient Feedwater flow exists to maintain Steam Generator level

c. One Main Feedwater Pump will trip which will result in insufficient Feedwater flow to maintain Steam Generator level

d. A Turbine runback will occur reducing steam flow to within the capacity of the available feedwater flow

Answer:

b. One Main Feedwater Pump will trip but sufficient Feedwater flow exists to maintain Steam Generator level

QUESTION NUMBER: 57
TIER/GROUP: 2/1

K/A: 056K1.03
Knowledge of the physical connections and/or cause-effect relationships between the Condensate System and the following systems: MFW

K/A IMPORTANCE: RO 2.6

10CFR55 CONTENT: 55.41(b) RO 5

OBJECTIVE: AOP-010-03
Demonstrate an understanding of selected steps, cautions, and notes in AOP-010 by explaining the basis of each.

REFERENCES: AOP-010

SOURCE: New Significantly Modified Modified/Direct **X**

Bank Number AOP-010-03 002 **NRC Exam 97-1**

JUSTIFICATION:

a. Plausible since a low suction pressure condition would cause both FW pumps to trip. Only a single FWP trips due to the interlock since condensate pressure will be adequate.

b. **CORRECT** The train-related MFW pump will trip on a Condensate Pump trip. A single Condensate Pump and MFW pump are capable of supplying adequate FW flow for this power level.

c. Plausible since a single MFW pump will trip. Adequate FW is available at this power level.

d. Plausible since at higher power levels the operator is required to reduce steaming rate. Automatic turbine runback does not occur on this event.

DIFFICULTY:
Comprehensive/Analysis **X** Memory Rating 2

Analysis of the effect of a loss of a condensate pump on the feedwater system and the subsequent effect on SG levels.

REFERENCES SUPPLIED: NONE

STEP	INSTRUCTIONS	RESPONSE NOT OBTAINED
4.	Go To The Appropriate Step from The Table Below:	

EVENT	STEP
Main Feed Pump Trip	Step 5
Condensate <u>AND</u> Feed Pump Trip	Step 9
Condensate Pump Trip Without MFP Trip	Step 45
Heater Drain Pump Trip	Step 14
Pipe Break / Leak	Step 20
Other	Step 23

5.	Check Reactor Power - LESS THAN 80%	Trip the Reactor and Go To Path-1.
6.	Check Reactor Power - GREATER THAN 60%	Go To Step 12.
7.	Reduce Turbine Load At 1%/MIN To 5%/MIN To Achieve Less Than 60% Reactor Power	
8.	Go To Step 12	
9.	Check Reactor Power - LESS THAN 70%	Trip the Reactor and Go To Path-1.
10.	Check Reactor Power - GREATER THAN 50%	Go To Step 12.
11.	Reduce Turbine Load At 1%/MIN To 5%/MIN To Achieve Less Than 50% Reactor Power	

DISCUSSION (Continued)

At no time in the procedure should the operator fail to trip the plant should conditions arise that warrant a reactor trip. If the operator should realize that due to power level and conditions causing the transient, a trip is unavoidable, then the plant should be tripped.

The paragraphs below will summarize the actions and strategy for the various entry conditions to this procedure.

Feed Pump Trip

The most severe of the transients is a Main Feed Pump Trip coincident with a Condensate Pump trip from full power. The mitigation strategy for this event is to trip the unit. The power level reduction required is very large and the time available very short. In order to reduce power below the point needed for matching steam flow and feed flow, power must be reduced at a rate large enough to actuate steam dump. Steam dump actuation compounds the problem, therefore in order to prevent the trip steam dump would be required to be placed in a condition to prevent operation. This in turn will increase primary plant pressure from excessive Tavg swings. Rather than potentially challenge the PZR PORVs and to provide conservative guidance, the reactor will be tripped for any MFP trip greater than 80%, or Condensate Pump and Feed Pump trip greater than 70%. (CR 98-0204)

Feed Pump trips at a power level less than these values will be mitigated by a power reduction within the normal maneuvering rates of 1% to 5%.

Condensate Pump Trip

If only one Condensate Pump is running and it trips, the standby pump should start. If it does not, then the Feed Pump will trip, resulting in a total loss of feed water. If two Condensate Pumps are running and only one Feed Pump, then a Condensate Pump trip will not result in a significant feed transient unless reactor power is above 50%. If two Feed Pumps are running, one will trip when the Condensate Pump trips, which is covered by the Feed Pump trip scenario (see above).

BASIS DOCUMENT, MAIN FEEDWATER/CONDENSATE MALFUNCTION

INDIVIDUAL STEP DESCRIPTION:

Step	Description
1	This step is placed early in the procedure to address a malfunction of the automatic control circuitry. Early action to match steam and feed flows will stabilize S/G levels to allow diagnosis of the failure. Load changes are stopped to aid the operator in maintaining level control. If FRV or FRV Bypass valve failures will not allow the operator to obtain control, then the plant is tripped. This step is an immediate action step.
2-3	These steps trip the reactor should a reactor trip setpoint be approached. This is a continuous action step so that should it become apparent to the operator that the event is not survivable or that a trip is imminent, a manual trip should be performed.
4	This step provides transitional guidance to the operator based on the event causing entry to the procedure. This procedure is designed to mitigate Feedwater Transients resulting from numerous possible causes. Transitioning via a table has been shown to be more efficient and simpler to use rather than numerous transitions within the procedure. This will improve the human factors of the procedure by reducing the total transitions required.
5-8	These steps are reached if a Main Feedwater Pump trip has occurred. First power is checked between (and including) 60% to 80%. If power is greater than 80% the reactor will be tripped. 80% is chosen based on Management discretion for conservative decision making. Larger power reductions require more rapid maneuvering and may challenge the primary side PORVs. If power is below 60% no power reduction will be required. For power levels greater than 60% power will be reduced at rate chosen by the CRSS, between 1% and 5% per minute. The closer the plant is to 60%, the lower the rate necessary to match steam and feed flow. 5% per minute is the maximum normal maneuvering rate of the plant. If a power reduction is required at rates above this value, the reactor should be tripped.
9-11	These steps are reached if both a Condensate Pump and a Main Feed Pump have tripped. This is the most severe of the transients. These steps are the same as for a Main Feed Pump trip, with the exception that the target power levels are 70% and 50% due to the more severe transient.

Question: 58

Given the following conditions:

- Fuel movement in Containment is in progress.
- The CV Upender operator reports that CV humidity is 55%.

Which ONE (1) of the following describes the required control room response?

a. Stop the CV purge **AND** terminate Refueling activities until humidity is $\leq$ 50%

b. Stop the CV purge **OR** terminate Refueling activities until humidity is $\leq$ 50%

c. Continue the CV purge, **BUT** terminate Refueling activities until humidity is $\leq$ 50%

d. Continue the CV purge **AND** Refueling activities since humidity is within limits

Answer:

d. Continue the CV purge **AND** Refueling activities since humidity is within limits

QUESTION NUMBER: 58
TIER/GROUP: 3

K/A: 2.2.27
Knowledge of the refueling process.

K/A IMPORTANCE: RO 2.6

10CFR55 CONTENT: 55.41(b) RO 10

OBJECTIVE: FH-12
State the Technical Specification Limitations and explain the bases for the FH System.

REFERENCES: Tech Spec 3.9.7

SOURCE: New Significantly Modified **X** Modified/Direct

Bank Number FH-13 003

JUSTIFICATION:

a. Plausible since either one of these actions is acceptable if limit is exceeded. CV humidity limit of 70% has not been exceeded.

b. Plausible since either one of these actions is acceptable if limit is exceeded. CV humidity limit of 70% has not been exceeded.

c. Plausible since this would be acceptable if limit is exceeded. CV humidity limit of 70% has not been exceeded.

d. **CORRECT** Limit for CV humidity is 70%. Since given value is below limit no action is required.

DIFFICULTY:
Comprehensive/Analysis Memory **X** Rating 3

Knowledge of 1-hour TS LCO and immediate actions.

REFERENCES SUPPLIED: NONE

3.9 REFUELING OPERATIONS

3.9.7 Containment Purge Filter System

LCO 3.9.7 The Containment Purge Filter System shall be OPERABLE and operating.

APPLICABILITY: During CORE ALTERATIONS
During movement of irradiated fuel assemblies in containment.

ACTIONS

CONDITION	REQUIRED ACTION	COMPLETION TIME
A. Containment Purge Filter System inoperable. OR Containment Purge Filter System not in operation.	A.1 Close each penetration providing direct access from the containment atmosphere to the outside atmosphere by a manual or automatic valve, blind flange, or equivalent method.	Immediately
	OR	
	A.2.1 Suspend CORE ALTERATIONS.	Immediately
	AND	
	A.2.2 Suspend movement of irradiated fuel assemblies within containment.	Immediately

SURVEILLANCE REQUIREMENTS

SURVEILLANCE		FREQUENCY
SR 3.9.7.1	Verify relative humidity of containment atmosphere to be processed by the Containment Purge Filter System is ≤ 70%.	1 hour
SR 3.9.7.2	Verify the Containment Purge Filter System is in operation and maintaining containment pressure negative relative to the adjacent auxiliary building areas.	12 hours
SR 3.9.7.3	Perform required Containment Purge Filter System filter testing in accordance with the Ventilation Filter Testing Program (VFTP).	In accordance with the VFTP

FH-13 003

Given the following plant conditions:

- The unit Cold Shutdown for refueling
- Fuel movement in Containment and the Spent Fuel Pit is in progress
- The CV Upender operator reports that CV humidity is 73%

Which ONE (1) of the following describes the required control room response?

A. Stop the CV purge and terminate ALL Containment Refueling activities

B. CV purge can continue but terminate Containment refueling activities until CV humidity is within limits

✓C. Stop the CV purge and Containment Refueling activities can continue

D. No restrictions apply. Containment humidity is within required limits

Question: 59

Given the following conditions:

- The unit has been at 100% power for 10 days following a Refueling Outage.
- A turbine runback to 70% has just occurred.
- Control Bank D rods are at 90 steps.
- APP-005-E2, ROD CONT SYSTEM URGENT FAILURE, has alarmed.
- APP-005-B5, ROD BANKS A/B/C/D LO LIMIT, has alarmed.
- APP-005-C5, ROD BANKS A/B/C/D LO-LO LIMIT, has alarmed.
- The urgent failure condition **CANNOT** be cleared.

To clear the LO LIMIT and LO-LO LIMIT alarms reactor power must be limited to a **MAXIMUM** of approximately ...

a. 54%.

b. 59%.

c. 63%.

d. 70%.

Answer:

c. 63%.

QUESTION NUMBER: 59
TIER/GROUP: 2/1

K/A: 001K3.01
Knowledge of the effect that a loss or malfunction of the CRDS will have on the CVCS

K/A IMPORTANCE: RO 2.9

10CFR55 CONTENT: 55.41(b) RO 2

OBJECTIVE: AOP-001-07
Determine the action(s) required by Technical Specifications associated with AOP-001.

REFERENCES: AOP-001
Station Curve Book Curve 1.9A

SOURCE: New Significantly Modified **X** Modified/Direct

Bank Number AOP-001-04 028

JUSTIFICATION:

a. Plausible since this is the lo limit alarm for 90 steps at EOL. Using BOL curve, lo limit alarm is 63%.

b. Plausible since this is the lo-lo limit alarm for 90 steps at EOL. Using BOL curve, lo limit alarm is 63%.

c. **CORRECT** At 90 steps, the lo-lo limit alarm comes in at approximately 70% and the lo limit alarm comes in at approximately 63.5% power.

d. Plausible since this is the lo-lo limit alarm for 90 steps at BOL. Lo limit alarm is 63%.

DIFFICULTY:
Comprehensive/Analysis **X** Memory Rating 3

Interpretation of rod insertion limit curves.

REFERENCES SUPPLIED: Station Curve Book Curves 1.9A/B, Tables 1.9A/B

STEP	INSTRUCTIONS	RESPONSE NOT OBTAINED

SECTION B

IMMOVABLE/MISALIGNED RODS

(Page 2 of 31)

7. Contact I&C And Engineering To Investigate And Correct The Cause Of The Urgent Failure Alarm

****

CAUTION

Movement of Control Rods except as directed by subsequent steps to realign a rod could cause further misalignment.

****

* 8.	Check For Power Reduction - REQUIRED	IF a power reduction becomes necessary, THEN perform Step 9. Go To Step 10.

9. Perform The Following:

- Borate to reduce Reactor power using OP-301, Chemical and Volume Control System (CVCS)
- Adjust Turbine load to maintain Tavg to within +0.5 to -2.5°F of Tref

HBR2 CYCLE INDEPENDENT CURVE

REV. 161

ROD INSERTION LIMITS, BOL TO MOL
CURVE 1.9A

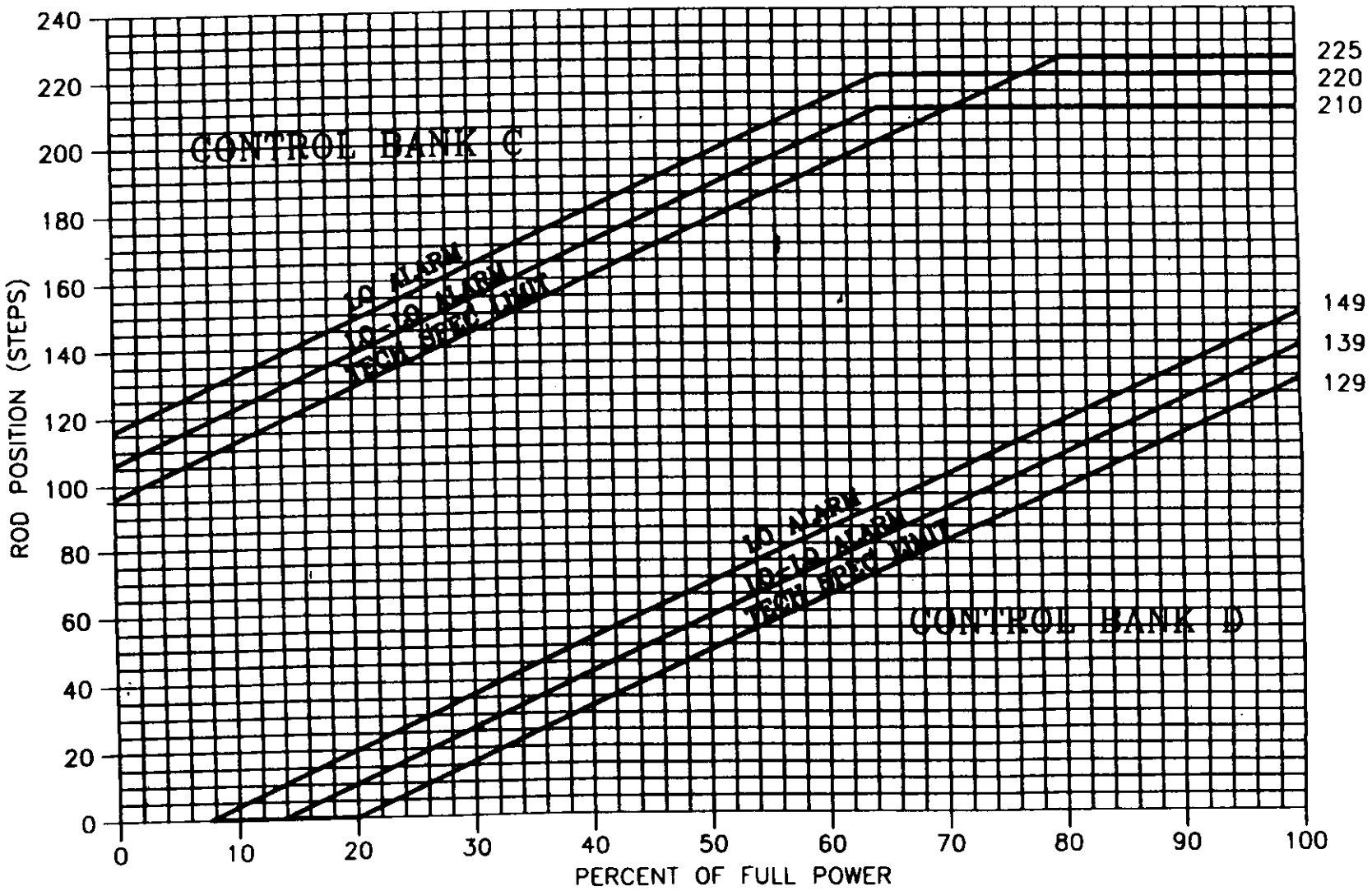

William R Ziegler 10/9/96
DRAWN BY/DATE

WJH/gl 10/10/96
CHECKED BY/DATE

OPERATIONS CONCURRENCE IS DOCUMENTED ON THE DCF REVIEW FORM

AOP-001-04 028

Given the following plant conditions:

- The unit was at or near 100% power for 390 days
- A turbine runback to 68% has just occurred
- Control Bank D rod H4 indicates 0 inches
- The rod bottom light for H4 is ON
- The step counter for Control Bank D is at 105 Steps
- AOP-001, Malfunction of Reactor Control System, has been entered

Which ONE (1) of the following describes the required action and its basis under these conditions ? Note: Plant Curve Book Provided

✓A. Rods are above the Technical Specification limit but below the LO-LO limit alarm. Borate to restore Control Rod Bank D above the insertion limits to ensure adequate Shutdown Margin is available.

B. Rods are above the Technical Specification limit but below the LO-LO limit alarm. Borate to allow rod withdrawal to return Axial Flux Difference to the normal band.

C. Rods are below the Technical Specification limit. Borate to restore Control Rod Bank D above the insertion limits to ensure adequate Shutdown Margin is available.

D. No rod insertion limit has been exceeded. Borate to allow rod withdrawal to return Axial Flux Difference to the normal band.

Question: 59

Given the following conditions:

- The unit has been at 100% power for 10 days following a Refueling Outage.
- A turbine runback to 70% has just occurred.
- Control Bank D rods are at 90 steps.
- APP-005-E2, ROD CONT SYSTEM URGENT FAILURE, has alarmed.
- APP-005-B5, ROD BANKS A/B/C/D LO LIMIT, has alarmed.
- APP-005-C5, ROD BANKS A/B/C/D LO-LO LIMIT, has alarmed.
-

Assuming the urgent failure condition **CANNOT** be cleared, to clear the LO LIMIT and LO-LO LIMIT alarms reactor power must be limited to a **MAXIMUM** of approximately ...

a. 54%.

b. 59%.

c. 63%.

d. 70%.

Answer:

c. 63%.

QUESTION NUMBER: 59
TIER/GROUP: 2/1

K/A: 001K3.01
Knowledge of the effect that a loss or malfunction of the CRDS will have on the CVCS

K/A IMPORTANCE: RO 2.9

10CFR55 CONTENT: 55.41(b) RO 2

OBJECTIVE: AOP-001-07
Determine the action(s) required by Technical Specifications associated with AOP-001.

REFERENCES: AOP-001
Station Curve Book Curve 1.9A

SOURCE: New Significantly Modified **X** Modified/Direct

Bank Number AOP-001-04 028

JUSTIFICATION:

a. Plausible since this is the lo limit alarm for 90 steps at EOL. Using BOL curve, lo limit alarm is 63%.

b. Plausible since this is the lo-lo limit alarm for 90 steps at EOL. Using BOL curve, lo limit alarm is 63%.

c. **CORRECT** At 90 steps, the lo-lo limit alarm comes in at approximately 70% and the lo limit alarm comes in at approximately 63.5% power.

d. Plausible since this is the lo-lo limit alarm for 90 steps at BOL. Lo limit alarm is 63%.

DIFFICULTY:
Comprehensive/Analysis **X** Memory Rating 3

Interpretation of rod insertion limit curves.

REFERENCES SUPPLIED: Station Curve Book Curves 1.9A/B, Tables 1.9A/B

dk

Question: 60

Given the following conditions:

- The plant is in MODE 6.
- A loss of RHR occurs with a loss of RCS inventory.
- Refueling Cavity level has dropped more than 29" below the operating deck.
- The cavity seal is **NOT** leaking.
- AOP-020, "Loss of Residual Heat Removal," has been entered.

Which ONE (1) of the following describes the preferred order of injection paths available to control the loss of level situation?

a. 1. Cold leg injection
   2. Hot leg injection
   3. Charging

b. 1. Charging
   2. Cold leg injection
   3. Hot leg injection

c. 1. Charging
   2. Cold leg injection
   3. RWST gravity feed

d. 1. Cold leg injection
   2. RWST gravity feed
   3. VCT overpressure

Answer:

b. 1. Charging
   2. Cold leg injection
   3. Hot leg injection

QUESTION NUMBER: 60
TIER/GROUP: 2/3

K/A: 005K3.05
Knowledge of the effect that a loss or malfunction of the RHRS will have on ECCS

K/A IMPORTANCE: RO 3.7

10CFR55 CONTENT: 55.41(b) RO 10

OBJECTIVE: AOP-020-09
Determine the different flowpaths generated by AOP-020.

REFERENCES: AOP-020

SOURCE: New Significantly Modified Modified/Direct **X**

Bank Number AOP-020-09 004

JUSTIFICATION:

a. Plausible since all of these methods are used for makeup. Charging is the preferred method of makeup.

b. **CORRECT** With a loss of inventory and RHR not available the crew will first ensure charging is operating at maximum capacity, then start cold leg injection or hot leg injection if cold leg injection is not available.

c. Plausible since all of these methods will provide makeup if level continues to drop and the head of the cavity water lowers. Gravity feed is not an option due to the RWST being empty.

d. Plausible since all of these methods will provide makeup if level continues to drop and the head of the cavity water lowers. VCT overpressure is not a procedural options.

DIFFICULTY:
Comprehensive/Analysis Memory **X** Rating 3

Knowledge of preferred procedural order of system operations.

REFERENCES SUPPLIED: NONE

STEP	INSTRUCTIONS	RESPONSE NOT OBTAINED

NOTE

Use of the RWST with RCS Boron greater than RWST Boron is prohibited by Technical Specifications when an RHR Pump is NOT running. Use of the RWST under these conditions in AOP-020 has been interpreted to be a 10CFR50.54(x) deviation.

5.	Check Charging Pump Status - ALL STOPPED	Increase speed on the running Charging Pump to maximum. Go To Step 10.
6.	Establish Charging Flow As Follows:	
	a. Check VCT Level - GREATER THAN 12.5 INCHES	a. Perform the following: 1) Verify OPEN LCV-115B, EMERG MU TO CHG SUCT. 2) Verify CLOSED LCV-115C, VCT OUTLET. 3) Go To Step 6.e.
	b. Verify RCS makeup concentration set to value greater than current RCS boron.	
	c. Verify LCV-115C, VCT OUTLET - OPEN	
	d. Verify LCV-115B, EMERG MU TO CHG SUCT - CLOSED	
	e. Verify HIC-121, CHARGING FLOW Controller - ADJUSTED TO 0% (OPEN)	
	f. Verify CVC-310B, LOOP 2 COLD LEG CHG - OPEN	f. Verify OPEN CVC-310A, LOOP 1 HOT LEG CHG.
7.	Start One Charging Pump	
8.	Observe charging flow on FI-122A	

STEP	INSTRUCTIONS	RESPONSE NOT OBTAINED

Section B

Loss Of RHR Inventory - Vessel Head Off

(Page 11 of 15)

NOTE

IF alternate purification is lined up, THEN the Hot leg injection path AND SI PUMP C will NOT be available.

38.	Check SI Cold Leg injection flowpath - AVAILABLE	Establish SI Hot Leg injection as follows: a. Verify OPEN the following valves: • SI-856A AND SI-856B, SI PUMP RECIRC • SI-864A AND SI-864B, RWST DISCH • SI-878A AND SI-878B, SI DISCH CROSS CONN • SI-869, SI HOT LEG HDR b. Start one SI Pump. c. Using Key #31 OR 32, open one of the following valves: • SI-866A, LOOP 3 HOT LEG INJ OR • SI-866B, LOOP 2 HOT LEG INJ d. Observe flow on FI-940. e. Go To Step 42.

Question: 61

Which ONE (1) of the following describes a plant condition that would warrant entry into EPP-20, "LOCA OUTSIDE OF CONTAINMENT?"

a. A LOCA and R-5, Spent Fuel Pit Area, in alarm

b. A LOCA with **NO** increase in CV pressure or sump level and R-4, Charging Room, in alarm

c. A LOCA with R-2, Containment, in alarm

d. An RHR Pit Hi level alarm possible correct answer

See Distractor Analysis

FAC
SMS
d/c
REQ 15
EOP 24

Answer:

b. A LOCA with **NO** increase in CV pressure or sump level and R-4, Charging Room, in alarm

QUESTION NUMBER: 61
TIER/GROUP: 1/2

K/A: WE04G2.4.4
Ability to recognize abnormal indications for system operating parameters which are entry-level conditions for emergency and abnormal operating procedures. (LOCA Outside Containment)

K/A IMPORTANCE: RO 4.0

10CFR55 CONTENT: 55.41(b) RO 10

OBJECTIVE: EPP-020-02
Recognize the selected entry level conditions of EPP-20.

REFERENCES: EPP-020
PATH-1

SOURCE: New Significantly Modified Modified/Direct **X**

Bank Number EPP-020-02 003

JUSTIFICATION:

a. Plausible since a LOCA has occurred. No RCS penetrations enter this area.

b. **CORRECT** A LOCA without any corresponding indications in containment would require that the crew transition to EPP-020.

c. Plausible since a LOCA has occurred. Alarm is indicative that LOCA has occurred inside containment.

d. Plausible since an area alarm outside containment has occurred. Alarm can be caused by other system failures besides a LOCA.

DIFFICULTY:
Comprehensive/Analysis Memory **X** Rating 2

Knowledge of ERG transition criteria.

REFERENCES SUPPLIED: NONE

Purpose and Entry Conditions

(Page 1 of 1)

1. PURPOSE

This procedure provides actions to identify and isolate a LOCA outside Containment.

2. ENTRY CONDITIONS

Path-1, when there is abnormal radiation in the auxiliary building due to a loss of RCS inventory outside Containment.

- END -

Question: 62

Given the following plant conditions:

- The plant was initially in a normal 100% lineup.
- A loss of secondary steam load has occurred.
- The reactor did **NOT** automatically trip.

What is the effect of the transient on the following values, considering the change in RCS pressure **ONLY**?

	EFFECT OF RCS PRESSURE CHANGE ON OTΔT SETPOINT	**EFFECT OF RCS PRESSURE CHANGE ON DNBR**
a.	Decreases	Decreases
b.	Decreases	Increases
c.	Increases	Decreases
d.	Increases	Increases

Answer:

d.	Increases	Increases

QUESTION NUMBER: 62
TIER/GROUP: 2/2

K/A: 012K5.01
Knowledge of the operational implications of the following concepts as the apply to the RPS: DNB

K/A IMPORTANCE: RO 3.3

10CFR55 CONTENT: 55.41(b) RO 2

OBJECTIVE: MCD-01-07
Determine the core coolant thermo-dynamic states, using saturation curves.

REFERENCES: MCD-05

SOURCE: New Significantly Modified Modified/Direct **X**

Bank Number MCD-05-02 002

JUSTIFICATION:

a. Plausible since if RCS pressure lowers, DNBR also tends to lower. DNBR and OTΔT setpoint actually rise in response to this event.

b. Plausible since DNBR does rise in response to the actual RCS pressure change to this event. OTΔT setpoint actually riseS in response to this event.

c. Plausible since OTΔT setpoint does rise in this event. DNBR also rises in response to the change in pressure.

d. **CORRECT** With no heat removal RCS pressure rises. As pressure rises, the RCS tends to move further away from saturation, causing DNBR and OTΔT setpoint to rise.

DIFFICULTY:
Comprehensive/Analysis **X** Memory Rating 3

Analysis of effect of loss of load on RCS parameters during an ATWS event.

REFERENCES SUPPLIED: NONE

LOL ATWS RCS PRESSURE VS TIME

TP-MCD5-9 (Rev . 0)

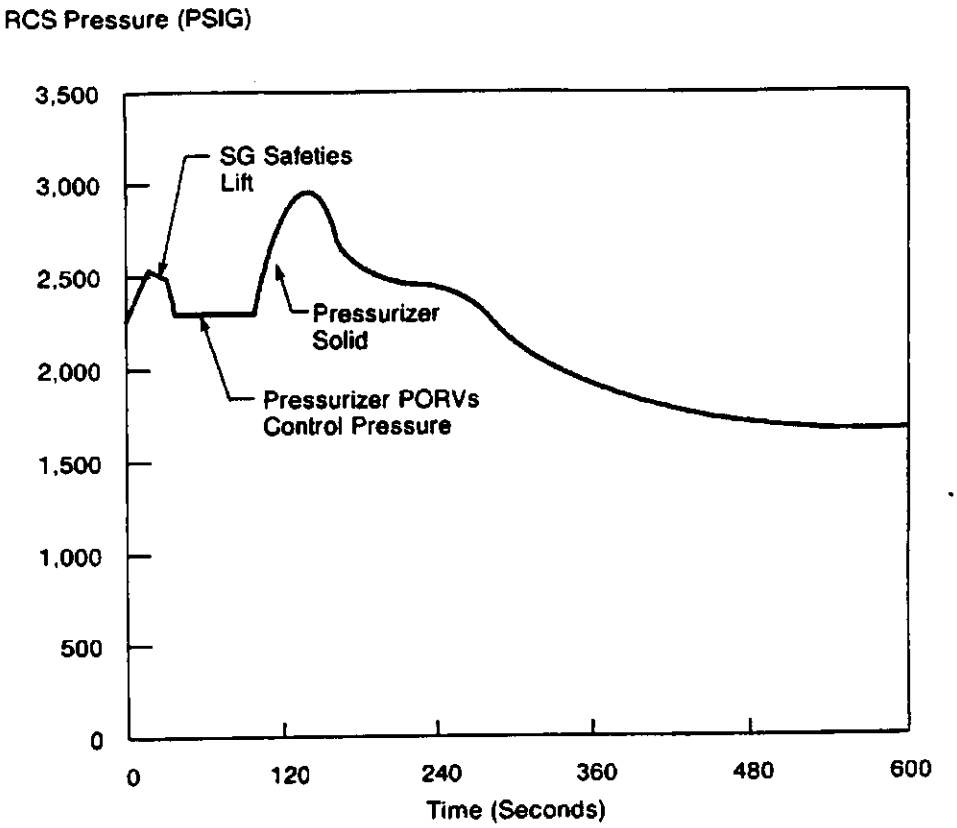

mcd5f09

Question: 62

Given the following plant conditions:

- The plant was initially in a normal 100% lineup.
- A loss of secondary steam load has occurred.
- The reactor did **NOT** automatically trip.

Which ONE (1) of the following describes the effect of this transient on the plant?

	RCS PRESSURE	EFFECT OF PRESSURE CHANGE ON DNBR
a.	Decreases	Decreases
b.	Decreases	Increases
c.	Increases	Decreases
d.	Increases	Increases

Answer:

d.	Increases	Increases

QUESTION NUMBER: 62
TIER/GROUP: 2/2

K/A: 012K5.01
Knowledge of the operational implications of the following concepts as the apply to the RPS: DNB

K/A IMPORTANCE: RO 3.3

10CFR55 CONTENT: 55.41(b) RO 2

OBJECTIVE: MCD-01-07
Determine the core coolant thermo-dynamic states, using saturation curves.

REFERENCES: MCD-05

SOURCE: New Significantly Modified Modified/Direct **X**

Bank Number MCD-05-02 002

JUSTIFICATION:

a. Plausible since if RCS pressure lowers, DNBR also tends to lower. RCS pressure actually rises in response to this event.

b. Plausible since DNBR does rise in response to the actual RCS pressure change to this event. RCS pressure actually rises in response to this event.

c. Plausible since RCS pressure does rise in this event. DNBR also rises in response to the change in pressure.

d. **CORRECT** With no heat removal RCS pressure rises. As pressure rises, the RCS tends to move further away from saturation, causing DNBR to rise.

DIFFICULTY:
Comprehensive/Analysis **X** Memory Rating 3

Analysis of effect of loss of load on RCS parameters during an ATWS event.

REFERENCES SUPPLIED: NONE

Question: 62

Given the following plant conditions:

- The plant was initially in a normal 100% lineup.
- A loss of secondary steam load has occurred.
- The reactor did **NOT** automatically trip.

What is the effect of the transient on the following parameters, considering the change in RCS pressure only?

~~Which ONE (1) of the following describes the effect of this transient on the plant?~~

	EFFECT OF RCS PRESSURE CHANGE ON OTΔT SETPOINT	EFFECT OF RCS PRESSURE CHANGE ON DNBR
a.	Decreases	Decreases
b.	Decreases	Increases
c.	Increases	Decreases
d.	Increases	Increases

Answer:

d.	Increases	Increases

Question: 63

Given the following conditions:

- A natural circulation cooldown is in progress following a loss of offsite power and a fire in the south cable vault.
- RCS Pressure is being reduced to 1200 psig when PZR level rapidly increases from 25% to 78%.

The likely cause of this level increase is ...

a. steam void formation in the RX vessel head.

b. S/G PORV's failing shut with resulting heatup causing RCS liquid expansion.

c. swell of PZR liquid due to opening of the Auxiliary Spray Valve to lower RCS pressure.

d. swell of PZR liquid due to opening of a PZR PORV to lower RCS pressure.

Answer:

a. steam void formation in the RX vessel head.

QUESTION NUMBER: 63
TIER/GROUP: 1/1

~~K/A: 055EK1.02~~
Knowledge of the operational implications of the following concepts as they apply to the Station Blackout: Natural circulation cooling

K/A IMPORTANCE: RO 4.1

10CFR55 CONTENT: 55.41(b) RO 5

OBJECTIVE: DSP-007-03
Demonstrate an understanding of selected steps, cautions, and notes in DSP-007 by explaining the basis of each.

REFERENCES: DSP-007

SOURCE: New Significantly Modified Modified/Direct **X**

Bank Number DSP-007-03 001

JUSTIFICATION:

a. **CORRECT** Rapidly reducing RCS pressure without removing heat from the vessel head due to no flow in the area on natural circulation will result in the formation of voids in the head region. This will cause a rapid influx of water into the pressurizer.

b. Plausible since a heatup will result in liquid expansion. Magnitude of expansion is significantly less than identified change in level.

c. Plausible since swell occurs in the SG which is also a saturated system. Swell is a phenomena limited to the SGs due to recirculation flow. Although density decreases in the PZR as pressure lowers, the volume change does not approach this extreme.

d. Plausible since swell occurs in the SG which is also a saturated system. Swell is a phenomena limited to the SGs due to recirculation flow. Although density decreases in the PZR as pressure lowers, the volume change does not approach this extreme.

DIFFICULTY:
Comprehensive/Analysis **X** Memory Rating 3

Comprehension of relative temperatures of head versus saturation conditions in the RCS.

REFERENCES SUPPLIED: NONE

STEP	INSTRUCTIONS	RESPONSE NOT OBTAINED

CONTINUOUS USE

ATTACHMENT 1

CSD USING THE DEDICATED SHUTDOWN BUS

(Page 5 of 33)

NOTE

- Minimizing Charging Pump speed if Instrument Air is available will reduce the number of Charging Pump starts.
- The Charging Pump Controller will fail to full speed with Instrument Air unavailable.
- Starting duty limitations allow only 4 Charging Pump starts per hour and require a minimum of 5 minutes between starts.
- The upper head region may void during RCS depressurization. This will result in a rapidly increasing PZR level.

* 5.	Maintain PZR Level Between 20% And 70% At The Charging Pump Room Panel As Follows:	
	a. Check PZR level - LESS THAN 70%	a. Decrease PZR level to less than 70% by performing the following: • Stop all Charging Pumps. OR • Continue to cooldown to shrink RCS inventory.
	b. Check PZR level - GREATER THAN 20%	b. Start CHARGING PUMP A.
* 6.	Check RWST Level On LIC-947 - GREATER THAN 50%	Notify SSO to contact the TSC to determine RWST makeup options.
* 7.	Check CST Level - LESS THAN 10%	WHEN CST level decreases to less than 10%, THEN perform Step 8. Observe the NOTE prior to Step 9 and Go To Step 9.

Question: 63

Given the following conditions:

- A natural circulation cooldown is in progress following a loss of offsite power and a fire in the south cable vault.
- RCS Pressure is being reduced with porvs to 1200 psig when PZR level rapidly increases from 25% to 78%.

The likely cause of this level increase is ...

a. steam void formation in the RX vessel head.

b. S/G PORV's failing shut with resulting heatup causing RCS liquid expansion.

c. increased charging flow.

d. swell of PZR liquid due to opening of the PZR PORVs to lower RCS pressure.

Answer:

a. steam void formation in the RX vessel head.

not plausible replace c

QUESTION NUMBER: 63
TIER/GROUP: 1/1

K/A: 055EK1.02
Knowledge of the operational implications of the following concepts as they apply to the Station Blackout: Natural circulation cooling

K/A IMPORTANCE: RO 4.1

10CFR55 CONTENT: 55.41(b) RO 5

OBJECTIVE: DSP-007-03
Demonstrate an understanding of selected steps, cautions, and notes in DSP-007 by explaining the basis of each.

REFERENCES: DSP-007

SOURCE: New Significantly Modified Modified/Direct **X**

Bank Number DSP-007-03 001

JUSTIFICATION:

a. **CORRECT** Rapidly reducing RCS pressure without removing heat from the vessel head due to no flow in the area on natural circulation will result in the formation of voids in the head region. This will cause a rapid influx of water into the pressurizer.

b. Plausible since a heatup will result in liquid expansion. Magnitude of expansion is significantly less than identified change in level.

c. Plausible since increased charging will result in rising level. Capacity of charging pumps not capable of causing this rapid change in level.

d. Plausible since swell occurs in the SG which is also a saturated system. Swell is a phenomena limited to the SGs due to recirculation flow. Although density decreases in the PZR as pressure lowers, the volume change does not approach this extreme.

DIFFICULTY:
Comprehensive/Analysis **X** Memory Rating 3

Comprehension of relative temperatures of head versus saturation conditions in the RCS.

REFERENCES SUPPLIED: NONE

Question: 64

With only ONE (1) Main Feedwater Pump and TWO (2) Condensate Pumps in service, AOP-010, "Main Feedwater/Condensate Malfunctions", limit operations to a MAXIMUM ...

FST RP CHP

a. ~~First Stage Turbine~~ Pressure of 400 psig.

b. Reactor Power level of 50%.

c. Reactor Power level of ~~60%~~ 80.

d. ~~Condensate Header Pressure~~ of 560 psig.

AOP 10 STEP 5 SP 80%.

Answer:

c. Reactor Power level of 60%.

b is correct since < 60%

ACCEPT A & B

QUESTION NUMBER: 64
TIER/GROUP: 2/1

K/A: 059A1.03
Ability to predict and/or monitor changes in parameters (to prevent exceeding design limits) associated with operating the MFW controls including: Power level restrictions for operation of MFW pumps and valves.

K/A IMPORTANCE: RO 2.7

10CFR55 CONTENT: 55.41(b) RO 4

OBJECTIVE: AOP-010-03
Demonstrate an understanding of selected steps, cautions, and notes in AOP-010 by explaining the basis of each.

REFERENCES: AOP-010

SOURCE: New Significantly Modified Modified/Direct **X**

Bank Number AOP-010-03 009

JUSTIFICATION:

a. Plausible since this is equivalent to a maximum power level as measured on the secondary side. Pressure is equivalent to nearly 90% power.
b. Plausible since this is 1/2 of the normal full power flow. Combination can sustain up to 60% power.
c. **CORRECT** Capacity of this combination is 60% power.
d. Plausible since this parameter is used in the GPs for a condition to go to single train operation. AOP limitation based on load.

DIFFICULTY:
Comprehensive/Analysis Memory **X** Rating 2

Knowledge of feed and condensate limitations.

REFERENCES SUPPLIED: NONE

STEP	INSTRUCTIONS	RESPONSE NOT OBTAINED
4.	Go To The Appropriate Step from The Table Below:	

EVENT	STEP
Main Feed Pump Trip	Step 5
Condensate AND Feed Pump Trip	Step 9
Condensate Pump Trip Without MFP Trip	Step 45
Heater Drain Pump Trip	Step 14
Pipe Break / Leak	Step 20
Other	Step 23

5.	Check Reactor Power - LESS THAN 80%	Trip the Reactor and Go To Path-1.
6.	Check Reactor Power - GREATER THAN 60%	Go To Step 12.
7.	Reduce Turbine Load At 1%/MIN To 5%/MIN To Achieve Less Than 60% Reactor Power	
8.	Go To Step 12	
9.	Check Reactor Power - LESS THAN 70%	Trip the Reactor and Go To Path-1.
10.	Check Reactor Power - GREATER THAN 50%	Go To Step 12.
11.	Reduce Turbine Load At 1%/MIN To 5%/MIN To Achieve Less Than 50% Reactor Power	

BASIS DOCUMENT, MAIN FEEDWATER/CONDENSATE MALFUNCTION

INDIVIDUAL STEP DESCRIPTION:

Step	Description
1	This step is placed early in the procedure to address a malfunction of the automatic control circuitry. Early action to match steam and feed flows will stabilize S/G levels to allow diagnosis of the failure. Load changes are stopped to aid the operator in maintaining level control. If FRV or FRV Bypass valve failures will not allow the operator to obtain control, then the plant is tripped. This step is an immediate action step.
2-3	These steps trip the reactor should a reactor trip setpoint be approached. This is a continuous action step so that should it become apparent to the operator that the event is not survivable or that a trip is imminent, a manual trip should be performed.
4	This step provides transitional guidance to the operator based on the event causing entry to the procedure. This procedure is designed to mitigate Feedwater Transients resulting from numerous possible causes. Transitioning via a table has been shown to be more efficient and simpler to use rather than numerous transitions within the procedure. This will improve the human factors of the procedure by reducing the total transitions required.
5-8	These steps are reached if a Main Feedwater Pump trip has occurred. First power is checked between (and including) 60% to 80%. If power is greater than 80% the reactor will be tripped. 80% is chosen based on Management discretion for conservative decision making. Larger power reductions require more rapid maneuvering and may challenge the primary side PORVs. If power is below 60% no power reduction will be required. For power levels greater than 60% power will be reduced at rate chosen by the CRSS, between 1% and 5% per minute. The closer the plant is to 60%, the lower the rate necessary to match steam and feed flow. 5% per minute is the maximum normal maneuvering rate of the plant. If a power reduction is required at rates above this value, the reactor should be tripped.
9-11	These steps are reached if both a Condensate Pump and a Main Feed Pump have tripped. This is the most severe of the transients. These steps are the same as for a Main Feed Pump trip, with the exception that the target power levels are 70% and 50% due to the more severe transient.

Question: 65

Given the following conditions:

- The plant is operating at 60% power.
- Rod control is in AUTO.
- RCS boron concentration is 150 ppm
- Control rod H-6 drops and is sensed by Power Range NI N-42 only.

Assuming **NO** operator actions, Which ONE (1) of the following describes the effect on the plant?

a. Tave increases due to a dropped rod turbine runback, but rods **CANNOT** respond in AUTO

b. Tave increases due to a dropped rod turbine runback, and rods step inward

c. Tave decreases due to a dropped rod with **NO** turbine runback, but rods **CANNOT** respond in AUTO

d. Tave decreases due to a dropped rod with **NO** turbine runback, and rods step outward

Answer:

b. Tave increases due to a dropped rod turbine runback, and rods step inward

QUESTION NUMBER: 65
TIER/GROUP: 3

K/A: 2.2.34
Knowledge of the process for determining the internal and external effects on core reactivity.

K/A IMPORTANCE: RO 2.8

10CFR55 CONTENT: 55.41(b) RO 6

OBJECTIVE: MCD-01-03
Describe changes in core conditions that change core reactivity, including: boron concentration, control rod position, Fission-product poisons, fuel temperature and moderator temperature

REFERENCES: SD-011
SD-010

SOURCE: New Significantly Modified **X** Modified/Direct

Bank Number AOP-001-10 001

JUSTIFICATION:

a. Plausible since a runback does occur. Rods are capable of stepping inward in AUTO.

b. **CORRECT** 1/4 NIS channels sensing a dropped rod causes a turbine load reference runback of approximately 30%. Temperature will rise and rods will step inward in AUTO to restore temperature.

c. Plausible since most NIS coincidences are 2/4, turbine limit runbacks do not occur below 70% power, and temperature would lower if no runback were to occur. A runback does occur and rods respond by stepping inward.

d. Plausible since most NIS coincidences are 2/4, turbine limit runbacks do not occur below 70% power, and temperature would lower if no runback were to occur. A runback does occur and rods respond by stepping inward.

DIFFICULTY:
Comprehensive/Analysis **X** Memory Rating 3

Comprehension of rod drop circuitry and plant response to runback.

REFERENCES SUPPLIED: NONE

RPS-FIGURE-15 (Rev . 0)

TURBINE LOAD REFERENCE REDUCTIONS

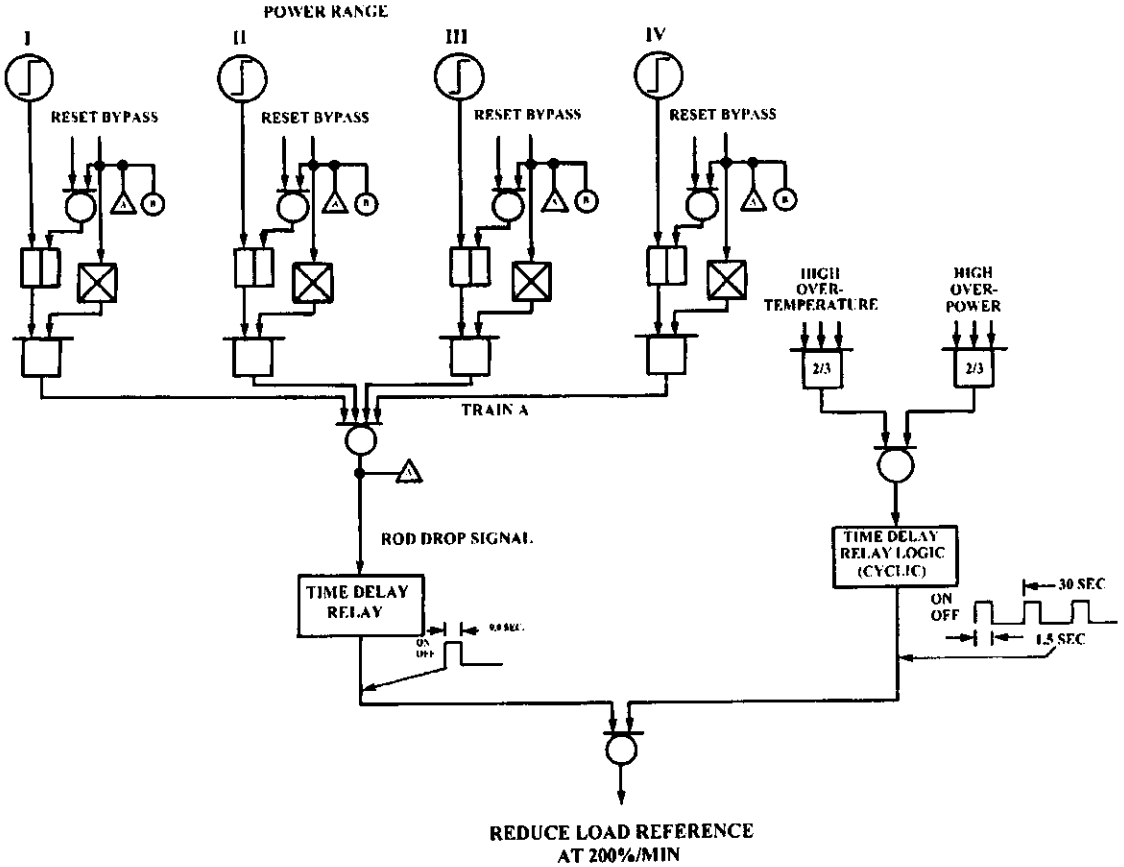

1. Rod Bottom Signal (Rod Position Indication)

2. 1 out of 4 Power Range Channels Rod Drop Signal

A Manual Rod Withdrawal is blocked by:

a. 1 out of 4 Power Range Channels above 103%, this block can be bypassed.

b. 1 out of 2 Intermediate Range Channels above 20%, this block can be bypassed.

c. 2 out of 3 OTΔT's above calculated setpoint, this calculated setpoint is less than the OTΔT Trip.

d. 2 out of 3 OPΔT's above calculated setpoint, this calculated setpoint is less than the OPΔT Trip.

4.4 Turbine Runbacks

The Turbine Runbacks are designed to reduce Reactor Load and thus avoid an unnecessary trip. The Turbine Runbacks are caused by Rod Drop Signals or High ΔT Signals and are initiated by either a Load Reference Reduction or a Load Limit Reduction.

4.4.1 Load Reference Reduction (Figure 15)

The Load Reference Reduction is caused when any of the following occur:

a. Rod Drop Signal (NIS) - when 1 out of 4 Power Range Channels senses a 5% negative change in 5 seconds. This causes the Turbine to reduce load at the rate of 200%/minute for a duration of 9 seconds (this equals a 30% Load Reduction). The Power Range Channel that caused the runback is reset or bypassed at it's respective Power Range "A" Drawer and has to be reset or bypassed before another runback can occur.

b. OTΔT - when 2 out of 3 Reactor Coolant Loop ΔT's (Th - Tc) exceeds the calculated setpoint. This causes a cyclic reduction in Turbine Load at the rate of 200%/minute. The cyclic duration is that of a 1.5 second runback (which equates to 5% Load Reduction) and a 28.5 second wait, if OTΔT condition still exists, the 1.5 second runback and the 28.5 second wait repeats. This cyclic reduction continues until the OTΔT condition is corrected.

INFORMATION USE ONLY

500 μa, 1 mA, and 5 mAdc. The switch selects shunt resistors for the meter, but never interrupts the ion-chamber signal to the PR channel. The circuit is so designed that a failure of the meter or switch will not interrupt the signal to the total power circuitry.

The individual currents are displayed on the two front panel detector current meters and are then sent to separate isolation amplifiers. There are two isolation amplifiers monitoring each of the two detector current signals. Two of the isolation amplifiers (used as impedance matching networks), one monitoring each of the currents, supply signals to the ΔT trips in channels 41, 42, & 43. The other two isolation amplifiers provide outputs for the remote recorders (NR-41, NR-42, NR-43, or NR-44), remote meters (NI-41C, NI-42C, NI-43C, or NI-44C), the Detector Current Comparator drawer, and the computer. The individual current signals are then sent to a summing amplifier module which transmits a linear 0-10 Vdc signal proportional to their sum and provides total power. The summing amplifier has three controls: one a ZERO ADJUST located on the module itself, a "coarse" GAIN ADJUST inside the drawer and a "fine" GAIN ADJUST with a calibrated dial located on the drawer's front panel. The output signal from this unit corresponds to 0 to 120 percent of full power and is displayed on a percent full power meter on the front panel of the PR A drawer. This same signal is delivered directly to three isolation amplifiers, a dropped rod sensing assembly, and five bistable relay driver modules. These isolation amplifiers are identical to those previously described and the outputs are the same in number and range, but are used in different functions. (Specific outputs from the amplifiers are discussed in the auxiliary equipment section which follows.)

The dropped-rod sensor assembly is an operational amplifier unit which incorporates an adjustable lag network at one input and a nondelayed signal on the other. The unit compares the actual power signal with the delayed power signal received through the lag network and amplifies the difference. This amplified differential signal is delivered to a bistable relay driver unit which trips when the level of this signal exceeds a preset amount. Tripping of this unit indicates a power level change over the lag period (5 seconds) of 5% power. This bistable unit is a latching type, ensuring that the necessary action will be initiated and carried to completion. Specifically, the unit controls relays which in a one of four logic matrix, provide a rod stop and turbine run-back signal, a control board annunciation signal (APP-005-A3), and a computer input signal. A reset switch on the associated PR A drawer must be operated manually to reset the rod stop and turbine runback functions. The bistable units which sense the power level signal as derived by the linear amplifier are nonlatching and perform the following functions:

- overpower rod stop (blocks automatic and manual rod withdrawal);
- permissive functions (provisions for three are incorporated in the design, but are not required on all plants;
- low range reactor trip;
- high range reactor trip.

INFORMATION USE ONLY

AOP-001-10 001
Given the following plant conditions:

- The plant is operating at power with all systems operating normally
- Rod control is in manual and RCS boron is 450 ppm
- Control rod H-6 drops but the reactor does not trip and the turbine does not runback

Which ONE (1) of the following would be the effect on the plant?

A. Tave will increase to compensate for the dropped rod's negative reactivity

B. Tave will increase to compensate for the dropped rod's positive reactivity

✓C. Tave will decrease to compensate for the dropped rod's negative reactivity

D. Tave will decrease to compensate for the dropped rod's positive reactivity

Question: 66

Given the following plant conditions:

- Ten (10) hours ago, 2 rods in SD Bank "A" dropped into the core.
- The Reactor was manually tripped.
- Repairs to SD Bank "A" are expected to be completed in four (4) hours.
- Estimated Critical Condition RCS boron concentration is 770 ppm.
- Mode 3 SDM is 890 ppm boron.
- Present RCS boron concentration is 830 ppm.

Which ONE (1) of the following describes the actions required for the given conditions?

a. Dilute to 770 ppm with all rods inserted

b. Dilute to 770 ppm and withdraw SD Bank "B"

c. Maintain 830 ppm and withdraw SD Bank "B"

d. Borate to 890 ppm with all rods inserted

Answer:

d. Borate to 890 ppm with all rods inserted

QUESTION NUMBER: 66
TIER/GROUP: 2/1

K/A: 001K5.72
Knowledge of the following operational implications as they apply to the CRDS: Reactivity balance (shutdown withdrawal precedes dilution)

K/A IMPORTANCE: RO 3.1

10CFR55 CONTENT: 55.41(b) RO 6

OBJECTIVE: GP-003-08
Given plant conditions, evaluate the appropriate actions to mitigate consequences of events as directed by steps in GP-003.

REFERENCES: GP-003
GP-004

SOURCE: New Significantly Modified **X** Modified/Direct

Bank Number GP-004-03 001

JUSTIFICATION:

a. Plausible since SD bank 'A' cannot be withdrawn and ECC boron is at this value. Requirement is to borate to Mode 3 and withdraw SD bank 'A' rods if not going critical within 12 hours of trip.

b. Plausible since SD bank 'A' cannot be withdrawn, withdrawing 'B' provides negative reactivity insertion capability, and ECC boron is at this value. Requirement is to borate to Mode 3 and withdraw SD bank 'A' rods if not going critical within 12 hours of trip.

c. Plausible since SD bank 'A' cannot be withdrawn and withdrawing 'B' provides negative reactivity insertion capability, Requirement is to borate to Mode 3 and withdraw SD bank 'A' rods if not going critical within 12 hours of trip.

d. **CORRECT** Required to be at Mode 3 SDM if not going to be critical again within 12 hours and only SDB 'A' rods are to be withdrawn. Since SD bank 'A' rods cannot be withdrawn, no rods are withdrawn.

DIFFICULTY:
Comprehensive/Analysis **X** Memory Rating 4

Comparison of current and predicted plant conditions to knowledge of procedural requirements.

REFERENCES SUPPLIED: NONE

5.8.3 Shutdown Bank "A" shall be at the fully withdrawn position whenever reactivity is being changed by Boron or Xenon changes, RCS temperature changes, or Control Rods, other than Shutdown Bank "A". The following exceptions to this rule may be applied:

NOTE: The COLR identifies the required Shutdown Margin (SDM) based on plant conditions. The required Boron Concentration can be determined using Powertrax or the Plant Curve Book using the SDM identified in the COLR.

1. The RCS has been borated and confirmed by sampling, to be at least at the Boron Concentration needed to provide the required SDM for MODE 3 and is being maintained at MODE 3. Approval of the Manager - Operations, or his designated alternate, shall be given for Shutdown Bank "A" to be inserted.

2. The RCS has been borated and confirmed by sampling, to be at least at the Boron Concentration needed to provide the required SDM for MODE 5. Approval of the Manager - Operations, or his designated alternate, shall be given for Shutdown Bank "A" to be inserted.

5.8.4 **IF** Shutdown Bank "A" cannot be withdrawn, **THEN** the RCS shall be borated as required IAW Step 5.8.3.

5.9 Precautions During Approach to Critical:

5.9.1 Startup Rate shall **NOT** be permitted to exceed 1.0 decade/minute as read on the STARTUP RATE METER.

5.9.2 An Inverse Count Rate Ratio Plot (I/M) with a minimum of four data points (including baseline data point which is taken after Shutdown Banks "A" and "B" are fully withdrawn) shall accompany the Reactor startup.

5.9.3 The Reactor Operator may shutdown the Reactor if the predicted critical rod position from the 1/M plot falls outside the +/-500 pcm positions. (Project 97-00161)

5.10 Whenever possible, the Steam Dump Valves should be used for temperature control instead of Steam Line PORVs.

3.0 RESPONSIBILITIES

N/A

4.0 PREREQUISITES

4.1 The EOP Network has been exited

5.0 PRECAUTIONS AND LIMITATIONS

5.1 The shutdown margin existing at the time the Reactor is shutdown shall not be reduced during the subsequent Xenon transient. This margin is determined by the Boron concentration and withdrawn rods which can be tripped. Positive reactivity addition due to Xenon decay occurs approximately 12 hours after shutdown.

5.2 Shutdown Bank "A" shall be at the fully withdrawn position whenever reactivity is being changed by Boron or Xenon changes, RCS temperature changes, or Control Rods, other than Shutdown Bank "A". The following exceptions to this rule may be applied:

NOTE: The COLR identifies the required Shutdown Margin (SDM) based on plant conditions. The required Boron Concentration can be determined using Powertrax or the Plant Curve Book using the SDM identified in the COLR.

5.2.1 The RCS has been borated and confirmed by sampling, to be at least at the Boron Concentration needed to provide the required SDM for MODE 3 and is being maintained at MODE 3. Approval of the Manager - Operations, or his designated alternate, shall be given for Shutdown Bank "A" to be inserted.

5.2.2 The RCS has been borated and confirmed by sampling, to be at least at the Boron Concentration needed to provide the required SDM for MODE 5. Approval of the Manager - Operations, or his designated alternate, shall be given for Shutdown Bank "A" to be inserted.

5.2.3 If Shutdown Bank "A" cannot be withdrawn, the RCS shall be borated as required IAW 5.2.1 or 5.2.2.

5.3 Following a significant (10 ppm or more) change in RCS Boron concentration, additional PZR heaters should be energized. This will permit opening of the PZR spray valves and allow the Boron concentration between the PZR and the RCS loops to equalize.

INIT

8.34 Perform Attachment 10.1 to reset the SR HI FLUX AT SHUTDOWN Alarm. ____

8.35 Monitor the neutron flux level **AND** count rate as the Xenon transient progresses to verify that core flux multiplication does not result in criticality. ____

NOTE: If the count rate on either Source Range channel increases by a factor of two or more during any step involving a Boron concentration change, the operation shall be stopped immediately and suspended until a satisfactory evaluation of the situation has been made.

The COLR identifies the required Shutdown Margin (SDM) based on plant conditions. The required Boron Concentration can be determined using Powertrax or the Plant Curve Book using the SDM identified in the COLR.

The following step is performed to ensure the plant remains in MODE 3 after Xenon decay.

8.36 **IF** the time to return to critical is in excess of 12 hours **AND** a plant cooldown is **NOT** required, **THEN** borate the RCS to achieve a Boron Concentration which is greater than or equal to the Boron Concentration needed to provide the required SDM for MODE 3 with Shutdown Bank "A" fully withdrawn. ____

NOTE: The slide switches for enabling/disabling the print function of points on NR-53, EXCORE NIS RECORDER, are located on the rear of the recorder chassis.

8.37 Enable the print function of the following points on NR-53, EXCORE NIS RECORDER, by removing the related slide switches from the BYPASS position. (ACR 93-329)

- PT. 1 CH I SR CPS (slide switch #1) ____
- PT. 3 CH II SR CPS (slide switch #3) ____

8.38 Initiate makeup to the CST, as required, to maintain level greater than 50%. ____

8.39 Place the desired number of Condensate Polisher Beds in service using OP-501. ____

8.40 Verify the MSC DRAIN COLLECTING TANK level is normal. ____

8.41 Verify the Bowser Filter Unit is operating correctly. ____

GP-004-03 001
Given the following plant conditions:

- Mode 3, after a trip that occurred 5 hours ago
- Pre-startup preparations are in progress, criticality scheduled for 8 hours from now
- Reactor trip breakers are open
- An Estimated Critical Condition has been prepared for the startup
- ECC RCS boron is 670 ppm
- Mode 3 SDM is 720 ppm
- Present RCS boron concentration is 680 ppm

Which ONE (1) of the following describes the required action to take to adjust RCS boron concentration?

A. Borate to 720 ppm, then withdraw SD Bank "A"

√ B. Withdraw SD Bank "A", then borate to 720 ppm

C. Dilute to 670 ppm, then withdraw SD Bank "A"

D. Withdraw SD Bank "A" then dilute to 670 ppm

Question: 67

Given the following conditions:

- A large steam break has occurred inside containment.
- Phase A and Phase B isolation signals have occurred.
- Pressurizer Relief Tank level and pressure are increasing.

Which ONE (1) of the following relief valves could cause these changes in the PRT under these conditions?

a. CVC-382, RCP Seal Return Relief

b. CVC-203A, Letdown Line Relief

c. CC-722A, RCP "A" Thermal Barrier HX CCW Discharge Relief

d. SI-858A, SI Accumulator "A" Relief

Answer:

a. CVC-382, RCP Seal Return Relief

QUESTION NUMBER: 67
TIER/GROUP: 2/3

K/A: 007A3.01
Ability to monitor automatic operation of the PRTS, including: Components which discharge to the PRT

K/A IMPORTANCE: RO 2.7

10CFR55 CONTENT: 55.41(b) RO 6

OBJECTIVE: PZR-14
Explain the effect on the PZR and PRT System due to selected failures.

REFERENCES: SD-006
APP-003-03

SOURCE: New Significantly Modified **X** Modified/Direct

Bank Number PZR-03 004

JUSTIFICATION:

a. **CORRECT** A Phase B signal will cause seal return to the VCT to isolate. This will result in CVC-382 lifting, causing PRT level and pressure to rise.

b. Plausible since relief lifts to PRT. Phase A isolation closes the RCS path to this relief so no pressure will be sensed at the relief and it will not lift.

c. Plausible since this relief is designed to relief RCS pressure due to a failed CCW thermal barrier HX. Relief goes to containment sump.

d. Plausible since this relief is designed to relief pressure caused by RCS inleakage. Relief goes to containment sump.

DIFFICULTY:
Comprehensive/Analysis **X** Memory Rating 3

Analysis of plant conditions following Phase A and B signals to determine relief paths.

REFERENCES SUPPLIED: NONE

ALARM

PRT HI PRESS

AUTOMATIC ACTIONS

1. Not Applicable

CAUSE

1. In leakage from Makeup Water, Pressurizer Relief Valves, Pressurizer Safety Valves, RHR Loop Relief Valves, Letdown Relief Valves, Seal Water Return Relief Valve, SI Test Line Relief Valve, or SI Cold Leg Injection Header Relief Valve
2. Failure of N_2 Supply to PRT
3. Opening of Pressurizer Safety or PORV

OBSERVATIONS

1. PRT Level (LI-470)
2. PRT Pressure (PI-472)
3. PRT Temperature (TI-471)
4. Pressurizer Safety Valve Line Temperatures (TI-465, TI-467, TI-469)
5. PORV Discharge Line Temperature (TI-463)

ACTIONS

1. **IF** a PZR PORV or Safety fails open while greater than 350°F, **THEN** Refer To Path-1.
2. **IF** pressure is high, **THEN** vent the PRT as follows:
   1) Open RC-549, PRT VENT
   2) **IF** required, **THEN** verify a Waste Gas Compressor starts.
   3) **WHEN** pressure is less than 3 psig, **THEN** close RC-549.
3. **IF** necessary, **THEN** adjust Nitrogen Regulator to PRT.
4. **IF** necessary, **THEN** drain the PRT using OP-103.

DEVICE/SETPOINTS

1. PC-472 / 5 psig

POSSIBLE PLANT EFFECTS

1. PRT Rupture Disk failure at 100 psig

REFERENCES

1. Path-1, EOP Network
2. CWD B-190628, Sheet 461, Cable P
3. OP-103, Pressurizer Relief Tank Control System

ATTACHMENT 10.2
Page 1 of 1

ESF PHASE B ISOLATION SIGNAL VALVE OPERATION

The following Valves CLOSE:

CC-716A & B RCP Cooling Water Inlet Isolation
FCV-626 RCP Thermal Barrier Flow Control
CC-735 RCP Thermal Barrier Outlet Isolation
CVC -381 RCP Seal Water Return Isolation
CC-730 RCP Oil Coolers Outlet Isolation
Steamline Isolation (for Auto Containment Phase B Isolation only)
Containment Ventilation Isolation (for manual initiation of Containment Phase B Isolation only)

INFORMATION USE ONLY

PZR-03 004
Which ONE (1) of the following does NOT discharge to the Pressurizer Relief Tank?

A. RCP Seal Return Relief (CVC-382)

B. Letdown Orifice Outlet Reliefs (CVC-203A & B)

✓C. RCP Thermal Barrier Heat Exchanger CCW Discharge Reliefs (CC-722 A, B, & C)

D. Residual Heat Removal Pump Discharge Relief (RHR-706)

C is correct, flow diagram 5379-1971 sheet 2 of 2
CVC-203A/B, CVC-382, SI 857B, SI-859, and RHR-706 relieve to the PRT

Question: 68

Given the following conditions AND the attached ERFIS trend for RCS Pressure:

- A Reactor Trip and Safety Injection have occurred.
- As directed by PATH-1, a transition has been made to EPP-8, "Post LOCA Cooldown and Depressurization."
- One (1) RCP is running.
- Two (2) Charging Pumps are running.
- One (1) SI Pump is running.
- Both RHR Pumps were secured at 13:04.
- RCS Temperature is 300 °F.
- RCS Subcooling is 109 °F.
- Required subcooling is 158 °F.

Which ONE (1) of the following actions should be taken, in accordance with EPP-8?

a. Start the RHR Pumps

b. Start the third Charging Pump

c. Energize Pressurizer Heaters

d. Stop the SI Pump

Answer:

a. Start the RHR Pumps

NRC RO RETAKE-INITIAL LICENSE WRITTEN EXAMINATION

THIS PLOT TO BE USED WITH QUESTION # 68

SELECT FUNC. KEY OR TURN-ON CODE QP :

MAR 24, 2000
13:06:44

EDS HOST

TEMPLATE | PLOT LIBRARY | GROUP LIBRARY | REPORT | 35 HOURS | 210 DAYS

TREND DISPLAY PZRPRES (MIN/MAX) CURSOR DATE: 03/24/00
CURSOR TIME: 13:04:44

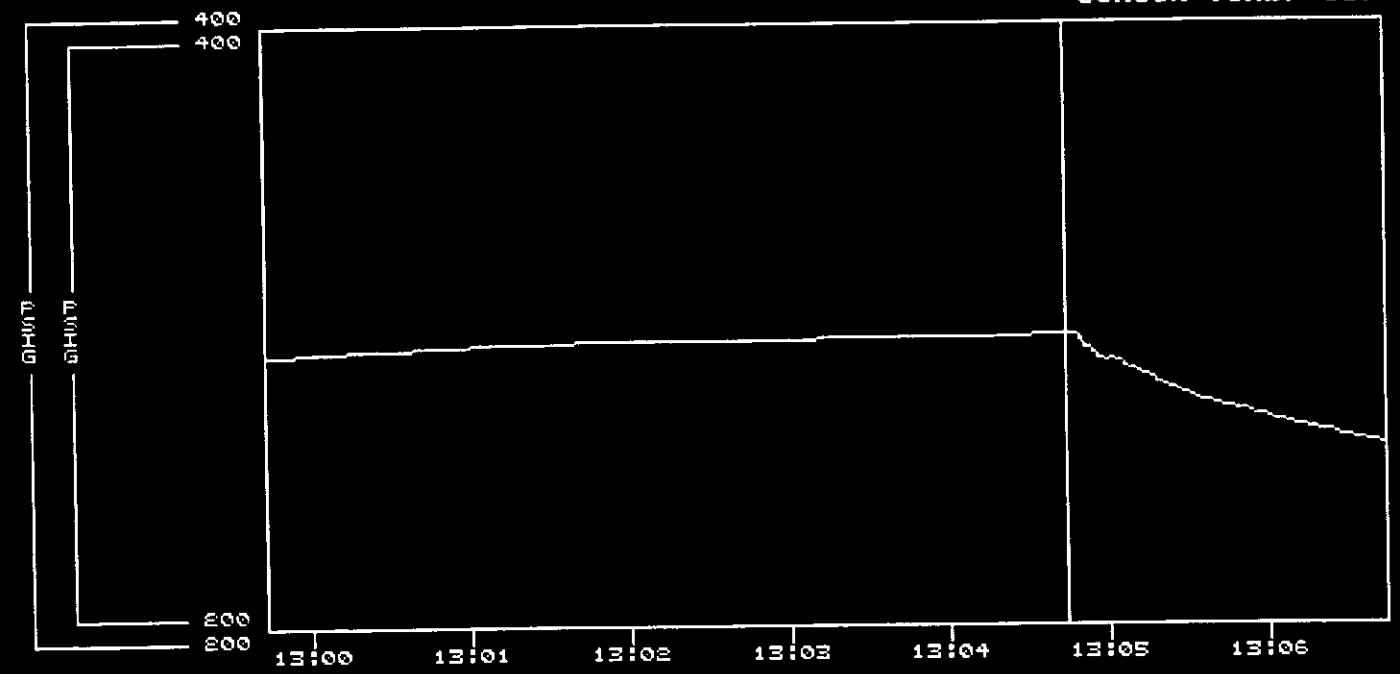

POINT ID	DESCRIPTION	TREND LINE	CURRENT VALUE	QUAL	LOW ALARM	HIGH ALARM
RCP0493A	PT-500 PRESSURIZER PRESSURE	2[illegible]	259	OK	0	3000
RCP0494A	PT-501 PRESSURIZER PRESSURE	2[illegible]	259	OK	0	3000

F1=FAST LEFT PREV CANC F2=LEFT F3=MENU ERDS=OFFLINE F4=TEMPLATE CONSOLE=NORMAL F5=RIGHT PLANT MODE=4 F6=FAST RIGHT

QUESTION NUMBER: 68
TIER/GROUP: 1/2

~~K/A: WE03G2.1.19~~
Ability to use plant computer to obtain and evaluate parametric information on system or component status. (LOCA Cooldown/Depressurization)

K/A IMPORTANCE: RO 3.0

10CFR55 CONTENT: 55.41(b) RO 10

OBJECTIVE: EPP-008-08
Given plant conditions, evaluate the appropriate actions to mitigate events related to Post LOCA Cooldown and Depressurization as directed in EPP-8.

REFERENCES: EPP-8

SOURCE: New Significantly Modified **X** Modified/Direct

Bank Number EPP-008-06 001

JUSTIFICATION:

a. **CORRECT** RHR pumps are required to be started since RCS pressure has dropped below 275 psig.

b. Plausible since required subcooling to stop the SI pump does not exist. Pump is not required to be started, but RHR pumps are required.

c. Plausible since RCS pressure is low and energizing heaters will raise pressure. RHR pumps are to be started.

d. Plausible since SI pump stop conditions are all met with the exception of subcooling. Pump should not be stopped, but RHR pumps should be started.

DIFFICULTY:
Comprehensive/Analysis **X** Memory Rating 4

Analysis of plant conditions to determine required actions due to low RCS pressure.

REFERENCES SUPPLIED: NONE

STEP	INSTRUCTIONS	RESPONSE NOT OBTAINED
1.	Open Foldout B	
* 2.	Determine If RHR Pumps Should Be Stopped:	
	a. Check RCS pressure: • GREATER THAN 275 PSIG [400 PSIG] **AND** • STABLE OR INCREASING	a. Go To Step 3.
	b. Stop RHR PUMPs	
	c. Check RCS pressure - LESS THAN 275 PSIG [400 PSIG]	c. IF RCS pressure decreases below 275 psig [400 psig] during this procedure, THEN restart RHR Pumps. Go To Step 3.
	d. Restart the RHR Pumps	
* 3.	Check Emergency Busses - ANY ENERGIZED BY EMERGENCY DIESEL	Go To Step 6.

STEP	INSTRUCTIONS	RESPONSE NOT OBTAINED

NOTE

- The table values below are based on stable conditions.
- If RCS pressure is continuing to decrease slowly due to RCS temperature reduction, as long as subcooling is increasing, the values may be considered stable.

28. Determine If One SI Pump Should Be Stopped:

a. Check SI Pumps - ANY RUNNING — a. Go To Step 29.

b. Determine required RCS subcooling from table:

CHARGING PUMP STATUS	ANY RCP RUNNING		NO RCP RUNNING	
	ONE SI PUMP RUNNING	TWO SI PUMPS RUNNING	ONE SI PUMP RUNNING	TWO SI PUMPS RUNNING
NONE RUNNING	Do NOT stop SI pump	72°F [99°F]	Do NOT stop SI pump	80°F [104°F]
ONE RUNNING	197°F [221°F]	68°F [95°F]	195°F [220°F]	76°F [100°F]
TWO RUNNING	176°F [203°F]	65°F [91°F]	179°F [205°F]	73°F [96°F]
THREE RUNNING	158°F [187°F]	62°F [88°F]	165°F [191°F]	70°F [93°F]

c. Check RCS subcooling - LESS THAN REQUIRED SUBCOOLING — c. Go To Step 28.f.

d. Check RCS hot leg temperatures - LESS THAN 320°F [300°F] — d. Go To Step 31.

e. Verify RHR Pumps - AT LEAST ONE RUNNING — e. Go To Step 31.

(CONTINUED NEXT PAGE)

EPP-008-06 001

Given the following plant conditions:

- A Reactor Trip and Safety Injection have occurred
- As directed by PATH-1, you have transitioned to EPP-8, "Post LOCA Cooldown and Depressurization"
- Two SI Pumps are running
- Both RHR Pumps have been secured
- The crew has reached the step for SI pump reduction

Which ONE (1) of the following describes two conditions, that if both are met, allow you to secure an SI pump?

✓A. RCS Subcooling greater than required and adequate PZR level

B. RCS Subcooling greater than required and at least one Charging pump running

C. RCS Hot Leg temperatures low enough and adequate PZR level

D. RCS Hot Leg temperatures low enough and at least one Charging pump running

Question: 69

Which ONE (1) of the following describes how protection channels are separated from control channels?

a. Separate transmitters are always used for control and protection signals

b. An isolation amplifier is used to prevent signal interaction when a single transmitter provides control and protection functions

c. Separate cable runs from the transmitters are used to prevent signal interaction when a single transmitter provides control and protection functions

d. A selector switch is used to prevent signal interaction when a single transmitter provides control and protection functions

Answer:

b. An isolation amplifier is used to prevent signal interaction when a single transmitter provides control and protection functions

QUESTION NUMBER: 69
TIER/GROUP: 2/2

K/A: 016K5.01
Knowledge of the operational implication of the following concepts as they apply to the NNIS: Separation of control and protection circuits

K/A IMPORTANCE: RO 2.7

10CFR55 CONTENT: 55.41(b) RO 7

OBJECTIVE: RPS-04
Describe the purpose of the major components of the RPS System.

REFERENCES: SD-011

SOURCE: New Significantly Modified **X** Modified/Direct

Bank Number RPS-09 011

JUSTIFICATION:

a. Plausible since separate transmitters are used for certain functions. Not all functions use separate transmitters.

b. **CORRECT** Isolation amplifiers are used to separate control and protection functions so a control failure does not affect protection functions.

c. Plausible since this is how separation between trains of protection is maintained. Not all functions use separate transmitters.

d. Plausible since this would allow a single transmitter to be used for either control or protection. Not in plant design.

DIFFICULTY:
Comprehensive/Analysis Memory **X** Rating 2

Knowledge of method for separating control and protection channels.

REFERENCES SUPPLIED: NONE

the reactor protection.

2. When a trip circuit is being tested or maintenance is being performed, the channel is placed in a tripped mode, thus a 3 out of 4 logic matrix becomes a 2 out of 3 and a 2 out of 3 becomes a 1 out of 2.

Turbine Runbacks are provided to reduce power and avoid an unnecessary Reactor Trip.

3.0 COMPONENT DESCRIPTION

3.1 Analog Protection Channels (Figure 2)

The 4 Analog Protection Channels receive and process signals from various nuclear and non-nuclear parameters. Each Analog Protection Channel is color coded for clear identification (Channel 1 is Red, Channel 2 is White, Channel 3 is Blue and Channel 4 is Yellow).

An Analog Protection Channel consists of a combination of individual loops consisting of:

a. A Loop Power Supply to provide a source of current for the Signal Input Loop

b. An Isolation Amplifier to separate the protection portion of the loop from the information portion and to prevent signal interactions and eliminate ground loops.

c. Protection Bistables to provide signals to the Logic Channels at calibrated setpoints.

d. Lead-Lag Networks, where necessary, to generate an output proportional to the input plus the rate of change of the input

Each Analog Protection Channel contains a Test Panel which consists of:

a. Test - Operate Switches

b. Input Signal Jacks

c. Test Point Jacks

d. Bistable Trip Switches

INFORMATION USE ONLY

RPS-09 011

Which ONE (1) of the following is correct concerning a protection channel?

A. A loop power supply provides a source of current for that protection channel.

~~B. An isolation amplifier is provided to prevent signal interaction.~~

C. Protection bistables provide signals to the trip breakers.

D. Lead-lag networks generate output indirectly proportional to the input.

Question: 70

Given the following conditions:

- A Loss of Offsite Power has occurred.
- EPP-1, "Loss of All AC Power," has been entered due to neither EDG running.
- The operator depresses the Safety Injection push buttons and EDG 'A' starts and closes on the bus.

After completion of the bus loading, what is the expected status of the following pumps?

	CHARGING PUMP 'B'	**SAFETY INJECTION PUMP 'A'**
a.	OFF	ON
b.	OFF	OFF
c.	ON	ON
d.	ON	OFF

Answer:

a.	OFF	ON

QUESTION NUMBER: 70
TIER/GROUP: 1/1

K/A: 055EA1.02
Ability to operate and monitor the following as they apply to a Station Blackout: Manual ED/G start

K/A IMPORTANCE: RO 4.3

10CFR55 CONTENT: 55.41(b) RO 7

OBJECTIVE: EPP-001-03
Demonstrate an understanding of selected steps, cautions, and notes in EPP-1 by explaining the basis of each.

REFERENCES: SD-006

SOURCE: New Significantly Modified **X** Modified/Direct

Bank Number EPP-001-06 005

JUSTIFICATION:

a. **CORRECT** SI Pump "A" is started by the SI Sequencer regardless of source of power to bus, but Charging Pump "B" is tripped if an SI signal is present and the DG is supplying the bus.

b. Plausible since DG carrying the bus prevents some loads from starting. SI Pump "A" will be started regardless of power source.

c. Plausible since equipment operation in response to SI is desirable. Charging Pump "B" is tripped if SI signal is present and DG is supplying bus.

d. Plausible since DG carrying the bus prevents some loads from starting. SI Pump "A" will be started regardless of power source.

DIFFICULTY:
Comprehensive/Analysis Memory **X** Rating 3

Knowledge of effect of DG supplying power to bus on sequencer operations.

REFERENCES SUPPLIED: NONE

LOGIC DIAGRAM - SAFEGUARDS SEQUENCING LOGIC

ESF-FIGURE-6 (Rev . 1)

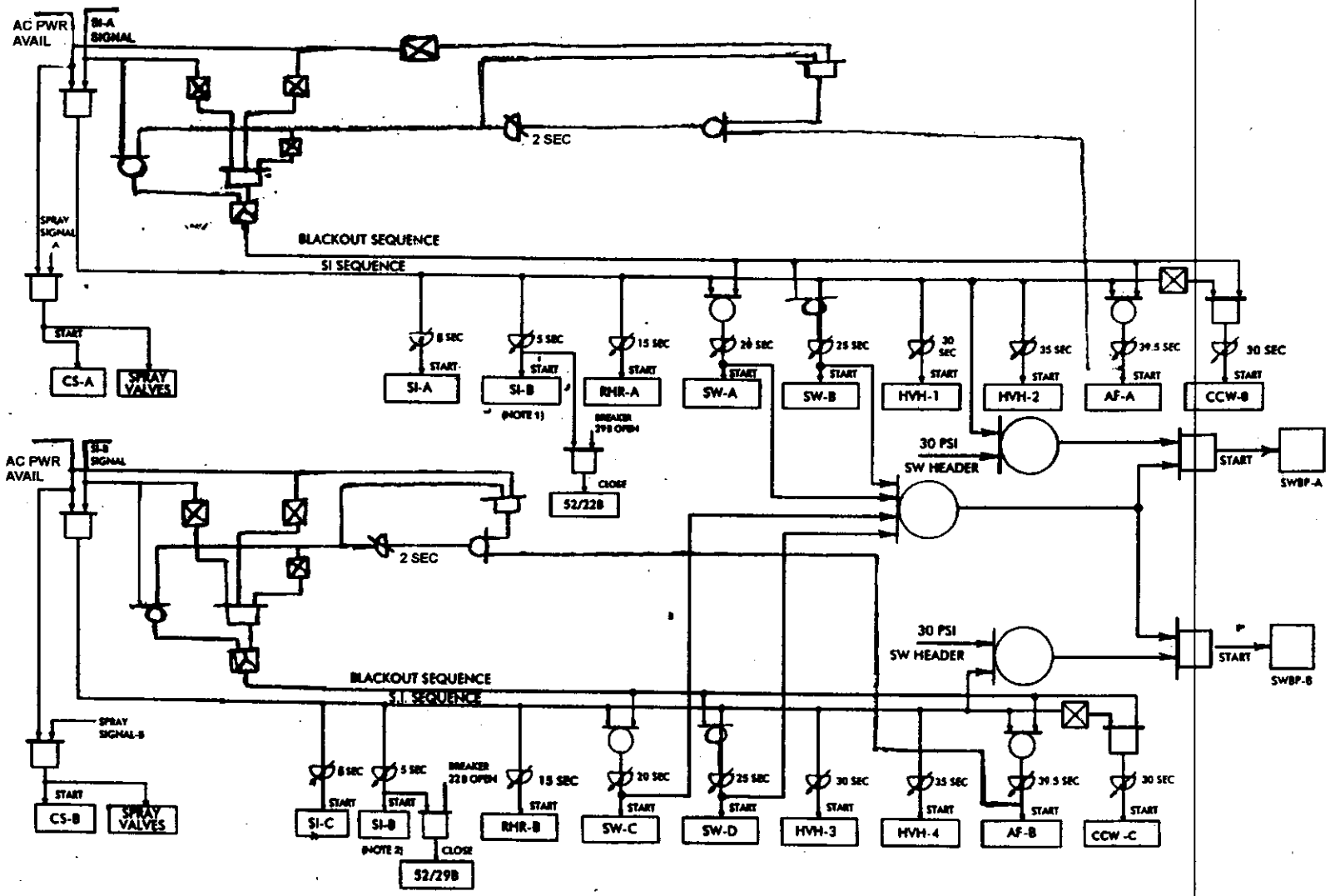

INFORMATION USE ONLY

auxiliary feed pump to prevent its breaker from closing due to a loss of feed pumps or a low-low level in a steam generator. The diesel generator is started and its output breaker closes when output voltage builds up (within 10 seconds). There is a two-second time delay that ensures that a voltage dip does not result in closure unless E2 is de-energized. The closing of the output breaker renews the block to ensure that "B" auxiliary feed pump starts at the proper time. When the loss of voltage on the E2 Bus is sensed, the timing for the blackout sequence starts. After twenty (20) seconds "C" Service Water Pump starts, a start signal is sent to both Service Water Booster Pumps, and the booster pumps will start and both Service Water Booster Pumps start when the Service Water Header pressure builds up to 30 PSI. After twenty (25) seconds "D" Service Water Pump starts and a start signal is sent to both Service Water Booster Pumps. Both Service Water pumps are started to ensure sufficient flow exist to the EDG if one of the pumps is inoperable. After thirty (30) seconds "C" Component Cooling Pump will start. After thirty-nine and one-half (39.5) seconds "B" Auxiliary Feed Pump will start and reset the blackout sequence, provided that sufficient voltage is restored to E2.

If sufficient voltage does not exist on E2 at the end of one cycle, the control circuit will lock-out the loss of voltage signal and the blackout sequence will stop. In this case, the E2 motor loads must be manually started upon voltage restoration. This lock-out feature is installed to prevent excessive cycling of equipment and to remove additional battery loading during a sustained loss of power to E2.

6.3.3 Loss of power to the Emergency Busses with an S-Signal

The same action that occurred in Item 6.3.1 and 6.3.2 will take place except the blackout sequence will be blocked by the S-Signal. During the bus clearing 52/1B and 52/2B will also be opened on the E1 side and 52/15B and 52/32A and 52/16B will be open on the E2 side. This is a redundant measure to ensure the Emergency Busses are isolated from the rest of the plant electrical system. After the diesel generator output breakers are closed the safeguard sequence will take place. If a Containment Spray signal (P-signal) is present, the Containment Spray pumps will start anytime power is available to its respective emergency bus.

NOTE: "B" and "C" Charging Pumps will be tripped if a SI signal is present and power is being supplied by diesel generators.

NOTE: "B" and "C" Component Cooling Pumps will be tripped if a SI and a spray signal are present and power is being supplied by diesel generators.

NOTE: "B" and "C" Component Cooling Pumps will not start automatically on low pressure if the diesel generator is supplying its respective bus.

INFORMATION USE ONLY

EPP-001-06 005

Given the following plant conditions:

- The plant was operating at 100% power
- A reactor trip and loss of off-site power has occurred
- Emergency Busses E-1 and E-2 have been energized by the Emergency Diesel Generators

Which ONE (1) of the following describes the equipment which will be started by the Blackout Sequencer?

A. Charging Pump "B" and Auxiliary Feedwater Pump "A"

B. Charging Pump "B" and Service Water Pump "D"

C. Service Water Pump "A" and Service Water Pump "D"

✓D. Service Water Pump "A" and Auxiliary Feedwater Pump "A"

Question: 71

Which ONE (1) of the following provides an Automatic Signal that will cause a complete Feedwater Isolation, closing the Feedwater Regulating Valves (FRVs), Feedwater Regulating Bypass Valves, and the Feedwater Block Valves?

a. Reactor Trip coincident with Low Tave

b. Safety Injection

c. Hi-Hi Steam Generator Level

d. High Steamline Differential Pressure on Channel IV

Answer:

b. Safety Injection

QUESTION NUMBER: 71
TIER/GROUP: 2/1

K/A: 059A3.06
Ability to monitor automatic operation of the MFW, including: Feedwater isolation

K/A IMPORTANCE: RO 3.2

10CFR55 CONTENT: 55.41(b) RO 6

OBJECTIVE: FW-09
Explain the normal operation of the Feedwater control systems. Include function, instrumentation, interlocks, annunciators, and setpoints.

REFERENCES: SD-027

SOURCE: New Significantly Modified Modified/Direct **X**

Bank Number FW-09 003

JUSTIFICATION:

a. Plausible since this signal closes the FRVs. Does not close the other valves.
b. **CORRECT** Safety Injection closes all of the identified valves.
c. Plausible since this signal closes the FRVs and bypass valves. Does not close the block valves.
d. Plausible since a high steamline differential pressure would result in a Safety Injection if sensed on more than one channel. Does not close any of the valves if only sensed on a single channel.

DIFFICULTY:
Comprehensive/Analysis Memory **X** Rating 2

Knowledge of automatic actions associated with FWI.

REFERENCES SUPPLIED: NONE

4.4.1 Refer to Attachment 10.4 for a complete listing of the Feedwater Instrument Setpoints

5.0 CONTROLS AND PROTECTION

5.1 Control Systems

5.1.1 Main Feedwater Control

The steam generator level is controlled in order to insure the proper water inventory for various operational and accident conditions. The control is achieved by variations in the feedwater flowrate.

In normal power operation, the position of the feedwater control valve is controlled by the three-element controller (feedwater flow, steam flow, and level deviation), with the programmed level setpoint input from selected turbine first stage pressure. Both the steam flow and feed flow signals used for control can be supplied by either of two transmitters as selected by a control board mounted selector switch.

The setpoint of the level controller is a function of load (selectable turbine first stage pressure between PT-446 or PT-447). The level setpoint is programmed to linearly rise from 39 to 52% as load increases from 0% to 20% turbine load and then remains constant as load continues to increase. The output of the level controller is then fed into the feedwater control valve controller. The level input is only from LT-476, LT-486, and LT-496 associated with steam generators A, B, and C, respectively.

Failure of a steam flow or feedwater flow transmitter causes a flow mismatch alarm to annunciate. The steam flow, feed flow, and level signals used for control are recorded on a three pen recorder.

To prevent excessive moisture carryover caused by high steam generator water level, a signal of high water level will override all other control signals and close the feedwater control valve of the affected steam generator. This signal also trips both main feedwater pumps and closes the feedwater control bypass valve, and trips the turbine. The signal is derived from coincidence of two out of three level channels. This feedwater isolation must be reset on the RTGB after the water level drops below the trip point.

The control signals affecting the feedwater control valves are listed below in the order of increasing priority:

1. Three-element control system
2. Manual control (RTGB)
3a. Low T_{AVG} and reactor trip (closes main feed regulating valves only)
3b. High steam generator water level (closes main feed regulating valve and bypass

INFORMATION USE ONLY

valve of affected steam generator, trips feedwater pumps, trips turbine)

3c. Safety Injection (closes main feed regulating valves, bypass valves, feedwater block valves, trips feedwater pumps, trips turbine)

The auto/manual selector switch on the side of the Bailey positioner at the feedwater regulating valves cannot be used for local pneumatic valve control. If manual is selected, the valve will fail closed.

A wide-range level channel, calibrated for no-load conditions, aids manual level control from hot shutdown to cold shutdown. This channel consists of a recorder, high and low level alarms (only function when steam generator pressure is less than 614 psig), and indicators. Automatic pressure-temperature compensation is not necessary.

Besides the main feedwater regulating valve (FCV-478, -488, or -498), for each steam generator there is a bypass valve (FCV-479, -489, or -499) which is intended to provide manual feedwater flowrate control at low loads. During normal "at power" operation of the plant the bypass valve is closed.

The bypass valve operation is controlled from the RTGB controller station which provides manual positioning of the valve. The opening of the bypass valve is prevented in the presence of either safety injection or high steam generator water level.

The auto/manual selector switch on the side of the Bailey positioner at the feedwater regulating bypass valves can be used for local pneumatic control.

The main feedwater regulating valves and bypasses are operated by utilizing the instrument air system pressure through controllers to properly position the valves.

The main feedwater regulating valves and the bypass regulating valves have OPEN and CLOSED light indications. These position indication lights are located on the RTGB adjacent to their respective controllers.

The main feedwater regulating valves rely on motor operated block valves if needed to isolate them from the main feedwater pump discharge. These valves are controlled from the RTGB and supplied power from: FW-V2-6A for "A" steam generator from MCC-5, FW-V2-6B for "B" steam generator from MCC-6, and FW-V2-6C for "C" steam generator from MCC-6.

5.1.2 Steam Generator Water Level Control

Steam generator level is programmed for operation. The normal no load level is 39% and is programmed from 39% to 52% from 0% to 20% power. From 20% to 100% power the level remains at 52%.

INFORMATION USE ONLY

Question: 71

Which ONE (1) of the following provides an Automatic Signal that will cause a complete Feedwater Isolation, closing the Feedwater Regulating Valves (FRVs), Feedwater Regulating Bypass Valves, and the Feedwater Block Valves?

a. Reactor Trip coincident with Low Tave

b. Safety Injection

c. Hi-Hi Steam Generator Level

d. ~~Lo-Lo Steam Generator Level~~ Hi STEAM LINE DP CH I

Answer:

b. Safety Injection

QUESTION NUMBER: 71
TIER/GROUP: 2/1

K/A: 059A3.06
Ability to monitor automatic operation of the MFW, including: Feedwater isolation

K/A IMPORTANCE: RO 3.2

10CFR55 CONTENT: 55.41(b) RO 6

OBJECTIVE: FW-09
Explain the normal operation of the Feedwater control systems. Include function, instrumentation, interlocks, annunciators, and setpoints.

REFERENCES: SD-027

SOURCE: New Significantly Modified Modified/Direct **X**

Bank Number FW-09 003

JUSTIFICATION:

a. Plausible since this signal closes the FRVs. Does not close the other valves.
b. **CORRECT** Safety Injection closes all of the identified valves.
c. Plausible since this signal closes the FRVs and bypass valves. Does not close the block valves.
d. Plausible since it might be desired to not feed an empty SG unless under the control of the operator. Does not close any of the valves.

DIFFICULTY:
Comprehensive/Analysis Memory **X** Rating 2

Knowledge of automatic actions associated with FWI.

REFERENCES SUPPLIED: NONE

Question: 71

Which ONE (1) of the following provides an Automatic Signal that will cause a complete Feedwater Isolation, closing the Feedwater Regulating Valves (FRVs), Feedwater Regulating Bypass Valves, and the Feedwater Block Valves?

a. Reactor Trip coincident with Low Tave

b. Safety Injection

c. Hi-Hi Steam Generator Level

d. High Steamline Differential Pressure on Channel IV

Answer:

b. Safety Injection

s/c

Question: 72

A high radiation alarm on R-11, Containment Radiation, will ...

a. actuate all containment isolation valves.

b. actuate the Isolation Valve Seal Water System.

c. close the containment purge supply, purge exhaust and pressure relief isolation valves.

d. close the Component Cooling Water containment isolation valves.

Answer:

c. close the containment purge supply, purge exhaust and pressure relief isolation valves.

QUESTION NUMBER: 72
TIER/GROUP: 3

K/A: 2.3.9
Knowledge of the process for performing a containment purge.

K/A IMPORTANCE: RO 2.5

10CFR55 CONTENT: 55.41(b) RO 4

OBJECTIVE: ESF-10
Explain the operation of the ESFAS System.

REFERENCES: AOP-005
OMM-014
SD-019

SOURCE: New Significantly Modified Modified/Direct **X**

Bank Number ESF-10 001

JUSTIFICATION:

a. Plausible since these valves are isolated by an automatic signal. Actuated by Phase A signal which does not come from R-11.

b. Plausible since this is actuated by an automatic signal. Actuated by Phase A signal which does not come from R-11.

c. **CORRECT** R-11 generates a Containment Ventilation Isolation signal which closes the identified valves.

d. Plausible since these valves are isolated by an automatic signal. Actuated by Phase B signal which does not come from R-11.

DIFFICULTY:
Comprehensive/Analysis Memory **X** Rating 2

Knowledge of radiation monitor automatic actions on high alarm.

REFERENCES SUPPLIED: NONE

STEP	INSTRUCTIONS	RESPONSE NOT OBTAINED

ATTACHMENT 12

PROCESS MONITOR R-11/R-12 - CV AIR & PLANT VENT

(Page 2 of 3)

8.	Check CONTAINMENT VENTILATION ISOLATION Valves - CLOSED	Perform the following: a. Depress H.V. OFF on R-11 **OR** R-12 to initiate Containment Ventilation Isolation. b. **IF** any CONTAINMENT VENTILATION ISOLATION Valve fails to close, **THEN** locally verify penetration is isolated from outside CV.
9.	Place The Following CV IODINE REMOVAL FAN Control Switches To PREPURGE Position: • HVE-3 • HVE-4	
10.	Check RCS Temperature - GREATER THAN 200°F	Initiate CV closure using OMM-033, Implementation Of CV Closure.
11.	Request RC To Perform A Background Radiation Check At Radiation Monitors R-11 **AND** R-12	

8.4.2 (Continued)

4. When all Unit 2 and Unit 1 Circulating Pumps are out of service, no liquid release may be made.

5. When a reduction in the number of operating Circulating Pumps result in the monitor(s) alarm/trip setpoint being less conservative than calculated on the permit, without delay, suspend the release and obtain a new setpoint so it is conservative.

8.4.3 The following applies to the setpoints for R-11 and R-12:

1. Setpoint for Containment Pressure Release and a Batch Containment Purge shall be obtained from a Release Permit prior to each release using the methodology in the ODCM.

2. When CV Integrity is required **AND** a release from the containment is not in progress, R-11 and R-12 alarm setpoints shall be no greater than 1.80 times the level shown on the meter at the time the alarm point is to be set, provided there is no abnormal leak rate in the primary system. When the setpoint is calculated, the result shall always be rounded down to ensure the setpoint used is conservative.(ACR 94-01154)

3. When the R-11 and R-12 alarm setpoints are changed due to background changes, the alert level setpoints on RMS Recorder RR-1 should be changed to 1.5 times the level shown on the meter. Changes to the alert level setpoints should be requested of I&C through the initiation of a Work Request. (CR 99-00058)

4. When Containment Ventilation Flow Isolation is required, and a release is in progress, then R-11/12 sample location and alarm setpoints are provided by Gaseous Release Permits based on the methodology in the ODCM.

5. When Containment Ventilation Flow Isolation function is **not** required and R11/12 is sampling Containment, then alarm setpoints should be set IAW Step 8.4.3.2.

ATTACHMENT 10.2
Page 1 of 2

RMS INSTRUMENT CONTROL FUNCTIONS

MONITOR	MEDIUM MONITORED	FUNCTION
R-1	Control Room Air	Switches Control Room ventilation into the emergency pressurization operating mode.
R-11	CV Air or Stack Particulate	Closes C.V. purge supply and exhaust; pressure and vacuum relief valves.
R-12	CV Air or Stack Gas	Same function as R-11
R-14C	Stack Gas (Low Range)	Closes waste gas decay tank release valve (RCV-014); swaps R-14 Skid over to high range (two different setpoints).
R-14D	Stack Gas (Mid Range)	Swaps R-14 Skid over to low range.
R-18	Liquid Waste Disposal	Closes waste disposal system liquid release valve (RCV-018)
NOTE The blowdown tank release isolation valve (V1-31) will close if all three SG monitors (R-19A, R-19B and R-19C) are in alarm.		
R-19A	SG "A" Blowdown	Closes; blowdown isolation valves FCV-1930A & FCV-1930B, sample isolation valves FCV-1933A & FCV-1933B, rate flow control valve FCV-4204A.

INFORMATION ONLY

Question: 73

How will an inadvertent closure of CC-716A, CCW to RCP Isolation, affect CCW flow to the following components inside Containment?

	RCP MOTOR BEARING COOLERS	RCP THERMAL BARRIER HX	CONTROL ROD DRIVE COOLERS
a.	**NOT** Isolated	Isolated	Isolated
b.	Isolated	**NOT** Isolated	Isolated
c.	Isolated	Isolated	**NOT** Isolated
d.	Isolated	Isolated	Isolated

Answer:

d.	Isolated	Isolated	Isolated

QUESTION NUMBER: 73
TIER/GROUP: 2/1

K/A: 003K1.02
Knowledge of the physical connections and/or cause-effect relationships between the RCPS and the RCP motor cooling and ventilation

K/A IMPORTANCE: RO 2.6

10CFR55 CONTENT: 55.41(b) RO 4

OBJECTIVE: CCW-03
Describe the major flow path through the CCW Systems.

REFERENCES: SD-013

SOURCE: New Significantly Modified **X** Modified/Direct

Bank Number CCW-03 001

JUSTIFICATION:

a. Plausible since motor bearing coolers/CRDM coolers and thermal barrier HXs have separate return lines. Common supply isolates all components.

b. Plausible since motor bearing coolers/CRDM coolers and thermal barrier HXs have separate return lines. Common supply isolates all components.

c. Plausible since motor bearing coolers/CRDM coolers and thermal barrier HXs have separate return lines. Common supply isolates all components.

d. **CORRECT** Common supply isolation valve to all of these components.

DIFFICULTY:
Comprehensive/Analysis **X** Memory Rating 3

Application of system knowledge for components isolated by alignment.

REFERENCES SUPPLIED: NONE

PSA RELATED

COMPONENT COOLING WATER SYSTEM

CCW-FIGURE-3 (Rev . 0)

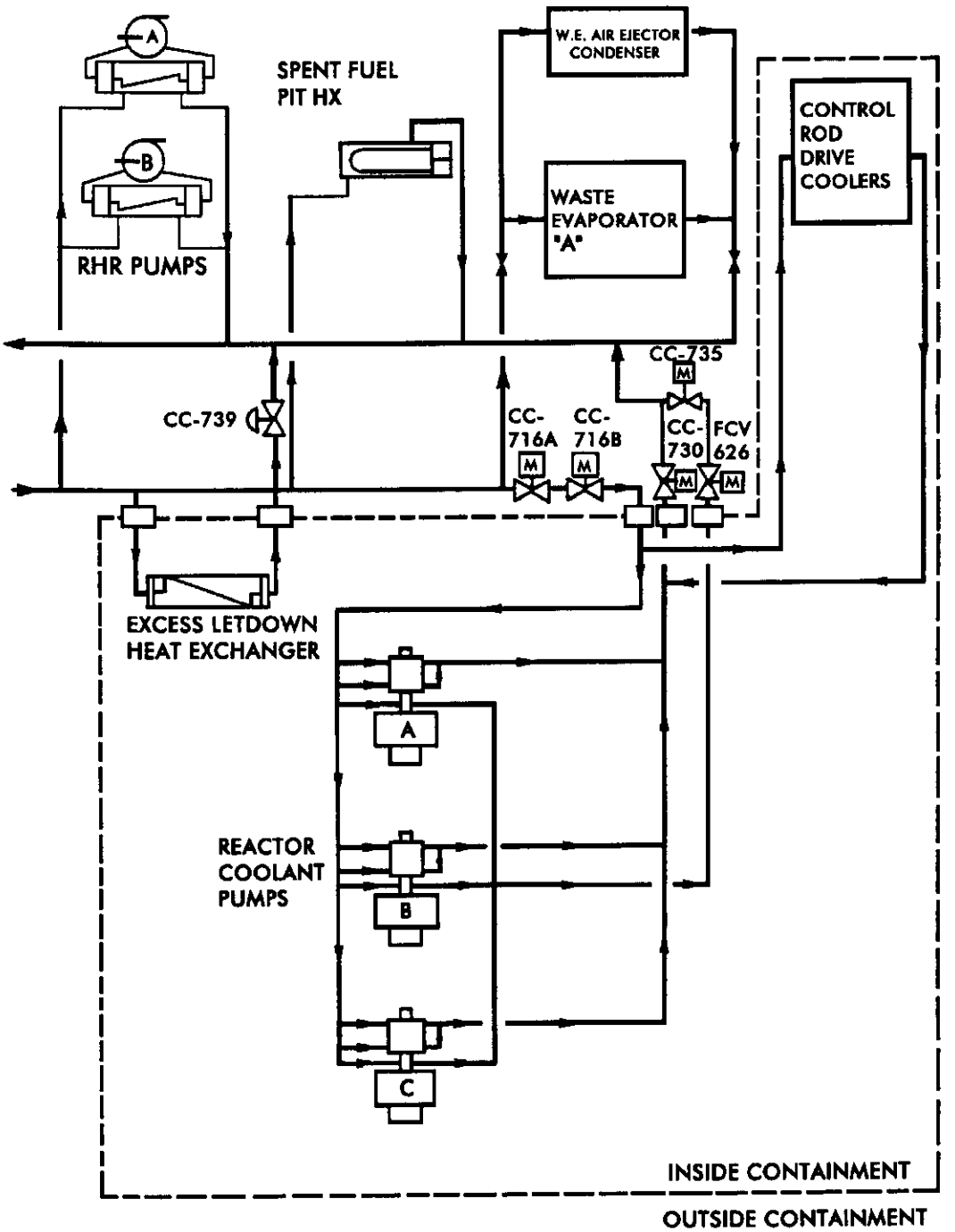

INFORMATION USE ONLY

ATTACHMENT 10.5
Page 1 of 1

CCW INSTRUMENT SET POINTS

INSTRUMENT NO.	FUNCTION	SETPOINTS	
TIA-607	CC Heat Exchanger Outlet Temperature.	High Alarm	120°F ± 2°F
PCA-611	CC Pump Discharge Pressure.	Low Alarm/ Start Standby Pump	78 psig ± 5 psig
LIA-614	CC Surge Tank Level.	High Alarm	55% ± 1%
		Low Alarm	45% ± 1%
TIA-625	RCP Therm. Barrier Cooling Water Temperature.	High Alarm	140°F ± 2°F
FCA-626	RCP Therm. Barrier Cooling Water Flow.	High Alarm/ Close FCV-626	100 gpm ± 5 gpm
		Low Alarm	50 gpm ± 5 gpm
TIA-627	RCP Brng.Oil Cooler Cooling Water Outlet Temperature.	High Alarm	130°F ± 2°F
FIA-629/632/635	RCP Brng. Oil Cooler Flow.	High Alarm	140 gpm ± 5 gpm
FIA-637/638	RHR Pump Cooling Water Flow.	Low Alarm	7 gpm ± 0.5 gpm
FIA-657	CS Pump Cooling Water Flow.	Low Alarm	30 gpm ± 2 gpm
FIA-658	SI Pump Cooling Water Flow.	Low Alarm	50 gpm ± 5 gpm
FIA-678	Control Rod Drive Cooler Cooling Water Flow.	Low Alarm	100 gpm ± 5 gpm

INFORMATION USE ONLY

CCW-03 001

Which ONE (1) of the following valves, if closed, will result in a loss of cooling water flow to the thermal barrier heat exchanger?

A. CC-832, MAKEUP

B. CC-749A, CCW FROM RHR Hx

✓C. CC-716B, CCW TO RCP ISO

D. CC-730, BRG OUTLET ISO

OK

Question: 74

Assuming **NO** operator actions, what is the expected status of CCW Pump 'B' under each of the following conditions?

Assume CCW Pump 'B' is running prior to each of the events.

	LOSS OF OFFSITE POWER (EDG ENERGIZING BUS)	**LOSS OF OFFSITE POWER CONCURRENT WITH SI (EDG ENERGIZING BUS)**	**SI (BUS ENERGIZED BY OFFSITE)**
a.	ON	OFF	ON
b.	ON	OFF	OFF
c.	OFF	OFF	ON
d.	OFF	ON	OFF

Answer:

a.	ON	OFF	ON

QUESTION NUMBER: 74
TIER/GROUP: 2/3

K/A: 008K4.01
Knowledge of CCWS design feature(s) and/or interlock(s) which provide for the following:
Automatic start of standby pump

K/A IMPORTANCE: RO 3.1

10CFR55 CONTENT: 55.41(b) RO 4

OBJECTIVE: CCW-09
Explain the normal operation of the CCW control systems. Include function, instrumentation, interlocks, annunciators, and setpoints.

REFERENCES: SD-013

SOURCE: New Significantly Modified **X** Modified/Direct

Bank Number CCW-09 005

JUSTIFICATION:

a. **CORRECT** Following a LOOP concurrent with an SI, CCW Pump "B" is not automatically started. May be manually started if required.

b. Plausible since certain conditions prohibit automatic start of pump. Pump will start on SI if power supplied from offsite.

c. Plausible since certain conditions prohibit automatic start of pump. Pump will start on loss of offsite power if SI signal not present.

d. Plausible since certain conditions prohibit automatic start of pump. Pump will start on loss of offsite power if SI signal not present.

DIFFICULTY:
Comprehensive/Analysis Memory **X** Rating 3

Knowledge of effect of ESF signals on CCW autostart.

REFERENCES SUPPLIED: NONE

PSA RELATED

b. Auto Functions (Low pressure during normal operation)

The standby pump(s) auto starts when the CCW Pump Discharge Header pressure drops to 78 psig. (This auto start may be blocked from other events which are discussed later).

5.1.2 Dedicated Shutdown Control Switches

CCW Pump "A" has a two position control switch (STOP/START) spring return to center, located on the Dedicated Shutdown Charging Pump Room Control Panel. This switch allows operation of the pump during certain postulated App. "R" fire scenarios and/or a station blackout event.

A transfer switch with two positions (LOCAL/REMOTE) for CCW Pump "A" is located on the Dedicated Shutdown Panel. This switch is placed in the LOCAL position to allow operation of the CCW Pump "A" from the Dedicated Shutdown Panel Switch. Placing this switch to LOCAL will actuate the CCW PMP A LOCAL CONTROL alarm on APP-036-J9.

When the transfer switch is in LOCAL, placing the CCW pump "A" switch to the START position will start the CCW pump and placing the switch to the STOP position will stop the pump.

5.1.3 Accident / Design Basis Event Operation

- Loss of Offsite Power (EDGs available)

  CCW Pump "A" - manual restart, if power available to the DS bus. The pump will auto start on low CCW pressure, with power available on the bus.

  CCW Pump "B" - auto restart after 30 seconds via the safeguards sequencer blackout (LOOP) logic after Emergency Diesel Generator "A" output breaker closes.

  CCW Pump "C" - auto restart after 30 seconds via the safeguards sequencer blackout (LOOP) logic after Emergency Diesel Generator "B" output breaker closes.

  During a Loss of Offsite Power, all three CCW pumps are load shed from their respective buses. CCW pumps B & C which are supplied from emergency bus E1 and E2 will trip on bus undervoltage via the 27 Bus Undervoltage Relays. CCW pump A will trip when the undervoltage trip device of the feeder breaker senses the loss of voltage on the DS bus.

INFORMATION USE ONLY

- Safety Injection (SI)/LOCA

  CCW pumps will NOT auto start on the SI sequencer. If an SI signal is present with voltage on respective bus, the operating CCW pump(s) will continue to operate.

  CCW pumps "A", "B" & "C" , if running prior to SI, will continue running as long as power is available.

5.1.4 Auto Or Manual Start Blocks

- LOCA with Loss of Offsite Power

  CCW pumps "B" & "C" will not auto restart on low pressure. CCW pumps "B" and "C" will be stripped from their respective buses and must be manually started.

  CCW pump "A" will auto restart on low pressure if DS Bus energized.

- Loss of Offsite Power with Containment Spray actuation

  With a spray signal present and EDG output breakers closed, neither CCW pumps "B" or "C" will start automatically.

  CCW Pump "A" may be manually started from the RTGB if DS bus energized.

- Low Pressure Auto Start Block

  Stopping a CCW pump with a low pressure auto start signal present will prevent the auto start from low pressure. However, the pump may be restarted by going to the start position on the RTGB control switch. To re-enable the auto start on low pressure, either control power fuses for the associated pump will have to be removed and reinstalled <u>or</u> the pump will have to be started from the RTGB control switch. There is no time limit associated with holding the switch in the stop position to block the low pressure auto start. This low pressure block will not prevent the CCW pump from starting on a blackout sequence. Pumps "B" and "C" will not start on a low pressure signal at any time that its respective Emergency Diesel Generator output breaker is closed.

5.1.5 Pump Trips

- The CCW pump breakers will trip open on bus undervoltage on its respective bus. CCW pumps B and C must have DC control power available for trip to

INFORMATION USE ONLY

CCW-09 005

Which ONE (1)of the following AUTOMATIC pump starts will be PREVENTED when the "B" Diesel Generator output breaker is closed?

✓A. CCW pump C on low header pressure

B. CCW pump B on low header pressure

C. Containment Spray Pump A from an automatic actuation

D. Containment Spray Pump A from a manual spray actuation

Question: 75

The following plant conditions exist for a large break (DBA) LOCA when the operators begin to implement EPP-15, "Loss of Emergency Coolant Recirculation":

- Both RHR Pumps are secured.
- One SI Pump is running and injecting at 400 gpm.
- Time after trip is 60 minutes
- SI **CANNOT** be terminated due to insufficient subcooling.

Which ONE (1) of the following actions should be taken?

a. Start an additional SI Pump

b. Start one RHR Pump and ensure flow is at least 3000 gpm

c. Throttle SI Pump injection flow to approximately 185 gpm

d. Start both RHR Pumps and ensure flow is at least 3500 gpm

Answer:

c. Throttle SI Pump injection flow to approximately 185 gpm

QUESTION NUMBER: 75
TIER/GROUP: 1/2

K/A: WE11EK1.3
Knowledge of the operational implications of the following concepts as they apply to Loss of Emergency Coolant Recirculation: Annunciators and conditions indicating signals, and remedial actions

K/A IMPORTANCE: RO 3.6

10CFR55 CONTENT: 55.41(b) RO 8

OBJECTIVE: EPP-015-08
Given plant conditions, evaluate the appropriate actions to mitigate consequences of steps related to EPP-15.

REFERENCES: EPP-15, Attachment 1

SOURCE: New Significantly Modified **X** Modified/Direct

Bank Number EPP-015-08 001

JUSTIFICATION:

a. Plausible since a LBLOCA condition exists and heat removal from the core is of most concern. Required flow rate is below the flow of current injection.

b. Plausible since RHR pumps are typically left injecting when an extremely low pressure condition exists in the RCS. Secured due to inadequate RWST inventory without capability of aligning suction to sump.

c. **CORRECT** Intersection of 60 minute line with required flow rate curve is approximately 185 gpm.

d. Plausible since RHR pumps are typically left injecting when an extremely low pressure condition exists in the RCS. Secured due to inadequate RWST inventory without capability of aligning suction to sump.

DIFFICULTY:
Comprehensive/Analysis **X** Memory Rating 3

Interpretation of data from required flow rate curves.

REFERENCES SUPPLIED: EPP-15, Attachment 1

PSA RELATED

ATTACHMENT 1
REQUIRED FLOW RATE VERSUS TIME AFTER REACTOR TRIP
Page 1 of 1

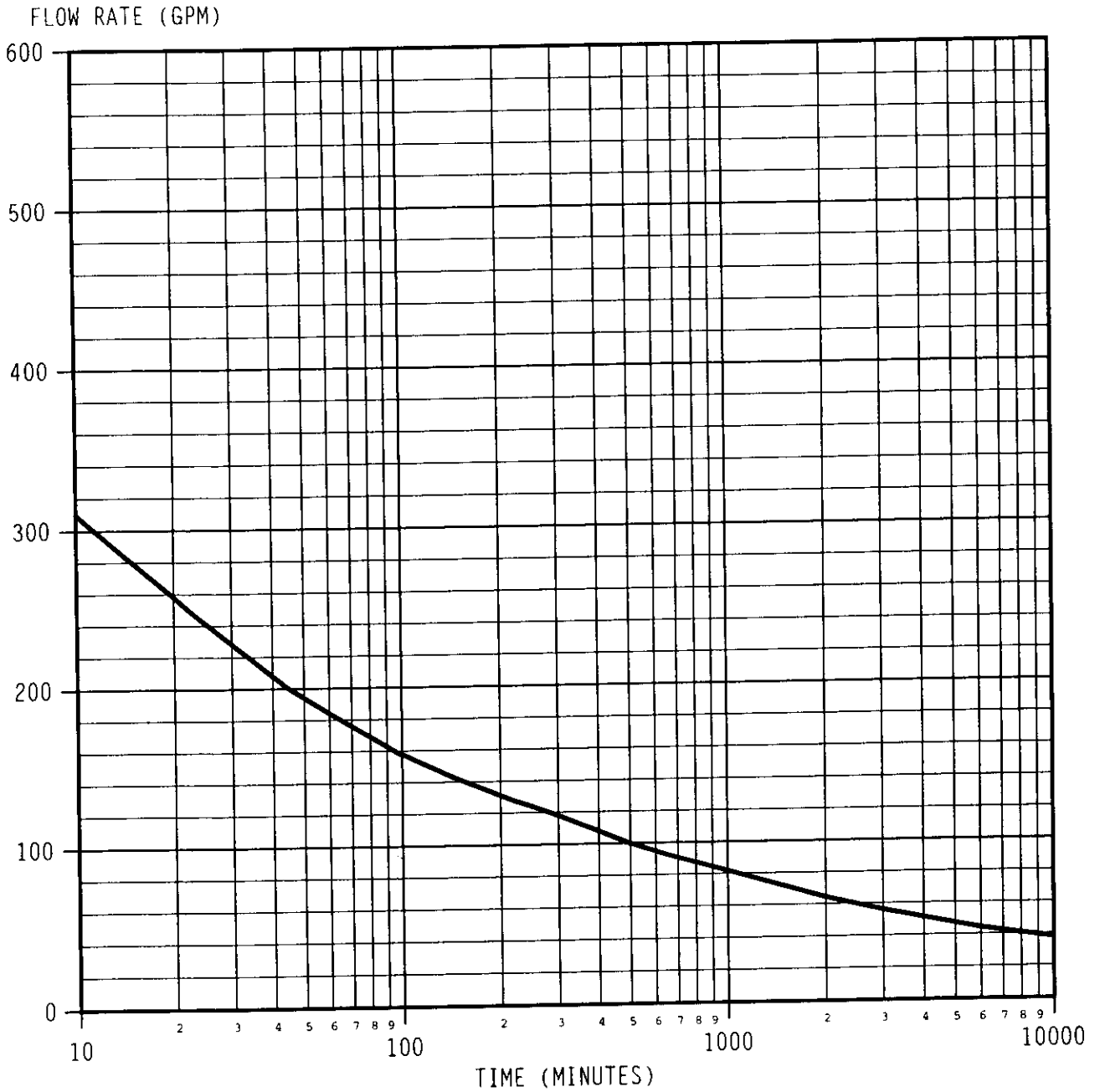

EPP-015-08 001

The following plant conditions exist for a large break (DBA) LOCA when the operators begin to implement EPP-15 Loss of Emergency Coolant Recirculation.

* One SI and One RHR pumps are running
* Time after trip and SI is 30 minutes
* SI cannot be terminated due to insufficient subcooling

Which ONE (1) of the following states the minimum SI flow for these conditions?

A. Only one SI pump and one RHR pump injuecting at full flow.

B. Only one SI pump injecting at full flow.

✓C. Only one SI pump injecting with flow manually throttled to approximately 230 gpm.

D. Only one SI pump inujecting with flow manually throttled to approximately 120 gpm.

Question: 75

The following plant conditions exist for a large break (DBA) LOCA when the operators begin to implement EPP-15, "Loss of Emergency Coolant Recirculation":

- Both RHR Pumps are secured.
- One SI Pump is running and injecting at 400 gpm.
- Time after trip is 60 minutes
- SI **CANNOT** be terminated due to insufficient subcooling.

Which ONE (1) of the following actions should be taken?

a. Start an additional SI Pump

b. Start an RHR Pump 3000 gpm

c. Throttle SI Pump injection flow to approximately 185 gpm

~~Start an RHR pump and~~

d. Throttle SI Pump injection flow to approximately 95 gpm

Start 3rd RHR 3500 gpm

Answer:

c. Throttle SI Pump injection flow to approximately 185 gpm

QUESTION NUMBER: 75
TIER/GROUP: 1/2

K/A: WE11EK1.3
Knowledge of the operational implications of the following concepts as they apply to Loss of Emergency Coolant Recirculation: Annunciators and conditions indicating signals, and remedial actions

K/A IMPORTANCE: RO 3.6

10CFR55 CONTENT: 55.41(b) RO 8

OBJECTIVE: EPP-015-08
Given plant conditions, evaluate the appropriate actions to mitigate consequences of steps related to EPP-15.

REFERENCES: EPP-15, Attachment 1

SOURCE: New Significantly Modified **X** Modified/Direct

Bank Number EPP-015-08 001

JUSTIFICATION:

a. Plausible since a LBLOCA condition exists and heat removal from the core is of most concern. Required flow rate is below the flow of current injection.

b. Plausible since RHR pumps are typically left injecting when an extremely low pressure condition exists in the RCS. Secured due to inadequate RWST inventory without capability of aligning suction to sump.

c. **CORRECT** Intersection of 60 minute line with required flow rate curve is approximately 185 gpm.

d. Plausible since correct action is to throttle injection flow. Correct flow rate is 185 gpm.

DIFFICULTY:
Comprehensive/Analysis **X** Memory Rating 3

Interpretation of data from required flow rate curves.

REFERENCES SUPPLIED: EPP-15, Attachment 1

PSA RELATED

ok

Question: 76

Which ONE (1) of the following identifies the **MINIMUM** and **MAXIMUM** Containment pressures permissible to allow continued power operations, in accordance with Technical Specifications?

	MINIMUM	**MAXIMUM**
a.	- 1.0 psig	+ 1.0 psig
b.	- 1.0 psig	+ 2.0 psig
c.	- 0.8 psig	+ 1.0 psig
d.	- 0.8 psig	+ 2.0 psig

Answer:

c.	- 0.8 psig	+ 1.0 psig

QUESTION NUMBER: 76
TIER/GROUP: 2/2

K/A: 029A1.03
Ability to predict and/or monitor changes in parameters (to prevent exceeding design limits) associated with operating the Containment Purge System controls including: Containment pressure, temperature, and humidity

K/A IMPORTANCE: RO 3.0

10CFR55 CONTENT: 55.41(b) RO 9

OBJECTIVE: CV-12
State the Technical Specification Limitations and explain the bases for the CV and IVSW System.

REFERENCES: Tech Spec 3.6.4

SOURCE: New Significantly Modified **X** Modified/Direct

Bank Number CV-12 002

JUSTIFICATION:

a. Plausible since minimum is at vacuum and maximum is a positive pressure. Minimum value is - 0.8 psig.

b. Plausible since minimum is at vacuum and maximum is a positive pressure. Minimum value is - 0.8 psig and maximum is + 1.0 psig.

c. **CORRECT** Minimum allowable pressure is - 0.8 psig and maximum is + 1.0 psig.

d. Plausible since minimum is at vacuum and maximum is a positive pressure. Maximum value is + 1.0 psig.

DIFFICULTY:
Comprehensive/Analysis Memory **X** Rating 2

Knowledge of Tech Spec LCO for containment pressure.

REFERENCES SUPPLIED: NONE

3.6 CONTAINMENT SYSTEMS

3.6.4 Containment Pressure

LCO 3.6.4 Containment pressure shall be ≥ -0.8 psig and ≤ +1.0 psig.

APPLICABILITY: MODES 1, 2, 3, and 4.

ACTIONS

CONDITION	REQUIRED ACTION	COMPLETION TIME
A. Containment pressure not within limits.	A.1 Restore containment pressure to within limits.	1 hour
B. Required Action and associated Completion Time not met.	B.1 Be in MODE 3. AND B.2 Be in MODE 5.	6 hours 36 hours

SURVEILLANCE REQUIREMENTS

SURVEILLANCE		FREQUENCY
SR 3.6.4.1	Verify containment pressure is within limits.	12 hours

CV-12 002

Which ONE (1) of the following is the maximun initial CV pressure that will ensure that the containment design pressure of 42 psig will not be exceeded in the event of a major loss of coolant accident?

A. 0.9 psig

B. 1.0 psig

✓C. 2.0 psig

D. 4.0 psig

Question: 77

Which ONE (1) of the following, in accordance with AOP-024, Loss of Instrument Bus, describes how AUTO control is restored to a control station when power is restored to the control station?

a. The operator depresses AUTO when the MANUAL light is energized

b. The operator depresses AUTO when the the AUTO light is energized

c. The operator depresses AUTO immediately upon restoration of power

d. **NO** actions are required since the control station automatically returns to AUTO

Answer:

a. The operator depresses AUTO when the MANUAL light is energized

QUESTION NUMBER: 77
TIER/GROUP: 1/1

K/A: 057AK2.03
Knowledge of the interrelations between the Loss of Vital AC Instrument and controllers and positioners

K/A IMPORTANCE: RO 2.2

10CFR55 CONTENT: 55.41(b) RO 6

OBJECTIVE: AOP-024-03
Demonstrate an understanding of selected steps, cautions, and notes in AOP-024 by explaining the basis of each.

REFERENCES: AOP-024

SOURCE: New Significantly Modified Modified/Direct **X**

Bank Number AOP-024-03 005

JUSTIFICATION:

a. **CORRECT** Controllers take 15-20 secs to return to manual after energizing. May be returned to auto anytime after this.

b. Plausible since this is an indication on the controller. Must be in manual prior to shifting back to auto.

c. Plausible since power has been restored to the controller. Must be in manual prior to shifting back to auto.

d. Plausible since the controller was previously in auto. Must be in manual prior to shifting back to auto.

DIFFICULTY:
Comprehensive/Analysis Memory **X** Rating 2

Knowledge of controller response following loss of power.

REFERENCES SUPPLIED: NONE

PSA RELATED

STEP	INSTRUCTIONS	RESPONSE NOT OBTAINED
4.	Determine Failed Instrument Bus (IB) From Any Of The Following: • Available indications OR • Attachment 1, Bistable Status Lights OR • Control & Instrument Power Lights on the NI Cabinet Drawers (will not indicate a loss of only Instrument Bus 6, 7, 8, or 9)	

NOTE

Affected controllers may be returned to AUTO anytime the Instrument Bus power is regained. Controllers will take 15 to 20 sec. to return to manual after reenergizing.

* 5.	Check Emergency Busses E-1 AND E-2 - ENERGIZED FROM THE 4160V BUSSES	IF an Emergency Bus has deenergized, THEN check the EDG STARTS and its output breaker CLOSES. IF the EDG has NOT auto-started, THEN initiate a start from the RTGB (will involve a 4.5 minutes delay).
* 6.	Check CVC-460A & B, LTDN LINE STOP - CLOSED	Go To Step 8.
7.	Place The Selector Switch For CVC-460A & B In The Closed Position	
8.	Check Instrument Bus 2 - ENERGIZED	Place the RCS MAKEUP CONTROL Switch to the STOP position.

Question: 77

Which ONE (1) of the following, in accordance with AOP-024, Loss of Instrument Bus, describes how AUTO control is restored to a control station when power is restored to the control station?

a. The operator depresses AUTO when the MANUAL light is energized

b. The operator depresses AUTO when the the AUTO light is energized

c. The operator depresses AUTO immediately upon restoration of power

d. No actions are required since the control station automatically returns to AUTO

Answer:

a. The operator depresses AUTO when the MANUAL light is energized

QUESTION NUMBER: 77
TIER/GROUP: 1/1

K/A: 057AK2.03
Knowledge of the interrelations between the Loss of Vital AC Instrument and controllers and positioners

K/A IMPORTANCE: RO 2.2

10CFR55 CONTENT: 55.41(b) RO 6

OBJECTIVE: AOP-024-03
Demonstrate an understanding of selected steps, cautions, and notes in AOP-024 by explaining the basis of each.

REFERENCES: AOP-024

SOURCE: New Significantly Modified Modified/Direct **X**

Bank Number AOP-024-03 005

JUSTIFICATION:

a. **CORRECT** Controllers take 15-20 secs to return to manual after energizing. May be returned to auto anytime after this.

b. Plausible since this is an indication on the controller. Must be in manual prior to shifting back to auto.

c. Plausible since power has been restored to the controller. Must be in manual prior to shifting back to auto.

d. Plausible since the controller was previously in auto. Must be in manual prior to shifting back to auto.

DIFFICULTY:
Comprehensive/Analysis Memory **X** Rating 2

Knowledge of controller response following loss of power.

REFERENCES SUPPLIED: NONE

PSA RELATED

d1c

Question: 78

Given the following plant conditions:

- The unit is in MODE 4.
- RCS temperature is 325°F.
- "A" AFW pump is OOS for maintenance.
- "B" AFW pump is supplying S/Gs.
- A small AFW leak occurs between V2-16B, S/G "B" AFW Isolation valve, and V2-20A, AFW Header Section Isolation.
- The operator closes V2-16B and V2-20A to stop the leak.

Which ONE (1) of the following describes an outcome of this event?

a. AFW flow from "B" AFW pump will be available to "B" and "C" S/Gs only

b. AFW flow from "B" AFW pump will be available to "C" S/G only

c. **NO** AFW flow from "B" AFW pump is available

d. AFW flow from "B" AFW pump will be available to "A" and "C" S/Gs only

Answer:

d. AFW flow from "B" AFW pump will be available to "A" and "C" S/Gs only

QUESTION NUMBER: 78
TIER/GROUP: 2/1

K/A: 061K3.02
Knowledge of the effect that a loss or malfunction of the AFW will have on S/G

K/A IMPORTANCE: RO 4.2

10CFR55 CONTENT: 55.41(b) RO 4

OBJECTIVE: AFW-03
Describe the major flow paths through the AFW Systems.

REFERENCES: SD-042

SOURCE: New Significantly Modified Modified/Direct **X**

Bank Number AFW-14 003

JUSTIFICATION:

a. Plausible since leak is on line to SG "B". Isolated from SG "B" only.
b. Plausible since leak is on cross connect line. Isolated from SG "B" only.
c. Plausible since leak is on discharge side of "B" MDAFWP. Isolated from SG "B" only.
d. **CORRECT** "B" MDAFW Pump is isolated from SG "B" only.

DIFFICULTY:
Comprehensive/Analysis **X** Memory Rating 3

Comprehension of the relationship between AFW flow paths and the MDAFW Pumps.

REFERENCES SUPPLIED: NONE

PSA RELATED

AUXILIARY FEEDWATER SYSTEM

AFW-FIGURE-1 (Rev . 0)

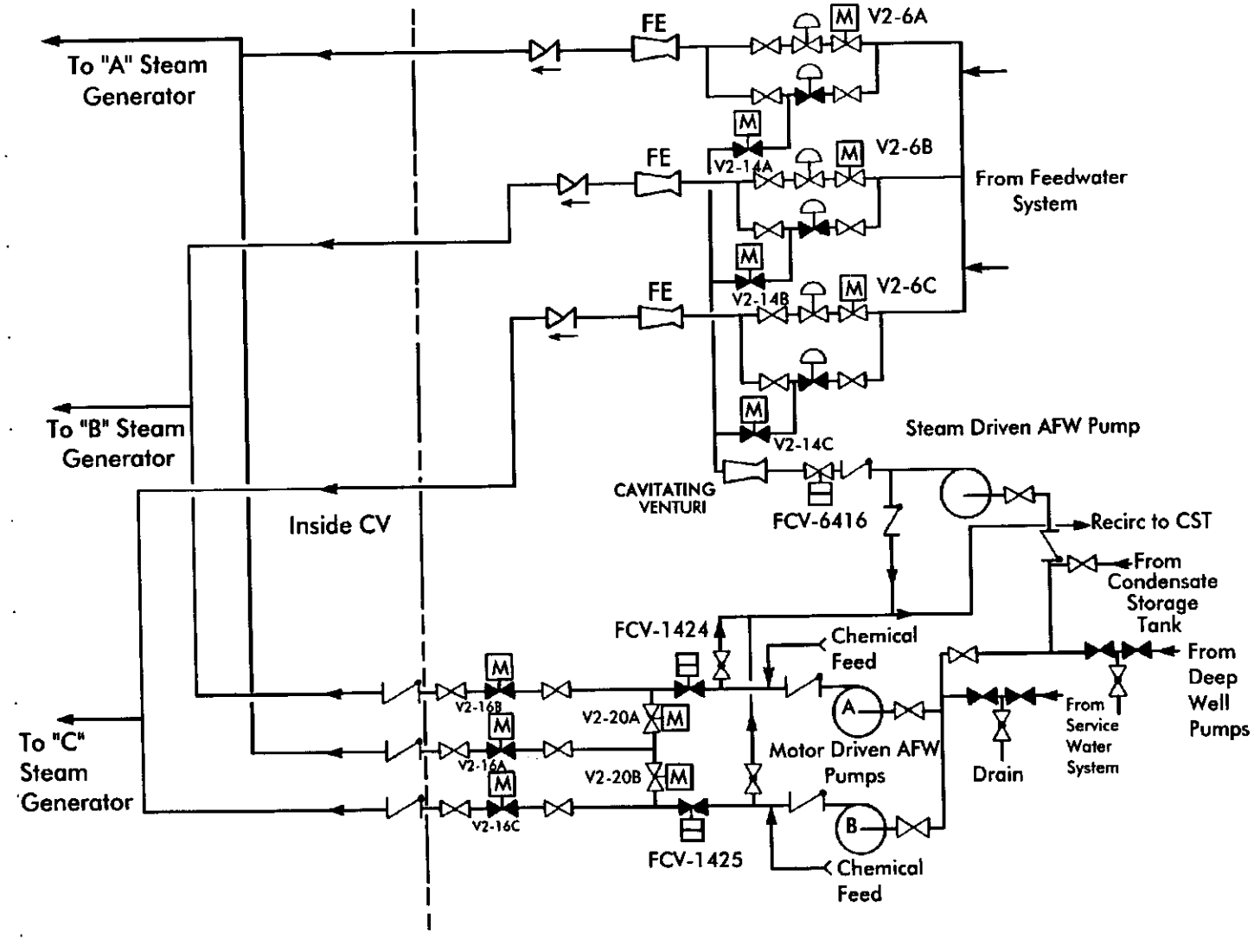

Question: 79

Given the following plant conditions:

- The plant was at 100% power.
- Following a LOCA, the plant has been placed in Cold Leg Recirculation.
- A security guard has fallen down the ladder into the RHR pump room and is in critical condition.
- High radiation levels exist in the RHR pump room.

Which ONE (1) of the following describes the H. B. Robinson Administrative Total Effective Dose Equivalent (TEDE) exposure limit for emergency workers who will be entering the area?

a. 2 REM

b. 5 REM

c. 10 REM

d. 25 REM

Answer:

d. 25 REM

QUESTION NUMBER: 79
TIER/GROUP: 3

K/A: 2.3.4
Knowledge of radiation exposure limits and contamination control, including permissible levels in excess of those authorized.

K/A IMPORTANCE: RO 2.5

10CFR55 CONTENT: 55.41(b) RO 12

OBJECTIVE: 10CFR20-03
Identify the Dose Limits for adults including: a. Occupational Dose Limits

REFERENCES: PLP-007
NGGM-PM-0002

SOURCE: New Significantly Modified **X** Modified/Direct

Bank Number PLP-007 001

JUSTIFICATION:

a. Plausible since this is the extended limit for quarterly dose. 25 REM is permitted.
b. Plausible since this is the legal annual limit and is identified in PLP-007. 25 REM is permitted.
c. Plausible since 10 REM is allowed to protect valuable property. 25 REM is permitted.
d. **CORRECT** 25 REM is limit for lifesaving efforts.

DIFFICULTY:
Comprehensive/Analysis Memory **X** Rating 2

Knowledge of emergency exposure limits.

REFERENCES SUPPLIED: NONE

5.4.4.3 (Continued)

- 50 to 100 Rem in 1 day - no impairment likely but some physiological changes, including possible temporary blood changes, may occur. Medical observations would be required after exposure.

- 100 to 300 Rem in 1 day - some physical impairment possible. Some lethal exposures possible.

The following subsections describe the criteria to be considered for life-saving and facility protection actions.

a. Lifesaving Actions

In emergency situations that require personnel to search for and remove injured persons or entry to prevent conditions that would probably injure numbers of people, a planned dose shall not exceed limits as outlined below:

Dose Limit Rem TEDE[1]	Activity	Condition
5	All	
10	Protecting valuable property	Lower dose not practicable
25	Lifesaving or protection of large populations	Lower dose not practicable
>25	Lifesaving or protection of large populations	Only on a voluntary basis to persons fully aware of the risks involved

[1]Doses to the lens of the eye should be limited to three times the stated TEDE value and doses to any other organ (including skin and body extremities) should be limited to ten times the stated TEDE value.

5.4.4.3 (Continued)

b. Exposures During Repair/Re-entry Efforts

There may be situations where saving of life is not at issue but where it is necessary to enter a hazardous area to protect valuable installations or to make the facility more secure against events which could lead to radioactivity releases (e.g., entry of damage repair parties who are to repair valve leaks or add iodine fixing chemicals to spilled liquids). In such instances, planned dose to emergency workers should not exceed limits as outlined below:

Dose Limit Rem TEDE[1]	Activity	Condition
5	All	
10	Protecting valuable property	Lower dose not practicable
25	Lifesaving or protection of large populations	Lower dose not practicable
>25	Lifesaving or protection of large populations	Only on a voluntary basis to persons fully aware of the risks involved

[1]Doses to the lens of the eye should be limited to three times the stated TEDE value and doses to any other organ (including skin and body extremities) should be limited to ten times the stated TEDE value.

The following additional criteria should also be considered:

1. Persons performing the planned actions should be volunteers broadly familiar with exposure consequences.

2. Women capable of reproduction should not take part in these actions.

3. Internal exposures should be minimized by respiratory protection and contamination controlled by the use of protective clothing.

declared emergency.

3. Site Vice President approval is required to authorize an individual to receive more than 4 rem total dose in a year. This responsibility will not be delegated except during a declared emergency.

6.9 Lifetime Administrative Dose Limit

6.9.1 An individual's cumulative lifetime total effective dose equivalent in rem shall not exceed his age in years as of the end of the year.

6.9.2 An individual's annual administrative limit shall be reduced as necessary to avoid exceeding the lifetime dose limit unless an annual dose limit extension is authorized by the Site Vice President.

6.9.3 If the cumulative lifetime dose (TEDE) in rem upon employment or as of the beginning of the year, whichever is later, exceeds an individual's age in years, an administrative limit of .5 rem per year on CP&L dose shall be imposed, unless a dose limit extension approved by the Site Vice President authorizes a higher limit.

6.10 Planned Special Exposure Policy

It is CP&L policy not to utilize the planned special exposure provisions of 10 CFR 20 to allow individuals to receive dose in excess of annual dose limits.

6.11 Emergency Exposure to Radiation

6.11.1 To assure adequate protection of minors and the unborn, the performance of emergency services should be limited to nonpregnant (pregnancy undeclared) adults (Ref. 6).

6.11.2 During emergencies, doses (TEDE) to workers should be limited to 5 rem. Justification for receiving higher exposures must include the presence of conditions that prevent the rotation of workers or other commonly-used dose reduction methods. Except as noted below, the dose resulting from such emergency exposure should be limited to 10 rem for protecting valuable property, and to 25 rem for lifesaving activities and the protection of large populations. In this context, the exposure incurred by workers to protect large populations may be considered justified when the collective dose avoided by the

emergency operation is significantly larger than that incurred by the workers involved (Ref. 6).

6.11.3 Situations may occur when a dose (TEDE) in excess of 25 rem would be unavoidable in order to carry out a lifesaving operation or to avoid extensive exposure of large populations. It is not possible to prejudge the risk that one should be allowed to take to save the lives of others. However, persons undertaking any emergency operation in which the dose will exceed 25 rem to the whole body should do so only on a voluntary basis and with full awareness of the risks involved, including the numerical levels of dose at which acute effects of radiation will be incurred and numerical estimates of the risk of delayed effects (Ref. 6).

6.11.4 For workers performing services during an emergency, the dose to the lens of the eye should be limited to three times the applicable guideline value for TEDE, and doses to any other organ (including skin and extremities) should be limited to ten times the applicable guideline value for TEDE.

6.11.5 Off-site personnel involved in emergency response to a nuclear plant accident shall not be considered members of the public with respect to radiation dose limits. Such personnel may include, but are not limited to, personnel employed in law enforcement, fire fighting, radiation protection, civil defense, traffic control, health services, environmental monitoring, transportation services, and animal care. The radiation dose received by off-site personnel in the course of assigned emergency response duties shall be considered occupational dose.

6.11.6 All occupational doses, including emergency lifesaving doses, shall be included in the exposure histories of individuals.

6.12 Medical Treatments Involving Radionuclides

6.12.1 Individuals shall inform radiation control of medical treatments involving radionuclides, both intakes and implants, prior to or upon entering a nuclear plant site.

6.12.2 After being informed of medical treatments involving radionuclides, radiation control shall attempt to obtain documentation signed by the individual stating the date of treatment, radionuclide used, activity and medical procedure.

PLP-007 001

Given the following plant conditions:

- The plant was at 100% power
- A reactor trip and safety injection were initiated due to a LOCA
- The leakage was identified in the RHR Pump Room area
- The TSC has initiated efforts to protect the RHR pumps
- High radiation levels exists in the RHR pump room area

Which ONE (1) of the following describes the H. B. Robinson Administrative Total Effective Dose Equivalent exposure limit for emergency workers who will be entering the area?

A. 2 REM

B. 5 REM

✓C. 10 REM

D. 25 REM

Question: 80

Given the following conditions:

- RCP 'B' has just been started for the 1st RCS venting run.
- Five (5) seconds after the RCP start, RCS pressure decreased to 230 psig and RCP 'B' #1 Seal ΔP decreased to 195 psid.

The RCP should be tripped ...

a. if #1 Seal ΔP decreases to 190 psid.

b. immediately due to inadequate #1 Seal ΔP.

c. immediately due to inadequate RCS pressure.

d. after running for an additional 25 seconds.

Answer:

b. immediately due to inadequate #1 Seal ΔP.

memory: pull 5
refers to calc,
external or manual
there are no exceptions
Seen 2/04
MUST
Apply
(b/c)

QUESTION NUMBER: 80
TIER/GROUP: 2/1

K/A: 003A4.04
Ability to manually operate and/or monitor in the control room: RCP seal differential pressure instrumentation

K/A IMPORTANCE: RO 3.1

10CFR55 CONTENT: 55.41(b) RO 3

OBJECTIVE: GP-001-03
Explain selected steps, cautions, and notes in GP-001.

REFERENCES: OP-101
GP-001

SOURCE: New Significantly Modified **X** Modified/Direct

Bank Number GP-001-03 004

JUSTIFICATION:

a. Plausible since given seal ΔP limit is close to actual limit of 210 psid. RCP must be tripped immediately.

b. **CORRECT** RCP operation is only permitted if #1 Seal ΔP is maintained above 210 psid. RCP must be immediately tripped.

c. Plausible since RCP must be tripped immediately. Trip is based upon 210 psid, not low RCS pressure.

d. Plausible since this is the normal run time for RCPs during venting. RCP is required to be tripped due to 210 psid.

DIFFICULTY:
Comprehensive/Analysis **X** Memory Rating 3

Application of RCP minimum operating criteria to plant conditions.

REFERENCES SUPPLIED: NONE

	INIT 1ST RUN	INIT 2ND RUN

NOTE: Minimum RCS pressure for starting an RCP is 325 psig, however, operation may continue when RCS pressure is less than 325 psig provided the No. 1 seal ΔP remains above 210 psid. The upper limit for RCS pressure in this mode is 400 psig as established by the LTOP System setpoint.

5.5.26 Verify RCS pressure is between 325 psig and 360 psig **AND** record pressure below.

1ST RUN System Pressure _____psig ___

2ND RUN System Pressure _____psig ___

CAUTION

To avoid forming a frothy mixture, do not operate an RCP for time periods longer than 30 seconds. If the No. 1 seal leakoff decreases below the minimum value determined in OP-101 or the No. 1 seal ΔP decreases below 210 psid, the RCP should be tripped immediately. If a decrease of the No. 1 seal ΔP to below 210 psid is expected, the RCP should be tripped as soon as practical to minimize coastdown time with less than 210 psid.

5.5.27 Perform the following:

1. Notify personnel to stand clear of the RCS Vent System CV atmosphere standpipe located on the PZR cubicle on the third level of the CV. ___ ___

2. **IF** this is the 1st RUN venting sequence, **THEN** notify RC Supervisor that crud bursts could occur due to RCP operation and increased radiation levels should be expected in the RCP Pump Bays, Pipe Alley and the Reactor Coolant Filter area. (ACR 93-267)

   _ _____ ___ N/A
   RC Contact (Print name)

4.2.3 (Continued)

TABLE 1
RCP Operating Limits

PARAMETER	NORMAL	MINIMUM	MAXIMUM	INDICATOR	INDICATOR LOCATION
RCS Press	2235 psig	(1)	2485 psig	PI-403	RTGB
VCT Press	30 psig	15 psig	75 psig (2)	PI-117	RTGB
No. 1 Seal dp	2170-2220 psid	2150 psid (3)	2300 psid (4)	PI-154A PI-155A PI-156A	RTGB
Seal Injection Flow	8-13 gpm	6 gpm	20 gpm	FI-124 FI-127 FI-130	Charging Pump Room
No. 1 Seal Leakoff Flow	1-5 gpm (5)	0.8 gpm (6)	6 gpm (7)	FR-154A WR FR-154B NR (FT-154A, B) (FT-155A, B) (FT-156A, B)	RTGB

(1) The minimum RCS pressure for starting an RCP is 325 psig. The minimum requirement for operating an RCP is to maintain at least 210 psid on the No. 1 Seal. The minimum RCS pressure necessary to maintain 210 psid on the No. 1 Seal is equal to the sum of VCT pressure plus 210.

(2) The maximum VCT pressure is limited to 75 psig due to the VCT relief valve setting. However, the maximum VCT pressure for RCP operation during normal conditions is 80 psig and during transient conditions is 100 psig.

(3) The minimum No. 1 Seal dp, when not at normal temperature and pressure, is 210 psid. No. 1 Seal dp equals RCS pressure minus VCT pressure.

(4) The maximum dp for transient conditions is 2470 psid.

(5) If No. 1 Seal leakoff flow is outside the normal range, but within the minimum and maximum values, RCP and seal parameters should be monitored and RESS should be notified to contact Westinghouse.

(6) For operating conditions other than normal temperature and pressure, the minimum No. 1 Seal Leakoff Flow decreases with No. 1 Seal dp, down to an absolute minimum of 0.2 gpm. Table 2 in Section 5.1 provides the minimum No. 1 Seal Leakoff Flow vs No. 1 Seal dp correlation.

(7) If No. 1 Seal leakoff flow is between 6 gpm and 10 gpm and the high leakoff flow is caused by the seal ring not being fully seated, Section 8.1 provides instructions for starting an RCP.

GP-001-03 004

After starting RCP "B" during the 1st RCS venting run, the following plant parameters are observed;

RCS pressure decreased to 250 psig, RCP "B" #1 Seal Delta P decreased to 215 psid.

Which ONE (1) of the following statements best describes what should be done?

A. RCS pressure is less than 325 psig, trip RCP "B".

✓B. RCP "B" can continue to run as long as #1 Seal Delta P stays above 210 psid.

C. RCP "B" can continue to run as long as no evidence of a frothy mixture is present.

D. #1 Seal DeltaP must be kept > 220 psid during venting operations, trip RCP "B".

Question: 81

Given the following plant conditions:

- Maintenance has been performed on the CCW system.
- All CCW pumps are secured.

Which ONE (1) of the following provides the correct method for the initial start of the first Component Cooling Water pump?

a. Rack in the breaker and replace the pump's control power fuses

b. Once the breaker has been racked in and the control power fuses replaced, place the RTGB control switch in the START position

c. Rack in the breaker and replace the pump's control power fuses, place its RTGB switch in the STOP position, then release the switch and verify the pump starts

d. Rack in the breaker, hold the RTGB switch in the STOP position and replace the pump's control power fuses, then place the control switch in the START position

Answer:

d. Rack in the breaker, hold the RTGB switch in the STOP position and replace the pump's control power fuses, then place the control switch in the START position

QUESTION NUMBER: 81
TIER/GROUP: 2/3

K/A: 008A4.04
Ability to manually operate and/or monitor in the control room: Startup of a CCW pump when the system is shut down.

K/A IMPORTANCE: RO 2.6

10CFR55 CONTENT: 55.41(b) RO 10

OBJECTIVE: CCW-08
Explain the component operation associated with each switch position for the CCW System switches and controls.

REFERENCES: OP-306

SOURCE: New Significantly Modified Modified/Direct **X**

Bank Number CCW-08 002

JUSTIFICATION:

a. Plausible since this would result in a pump auto-start on a low pressure signal. Not the prescribed method for starting.

b. Plausible since this would result in a pump auto-start on a low pressure signal. Not the prescribed method for starting.

c. Plausible since this would initially result in a pump start. Pump would then stop when taken to stop position. Not the prescribed method.

d. **CORRECT** Auto-start is defeated by placing hand switch in stop prior to installing fuses. Placing in start will cause pump to start under control of operator.

DIFFICULTY:
Comprehensive/Analysis Memory **X** Rating 3

Knowledge of procedural requirements for starting a pump in a shutdown system.

REFERENCES SUPPLIED: NONE

5.1.2 (Continued) INIT

NOTE: When no CCW Pumps are running, there exists an auto start signal to all pumps due to low discharge header pressure. Auto start on low pressure may be locked out by placing the control switch in the STOP position with the low pressure alarm locked in. After one pump is running, this signal will not exist if sufficient pressure is being delivered by the running pump.

3. IF CCW PUMP "B" or "C" is the first CCW Pump to be started, THEN perform the following:

CAUTION

When placing fuses in the Component Cooling Pump breaker that is to be started first, the Control Operator must hold that pump's START-STOP switch in the STOP position to prevent an auto pump start on low header pressure. This action will also lock out the auto start on low pressure so the pump will not start when the switch is returned to the AUTO position.

a. Perform the following:

1) IF CCW PUMP "B" is to be started, THEN verify Attachment 9.4, CCW Pump "B" Prestart Checklist is complete. (CR 95-01353) ____

2) IF CCW PUMP "C" is to be started, THEN verify Attachment 9.5, CCW Pump "C" Prestart Checklist is complete. (CR 95-01353) ____

b. Rack in the breaker for the CCW Pump to be started first.

CCW PUMP "B" Bus E-1, 52/22C ____

CCW PUMP "C" Bus E-2, 52/26C ____

5.1.2.3 (Continued) INIT

c. Hold the START-STOP Switch in the STOP position for the CCW Pump to be started first. CCW PUMP "B" ____

CCW PUMP "C" ____

d. Install the fuses in the CCW Pump breaker that was racked in. CCW PUMP "B" ____

CCW PUMP "C" ____

e. Release the START-STOP switch for the CCW Pump to be started first. CCW PUMP "B" ____

CCW PUMP "C" ____

f. Momentarily place the START-STOP switch in the START position for the CCW Pump to be started first. CCW PUMP "B" ____

CCW PUMP "C" ____

4. IF CCW PUMP "A" is the first CCW Pump to be started, THEN perform the following:

CAUTION

When racking in CCW PUMP "A" breaker, the Control Operator must hold CCW PUMP "A" START-STOP switch in the STOP position to prevent an auto pump start on low header pressure. This action will also lock out the auto start on low pressure so the pump will not start when the switch is returned to the AUTO position.

a. Verify Attachment 9.3, CCW Pump "A" Prestart Checklist is complete. (CR 95-01353) ____

Question: 81

Given the following plant conditions:

- Maintenance has been performed on the CCW system.
- All CCW pumps are secured.

Which ONE (1) of the following provides the method for the initial start of the first Component Cooling Water pump?

a. Rack in the breaker and replace the pump's control power fuses

b. Once the breaker has been racked in and the control power fuses replaced, place the RTGB control switch in the START position

c. Rack in the breaker and replace the pump's control power fuses, place its RTGB switch in the STOP position, then release the switch and verify the pump starts

d. Rack in the breaker, hold the RTGB switch in the STOP position and replace the pump's control power fuses, then place the control switch in the START position

Answer:

d. Rack in the breaker, hold the RTGB switch in the STOP position and replace the pump's control power fuses, then place the control switch in the START position

QUESTION NUMBER: 81
TIER/GROUP: 2/3

K/A: 008A4.04
Ability to manually operate and/or monitor in the control room: Startup of a CCW pump when the system is shut down.

K/A IMPORTANCE: RO 2.6

10CFR55 CONTENT: 55.41(b) RO 10

OBJECTIVE: CCW-08
Explain the component operation associated with each switch position for the CCW System switches and controls.

REFERENCES: OP-306

SOURCE: New Significantly Modified Modified/Direct **X**

Bank Number CCW-08 002

JUSTIFICATION:

a. Plausible since this would result in a pump auto-start on a low pressure signal. Not the prescribed method for starting.

b. Plausible since this would result in a pump auto-start on a low pressure signal. Not the prescribed method for starting.

c. Plausible since this would initially result in a pump start. Pump would then stop when taken to stop position. Not the prescribed method.

d. **CORRECT** Auto-start is defeated by placing hand switch in stop prior to installing fuses. Placing in start will cause pump to start under control of operator.

DIFFICULTY:
Comprehensive/Analysis Memory **X** Rating 3

Knowledge of procedural requirements for starting a pump in a shutdown system.

REFERENCES SUPPLIED: NONE

Question: 82

In EPP-007, "SI Termination", which ONE (1) of the following are the bases for the SW pressure being >40 psig?

a.
- Prevent SW Pump runout, **AND**
- Provide adequate backup to AFW Pump supply

b.
- Prevent SW Pump runout, **AND**
- Provide adequate EDG cooling

c.
- Provide adequate EDG cooling, **AND**
- Provide cooling to Turbine Building loads

d.
- Provide adequate backup to AFW Pump supply, **AND**
- Provide cooling to Turbine Building loads

Answer:

b.
- Prevent SW Pump runout, **AND**
- Provide adequate EDG cooling

QUESTION NUMBER: 82
TIER/GROUP: 1/2

K/A: WE02EK1.1
Knowledge of the operational implications of the following concepts as they apply to SI Termination: Components, capacity, and function of emergency systems.

K/A IMPORTANCE: RO 3.2

10CFR55 CONTENT: 55.41(b) RO 10

OBJECTIVE: EPP-007-03
Demonstrate an understanding of selected steps, cautions, and notes in EPP-7 by explaining the basis of each.

REFERENCES: EPP-7
EPP-7 Basis

SOURCE: New Significantly Modified Modified/Direct X

Bank Number EPP-007-03 005

JUSTIFICATION:

a. Plausible since 40 psig is maintained to ensure pump runout does not occur. AFW pump supply backup does not require 40 psig.

b. CORRECT 40 psig ensures pump runout does not occur and ensures adequate SW pressure is available to cool and running EDGs.

c. Plausible since 40 psig is maintained to ensure EDG cooling is maintained. TB loads are isolated on the Safety Injection.

d. Plausible since 40 psig is above the low pressure isolation for the TB loads. AFW pump supply backup does not require 40 psig and TB loads are isolated on the Safety Injection.

DIFFICULTY:
Comprehensive/Analysis Memory X Rating 2

Knowledge of basis for ERG procedural directions.

REFERENCES SUPPLIED: NONE

RNP DIFFERENCES/REASONS

This steps is based on NED calculations RNP-M/MECH-1128 and RNP-M/MECH-1519. The intent of the steps is to assure cooling water supply to the Emergency Diesels at the same time assuring that the SW pump (or pumps) do not experience runout. Of primary concern is an event in which only one SW pump is running following a blackout. With the completion of ESR 97-00520, this will no longer be a credible event, however the steps will remain in the procedure in the event that multiple failures occur. It is expected that under this condition, if operator action is not taken, the Emergency Diesel Generators will overheat and trip. The above referenced calculations assumed that actions were taken to start a second pump within 10 minutes to prevent loss of the EDG. The second calculation determined that, as long as SW pressure was greater than 25 psig, runout would not occur. If pressure was greater than 33 psig EDG cooling was assured, therefore, the calculation recommended 36 psig for conservatism. 40 psig was chosen for the procedure to provide conservatism and to coincide with the normal low end of the operating band for this system.

The upper end of the pressure band has been assigned as 50 psig to prevent the pumps from entering an instability region that occurs on the pump operating curve at low flow and high head. The calculations assume worst case cooling scenarios for hot water which would require higher flows for cooling. During winter months, flow conditions are low with normally only two pumps running. Should a blackout occur in the winter with automatic pump start, it is likely that pressure will be high. The step will check for both high and low pressure.

The steps will attempt to restore pressure by starting additional SW pumps. If starting additional pumps is not possible, or does not restore system pressure, the operator will be routed to the RNO step which isolates the Turbine Building. Isolation of the Turbine Building is not performed until after attempting to start pumps in order to prevent damage to components on the secondary which are cooled by SW.

If isolation of the Turbine Building is unsuccessful, the operator will be directed to subsequent steps to throttle the outlets of the CCW Heat Exchangers. If successful, the operator is routed to the next high level step.

Isolation of the A CCW Heat Exchanger and throttling of the SW outlet of the B CCW Heat Exchanger is accomplished last. The calculations referenced above state that SW would be restored with only one pump in service as long as the Turbine Building and one CCW Heat Exchanger was isolated.

Instructions are provided for unisolating the pressure gauges at the outlet of the Heat Exchangers. These gauges are normally isolated because the lines downstream of the isolation valve are non-Q.

SSD DETERMINATION

This is an SSD per criterion 10.

3 N/A WOG BASIS

N/A, this step is plant specific.

RNP DIFFERENCES/REASONS

This step addresses isolation and shutdown of secondary systems if SW to turbine building was isolated in the previous step.

SSD DETERMINATION

This is an SSD per criterion 3.

5 N/A WOG BASIS

N/A, this step is plant specific.

STEP	INSTRUCTIONS	RESPONSE NOT OBTAINED
4.	Throttle CCW Heat Exchanger Outlet As Follows:	
	a. Check CCW Heat Exchanger B - IN SERVICE	a. Throttle CCW Heat Exchanger A outlet as follows: 1) Open SW-271, ROOT VALVE PI-1619A. 2) Close SW-740, CCW HEAT EXCHANGER B RETURN. 3) Throttle SW-739, CCW HEAT EXCHANGER "A" RETURN, to establish 40 psig to 50 psig SW Header pressure as indicated on PI-1619A. 4) Close SW-271, ROOT VALVE PI-1619A. 5) Go To Step 5.
	b. Throttle CCW Heat Exchanger B Outlet as follows: 1) Open SW-260, ROOT VALVE PI-1619B 2) Close SW-739, CCW HEAT EXCHANGER A RETURN 3) Throttle SW-740, CCW HEAT EXCHANGER "B" RETURN, To establish 40 psig to 50 psig SW Header pressure as indicated on PI-1619B 4) Close SW-260, ROOT VALVE PI-1619B	
5.	Check DC Busses A <u>AND</u> B - ENERGIZED	Go To the appropriate procedure: • DC Bus A - EPP-26, LOSS OF DC BUS "A" • DC Bus B - EPP-27, LOSS OF DC BUS "B"

RNP DIFFERENCES/REASONS

This steps is based on NED calculations RNP-M/MECH-1128 and RNP-M/MECH-1519. The intent of the steps is to assure cooling water supply to the Emergency Diesels at the same time assuring that the SW pump (or pumps) do not experience runout. Of primary concern is an event in which only one SW pump is running following a blackout. With the completion of ESR 97-00520, this will no longer be a credible event, however the steps will remain in the procedure in the event that multiple failures occur. It is expected that under this condition, if operator action is not taken, the Emergency Diesel Generators will overheat and trip. The above referenced calculations assumed that actions were taken to start a second pump within 10 minutes to prevent loss of the EDG. The second calculation determined that, as long as SW pressure was greater than 25 psig, runout would not occur. If pressure was greater than 33 psig EDG cooling was assured, therefore, the calculation recommended 36 psig for conservatism. 40 psig was chosen for the procedure to provide conservatism and to coincide with the normal low end of the operating band for this system.

The upper end of the pressure band has been assigned as 50 psig to prevent the pumps from entering an instability region that occurs on the pump operating curve at low flow and high head. The calculations assume worst case cooling scenarios for hot water which would require higher flows for cooling. During winter months, flow conditions are low with normally only two pumps running. Should a blackout occur in the winter with automatic pump start, it is likely that pressure will be high. The step will check for both high and low pressure.

The steps will attempt to restore pressure by starting additional SW pumps. If starting additional pumps is not possible, or does not restore system pressure, the operator will be routed to the RNO step which isolates the Turbine Building. Isolation of the Turbine Building is not performed until after attempting to start pumps in order to prevent damage to components on the secondary which are cooled by SW.

If isolation of the Turbine Building is unsuccessful, the operator will be directed to subsequent steps to throttle the outlets of the CCW Heat Exchangers. If successful, the operator is routed to the next high level step.

Isolation of the A CCW Heat Exchanger and throttling of the SW outlet of the B CCW Heat Exchanger is accomplished last. The calculations referenced above state that SW would be restored with only one pump in service as long as the Turbine Building and one CCW Heat Exchanger was isolated.

Instructions are provided for unisolating the pressure gauges at the outlet of the Heat Exchangers. These gauges are normally isolated because the lines downstream of the isolation valve are non-Q.

SSD DETERMINATION

This is an SSD per criterion 10.

3 N/A WOG BASIS

N/A, this step is plant specific.

RNP DIFFERENCES/REASONS

This step addresses isolation and shutdown of secondary systems if SW to turbine building was isolated in the previous step.

SSD DETERMINATION

This is an SSD per criterion 3.

5 N/A WOG BASIS

N/A, this step is plant specific.

RNP STEP	WOG STEP	BASIS/DIFFERENCES
		RNP DIFFERENCES/REASONS The EPP adds this step in order to restore the DC Busses, if necessary, prior to checking if AC Busses are energized. DC power is necessary for control of breakers. The RNP EOPs contain a loss of DC procedure that transitions to EPP-7. This procedure is not part of the WOG ERGs. SSD DETERMINATION This is an SSD per criterion 10.
6	N/A	WOG BASIS N/A, this step is plant specific. RNP DIFFERENCES/REASONS The EPP provides this step to check for adequate EDG cooling. If the EDGs cannot be adequately cooled, the step shuts them down. This step is required as part of the SW system operating characteristics described earlier. SSD DETERMINATION This is an SSD per criterion 3.
C7	N/A	WOG BASIS N/A, this step is plant specific. RNP DIFFERENCES/REASONS The EPP adds this Caution to remind the operators of the limitations of the station batteries. The station batteries are rated for 1 hour without charger operation. SSD DETERMINATION This is an SSD per criterion 10.
7-9	19	WOG BASIS PURPOSE: To ensure that all ac service busses are energized BASIS: If any busses in the plant are not energized, then it is possible that some items of non-safeguards equipment might need to be powered from the emergency busses to facilitate long-term recovery. RNP DIFFERENCES/REASONS The steps accomplish the same objective. The EPP provides detailed instructions in the RNO as directed by the ERG. The ERG step is moved forward in the procedure in order to have the AC Busses powered from offsite power sooner, if possible. The EPP step has been split into three steps in order to prevent run-on steps from crossing page boundaries. SSD DETERMINATION This is an SSD per criterion 4.
10	N/A	WOG BASIS N/A, this step is plant specific.

Question: 82

In EPP-007, "SI Termination", Which ONE (1) of the following is why the DC Busses are checked energized prior to checking the AC Busses?

a. DC control power is necessary for AC Bus breaker operation

b. The low voltage busses are always required to be energized first

c. Control of EDGs is required prior to energizing the AC Busses and DC power is required for EDG speed and voltage control

d. To ensure the Main Turbine Emergency Oil Pump is running prior to energizing the Turning Gear

NOT PLAUSIBLE

NO DISCRIMINATING VALUE

Answer:

a. DC control power is necessary for AC Bus breaker operation

QUESTION NUMBER: 82
TIER/GROUP: 1/2

K/A: WE02EK1.1
Knowledge of the operational implications of the following concepts as they apply to SI Termination: Components, capacity, and function of emergency systems.

K/A IMPORTANCE: RO 3.2

10CFR55 CONTENT: 55.41(b) RO 10

OBJECTIVE: EPP-007-03
Demonstrate an understanding of selected steps, cautions, and notes in EPP-7 by explaining the basis of each.

REFERENCES: EPP-7
EPP-7 Basis

SOURCE: New Significantly Modified Modified/Direct **X**

Bank Number EPP-007-03 006

JUSTIFICATION:

a. **CORRECT** AC breaker operation requires control power which is supplied by DC power.
b. Plausible since it would be desirable, if possible, to energize low voltage buses to allow control. DC supplies control power for AC breakers.
c. Plausible since DC power supplies these loads. Procedurally, DC is checked to ensure control power is available for AC breakers.
d. Plausible since DC power supplies these loads. Procedurally, DC is checked to ensure control power is available for AC breakers.

DIFFICULTY:
Comprehensive/Analysis Memory **X** Rating 2

Knowledge of basis for ERG procedural directions.

REFERENCES SUPPLIED: NONE

Question: 82

In EPP-007, "SI Termination", which ONE (1) of the following are the bases for the SW pressure being >40 psig?

a.
- Prevent SW Pump runout, **AND**
- Provide adequate backup to AFW Pump supply

b.
- Prevent SW Pump runout, **AND**
- Provide adequate EDG cooling

c.
- Provide adequate EDG cooling, **AND**
- Provide cooling to Turbine Building loads

d.
- Provide adequate backup to AFW Pump supply, **AND**
- Provide cooling to Turbine Building loads

Answer:

b ~~a.~~
- Prevent SW Pump runout, **AND**
- Provide adequate EDG cooling

Question: 83

Given the following plant conditions:

- The plant is shutdown for a refueling outage.
- Complete core off-load to the SFP is in progress.
- The SFP Fuel Handling RO reports that SFP water temperature is 153°F.

Which ONE (1) of the following actions, if any, is required?

a. Immediately stop the core off-load until the SFP temperature is decreased to < 125°F

b. Commence transferring fuel assemblies back to the core

c. Monitor SFP water temperature at least once per hour

d. **NO** action is required since SFP temperature is within limits for plant conditions

Answer:

b. Commence transferring fuel assemblies back to the core

QUESTION NUMBER: 83
TIER/GROUP: 2/2

K/A: 033G2.2.28
Knowledge of new and spent fuel movement. (Spent Fuel Pool Cooling)

K/A IMPORTANCE: RO 2.6

10CFR55 CONTENT: 55.41(b) RO 7

OBJECTIVE: SFP-13
State the Technical Specification Limitations and explain the bases for the spent fuel pit.

REFERENCES: TRMS 3.14
GP-010

SOURCE: New Significantly Modified Modified/Direct **X**

Bank Number SFP-13 002

JUSTIFICATION:

a. Plausible since 125 °F is trigger for monitoring SFP temperature on hourly basis. Fuel transfer to containment is required.

b. **CORRECT** Fuel assemblies are immediately transferred back to the containment if SFP temperature exceeds 150 °F.

c. Plausible since this is required when SFP temperature exceeds 125 °F. Fuel transfer to containment is required.

d. Plausible since SFP temperature is expected to be elevated during core offload. Fuel transfer to containment is required.

DIFFICULTY:
Comprehensive/Analysis Memory **X** Rating 3

Knowledge of refueling Tech Spec requirements.

REFERENCES SUPPLIED: NONE

5.11 A Fuel Handling licensed Operator shall be stationed in the Spent Fuel Building during Fuel Handling evolutions in the SFP.

5.12 The Manipulator Crane Operator shall not unlatch from Fuel Assemblies which have been installed in the Core until directed to do so by the Refueling SRO.

5.13 Access to the Refueling work stations shall be limited to members of the Refueling team, and observers approved by the SSO.

5.14 During the discharge of a full core into the SFP, the temperature of the SFP water shall be maintained at or below 150°F. The SFP water temperature shall be monitored once each shift when the temperature is at or below 125°F. If the temperature exceeds 125°F, it shall be monitored hourly. If the SFP temperature reaches 150°F, Fuel Assemblies will be transferred back to the CV to reduce the pool temperature below 150°F. (TRMS 3.14)

5.15 The SFP water temperature shall not be allowed to decrease below 68°F. The SFP structure analysis temperature limits, described in UFSAR Section 3.8 and 9.1, requires the temperature to be maintained greater than 68°F. SER 90-17 discussed potential SFP criticality impacts of failure to maintain temperature within limits, but RNP does not have temperature restrictions due to criticality assumptions used in EMF-94-113.

5.16 During Refueling operations, RCS temperature shall be maintained less than or equal to 140°F. (TRM 1.1)

5.17 Core Alteration is defined in ITS Section 1.0 as movement of any fuel, sources or reactivity control components, within the Reactor Vessel with the vessel head removed and fuel in the vessel. MODE 6 is defined in ITS Section 1.0 to be any time one or more Reactor Vessel Head closure bolts are less than full tensioned.

5.18 Special attention shall be paid to the possibility of radiation streaming through hollow sections of handling tools, when using handling tools that do not have flood and drain holes. (NRC Info Notice 90-33)

5.19 The principles of ALARA shall be used in planning and performing work and operations in the Radiation Control Area.

3.14 SPENT FUEL POOL WATER TEMPERATURE

TRMS 3.14 (CTS 3.8.3) The temperature of the spent fuel pool water shall be maintained < 150°F.

APPLICABILITY: During discharge of a full core to the spent fuel pit.

COMPENSATORY MEASURES

CONDITION	REQUIRED COMPENSATORY MEASURE	COMPLETION TIME
A. Spent fuel pool water temperature ≥ 150°F.	A.1 Initiate action to reduce spent fuel pool water temperature to < 150°F by transferring fuel assemblies back to containment.	Immediately

TEST REQUIREMENTS

TEST	FREQUENCY
TR 3.14.1 (CTS 3.8.3) Verify spent fuel pool water temperature is < 150°F.	1 hour when spent fuel pool water temperature is > 125°F AND 12 hours when spent fuel pool water temperature is ≤ 125°F

Question: 83

Given the following plant conditions:

- The plant is shutdown for a refueling outage.
- Complete core off-load to the SFP is in progress.
- The SFP Fuel Handling RO reports that SFP water temperature is 153°F.

Which ONE (1) of the following is the action~~s~~, if any, is required?

a. Immediately stop the core off-load until the SFP temperature is decreased to < 125°F

b. Commence transferring fuel assemblies back to the core

c. Monitor SFP water temperature at least once per hour

d. **NO** action is required since SFP temperature is within limits for plant conditions

Answer:

b. Commence transferring fuel assemblies back to the core

QUESTION NUMBER: 83
TIER/GROUP: 2/2

K/A: 033G2.2.28
Knowledge of new and spent fuel movement. (Spent Fuel Pool Cooling)

K/A IMPORTANCE: RO 2.6

10CFR55 CONTENT: 55.41(b) RO 7

OBJECTIVE: SFP-13
State the Technical Specification Limitations and explain the bases for the spent fuel pit.

REFERENCES: TRMS 3.14
GP-010

SOURCE: New Significantly Modified Modified/Direct **X**

Bank Number SFP-13 002

JUSTIFICATION:

a. Plausible since 125 °F is trigger for monitoring SFP temperature on hourly basis. Fuel transfer to containment is required.

b. **CORRECT** Fuel assemblies are immediately transferred back to the containment if SFP temperature exceeds 150 °F.

c. Plausible since this is required when SFP temperature exceeds 125 °F. Fuel transfer to containment is required.

d. Plausible since SFP temperature is expected to be elevated during core offload. Fuel transfer to containment is required.

DIFFICULTY:
Comprehensive/Analysis Memory **X** Rating 3

Knowledge of refueling Tech Spec requirements.

REFERENCES SUPPLIED: NONE

Question: 85

Given the following conditions:

- A batch release of Waste Condensate Tank 'E' is scheduled to be performed.
- The Waste Condensate Recirc Pump is out-of-service.

Waste Condensate Tank 'E' ...

a. can be recirculated after transferring to Waste Condensate Tank 'C'.

b. **CANNOT** be recirculated unless transferred to Waste Condensate Tank 'D'.

c. can be recirculated using Waste Condensate Pump 'B'.

d. **CANNOT** be recirculated until the Waste Condensate Recirc Pump is repaired.

Answer:

d. **CANNOT** be recirculated until the Waste Condensate Recirc Pump is repaired.

QUESTION NUMBER: 85
TIER/GROUP: 2/1

K/A: 068A2.02
Ability to (a) predict the impacts of the following malfunctions or operations on the Liquid Radwaste System ; and (b) based on those predictions, use procedures to correct, control, or mitigate the consequences: Lack of tank recirc prior to release

K/A IMPORTANCE: RO 2.7

10CFR55 CONTENT: 55.41(b) RO 13

OBJECTIVE: WD-03
Describe the major flow path(s) through the Waste Disposal System. Liquid Waste Disposal

REFERENCES: SD-023

SOURCE: New **X** Significantly Modified Modified/Direct

Bank Number NEW

JUSTIFICATION:

a. Plausible since 2 Waste Condensate Tanks use their individual pumps to recirc the tank. Waste Condensate Tanks with this capability are 'A' and 'B'.

b. Plausible since transferring contents of Waste Condensate Tank 'E' to a different tank would allow use of Waste Condensate Pump 'C' or 'D' for discharge. Waste Condensate Tanks 'C', 'D', and 'E' must use the Waste Condensate Recirc Pump.

c. Plausible since either Waste Condensate Tank 'A' or 'B' can be recirculated with either Waste Condensate Pump 'A' or 'B'. Waste Condensate Tanks 'C', 'D', and 'E' must use the Waste Condensate Recirc Pump.

d. **CORRECT** Waste Condensate Tanks 'C', 'D', and 'E' can only be recirculated using Waste Condensate Recirc Pump.

DIFFICULTY:
Comprehensive/Analysis **X** Memory Rating 3

Comprehension of system operations to determine acceptable alternative flowpaths.

REFERENCES SUPPLIED: NONE

WASTE CONDENSATE TANKS

WD-FIGURE-6 (Rev . 0b)

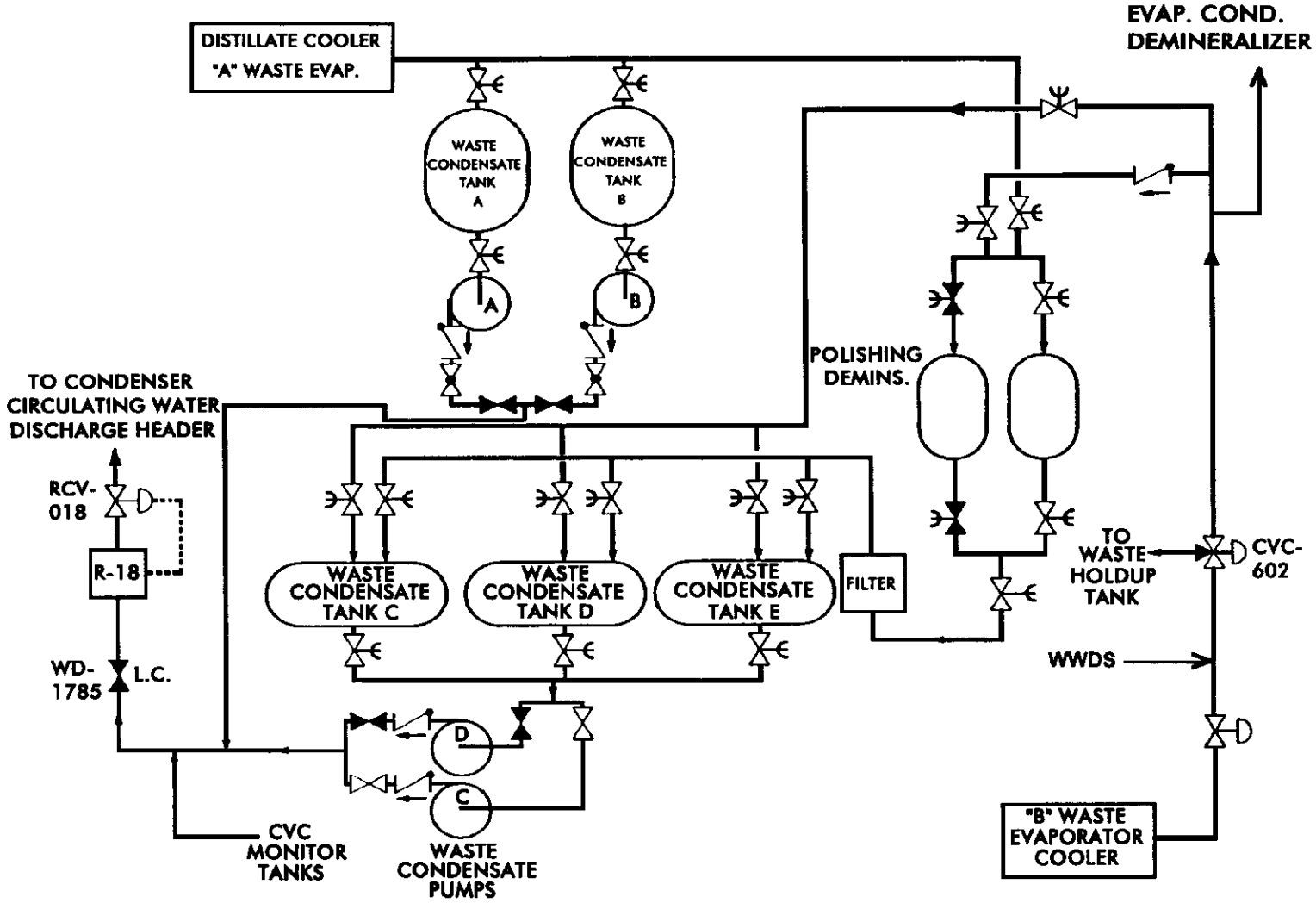

INFORMATION USE ONLY

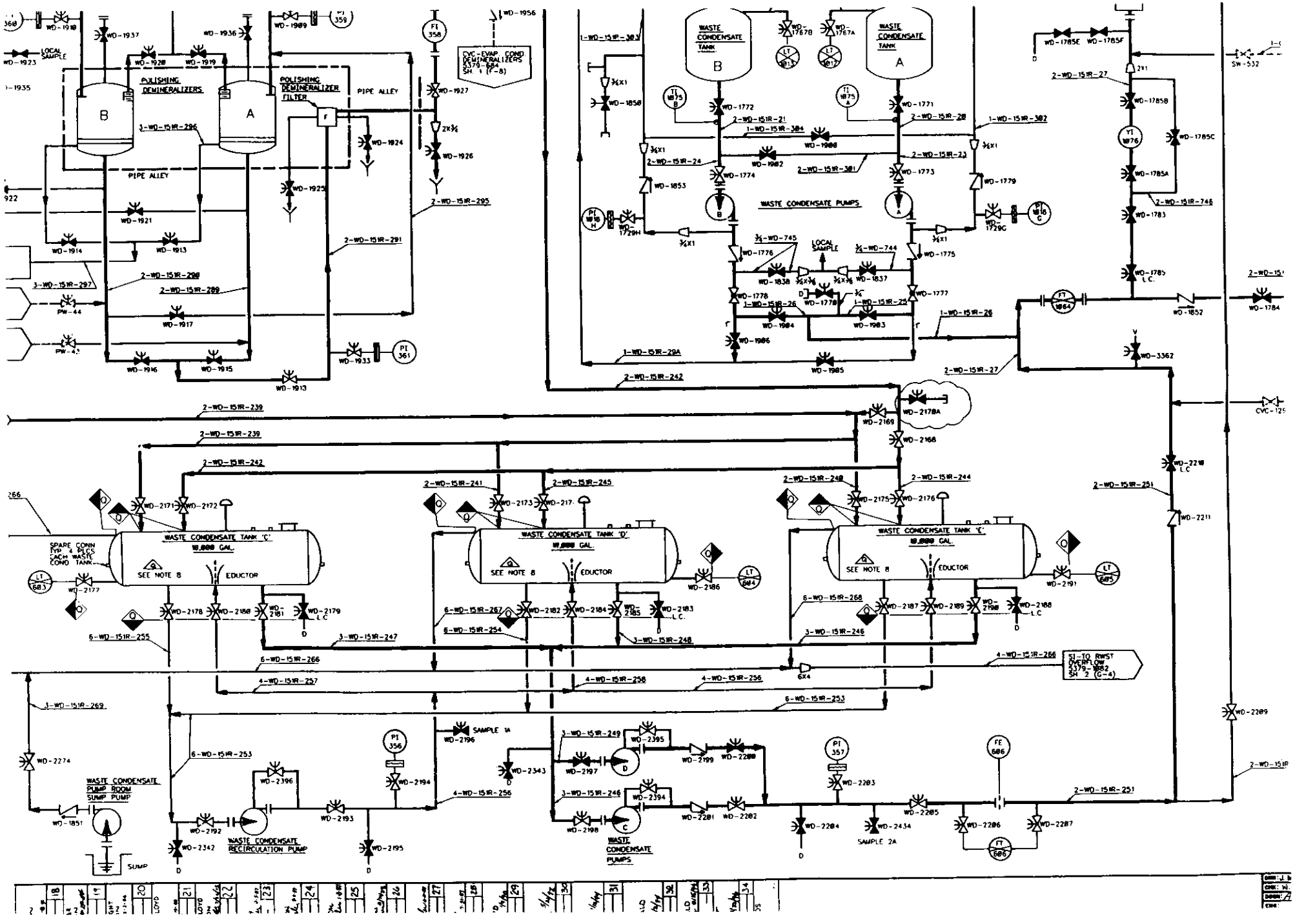
POLISHING DEMINERALIZERS
POLISHING DEMINERALIZER FILTER
PIPE ALLEY
LOCAL SAMPLE
CVC-EVAP COND DEMINERALIZERS X379-684 SH. 1 (F-8)
WASTE CONDENSATE TANK B
WASTE CONDENSATE TANK A
WASTE CONDENSATE PUMPS
WASTE CONDENSATE TANK 'C'
WASTE CONDENSATE TANK 'D'
WASTE CONDENSATE TANK 'E'
SEE NOTE 8
EDUCTOR
SPARE CONN TYP 4 PLCS EACH WASTE COND TANK
SJ-TO RWST OVERFLOW X379-1082 SH. 2 (G-4)
WASTE CONDENSATE PUMP ROOM SUMP PUMP
SUMP
WASTE CONDENSATE RECIRCULATION PUMP
WASTE CONDENSATE PUMPS
SAMPLE 1A
SAMPLE 2A

Question: 85

Given the following conditions:

- A batch release of Waste Condensate Tank 'E' is scheduled to be performed.
- The Waste Condensate Recirc Pump is out-of-service.

Waste Condensate Tank 'E' ...

a. can be recirculated after transferring to Waste Condensate Tank 'C'.

b. can be recirculated using Waste Condensate Pump 'A'.

c. can be recirculated using Waste Condensate Pump 'B'.

d. **CANNOT** be recirculated until the Waste Condensate Recirc Pump is repaired.

Answer:

d. **CANNOT** be recirculated until the Waste Condensate Recirc Pump is repaired.

[illegible]

QUESTION NUMBER: 85
TIER/GROUP: 2/1

K/A: 068A2.02
Ability to (a) predict the impacts of the following malfunctions or operations on the Liquid Radwaste System ; and (b) based on those predictions, use procedures to correct, control, or mitigate the consequences: Lack of tank recirc prior to release

K/A IMPORTANCE: RO 2.7

10CFR55 CONTENT: 55.41(b) RO 13

OBJECTIVE: WD-03
Describe the major flow path(s) through the Waste Disposal System. Liquid Waste Disposal

REFERENCES: SD-023

SOURCE: New **X** Significantly Modified Modified/Direct

Bank Number NEW

JUSTIFICATION:

a. Plausible since 2 Waste Condensate Tanks use their individual pumps to recirc the tank. Waste Condensate Tanks with this capability are 'A' and 'B'.

b. Plausible since either Waste Condensate Tank 'A' or 'B' can be recirculated with either Waste Condensate Pump 'A' or 'B'. Waste Condensate Tanks 'C', 'D', and 'E' must use the Waste Condensate Recirc Pump.

c. Plausible since either Waste Condensate Tank 'A' or 'B' can be recirculated with either Waste Condensate Pump 'A' or 'B'. Waste Condensate Tanks 'C', 'D', and 'E' must use the Waste Condensate Recirc Pump.

d. **CORRECT** Waste Condensate Tanks 'C', 'D', and 'E' can only be recirculated using Waste Condensate Recirc Pump.

DIFFICULTY:
Comprehensive/Analysis **X** Memory Rating 3

Comprehension of system operations to determine acceptable alternative flowpaths.

REFERENCES SUPPLIED: NONE

SK

Question: 84

Given the following conditions:

- Numerous alarms come in, indicating a Service Water pipe break.
- An operator reports that there is a large break in the SW line supplying the "B" Service Water Booster Pump.

Which ONE (1) of the following sections of AOP-022, "Loss of Service Water," should be addressed?

a. Section A, North Service Water Header Upstream of Check Valve SW-541

b. Section B, South Service Water Header Upstream of Check Valve SW-541

c. Section C, North Service Water Header Downstream of Check Valve SW-541

d. Section D, South Service Water Header Downstream of Check Valve SW-541

Answer:

c. Section C, North Service Water Header Downstream of Check Valve SW-541

QUESTION NUMBER: 84
TIER/GROUP: 1/1

K/A: 062AA2.02
Ability to determine and interpret the following as they apply to the Loss of Nuclear Service Water: The cause of possible SWS loss

K/A IMPORTANCE: RO 2.9

10CFR55 CONTENT: 55.41(b) RO 4

OBJECTIVE: AOP-022-02
Recognize the selected entry level conditions of AOP-022.

REFERENCES: SD-004

SOURCE: New Significantly Modified **X** Modified/Direct

Bank Number AOP-022-05 002

JUSTIFICATION:

a. Plausible since this is a section of AOP-022. Supplied by north header, downstream of check valves.
b. Plausible since this is a section of AOP-022. Supplied by north header, downstream of check valves.
c. **CORRECT** "B" SW Booster Pump is supplied by SW north header, downstream of check valve.
d. Plausible since this is a section of AOP-022. Supplied by north header, downstream of check valves.

DIFFICULTY:
Comprehensive/Analysis Memory **X** Rating 2

System knowledge to determine procedural response.

REFERENCES SUPPLIED: NONE

PSA RELATED

AUXILIARY BUILDING SERVICE WATER

SW_FIGURE_5

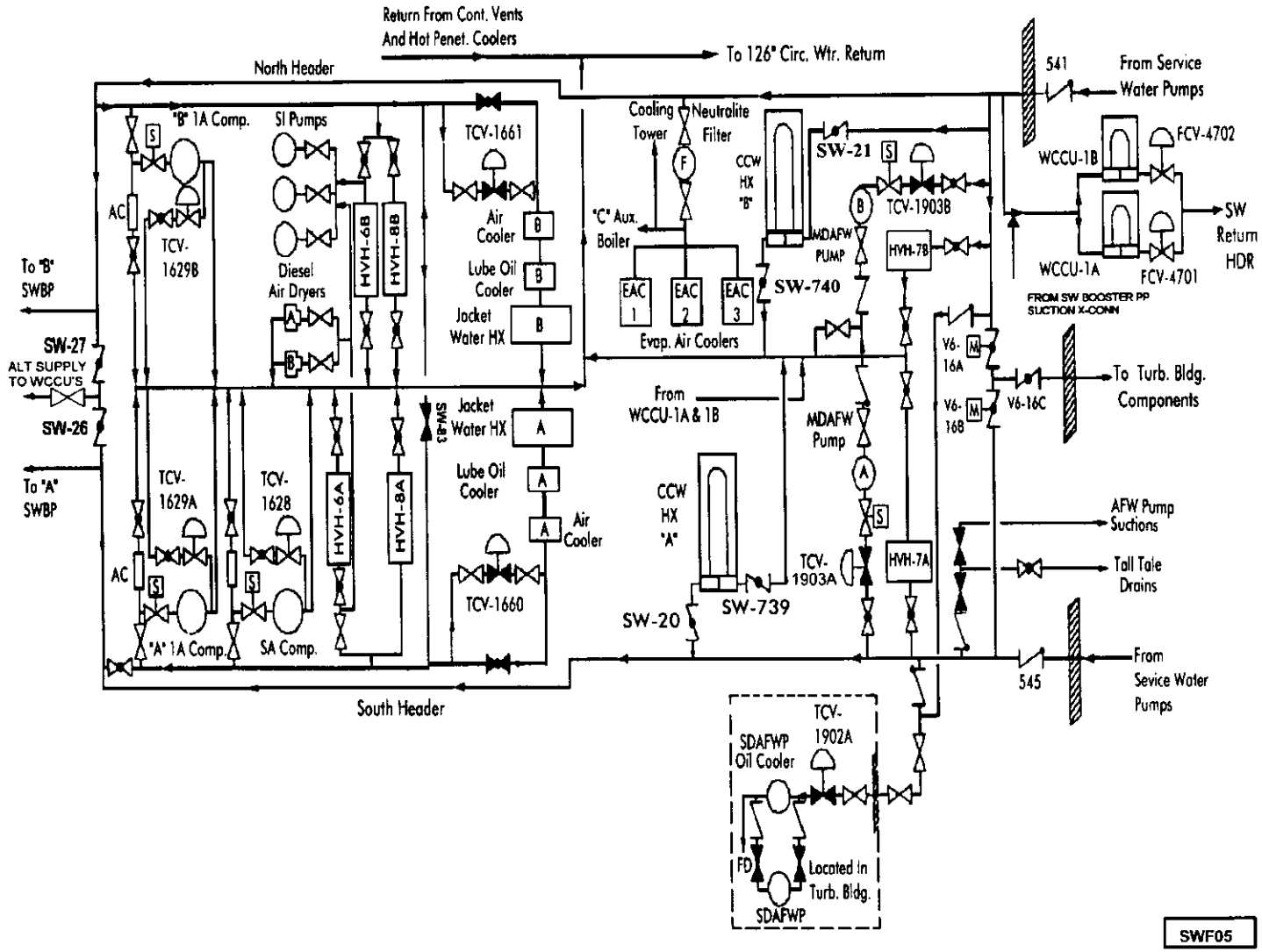

INFORMATION ONLY

AOP-022-05 002
Given the following plant conditions:

- The unit is operating at 100% power
- Annunciators APP-008-E7 "S. SW HDR STRAINER PIT HI LEVEL, and APP-008-F7, "SOUTH SW HDR LO PRESS" come in simultaneously

Which ONE (1) of the following actions is required as an immediate action?

A. Stop "A" and "B" service water pumps

B. Close SW supply to south header valve V6-12A

C. Close SW supply to north header valve V6-12D

✓D. Close SW cross-connect valves V6-12B and V6-12C

OK

Question: 86

Which ONE (1) of the following specifies the minimum requirement needed to classify a Control Rod as "on the bottom" of the core in accordance with OMM-022, Emergency Operating Procedures User's Guide?

a. IRPI channel indicates < 12 inches

b. IRPI channel indicates <20 steps

c. Bank group counter indicates <20 steps

d. Respective rod bottom light ILLUMINATED

Answer:

a. IRPI channel indicates < 12 inches

QUESTION NUMBER: 86
TIER/GROUP: 3

K/A: 2.4.17
Knowledge of EOP terms and definitions.

K/A IMPORTANCE: RO 3.1

10CFR55 CONTENT: 55.41(b) RO 2

OBJECTIVE: OMM-022-03
Demonstrate an understanding of selected steps, cautions, and notes in OMM-022 by explaining the basis of each.

REFERENCES: OMM-022

SOURCE: New Significantly Modified Modified/Direct **X**

Bank Number OMM-022-03 016 **Audit Exam 98-1**

JUSTIFICATION:

a. **CORRECT** Definition of rod on bottom is <12".
b. Plausible since some indication indicates in steps. Definition of rod on bottom is <12".
c. Plausible since some indication indicates in steps. Definition of rod on bottom is <12".
d. Plausible since rod bottom light comes on prior to rod physically being on bottom of core. Definition of rod on bottom is <12".

DIFFICULTY:
Comprehensive/Analysis Memory **X** Rating 3

Knowledge of EOP definitions.

REFERENCES SUPPLIED: NONE

1.1.9 **Recirculation Mode** - When referenced for the current status of the RHR System, the system is aligned to take a suction on the CV Sump and discharge to the loops.

1.1.10 **Redundant** - (In reference to an indication) Having multiple indications of the same type for the same parameter. An example of redundant indication is verification of S/G level using all three narrow range level channels.

1.1.11 **Rod On Bottom** - A Control Rod is defined as "on the bottom" when ARPI indication shows a position of less than or equal to 12". This originates from Westinghouse Documentation ESBU/WOG 96-0080, which defines rod bottom occurring at entry to the dash pot. Dash Pot entry occurs at 20 steps from the bottom which is equal to 12.5". The value is rounded down to the nearest legible increment on the ARPI.

1.1.12 S/G Status:

1. **Ruptured S/G** - Any generator with failed tubes resulting in a loss of the RCS pressure boundary greater than RCS makeup capability.

2. **Faulted S/G** - A faulted S/G is any generator with a steam line or feedwater line break associated with it.

3. **Leaking S/G** - Any generator with failed tubes resulting in a loss of the RCS pressure boundary within RCS makeup capability.

1.1.13 **S/G Level** - Unless otherwise stated, a step which refers to S/G level means narrow range S/G level. A step which requires the use of wide range S/G level will state specifically to use wide range S/G level.

1.1.14 **Stable** - (In reference to a parameter) To be within the normal control band or controllable within some desired range.

1.1.15 **Uncontrolled** - Refers to a condition that is not under the control of the operator and is incapable of being controlled by the operator using available equipment.

Question: 87

Given the following conditions:

- Reactor power is at 40%.
- Rod Control is in MAN.
- TE-144, NON-REGEN HX OUTLET TEMP, has failed high.

Assuming **NO** operator actions, which ONE (1) of the following describes the change in RCS boron and RCS temperature?

	RCS BORON CONCENTRATION	**RCS TEMPERATURE**
a.	Increases	Increases
b.	Increases	Decreases
c.	Decreases	Increases
d.	Decreases	Decreases

Answer:

c.	Decreases	Increases

QUESTION NUMBER: 87
TIER/GROUP: 2/1

K/A: 004K4.10
Knowledge of CVCS design feature(s) and/or interlock(s) which provide for the minimum temperature requirements on borated systems

K/A IMPORTANCE: RO 3.2

10CFR55 CONTENT: 55.41(b) RO 5

OBJECTIVE: CVCS-10
Explain the operation of the CVCS.

REFERENCES: OP-301-1

SOURCE: New Significantly Modified **X** Modified/Direct

Bank Number CVCS-09 022

JUSTIFICATION:

a. Plausible since RCS boron and RCS temperature will respond to the changing letdown temperature. Boron concentration lowers.

b. Plausible since RCS boron and RCS temperature will respond to the changing letdown temperature. Boron concentration lowers.

c. **CORRECT** High failure of temperature element causes increased CCW flow, lowering letdown temperature. Lower temperature in demineralizers causes boron to be absorbed by resins, lowering RCS boron concentration. RCS temperature rises in response.

d. Plausible since RCS boron and RCS temperature will respond to the changing letdown temperature. RCS temperature rises.

DIFFICULTY:
Comprehensive/Analysis **X** Memory Rating 3

Comprehension of temperature changes on ability of demineralizer to retain boron.

REFERENCES SUPPLIED: NONE

PSA RELATED

5.25 The Charging Pump suction stabilizers/separators shall be vented of any noncondensibles prior to starting any of the charging pumps. A vapor bubble should be established and maintained in the steam dome while the Charging Pump is in operation.

5.26 The Charging Pump suction stabilizer/separator heater should be energized on those units whose Charging Pump is operating. All three suction stabilizer/separator heaters may be energized during normal operations. If a Charging Pump is to be removed from service for maintenance, deenergize its suction stabilizer/separator heater prior to closing the pump suction valve.

5.27 Charging pump suction stabilizer relief setpoint (75 psig) may be exceeded when the Volume Control Tank is isolated and the source of makeup is from the boric acid transfer pumps and primary water pumps.

5.28 When more than one Charging Pump is operating, only one Charging Pump should be operated in automatic to prevent the Charging Pumps from "hunting" and causing level swings.

5.29 The following starting duty limitations apply to the Charging Pump motors: (ACR 92-325)

- Maximum number of starts per hour is 4.
- Minimum time between starts is 5 minutes.

5.30 Increasing the letdown temperature to the Mixed Bed Demineralizers can cause the demineralizers to release boron, which will add negative reactivity to the Reactor. Conversely, decreasing letdown temperature to the demineralizers can cause positive reactivity to be added to the Reactor.

5.31 The following starting duty limitations apply to the Boric Acid Transfer Pump motors: (ACR 92-325)

- Maximum number of starts per hour is 13.
- Minimum time between starts is 3 minutes.

5.32 Normal Seal Injection flow should be maintained at 8 to 13 gpm, however the minimum Seal Injection flow is 6 gpm and the maximum Seal Injection flow is 20 gpm. (ACR 94-01811) ITS LCO 3.4.17 requires seal injection flow of $\geq$ 6 gpm to each RCP when in MODES 1, 2, 3, and 4.

CVCS-09 022

Which ONE (1) of the following statements is correct regarding the effects of changing the letdown temperature to the CVCS mixed bed demineralizers?

A. Increasing temperature will cause the demineralizer to release boron. Decreasing temperature has no effect.

B. Increasing temperature has no effect, decreasing temperature will cause the demineralizer to release boron.

✓C. Increasing temperature will cause the demineralizer to release boron, decreasing temperature will cause boron to be removed.

D. Increasing temperature will cause the demineralizer to remove boron, decreasing temperature will cause boron to be released.

Question: 88

Given the following conditions:

- A LOCA has occurred.
- The H_2 Recombiner is in service.
- Containment Temperature = 140°F
- Containment Pressure = 2.1 psig
- TISH-3, Heater outlet gas temperature = 845°F
- TIC-4, Reaction Chamber gas temperature = 1325°F
- TISH-6, Gas Return Wall Temperature = 225°F.

Which ONE (1) of the following identifies the approximate H_2 Recombiner hydrogen influent concentration?

a. 3.4%

b. 4.0%

c. 4.4%

d. 5.2%

Answer:

b. 4.0%

QUESTION NUMBER: 88
TIER/GROUP: 2/3

K/A: 028K5.03
Knowledge of the operational implications of the following concepts as they apply to the HRPS: Sources of hydrogen within containment

K/A IMPORTANCE: RO 2.9

10CFR55 CONTENT: 55.41(b) RO 9

OBJECTIVE: CVHVAC-09
Explain the operation of the CV HVAC, PACV and Hydrogen Recombiner Systems.

REFERENCES: OP-922

SOURCE: New Significantly Modified Modified/Direct **X**

Bank Number CVHVAC-09 008

JUSTIFICATION:

a. Plausible if candidate correctly uses TIC4 and TISH3, but divides by containment temperature. Correct calculation is 4.0%.
b. **CORRECT** Calculation is (TIC4 - TISH3)/120. Result is 4.0%.
c. Plausible if candidate incorrectly uses TISH3 and TISH6 and divides by containment temperature. Correct calculation is 4.0%.
d. Plausible if candidate incorrectly uses TISH3 and TISH6 and divides by 120. Correct calculation is 4.0%.

DIFFICULTY:
Comprehensive/Analysis **X** Memory Rating 3

Calculation of hydrogen concentration based on given conditions.

REFERENCES SUPPLIED: OP-922, Attachment 9.2

POST-LOCA HYDROGEN RECOMBINATION RECORD

CONTINUOUS USE

This revision has been verified to be the latest revision available.

_____(Print) _____ _____
Name Signature Date

1. Date and Time: _____

2. Date and Time of LOCA: _____

3. Estimated hydrogen concentration from previous observation _____% H_2

4. Number of H_2 Recombiner Annunciator panel alarms illuminated _____

5. Complete the following:

CONTROL/INDICATOR	VALUE	NORMAL VALUE/ SET POINT	INIT
TISH-3	°F	1400°F	
TIC-4	°F	1350°F	
TISH-6	°F	300°F	
KS-1	minutes	120 minutes	
JS-1	AUTO / MANUAL (Circle one)	AUTO	
JS-2	AUTO / MANUAL (Circle one)	AUTO	
FI-1	inches H_2O	5 inches H_2O	
% CV H_2 Concentration	%H_2		
CV Temperature	°F		
CV Pressure	psig		
CV Spray Operating	YES / NO (Circle one)		

POST-LOCA HYDROGEN RECOMBINATION RECORD

INIT

6. Calculate hydrogen content of influent as follows:

$$\frac{TIC\text{-}4 - TISH\text{-}3}{120} = \%\ H_2$$

$$\frac{(\quad) - (\quad)}{120} = _____\ \%\ H_2$$ _____

7. Calculate the approximate Nitrogen dilution required using the following formulas:

1) $SCFM = 177.4\ \frac{P_{in} \times M_4}{T_t}^{1/2}$

- SCFM is the flow rate at the inlet nozzle
- P_{in} is absolute pressure at the flow meter throat in psia (determined from installed instrumentation)
- M_4 is read from FI-1 in inches
- T_t is flow meter throat temperature

2) $SCFM - \frac{SCFM \times 0.04}{\%\ H_2} = N_2$ flow rate @ STP

- % H_2 is the decimal equivalent of percent H_2
- N_2 flow rate @ STP is in SCFM
- N_2 dilution flow required = _____ SCFM @ STP _____

8. Adjust Nitrogen dilution flow as necessary. _____

	Initials	Name (Print)	Date
Performed By:	_____	_____	_____
	_____	_____	_____
	_____	_____	_____

Approved By: _____ _____
Superintendent Shift Operations Date

Question: 88

Given the following conditions:

- A LOCA has occurred.
- The H_2 Recombiner is in service.
- Containment Temperature = 140°F
- Containment Pressure = 2.1 psig
- TISH-3, Heater outlet gas temperature = 845°F
- TIC-4, Reaction Chamber gas temperature = 1325°F
- TISH-6, Gas Return Wall Temperature = 225°F.

Which ONE (1) of the following identifies the approximate H_2 Recombiner hydrogen influent concentration?

a. 2%

b. 3%

c. 4%

d. 5%

Answer:

c. 4%

include an A-sum for:

$$\frac{TIC4 - TISh3}{140}$$

$$\frac{TISh3 - TISh6}{120/140}$$

QUESTION NUMBER: 88
TIER/GROUP: 2/3

K/A: 028K5.03
Knowledge of the operational implications of the following concepts as they apply to the HRPS: Sources of hydrogen within containment

K/A IMPORTANCE: RO 2.9

10CFR55 CONTENT: 55.41(b) RO 9

OBJECTIVE: CVHVAC-09
Explain the operation of the CV HVAC, PACV and Hydrogen Recombiner Systems.

REFERENCES: OP-922

SOURCE: New Significantly Modified Modified/Direct **X**

Bank Number CVHVAC-09 008

JUSTIFICATION:

a. Plausible since this is a realistic value for hydrogen concentration following a LOCA. Calculation is 4%.
b. Plausible since this is a realistic value for hydrogen concentration following a LOCA. Calculation is 4%.
c. **CORRECT** Calculation is (TIC4 - TISH3)/120. Result is 4%.
d. Plausible since this is a realistic value for hydrogen concentration following a LOCA. Calculation is 4%.

DIFFICULTY:
Comprehensive/Analysis **X** Memory Rating 3

Calculation of hydrogen concentration based on given conditions.

REFERENCES SUPPLIED: OP-922, Attachment 9.2

ok

Question: 89

Given the following conditions:

- Letdown flow is 45 gpm.
- Charging is in AUTO.
- VCT Makeup Control is in AUTO.
- VCT Level Control is selected to NORMAL in Hagan Rack #19.

Assuming **NO** operator action, if LT-115, VCT Level, fails HIGH Charging Pump suction will ...

a. remain aligned to the VCT as VCT makeup operates continuously.

b. remain aligned to the VCT as VCT makeup cycles between 20.2" and 24.4".

c. shift to the RWST as the VCT empties.

d. be lost as the VCT empties.

Answer:

d. be lost as the VCT empties.

QUESTION NUMBER: 89
TIER/GROUP: 1/2

K/A: 022AK2.01
Knowledge of the interrelations between the Loss of Reactor Coolant Pump Makeup and the following: Valves

K/A IMPORTANCE: RO 2.4

10CFR55 CONTENT: 55.41(b) RO 6

OBJECTIVE: AOP-003-03
Explain the basis of selected steps, cautions, and notes in AOP-003.

REFERENCES: SD-021
AOP-003

SOURCE: New Significantly Modified **X** Modified/Direct

Bank Number AOP-003-03 011

JUSTIFICATION:

a. Plausible since a high failure of LCT-112 would result in this configuration if letdown was higher. LT-115 controls makeup which will not be available.

b. Plausible since a high failure of LCT-112 would result in this configuration with this letdown flow. LT-115 controls makeup which will not be available.

c. Plausible since the VCT will empty due to the diversion with no makeup. Requires both LT-112 and LT-115 low to cause shift.

d. **CORRECT** LT-115 failing high causes LCV-115A to divert to the HUT. Makeup is controlled by the failed transmitter, so it will not occur. As the VCT level lowers, charging pump suction will not swap to RWST since both VCT level transmitters must be low.

DIFFICULTY:
Comprehensive/Analysis **X** Memory Rating 3

Analysis of failure of VCT level transmitter on charging pump suction.

REFERENCES SUPPLIED: NONE

PSA RELATED

VCT LEVEL CONTROL

CVCS-FIGURE-17A (Rev . 0)

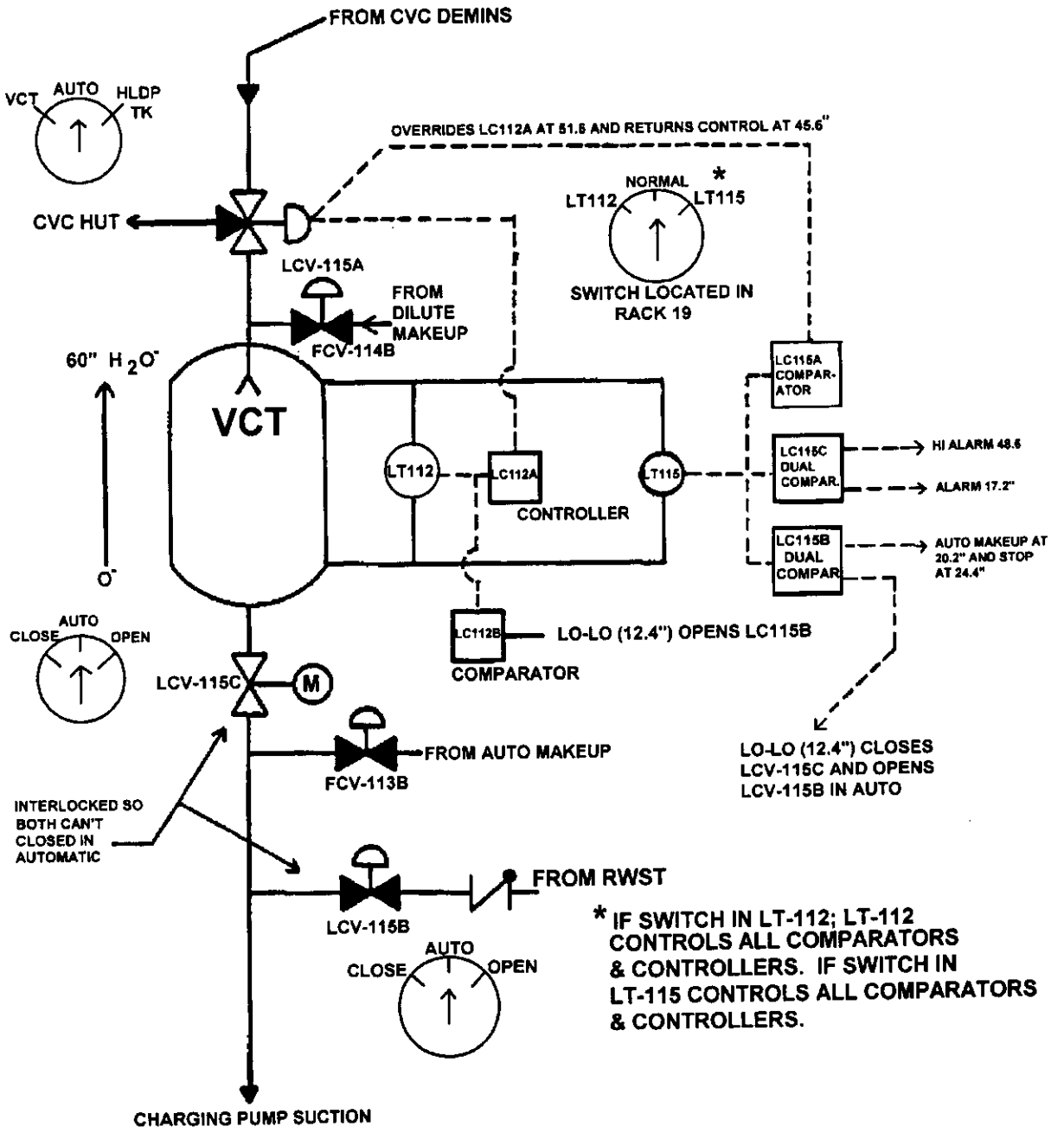

cvcsf17a

STEP	INSTRUCTIONS	RESPONSE NOT OBTAINED

****

CAUTION

With no operator action, LT-115 failed high will result in the loss of Charging Pump suction.

****

NOTE

The selection of LT-112 in the Hagan Rack will return indicated level to LI-115 on the RTGB.

3.	Stabilize The RCS Makeup System As Follows:	
	a. Place LCV-115A, VCT/HLDP TK DIV, Control Switch to VCT	
	b. Obtain Hagan Racks Key number 10	
	c. Place the selector switch in the bottom of Hagan Rack 19 to LT-112	
	d. Check selector switch in Hagan Rack 19 - SELECTED TO LT-112	d. **WHEN** switch is selected to LT-112, **THEN** Go To Step 3.e.
	e. Place the LCV-115A Control Switch to AUTO	
	f. Contact I&C to repair failed channel	
	g. Go To Step 10	
4.	Check LT-115 - FAILED LOW	Go To Step 6.

AOP-003-03 011

AOP-003, "Malfunction of Reactor Make-up Control", provides direction for instrument failures for various VCT level instruments. Which ONE (1) of the following is indicative of LT-112 failing high?

✓A. If no action is taken, then LI-115 will decrease but emergency makeup will not automatically actuate

B. LCV-115A to the VCT

C. No automatic make-up

D. If no action is taken, then LI-112 will increase causing LCV-115A to modulate to HUT

OK

Question: 90

Given the following conditions:

- The S/G FRV's are in manual.
- When the unit OCB's are shut, approximately 35 MWe are picked up.

Which ONE (1) of the following describes the initial S/G response and required operator action?

	SG NR LEVEL	OPERATOR ACTION
a.	Decrease	Decrease feed flow
b.	Decrease	Increase feed flow
c.	Increase	Decrease feed flow
d.	Increase	Increase feed flow

Answer:

d.	Increase	Increase feed flow

QUESTION NUMBER: 90
TIER/GROUP: 2/2

K/A: 035A1.01
Ability to predict and/or monitor changes in parameters (to prevent exceeding design limits) associated with operating the S/GS controls including: S/G wide and narrow range level during startup, shut-down, and normal operations

K/A IMPORTANCE: RO 3.6

10CFR55 CONTENT: 55.41(b) RO 5

OBJECTIVE: SG-10
Explain the operation of the Steam Generator System.

REFERENCES: GP-005

SOURCE: New Significantly Modified Modified/Direct **X**

Bank Number SG-10 003

JUSTIFICATION:

a. Plausible since SG level will change as a result of changing steam demand. SG level initially swells when steam demand increased.

b. Plausible since SG level will change as a result of changing steam demand. SG level initially swells when steam demand increased.

c. plausible since SG level will change as a result of changing steam demand. Operator must increase feed flow to match increased steam demand.

d. **CORRECT** Raising steam demand momentarily causes the SGs to swell. Additional FW is required since steaming rate has risen.

DIFFICULTY:
Comprehensive/Analysis **X** Memory Rating 3

Comprehension of SG shrink and swell and required operator actions in response.

REFERENCES SUPPLIED: NONE

5.8 During start-up and loading of the Turbine, S/G water level is very unstable and has a tendency to swell. S/G levels should be maintained from 40% to 50% on narrow range level indication for better control. The wide range and narrow range tend to disagree slightly when there is a transient level condition. Wide range level indication should be used to observe which direction the level is moving. If the narrow range level approaches the High or LO-LO Level trip point, Turbine loading should be stopped until S/G level recovers. Wide swings in Feedwater Regulating Valve positions, in the open or closed direction, should be avoided, as this can cause water level to shrink or swell out of control. Sustained Turbine operation at less than 5% of rated load should be avoided.

5.9 The Feedwater Regulating Valves FCV-478, FCV-488, FCV-498, and Rod Control should be placed in MANUAL when switching Turbine first stage pressure channels. The Feedwater Regulating Valves FCV-478, FCV-488, FCV-498, should be placed in MANUAL when switching steam flow channels, or feedwater flow channels.

5.10 For Turbine startups and scheduled load changes the heatup and loading rates specified in Curves 7.8, 7.9, and 7.10 should be adhered to.

5.11 Power Ramp Rate Limits are restricted after core fuel movement to 3.5%/hr from 50% to 100% power. During subsequent power increases, this ramp limit may apply depending on the maximum power level achieved and length of operation at that power level. (ESR 98-00395)

5.12 The RCS Design Basis Document states that the PZR Spray Valves are designed to prevent PZR pressure from reaching the lift setpoint of the PZR PORVs following a step reduction of 10% of full power under automatic Reactor control during normal plant operations. Normal loading and unloading is 5% of full power per minute. Operability Determination 95-015 Rev 2 identifies that when one PZR Spray Valve is out of service, step changes should be limited to 5% of full power to reduce the potential for challenging the PZR PORVs. (CAPS Project CR 95-02365)

5.13 Exhaust hood temperature should not be allowed to exceed 175 °F with exhaust hood spray out of service. If the temperature cannot be reduced to less than 175°F, the unit should be shutdown and the trouble corrected. The maximum exhaust hood temperature permitted for short periods of time is 250 °F. A Generator Lockout will occur if the exhaust hood temperature is 225 °F for greater for 5 minutes.

OK

Question: 91

A Fire Detection System actuation has caused a large amount of fire water to be sprayed into Containment.

Which ONE (1) of the following is the major concern with the fire water inside Containment?

a. Flooding of safeguards equipment

b. Degradation of the concrete structures

c. Formation of hydrogen caused by the water interaction with Containment components

d. Dilution of Containment sump water in the event of a LOCA

Answer:

d. Dilution of Containment sump water in the event of a LOCA

QUESTION NUMBER: 91
TIER/GROUP: 1/1

K/A: 067AK3.04
Knowledge of the reasons for the following responses as they apply to the Plant Fire on Site: Actions contained in EOP for plant fire on site

K/A IMPORTANCE: RO 3.3

10CFR55 CONTENT: 55.41(b) RO 10

OBJECTIVE: AOP-032-03
Demonstrate an understanding of selected steps, cautions, and notes in AOP-032 by explaining the basis of each.

REFERENCES: AOP-032

SOURCE: New Significantly Modified **X** Modified/Direct

Bank Number AOP-032-03 004

JUSTIFICATION:

a. Plausible since flooding is the major concern if the break is in the Aux Building. Equipment in containment is located above flood level.

b. Plausible since fire water may result in erosion of concrete structures in containment. Concern is dilution of sump water.

c. Plausible since source of hydrogen is water interaction with containment structure. Major concern is dilution during LOCA.

d. **CORRECT** Analysis takes into account RCS water and RWST water being in sump. Fire water is unborated and will cause dilution if LOCA occurred.

DIFFICULTY:
Comprehensive/Analysis Memory **X** Rating 2

Knowledge of basis for isolating fire water to containment if line ruptures.

REFERENCES SUPPLIED: NONE

BASIS DOCUMENT, RESPONSE TO FLOODING FROM THE FIRE PROTECTION SYSTEM

DISCUSSION:

The purpose of this procedure is to provide instructions to be followed in the event of flooding caused by a break in the Fire Protection System. This procedure is designed to isolate the break and deal with the resulting water prior to operability concerns arising. This procedure is not intended for small system leaks that do not pose a threat to safety related equipment or that can be handled by the floor drain systems.

A break may range is size from several gpm to the design flow of the system (5,000 gpm at 125 psig), to maximum runout flow (≈7,500 gpm at 80 psig). The larger size breaks can do significant damage and can quickly overwhelm the capacity of installed sump pumps and floor drains.

There are many symptoms, but the first, and most likely, will be when the low header pressure auto-starts one or both of the fire pumps with no corresponding alarm from a system actuation.

Since a leak in one area has different required actions than a leak in another, the most important procedural action is to determine where the break is. The location will normally be discovered by verbal reports of geysers/flooding or area sump high level alarms. If these do not exist, then a walkdown inspection must be performed.

This procedure is divided into three main parts; break in the Auxiliary Building, break in Containment and break at the Intake structure.

The most serious location for a break is in the Aux Building. This is due to the fact that when water level reaches a certain height, both trains of Safeguards Equipment can be rendered inoperable. This event is further compounded by the fact that all spilled water may become contaminated and must be treated so until proven otherwise. (Note that other major system breaks in the Aux Building are addressed by their appropriate procedures - AOP-008 for LWS, AOP-014 for CCW, and AOP-022 for SWS).

The break in Containment is a situation where local inspection could be delayed. Safeguards equipment will not be affected, but the water needs to be removed from the Containment Sump since it represents an unanalyzed condition that would dilute LOCA water before a sump recirc condition.

The break at the Intake Structure is easily isolable and results in restoring the Unit 2 FPS from another source using OP-801, Fire Water System. (Note that this AOP does not refer to AOP-22 for Service Water Pit Breaks to avoid needless isolation of Service Water.)

AOP-032-03 004

In AOP-032, Response To Flooding From The Fire Protection System, the concern about a break in containment is correctly stated by which ONE (1) of the following?

A. the adverse affects on safeguards equipment.

B. the thermal stress effects of water coming in contact with the reactor vessel.

C. the water having an adverse impact on the instrumentation associated with systems in containment.

✓D. it represents an unanalyzed condition that would dilute LOCA water.

ok

Question: 92

Given the following plant conditions:

- A Liquid radwaste release is in progress.
- **NO** high radiation alarm is present.
- RCV-018, Liquid Radwaste Discharge valve, closes.

Which ONE (1) of the following could have caused the closure of RCV-018?

a. Loss of control air to valve

b. Loss of 118VAC supply to valve

c. Actuation of a Phase "A" isolation

d. High flow on YI-1076, Liquid Waste Flow Integrator

Answer:

a. Loss of control air to valve

QUESTION NUMBER: 92
TIER/GROUP: 2/1

K/A: 068A4.04
Ability to manually operate and/or monitor in the control room: Automatic isolation

K/A IMPORTANCE: RO 3.8

10CFR55 CONTENT: 55.41(b) RO 13

OBJECTIVE: AIR-14
Explain the effect on the Instrument and Station Air System due to selected failures.

REFERENCES: AOP-017

SOURCE: New Significantly Modified Modified/Direct **X**

Bank Number AIR-14 006

JUSTIFICATION:

a. **CORRECT** Valve fails closed on a loss of air.
b. Plausible since valve fails closed on loss of power. Power to solenoid is DC power.
c. Plausible since Phase A causes many valves to close. Valve is not a containment isolation valve.
d. Plausible since flow indication is used during liquid release. Only used for indication, has no automatic function.

DIFFICULTY:
Comprehensive/Analysis Memory **X** Rating 2

Knowledge of failure mode of air-operated valve.

REFERENCES SUPPLIED: NONE

ATTACHMENT 1

MAJOR COMPONENTS AFFECTED BY LOSS OF IA

(Page 5 of 5)

15. Waste Disposal System Components FAIL POSITION

a. RCV-014, WASTE GAS DECAY TANK RELEASE ISOLATION - CLOSED

b. RCV-018, LIQUID WASTE RELEASE ISOLATION - CLOSED

c. WD-1721 & 1722, RCDT PUMP DISCHARGE - CLOSED

d. WD-1723 & 1728, CV SUMP DISCHARGE - CLOSED

e. WD-1786 & 1787, RCDT VENT - CLOSED

f. WD-1789 & 1794, RCDT TO GAS ANALYZER - CLOSED

g. WGDT COVER GAS VALVES - CLOSED

h. WGDT PRESSURE TRANSMITTERS - FAILS LOW

i. WGDT SUPPLY VALVES - CLOSED

j. WGDT TO GAS ANALYZER VALVES - CLOSED

- END -

Question: 93

Given the following conditions:

- The plant is in MODE 5.
- Service Water flow is lost to the CCW heat exchangers.
- RCS temperature is increasing.
- Reports from the field indicate **NO** leaks in the Turbine Building, Auxiliary Building, or Intake.

Which ONE (1) of the following procedures would be used to mitigate this plant condition?

a. AOP-018, Reactor Coolant Pump Abnormal Conditions

b. AOP-020, Loss of Residual Heat Removal (Shutdown Cooling)

c. AOP-022, Loss of Service Water

d. AOP-033, Shutdown LOCA

Answer:

b. AOP-020, Loss of Residual Heat Removal (Shutdown Cooling)

QUESTION NUMBER: 93
TIER/GROUP: 3

K/A: 2.4.24
Knowledge of loss of cooling water procedures.

K/A IMPORTANCE: RO 3.3

10CFR55 CONTENT: 55.41(b) RO 10

OBJECTIVE: AOP-020-02
Recognize the selected entry level conditions of AOP-020.

REFERENCES: AOP-018
AOP-020
AOP-022
AOP-033

SOURCE: New Significantly Modified Modified/Direct **X**

Bank Number AOP-020-02 002

JUSTIFICATION:

a. Plausible since CCW supplies cooling flow to RCPs. Procedure addresses seal injection failure, seal failure, and RCP vibration.

b. **CORRECT** Entry conditions are abnormal temperature control.

c. Plausible since stem states SW to CCW is lost. Procedure addresses ruptures of SW piping.

d. Plausible since entry can be directed from AOP-020. Procedure addresses inventory losses greater than makeup capability above cold shutdown.

DIFFICULTY:
Comprehensive/Analysis Memory **X** Rating 3

Knowledge of entry conditions for AOPs.

REFERENCES SUPPLIED: NONE

PSA RELATED

Purpose and Entry Conditions

(Page 1 of 1)

1. PURPOSE

This procedure provides instructions to protect the Reactor Coolant Pumps after a component failure or support system malfunction.

2. ENTRY CONDITIONS

This procedure is entered for any of the following events:

- Loss of Seal Injection flow to any RCP
- Indication of any RCP Seal malfunction
  - RCP #1 Seal leakoff flow greater than 5 gpm
  - RCP #1 Seal leakoff flow less than 1 gpm
  - RCP #2 Seal leakoff flow greater than 0.5 gpm
  - Indication of RCP #3 Seal malfunction (repeat low standpipe level at normal pressure)
- High Vibration on an RCP during steady state conditions

- END -

STEP	INSTRUCTIONS	RESPONSE NOT OBTAINED

1. PURPOSE

This procedure provides the instructions necessary to mitigate the loss of RHR in all conditions for which RHR can be aligned to provide shutdown cooling. This includes loss of RHR cooling for reasons such as RCS leakage, loss of power, loss of Service Water or Component Cooling Water, RHR pump cavitation, and inadequate RHR flow or abnormal reductions in RHR cooling.

This procedure is applicable in Modes 4, 5, and 6.

2. ENTRY CONDITIONS

Direct entry from any condition resulting in a loss of RHR pump(s), RHR pump cavitation, abnormal RHR flow or temperature control, or excessive loss of RCS inventory while RHR is aligned for shutdown cooling.

As directed by the following other procedures:

- AOP-005, Radiation Monitoring System, when a low level in the SFP exists due to an RCS leak with the Fuel Transfer Tube Isolation Valve open.
- AOP-014, Component Cooling Water System Malfunction, resulting in stopping of the RHR Pumps while in CSD.
- AOP-016, Excessive Primary Plant Leakage, if less than 200°F and leakage exceeds Charging Capacity.
- AOP-017, Loss Of Instrument Air, if the loss of Instrument Air has affected core cooling while on RHR.

- END -

Purpose and Entry Conditions

(Page 1 of 1)

1. PURPOSE

This procedure provides instructions in the event of a break of either the North or South Service Water Headers upstream OR downstream of check valves SW-541 or SW-545 or flooding in the Intake Area Service Water Pits.

2. ENTRY CONDITIONS

This procedure is entered whenever there is an indication that a break of a Service Water Header has occured.

- END -

Purpose and Entry Conditions

(Page 1 of 1)

1. PURPOSE

This procedure provides the instructions necessary to mitigate a LOCA during a cooldown, after the SI Accumulators are isolated and before the RCS reaches 200°F. This procedure incorporates the guidance of ARG-2.

2. ENTRY CONDITIONS

Entry into this procedure is made for RCS leak rates greater than makeup capability during the interval following SI Accumulator isolation, but prior to reaching 200°F via three mechanisms:

- Direct entry after diagnosing above.
- On direction of AOP-016, Excessive Primary Plant Leakage.
- On direction of AOP-020, Loss Of Residual Heat Removal (Shutdown Cooling).

- END -

Question: 93

Given the following conditions:

- The plant is in MODE 5.
- Service Water was lost to the CCW heat exchangers.
- ~~This, in turn, caused a loss of cooling to the inservice RHR heat exchanger~~.

This would be an entry condition for Which ONE (1) of the following procedures?

a. AOP-018, Reactor Coolant Pump Abnormal Conditions

b. AOP-020, Loss of Residual Heat Removal (Shutdown Cooling)

c. AOP-022, Loss of Service Water

d. AOP-033, Shutdown LOCA

Answer:

b. AOP-020, Loss of Residual Heat Removal (Shutdown Cooling)

QUESTION NUMBER: 93
TIER/GROUP: 3

K/A: 2.4.24
Knowledge of loss of cooling water procedures.

K/A IMPORTANCE: RO 3.3

10CFR55 CONTENT: 55.41(b) RO 10

OBJECTIVE: AOP-020-02
Recognize the selected entry level conditions of AOP-020.

REFERENCES: AOP-018
AOP-020
AOP-022
AOP-033

SOURCE: New Significantly Modified Modified/Direct **X**

Bank Number AOP-020-02 002

JUSTIFICATION:

a. Plausible since CCW supplies cooling flow to RCPs. Procedure addresses seal injection failure, seal failure, and RCP vibration.
b. **CORRECT** Entry conditions are abnormal temperature control.
c. Plausible since stem states SW to CCW is lost. Procedure addresses ruptures of SW piping.
d. Plausible since entry can be directed from AOP-020. Procedure addresses inventory losses greater than makeup capability above cold shutdown.

DIFFICULTY:
Comprehensive/Analysis Memory **X** Rating 3

Knowledge of entry conditions for AOPs.

REFERENCES SUPPLIED: NONE

PSA RELATED

Question: 93

Given the following conditions: • RCS temperature is increasing

- The plant is in MODE 5.
- Service Water flow is lost to the CCW heat exchangers.
- Reports from the field indicate **NO** leaks in the Turbine or Auxiliary Buildings, nor the Intake

Which ONE (1) of the following procedures would be used to mitigate this plant condition?

a. AOP-018, Reactor Coolant Pump Abnormal Conditions

b. AOP-020, Loss of Residual Heat Removal (Shutdown Cooling)

c. AOP-022, Loss of Service Water

d. AOP-033, Shutdown LOCA

Answer:

b. AOP-020, Loss of Residual Heat Removal (Shutdown Cooling)

Question: 94

Given the following conditions:

- The plant is operating at 100% power.
- HIC-110, Boric Acid Tk 'A' Recirc, has failed closed.
- Maintenance reports that it will take them several days to get replacement parts to make repairs to the controller.

Which ONE (1) of the following statements is accurate if a blended flow to the VCT is required?

a. Continued use of Boric Acid Tank 'A' is acceptable since the recirculation flow only serves as a backup to heat tracing.

b. Continued use of Boric Acid Tank 'A' is **NOT** acceptable since recirculation flow is required for Boric Acid Tank Pump "A" operability.

c. Boric Acid Tank 'B' should be used since representative boric acid concentration samples from Boric Acid Tank 'A' **CANNOT** be obtained.

d. Boric Acid Tank 'B' must be used since the boric acid line to the blender is located downstream of the recirculation valve.

Answer:

c. Boric Acid Tank 'B' should be used since representative boric acid concentration samples from Boric Acid Tank 'A' **CANNOT** be obtained.

QUESTION NUMBER: 94
TIER/GROUP: 2/1

K/A: 004K6.10
Knowledge of the effect of a loss or malfunction on the following CVCS component: Boric acid storage tank/boron injection tank recirculation flow path

K/A IMPORTANCE: RO 2.7

10CFR55 CONTENT: 55.41(b) RO 6

OBJECTIVE: CVCS-14
Explain the effect on the CVCS due to selected failures.

REFERENCES: OP-301

SOURCE: New **X** Significantly Modified Modified/Direct

Bank Number NEW

JUSTIFICATION:

a. Plausible since high concentration boric acid piping is heat traced. Tank itself does not contain heat tracing and concern is solution temperature and chemistry.

b. Plausible since recirc is used prior to sampling to allow a representative sample. Recirc flowpath is not part of pump operability requirement.

c. **CORRECT** The tank is required to be placed on recirc at least once per day to help maintain solution temperature and chemistry and a representative sample cannot be obtained to verify this.

d. Plausible since opposite tank is to be used. Blender connection is at pump discharge, not on recirc line.

DIFFICULTY:
Comprehensive/Analysis **X** Memory Rating 3

Analysis of system failure and determination of corrective actions based on failure.

REFERENCES SUPPLIED: NONE

5.61 A Charging Pump should be operated for a minimum of 5 minutes following any start. This will ensure fully developed flow through the suction stabilizer and suction line, there by reducing possible gas buildup. Pump run of less than 5 minutes should be followed by a run on recirculation prior to the pump being placed inservice. (CR 95-02836)

5.62 The Boric Acid Storage Tanks should be recirculated at least once per day **AND** anytime additions are made to the tank(s). This will help maintain equal Boric Acid solution temperature and chemistry. (ACR 94-00009)

5.63 During Emergency condition performance of the Charging Pump Break-In After Sitting Idle section is not required to place the Charging Pump in operation.

5.64 The Pressurizer shall be OPERABLE with:

- Pressurizer Water level ≤63.3% in MODE 1;
- Pressurizer Water level ≤92% in MODE 2 and 3; and
- Pressurizer Heaters OPERABLE with a capacity of ≥ 125KW and cable of being powered from an emergency power supply.

8.2.6 Recirculation of Boric Acid Tanks "A" and "B"

1. **IF** BAST "A" is to be recirculated, **THEN** perform the following:

   a. Start BORIC ACID PUMP "A".

   b. Throttle HIC-110, BORIC ACID TK "A" RECIRC, to 15% open.

2. **IF** BAST "B" is to be recirculated, **THEN** perform the following:

   a. Start BORIC ACID PUMP "B".

   b. Throttle HIC-105, BORIC ACID TK "B" RECIRC, to 15% open.

NOTE: BASTs "A" and "B" should be recirculated for a minimum of 90 minutes to prevent stratification and temperature gradient within the tank. EC samples can be taken after 60 minutes of recirculation, based on EC calculation of recirc time for a representative sample.

3. **IF** the BASTs are being recirculated for EC to take samples, **THEN** notify EC that the BASTs are recirculating.

4. **WHEN** the sample has been taken, **OR, IF** samples are **NOT** being taken **AND** the BASTs have recirculated for a minimum of 90 minutes, **THEN** perform the following:

   IF BAST "A" is recirculating, **THEN** perform the following:

   1. Stop BORIC ACID PUMP "A".

   2. Close HIC-110, BORIC ACID TK "A" RECIRC.

   IF BAST "B" is recirculating, **THEN** perform the following:

   1. Stop BORIC ACID PUMP "B".

   2. Close HIC-105, BORIC ACID TK "B" RECIRC.

5. Place the control switch for the Boric Acid Pump aligned to the blender in AUTO.

OK

Question: 95

Given the following conditions:

- The plant was initially at 50% power.
- A grid disturbance resulted in a load rejection of 120 MWe.
- The Steam Dumps have **NOT** actuated.
- The Operator verifies that the STEAM DUMP CONTROL switch is in the ON position.
- The Operator places the STEAM DUMP MODE switch to the STEAM PRESS.
- The Operator FAILS to place the STEAM HEADER PRESS controller PC-464B in MAN.

Which ONE (1) of the following describes the effect on plant operations?

a. The Steam Dumps will **NOT** open for any plant condition

b. The Steam Dumps will open to match Tave with Tref

c. The Steam Dumps will open to control Steam Pressure at 1020 psig

d. The Steam Dumps will open to control Steam Pressure at 1005 psig

Answer:

c. The Steam Dumps will open to control Steam Pressure at 1020 psig

QUESTION NUMBER: 95
TIER/GROUP: 2/3

K/A: 041K6.03
Knowledge of the effect of a loss or malfunction on the following will have on the SDS: Controller and positioners, including ICS, S/G, CRDS

K/A IMPORTANCE: RO 2.7

10CFR55 CONTENT: 55.41(b) RO 4

OBJECTIVE: SD-14
Explain the effect on the Steam Dump System due to selected failures.

REFERENCES: AOP-015
SD-031

SOURCE: New Significantly Modified Modified/Direct **X**

Bank Number AOP-015-03 002

JUSTIFICATION:

a. Plausible since interlock failures will cause dumps to not actuate. Dumps will be controlled in steam pressure auto mode.

b. Plausible since this is the normal mode of Tave control following a turbine trip. Dumps will be controlled in steam pressure auto mode.

c. **CORRECT** Normal setpoint at power for the steam pressure mode is 1020 psig. Leaving the controller in auto will cause the dumps to attempt to maintain 1020 psig.

d. Plausible since steam dumps will open to control pressure. Setpoint given is for post-shutdown conditions.

DIFFICULTY:
Comprehensive/Analysis **X** Memory Rating 4

Comprehension of steam dump operations, including interlocks and relationship between steam dumps and control signals.

REFERENCES SUPPLIED: NONE

STEP	INSTRUCTIONS	RESPONSE NOT OBTAINED

****

CAUTION

Misoperation of the Steam Dumps while in manual control can lead to excessive S/G swell or overcooling of the RCS.

****

* 4.	Check Steam Dump To Condenser - ACTUATED	Perform the following: a. Verify the STEAM DUMP CONTROL Switch is placed to ON. b. Place STEAM HEADER PRESS Controller PC-464B in MAN. c. Manually adjust controller output to minimum. d. Place STEAM DUMP MODE Switch to STEAM PRESS. e. Manually adjust controller output to operate Steam Dump Valves **AND** reduce T_{avg} to within 5°F of T_{ref}. f. **WHEN** T_{avg} decreases to within 5°F of T_{ref}, **THEN** perform the following concurrently: • Verify Control Rod insertion **OR** borate to adjust T_{avg} to within +0.5 to -2.5°F of T_{ref}. **AND** • Slowly adjust PC-464B output to close the Steam Dump Valves.
5.	Check PZR PORVs - CLOSED	**IF** PZR pressure is less than 2335 psig, **THEN** close PZR PORVs. **IF** any PZR PORV can **NOT** be closed, **THEN** close its PORV BLOCK.

d. Settings

1. Proportional gain in percent of total dump capacity per °F

loss of load controller (TM-408J)	3.7%/°F(1)*
plant trip controller (TM-408L)	1.367%/°F**

The controllers should be adjusted such that the dump capacity is linear with the output of TM-408J, TM-408L, or PC-464A (Below)***.

2. Lead time constant (TM-408D, TM-408K) — 25 sec

3. Lag time constants (TM-408D, TM-408K) — 5 sec (1)

4. Deadband (TM-408J) — 5°F (1)

5. Deadband steam dump controller for turbine trip (TM-408L) — 0°F

6. Steam header pressure controller (PC-464A, PC-464B)

set pressure	1020 psig (1)
proportional band (based on total condenser plus atmospheric dump and relief capacity)	200 psig (2)
Reset time constant	180 sec (2)

7. Steam generator relief valve controllers

proportional band (valve full stroke)	50 psig (1)
reset time constant	180 sec (2)
set pressure	1035 psig

* 32°F prop. band for all valves
** 30°F prop. band for first two banks
*** Bank 3 atmospheric dump valves have been removed
Setpoints noted as (1) and (2) are defined below:

1. These setpoints may be adjusted during startup and subsequent operation to optimize control response.
2. Preliminary values to be used for instrument checkout.

INFORMATION USE ONLY

STEAM DUMP MODULATION LOGIC

SD-FIGURE-4 (Rev . 3)

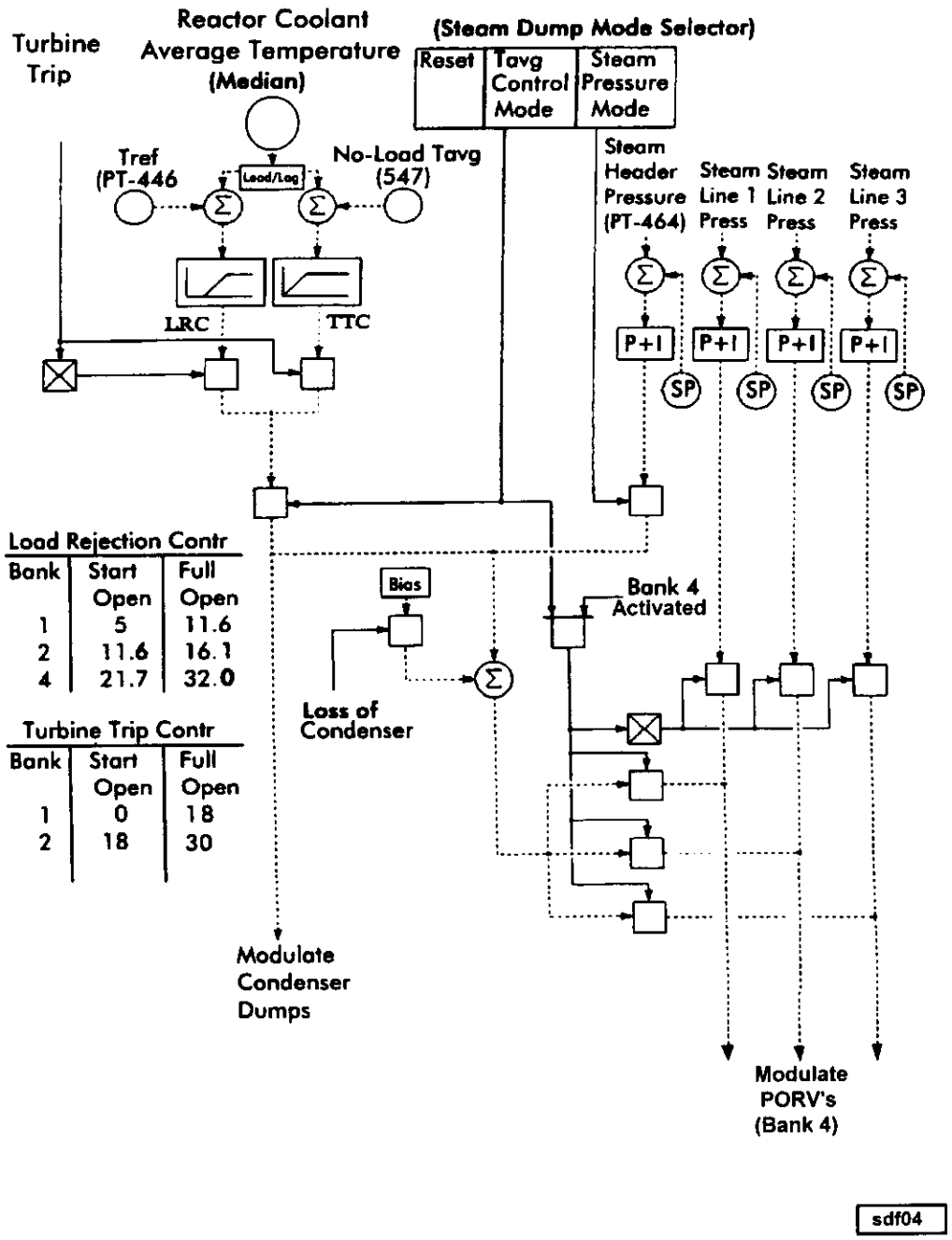

Load Rejection Contr

Bank	Start Open	Full Open
1	5	11.6
2	11.6	16.1
4	21.7	32.0

Turbine Trip Contr

Bank	Start Open	Full Open
1	0	18
2	18	30

INFORMATION USE ONLY

8.4.28 (Continued) INIT

2. Position the Moisture Separator PURGE VALVES switch to OPEN **AND** hold until the following valves open, as indicated on the RTGB:

   - FCV-1334A, MSR 1A TUBESIDE VENT TO CONDENSER ____
   - FCV-1334B, MSR 1B TUBESIDE VENT TO CONDENSER ____
   - FCV-1334C, MSR 2A TUBESIDE VENT TO CONDENSER ____
   - FCV-1334D, MSR 2B TUBESIDE VENT TO CONDENSER ____
   - V1-6-1A, MSR STEAM PURGE VALVE ____
   - V1-6-2A, MSR STEAM PURGE VALVE ____
   - V1-6-1B, MSR STEAM PURGE VALVE ____
   - V1-6-2B, MSR STEAM PURGE VALVE ____

8.4.29 **WHEN** the Steam Dump Valves indicate CLOSED, **THEN** transfer Steam Dump to T_{avg} Control as follows:

1. Depress MAN on PC-464B. ____
2. Position the STEAM DUMP MODE Selector to RESET, **AND THEN** to T-AVG. ____
3. Verify the Steam Dump Valves remain CLOSED. ____
4. Depress AUTO on PC-464B. ____
5. Adjust PC-464B, STEAM HEADER PRESS controller to a potentiometer setting of 7.28 (1020 psig). ____

Question: 96

Given the following conditions:

- A reactor trip signal has occurred, but the reactor failed to trip.
- A transition has been made to FRP-S.1, "Response to Nuclear Power Generation/ATWS."
- When the operator attempts to Emergency Borate, neither Boric Acid Pump will start.

Which ONE (1) of the following Charging Pump suctions should be established to provide boric acid to the RCS?

a. From the RWST by opening LCV-115B, EMERG MU TO CHG SUCT, or locally opening CVC-358, RWST TO CHARGING PUMP SUCTION

b. Directly off the BAT by opening MOV-350, BA TO CHARGING PMP SUCT

c. Directly off the BAT by locally opening CVC-356, BA BLENDER BYPASS TO CHARGING PUMP HDR VENT

d. Through the Blender by opening FCV-113A, BORIC ACID FLOW, and FCV-113B, BLENDED MU TO CHG SUCT

not plausible

Answer:

a. From the RWST by opening LCV-115B, EMERG MU TO CHG SUCT, or locally opening CVC-358, RWST TO CHARGING PUMP SUCTION

QUESTION NUMBER: 96
TIER/GROUP: 1/2

K/A: 029EK3.11
Knowledge of the reasons for the following responses as the apply to the ATWS: Initiating emergency boration

K/A IMPORTANCE: RO 4.2

10CFR55 CONTENT: 55.41(b) RO 6

OBJECTIVE: FRP-S.1-04
Determine the different flowpaths generated by FRP-S.1, including transitions to the Severe Accident Management Program.

REFERENCES: FRP-S.1
SD-021

SOURCE: New Significantly Modified **X** Modified/Direct

Bank Number FRP-S.1-04 003

JUSTIFICATION:

a. **CORRECT** Charging pump suction is aligned to the RWST when boric acid pumps are unable to transfer acid.
b. Plausible since this aligns charging pump suction to boric acid source. Boric acid pumps are required for this flowpath to be successful.
c. Plausible since this aligns charging pump suction to boric acid source. Boric acid pumps are required for this flowpath to be successful.
d. Plausible since this aligns charging pump suction to boric acid source. Boric acid pumps are required for this flowpath to be successful.

DIFFICULTY:
Comprehensive/Analysis Memory **X** Rating 3

Procedural requirement for establishing boration during ERGs.

REFERENCES SUPPLIED: NONE

STEP	INSTRUCTIONS	RESPONSE NOT OBTAINED
4.	Initiate Emergency Boration Of RCS As Follows:	
	a. Verify Charging flowpath established as follows:	
	1) CVC-310B, LOOP 2 COLD LEG CHG - OPEN	1) Open CVC-310A, LOOP 1 HOT LEG CHG.
	2) HIC-121, CHARGING FLOW Controller - DEMAND SIGNAL AT 0%	
	b. Verify Two Charging Pumps - RUNNING AT FULL SPEED	
	c. Verify Boric Acid Pump aligned for blend - RUNNING	c. Perform the following: 1) Open one of the following valves: • LCV-115B, EMERG MU TO CHG SUCT OR • CVC-358, RWST TO CHARGING PUMP SUCTION (locally) 2) Close LCV-115C, VCT OUTLET. 3) Go To Step 4.f.

(CONTINUED NEXT PAGE)

STEP	INSTRUCTIONS	RESPONSE NOT OBTAINED
4.	(CONTINUED)	
	d. Verify MOV-350, BA TO CHARGING PMP SUCT - OPEN	d. Perform the following: 1) Open one of the following valves: • LCV-115B, EMERG MU TO CHG SUCT OR • CVC-358, RWST TO CHARGING PUMP SUCTION (locally) 2) Close LCV-115C, VCT OUTLET. 3) Go To Step 4.f.
	e. Check flow on FI-110, BORIC ACID BYPASS FLOW - FLOW INDICATED	e. Perform the following: 1) Open one of the following valves: • LCV-115B, EMERG MU TO CHG SUCT OR • CVC-358, RWST TO CHARGING PUMP SUCTION (locally) 2) Close LCV-115C, VCT OUTLET.
	f. Verify Charging Flow to RCS on FI-122A	
5.	Verify CONTAINMENT VENTILATION ISOLATION - INITIATED	
* 6.	Check SI - INITIATED	<u>IF</u> An SI Signal occurs, <u>THEN</u> verify auto start of all SI equipment using Supplement L, while continuing with this procedure. Go To Step 8

BORATION FLOWPATH

CVCS-FIGURE-9 (Rev . 1)

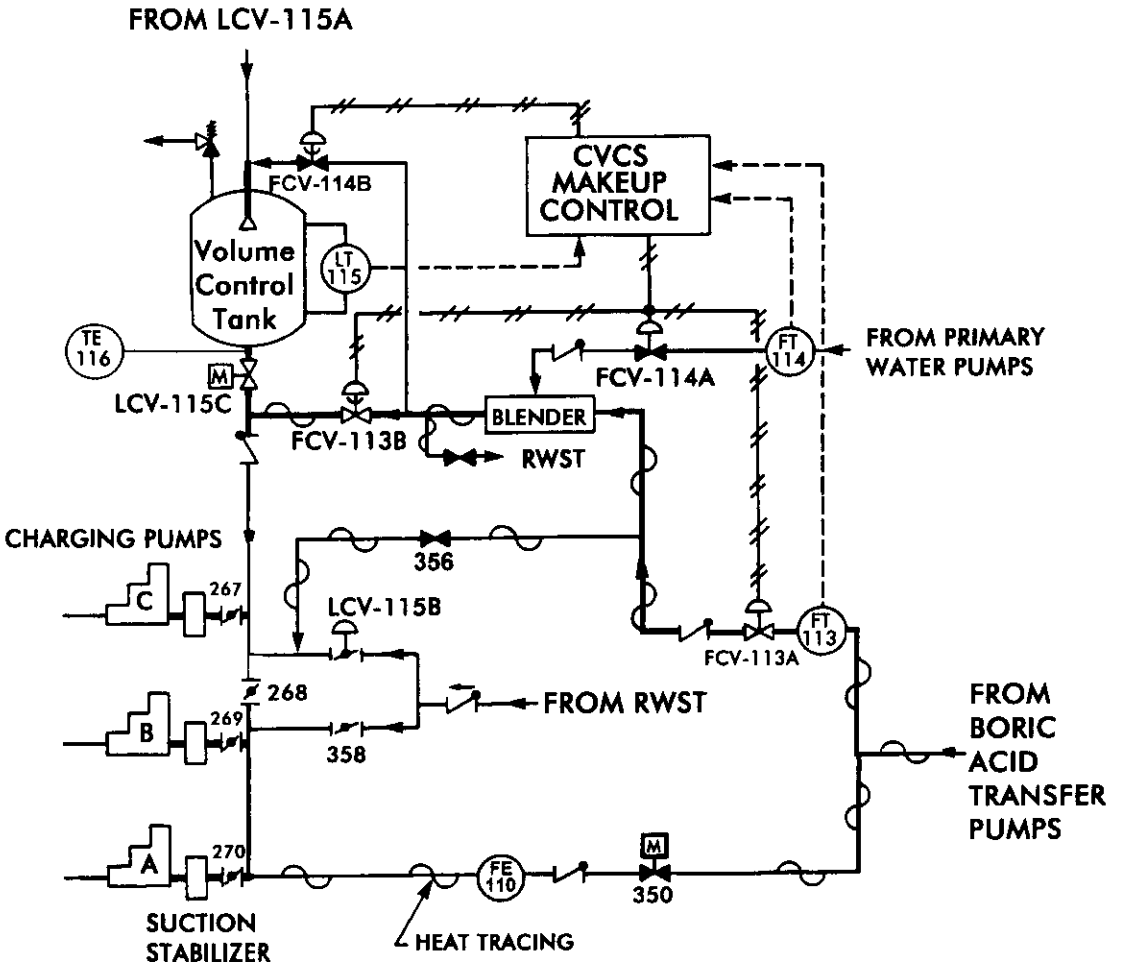

CVCSF09

INFORMATION USE ONLY

FRP-S.1-04 003

Which ONE (1) of the following describes why pressurizer pressure is checked less than 2335 psig when emergency boration is in progress in accordance with FRP-S.1, "Response to Nuclear Power Generation/ATWS"?

✓A. Alert operator to condition that may reduce charging flow and impede emergency boration.

B. Alert operator to condition that will cause a loss of RCS inventory if the pressurizer safety valves open.

C. To verify that the emergency boration is effective and maintaining RCS pressure below the safety valve setpoint.

D. To verify that the only heat being generated is decay heat and pump heat.

ok

Question: 97

Given the following conditions:

- A loss of offsite power has occurred.
- The unit tripped from 70% power.
- Demand signal on the Steam Dump pressure controller is at 50%.
- The operator transfers the Steam Dump Mode switch from Tavg Mode to Steam Press Mode.

Which ONE (1) of the following describes the response of the Steam Dump System?

a. **ONLY** Bank 1 Steam Dump Valves open

b. **ONLY** Bank 1 AND Bank 2 Steam Dump Valves open

c. **ONLY** S/G PORVs are opened by the Steam Dump System

d. **ONLY** the S/G PORVs open, due to pressure rising to 1035 psig

Answer:

d. **ONLY** the S/G PORVs open, due to pressure rising to 1035 psig

QUESTION NUMBER: 97
TIER/GROUP: 2/2

K/A: 035A2.02
Ability to (a) predict the impacts of the following malfunctions or operations on the SG; and (b) based on those predictions, use procedures to correct, control, or mitigate the consequences of those malfunctions or operations: Reactor trip/turbine trip

K/A IMPORTANCE: RO 4.2

10CFR55 CONTENT: 55.41(b) RO 4

OBJECTIVE: SD-09
Explain the normal operation of the Steam Dump control systems. Include function, instrumentation, interlocks, annunciators, and setpoints.

REFERENCES: SD-031

SOURCE: New Significantly Modified **X** Modified/Direct

Bank Number SD-09 001

JUSTIFICATION:

a. Plausible since steam dump valves normally open on turbine trip. Condenser is not available due to no circ water pumps running on loss of offsite power.

b. Plausible since steam dump valves normally open on turbine trip. Condenser is not available due to no circ water pumps running on loss of offsite power.

c. Plausible since S/G PORVs can be controlled by steam dump system. PORVs are operated by steam dump system only if turbine trip does not exist.

d. **CORRECT** PORV normally operation is to open at 1035 psig to relieve pressure. PORVs are only operated by steam dump system if turbine has not tripped. Steam dumps are not available due to no Circ Water pumps available following loss of offsite power.

DIFFICULTY:
Comprehensive/Analysis **X** Memory Rating 3

Analysis of plant conditions to determine mode of operation for steam dumps.

REFERENCES SUPPLIED: NONE

STEAM DUMP ARMING SIGNAL LOGIC

SD-FIGURE-2 (Rev . 3)

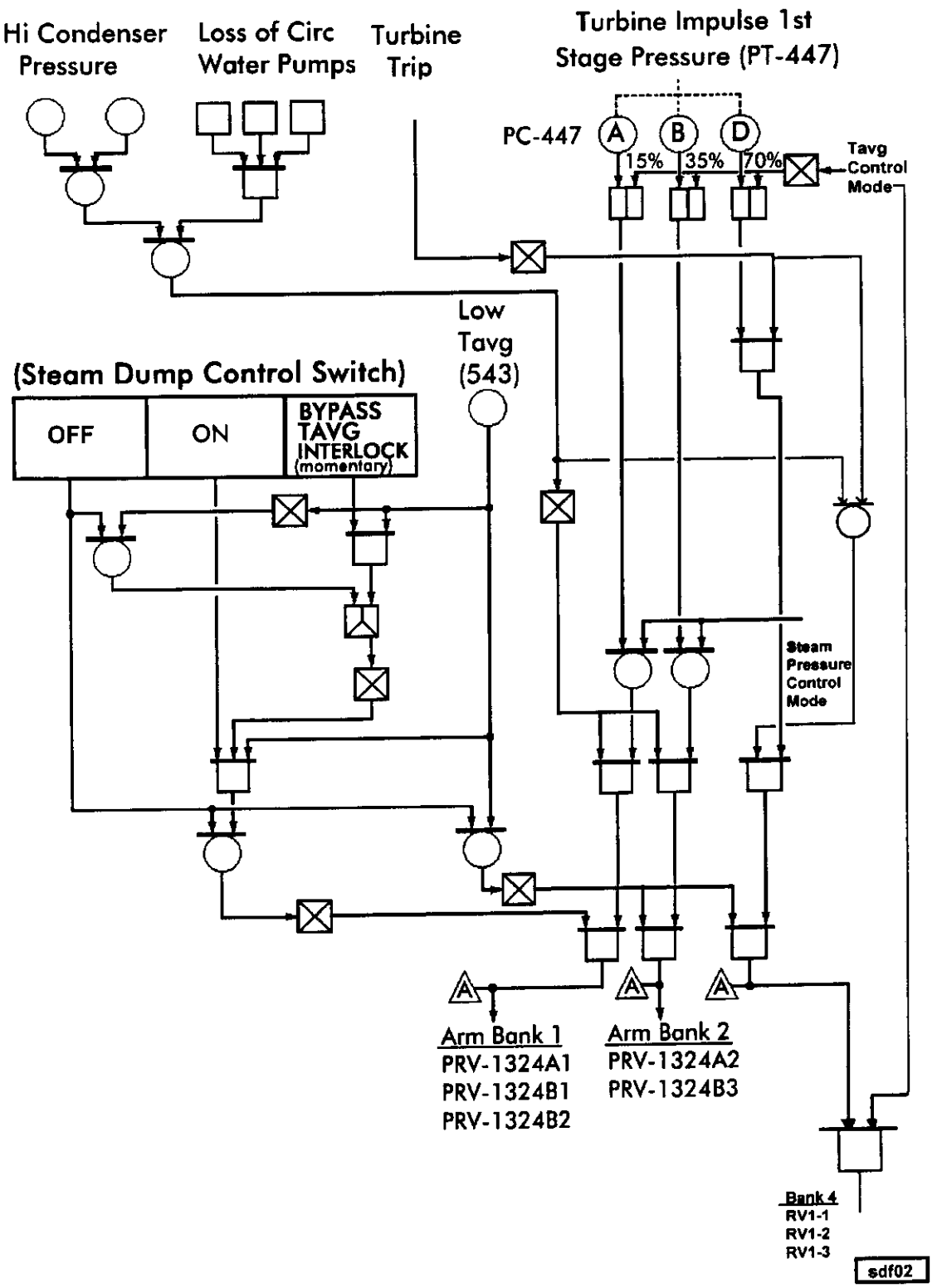

(PM-447A)	3 Steam dumps	1	15% of full load
(PM-447B)	2 Steam dumps	2	35% of full load

(PM-447D) will cause the 3 S/G PORVs, Bank 4, to activate if reduction is 70% of full load

4.1.3 Temperature Bistables and Controllers (SD-Figures 4, 5 & 7)

Temperature bistables are provided to trip open the valves if they are armed. The trip open feature is accomplished by solenoids that bypasses the positioner and apply nitrogen directly to the steam dump valves or instrument air directly to the S/G PORVs. The bistables that are allowed to trip open the valves are determined by whether or not the turbine is tripped. If the signal is not sufficient to trip the bistables, the valves may be modulated by the turbine trip or load rejection controller.

a. Turbine not tripped (Load Rejection)
The bistables and controller for a load rejection receive their signals from median T_{avg} and first stage pressure (PT-446).

1. High (T_{avg} - T_{ref}) three valves trip open
(Bistable TC-408F1) 12.1 F

2. High (T_{avg} - T_{ref}) two valves trip open
(Bistable TC-408F2) 16.6 F

3. High (T_{avg} - T_{ref}) three PORVs trip open
(Bistable TC-408P) 32.5 F

4. Load Rejection Controller (T_{avg} Mode)
Deadband 5 F
Output 0 to 10% for (T_{avg} - T_{ref})
5 to 32.5 F

4.1.4 Low T_{avg} Interlock

The steam dump valves will lose their arming signal if 2/3 Low T_{avg} (543 F) signals are received. This signal comes from T_{avg} protection channels and will lock out the steam dumps to prevent inadvertent cooldown due to steam dump valves.

With T_{avg} less than 543 F, three of the dumps (Bank 1) can be made operable by operator action to bypass the T_{avg} interlock. This limits the cooldown rate available from the steam dump system.

4.2 Power Operated Relief Valve Controls

The controls for the S/G PORVs are located in the Secondary Control Panel on the mezzanine level of the turbine building, with the exception of the automatic setpoint adjustment potentiometer which is located on the RTGB. Their normal setpoint at power is 1035 psig, which is 30 psi above the pressure corresponding to the no load Tavg of 547 F. The setpoint can be can be changed by adjusting the potentiometer on the RTGB. This 10 turn potentiometer controls over a 0 - 1500 psig range, with a setting of 10.0 corresponding to 0 psig. This controller is reverse acting. Instead of the potentiometer increasing setpoint with increased value, raising the setting decreases the setpoint at which the pressure will be controlled. When actual pressure increases to the setpoint, the PORV throttles open to relieve pressure.

The controllers for each S/G PORV (PIC-477, PC-487 and PC-497), are adjusted at the secondary control panel. These controllers are pneumatic (with no electronics) and sense S/G pressure directly off the main steam lines upstream of the MSIVs. The directions for adjusting these controllers, which requires coordination between the Outside Auxiliary Operator and the Control Room, are contained in GP-001.

The PORVs can only be controlled by the steam dump controller if the system is selected to Tave mode ,and then, only if a turbine trip has not occured.

4.2.1 Switches

There are three DEFEAT switches located at the Secondary Control Panel to allow manual control of the S/G PORVs from the Secondary Control Panel. After placing each switch in the DEFEAT position, the S/G PORV is controlled by selecting MANUAL on the transfer switch located inside the controller box and using the manual thumbwheel on the pressure controller. When in the DEFEAT position, automatic control from the RTGB is removed as is the ability to place the S/G PORV under steam dump control in the event of a 70% load rejection without a turbine trip. Remote indication of this action

SD-09 001

Given the following plant conditions:

- The unit trips due to a loss of condenser vacuum
- All three Circulating Pumps are running
- Actual vacuum eventually levels off at 12 inches Hg absolute
- The demand signal on the Steam Dump pressure controller is at 50%
- The operator transfers the Steam Dump Mode switch from Tavg Mode to Steam Press Mode

Which ONE (1) of the following provides the response of the steam dump valves?

A. Three valves modulate open.

B. Two valves modulate open.

✓C. All valves remain closed.

D. All valves modulate open.

Question: 98

A fire has occurred inside a Locked High Radiation Area (LHRA).

Which ONE (1) of the following identifies the MINIMUM required authorization for the Fire Brigade to enter this area **AND** the MINIMUM expected radiation levels in the area?

	AUTHORIZATION REQUIRED	**RADIATION LEVELS**
a.	On-Call Manager	> 500 Rad/hr
b.	On-Call Manager	> 1000 mRem/hr
c.	SSO	> 500 Rad/hr
d.	SSO	> 1000 mRem/hr

Answer:

d.	SSO	> 1000 mRem/hr

QUESTION NUMBER: 98
TIER/GROUP: 1/1

K/A: 068G2.3.4
Knowledge of radiation exposure limits and contamination control, including permissible levels in excess of those authorized. (Control Room Evacuation)

K/A IMPORTANCE: RO 2.5

10CFR55 CONTENT: 55.41(b) RO 12

OBJECTIVE: 10CFR20-03
Identify the Dose Limits for adults including: a. Occupational Dose Limits

REFERENCES: AOP-031

SOURCE: New Significantly Modified **X** Modified/Direct

Bank Number AP-031-03 001

JUSTIFICATION:

a. Plausible since this is the radiation level and authorization required for a Very High Radiation Level. Not the requirements/level for LHRA.
b. Plausible since this is the radiation level for a LHRA. Level of authorization is SSO.
c. Plausible since this is the level of authorization required. Rad level is 1000 mRem/hour.
d. **CORRECT** SSO may authorize entry. LHRA is accessible area where whole body dose equivalent is greater than 1000 mRem per hour.

DIFFICULTY:
Comprehensive/Analysis Memory **X** Rating 2

Knowledge of radiological definitions and authorization.

REFERENCES SUPPLIED: NONE

8.9.4 Individuals should perform job coverage in an LHRA or VHRA during emergency conditions as designated below:

- Fire support qualified Radiation Control Technicians onsite should respond to the fire and provide Radiation Control coverage for the entry.
- A licensed operator should provide Radiation Control coverage for the Fire Brigade in the event the RC Technician must leave the area for additional emergency response.
- A licensed operator should provide Radiation Control coverage if there are no fire support qualified RC Technicians available.
- Operations personnel can perform self coverage in an emergency situation when an RC Technician is not available.

8.9.5 Documentation should be completed as applicable, as time permits.

8.9.6 Review any applicable attachments for discrepancies and make the appropriate corrections.

8.9.7 Forward applicable attachments to RC Supervision for final review as applicable.

5.0 PRECAUTIONS AND LIMITATIONS

5.1 Locked High Radiation Areas shall be keyed in a manner such that a single key provides access to common locked areas. Locked High Radiation Areas are High Radiation Areas accessible to individuals in which radiation levels from radiation sources external to the body could result in an individual receiving a dose equivalent in excess of 1000 mrem in one hour at 30 centimeters from the radiation source or 30 centimeters from any surface that the radiation penetrates. An LHRA shall be personally manned or common keyed to prevent unauthorized access.

> **NOTE:** If control for radiological safety is deemed necessary by the Radiation Control Supervisor or designee, then areas may be keyed as Locked High Radiation Areas that do not meet this definition.

5.2 Very High Radiation Areas shall be uniquely keyed in such a manner that a single key provides access to a single lock. Very High Radiation Areas are those areas, accessible to individuals, in which radiation levels from radiation sources external to the body could result in an individual receiving an absorbed dose in excess of 500 rads in one hour at one meter from a radiation source or one meter from any surface that the radiation penetrates. A VHRA shall be personally manned or individually keyed to prevent unauthorized access.

> **NOTE:** Such areas would include the spent resin storage tank, the containment sump when the thimbles are withdrawn, and the area below the transfer canal during fuel movement

5.3 The access to LHRAs and VHRAs shall be physically challenged to ensure the locking mechanism is engaged and secure.

5.4 A Master Locked High Radiation Area Key shall be provided for upgrading or downgrading the locking characteristic of an LHRA, HRA or RA door. This key will not allow access to an LHRA, HRA, or RA.

5.5 The Lead RC Person Onsite is identified as the RC individual onsite with the highest authority in the E&RC Unit (e.g., E&RC Shift Outage Manager, RC Superintendent, RC Supervisor, Lead RC Technician).

5.6 The LHRA briefing is for key control, door control, and any other concerns that are in addition to the ALARA briefing. The LHRA briefing is **not** to replace the ALARA briefing.

8.9 Emergency Entry Into An LHRA or VHRA

CAUTION

Radiological safety should always be a consideration when entering an LHRA or VHRA. However, nothing in this procedure shall prohibit entry during a plant or personnel emergency condition as determined by the Unit 2 Superintendent Shift Operations.

8.9.1 **IF** the Unit 2 Superintendent of Shift Operations deems an emergency exist that could result or have the potential for resulting in a declared emergency or other emergencies requiring action to prevent damage to equipment or degradation of plant conditions, **THEN** the SSO **MAY** authorize individuals to obtain keys for entry into an LHRA from the following locations during a plant or personnel emergency:

- RC Shift Technician (non-outage only)
- RC Supervision/designee onsite
- Unit 2 Control Room
- Old Fire Protection Building
- Emergency Key boxes located near the entrances to LHRA's
- LHRA key box located at the RCA Entrance Area

8.9.2 **IF** the Unit 2 Superintendent of Shift Operations deems an emergency exist that could result or have the potential for resulting in a declared emergency or other emergencies requiring action to prevent damage to equipment or degradation of plant conditions, **THEN** the SSO **MAY** authorize individuals to obtain keys for entry into a VHRA from the following locations during a plant or personnel emergency:

- RC Superintendent/designee
- VHRA key box located at the RCA Entrance Area.

NOTE: The VHRA key box located at the RCA Entrance Area may be accessed by obtaining the key located in the red Emergency Use Only VHRA key box. The red emergency key box is located at the RCA Entrance Area.

8.9.3 Approval must be obtained from the RC Superintendent or Superintendent Shift Operations to access the VHRA key box located at the RCA Entrance Area.

AP-031-03 001

Which ONE (1) of the following describes the conditions under which a Locked High Radiation Area (LHRA) key may be issued during critical operations?

A. The LHRA Entry Form has been completed by the requester and approved by the Radiological Controls (RC) Supervisor.

B. The RC Supervisor has approved the LHRA Entry Form and informed the Unit 2 Control Operator.

C. The RC Supervisor has approved the LHRA Entry Form and informed the Unit 2 Shift Supervisor to maintain power level constant.

✓D. The LHRA Entry Form has been approved by the RC Supervisor and verbal concurrence has been received from the Unit 2 Shift Supervisor.

Question: 98

A fire has occurred inside a Locked High Radiation Area (LHRA).

Which ONE (1) of the following identifies the minimum required authorization for the Fire Brigade to enter this area **and** the MINIMUM expected radiation levels in the area?

	AUTHORIZATION REQUIRED	RADIATION LEVELS
a.	On-Call Manager	> 500 Rad/hr
b.	On-Call Manager	> 1000 mRem/hr
c.	SSO	> 500 Rad/hr
d.	SSO	> 1000 mRem/hr

must RCSO

? DI SCUSS approved

Answer:

d.	SSO	> 1000 mRem/hr

QUESTION NUMBER: 98
TIER/GROUP: 1/1

K/A: 068G2.3.4
Knowledge of radiation exposure limits and contamination control, including permissible levels in excess of those authorized. (Control Room Evacuation)

K/A IMPORTANCE: RO 2.5

10CFR55 CONTENT: 55.41(b) RO 12

OBJECTIVE: 10CFR20-03
Identify the Dose Limits for adults including: a. Occupational Dose Limits

REFERENCES: AOP-031

SOURCE: New Significantly Modified **X** Modified/Direct

Bank Number AP-031-03 001

JUSTIFICATION:

a. Plausible since this is the radiation level and authorization required for a Very High Radiation Level. Not the requirements/level for LHRA.

b. Plausible since this is the radiation level for a LHRA. Level of authorization is SSO.

c. Plausible since this is the level of authorization required. Rad level is 1000 mRem/hour.

d. **CORRECT** SSO may authorize entry. LHRA is accessible area where whole body dose equivalent is greater than 1000 mRem per hour.

DIFFICULTY:
Comprehensive/Analysis Memory **X** Rating 2

Knowledge of radiological definitions and authorization.

REFERENCES SUPPLIED: NONE

ok

Question: 99

Given the following conditions:

- Waste Gas Decay Tank #2 is being released to the Plant Vent.
- R-14, Plant Vent Monitor, reaches the HIGH alarm setpoint.

Which ONE (1) of the following actions automatically occur?

a. HVE-2A/B, Auxiliary Building Exhaust Fans, trip

b. RCV-014, Gas Release Valve, closes

c. WD-1630, Waste Gas Decay Tank 'B' Supply to CVCS HUT, opens

d. HVS-2 and HVE-14, Lower Fuel Building Supply and Exhaust Fans, trip

Answer:

b. RCV-014, Gas Release Valve, closes

QUESTION NUMBER: 99
TIER/GROUP: 2/1

K/A: 071K4.04
Knowledge of design feature(s) and/or interlock(s) which provide for the following: Isolation of waste gas release tanks

K/A IMPORTANCE: RO 2.9

10CFR55 CONTENT: 55.41(b) RO 13

OBJECTIVE: WD-09
Explain the normal operation of the Waste Disposal control systems. Include function, instrumentation, interlocks, annunciators, and setpoints.

REFERENCES: SD-019
SD-023

SOURCE: New Significantly Modified **X** Modified/Direct

Bank Number WD-09 004

JUSTIFICATION:

a. Plausible since fans tripping would terminate release to atmosphere via stack. WGDT outlet closes to terminate release.

b. **CORRECT** High rad alarm on R-14 causes WGDT discharge valve to close.

c. Plausible since opening this valve would align WGDT to another tank. WGDT discharge closes to terminate release.

d. Plausible since these fans supply ventilation to area containing WGDTs. WGDT outlet closes to terminate release.

DIFFICULTY:
Comprehensive/Analysis Memory **X** Rating 2

Knowledge of automatic action on high radiation level during WGDT release.

REFERENCES SUPPLIED: NONE

ATTACHMENT 10.2
Page 1 of 2

RMS INSTRUMENT CONTROL FUNCTIONS

MONITOR	MEDIUM MONITORED	FUNCTION
R-1	Control Room Air	Switches Control Room ventilation into the emergency pressurization operating mode.
R-11	CV Air or Stack Particulate	Closes C.V. purge supply and exhaust; pressure and vacuum relief valves.
R-12	CV Air or Stack Gas	Same function as R-11
R-14C	Stack Gas (Low Range)	Closes waste gas decay tank release valve (RCV-014); swaps R-14 Skid over to high range (two different setpoints).
R-14D	Stack Gas (Mid Range)	Swaps R-14 Skid over to low range.
R-18	Liquid Waste Disposal	Closes waste disposal system liquid release valve (RCV-018)
NOTE The blowdown tank release isolation valve (V1-31) will close if all three SG monitors (R-19A, R-19B and R-19C) are in alarm.		
R-19A	SG "A" Blowdown	Closes; blowdown isolation valves FCV-1930A & FCV-1930B, sample isolation valves FCV-1933A & FCV-1933B, rate flow control valve FCV-4204A.

INFORMATION ONLY

WASTE GAS SYSTEM

WD-FIGURE-9 (Rev . 0b)

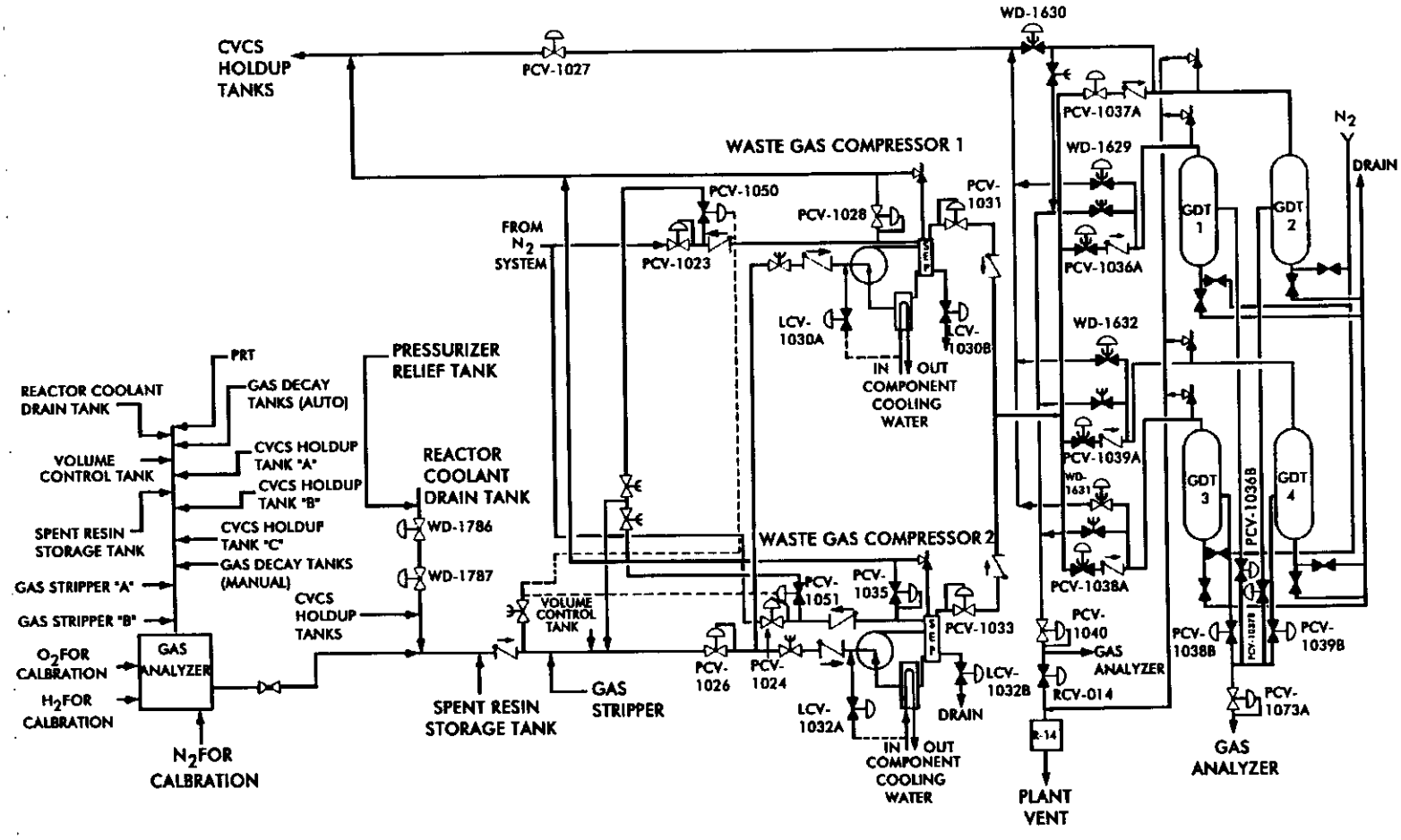

ALARM

PROCESS MONITOR HI RAD *** WILL REFLASH ***

AUTOMATIC ACTIONS/CAUSES

CHANNEL	AUTO ACTION	CAUSE
R-11 R-12	1) HVE-1A **AND** HVE-1B stop. 2) V12-6 closes 3) V12-7 closes 4) V12-8 closes 5) V12-9 closes 6) V12-10 closes 7) V12-11 closes 8) V12-12 closes 9) V12-13 closes	RCS leak
R-14C	RCV-014 closes.	WGDT leak or Safety lift
R-18	RCV-018 closes.	WDS Effluent leakage
ALL	V1-31 closes.	Primary to Secondary leak
R-19A	1) FCV-1930A **AND** B close. 2) FCV-1933A **AND** B close. 3) FCV-4204A closes.	
R-19B	1) FCV-1931A **AND** B close. 2) FCV-1934A **AND** B close. 3) FCV-4204B closes	
R-19C	1) FCV-1932A **AND** B close. 2) FCV-1935A **AND** B close. 3) FCV-4204C closes.	
R-21	HVE-15 stops.	Fuel Handling accident. Low level in SFP.

OBSERVATIONS

1. Reading on affected channel(s)

WD-09 004

Which ONE (1) of the following correctly describes the operation of RCV-014, GAS RELEASE VALVE?

Controlled from the:

A. RTGB and automatically shuts at 5 psid.

✓B. WDBRP and automatically shuts if R-14 alarms.

C. RTGB and automatically shuts if R-14 alarms.

D. WDBRP and automatically shuts at 5 psid.

Question: 100

Given the following plant conditions:

- The plant was operating at 100% power.
- A turbine runback has occurred.
- The following annunciators are illuminated:
  - APP-005-A3, PR DROP ROD ROD STOP
  - APP-005-B5, ROD BANKS A/B/C/D LO LIMIT
  - APP-005-C3, PR CHAN DEV
  - APP-005-C5, ROD BANKS A/B/C/D LO-LO LIMIT
  - APP-005-F2, ROD BOTTOM ROD DROP

Which ONE (1) of the following procedures should be used to mitigate this plant transient?

a. AOP-001, Malfunction of Reactor Control System

b. AOP-015, Secondary Load Rejection or Turbine Runback

c. AOP-024, Loss of Instrument Buses

d. AOP-025, RTGB Instrument Failures

Answer:

a. AOP-001, Malfunction of Reactor Control System

QUESTION NUMBER: 100
TIER/GROUP: 3

K/A: 2.4.31
Knowledge of annunciators alarms and indications, and use of the response instructions.

K/A IMPORTANCE: RO 3.3

10CFR55 CONTENT: 55.41(b) RO 10

OBJECTIVE: AOP-001-02
Recognize the selected entry level conditions of AOP-001.

REFERENCES: AOP-001
AOP-015
AOP-024
AOP-025

SOURCE: New Significantly Modified Modified/Direct **X**

Bank Number AOP-001-02 007

JUSTIFICATION:

a. **CORRECT** A dropped rod is indicated. This is addressed by AOP-001. All alarm windows provide cue to address this procedure.

b. Plausible since a runback may have occurred due to the dropped rod. Four of five given alarm windows reference performing AOP-015. AOP-015 is used for runbacks due to PR channel failures or load rejections.

c. Plausible since a loss of an instrument bus may result in a PR dropped rod runback. Two of five given alarm windows reference performing AOP-024. No additional indications of loss of instrument bus are given.

d. Plausible since entry conditions specifically address not using this procedure in the event of a PR failure and may incorrectly recall statement. No indication of any failed instruments is given.

DIFFICULTY:
Comprehensive/Analysis Memory **X** Rating 2

Knowledge of entry conditions for AOPs.

REFERENCES SUPPLIED: NONE

STEP	INSTRUCTIONS	RESPONSE NOT OBTAINED

1. PURPOSE

This procedure provides the instructions necessary for the Operator to recover a dropped rod, realign a misaligned rod, stop abnormal continuous rod motion and operate with an IRPI failure.

This procedure is applicable in Modes 1, 2, and 3.

2. ENTRY CONDITIONS

Any indication of a dropped rod, misaligned rod, unwarranted rod motion, inability to move rod(s) or suspected IRPI malfunction.

- END -

Purpose and Entry Conditions

(Page 1 of 1)

1. **PURPOSE**

The purpose of this procedure is to provide instructions to stabilize plant conditions following a secondary load rejection or Turbine runback.

> **NOTE**
>
> Entry to AOP-015 is **NOT** required if a PR NIS failure occurs **AND** a runback fails to actuate.

2. **ENTRY CONDITIONS**

a. This procedure is entered upon a secondary load rejection or Turbine runback caused by a failure of a PR NIS.

b. When directed from AOP-026, Low Frequency Operation.

- END -

Purpose and Entry Conditions

(Page 1 of 1)

1. PURPOSE

The purpose of this procedure is to provide instructions to be followed in the event of a loss of power to any Instrument Bus (excluding the Instrument Bus for RPI).

This procedure is applicable under Modes 1, 2, and 3.

2. ENTRY CONDITIONS

This procedure is entered on any indication of a Loss of an Instrument Bus (excluding Instrument Bus for RPI).

- END -

Purpose & Entry Conditions

(Page 1 of 1)

1. PURPOSE

This procedure provides instructions for failure of process variable transmitters which provide input to RTGB controllers.

IF an applicable transmitter fails while the controller is operating in manual OR is being fed from an alternate channel, THEN entry to this procedure is NOT required.

This procedure is applicable in Modes 1, 2, 3, and 4.

2. ENTRY CONDITIONS

Failure of any process variable transmitter which affects automatic operation of RTGB controllers with the following exceptions:

- FT-605, RHR Flow
- LT-115, VCT Level
- LT-112, VCT Level
- PR NIS (NI-41, 42, 43, & 44)

- END -

Question: 100

Given the following plant conditions:

- The plant was operating at 100% power.
- A plant transient has occurred.
- The following annunciators are illuminated:

  - APP-005-B5, ROD BANKS A/B/C/D LO LIMIT
  - APP-005-F2, ROD BOTTOM ROD DROP
  - APP-005-A3, PR DROP ROD ROD STOP

Which ONE (1) of the following procedures should be used to mitigate this plant transient?

a. AOP-001, Malfunction of Reactor Control System

b. AOP-015, Secondary Load Rejection or Turbine Runback

c. AOP-024, Loss of Instrument Buses

d. AOP-025, RTGB Instrument Failures

Answer:

a. AOP-001, Malfunction of Reactor Control System

QUESTION NUMBER: 100
TIER/GROUP: 3

K/A: 2.4.31
Knowledge of annunciators alarms and indications, and use of the response instructions.

K/A IMPORTANCE: RO 3.3

10CFR55 CONTENT: 55.41(b) RO 10

OBJECTIVE: AOP-001-02
Recognize the selected entry level conditions of AOP-001.

REFERENCES: AOP-001
AOP-015
AOP-024
AOP-025

SOURCE: New Significantly Modified Modified/Direct **X**

Bank Number AOP-001-02 007

JUSTIFICATION:

a. **CORRECT** A dropped rod is indicated. This is addressed by AOP-001.
b. Plausible since a runback may have occurred due to the dropped rod. AOP-015 is used for runbacks due to PR channel failures.
c. Plausible since a loss of an instrument bus may result in a PR dropped rod runback. No additional indications of loss of instrument bus are given.
d. Plausible since entry conditions specifically address not using this procedure in the event of a PR failure and may incorrectly recall statement. No indication of any failed instruments is given.

DIFFICULTY:
Comprehensive/Analysis Memory **X** Rating 2

Knowledge of entry conditions for AOPs.

REFERENCES SUPPLIED: NONE

Question: 100

Given the following plant conditions:

- The plant was operating at 100% power.
- A turbine runback has occurred.
- The following annunciators are illuminated:

- APP-005-A3, PR DROP ROD ROD STOP
- APP-005-B5, ROD BANKS A/B/C/D LO LIMIT
- APP-005-C3, PR CHANNEL DEV
- APP-005-C5, ROD BANKS A/B/C/D LO-LO LIMIT
- APP-005-F2, ROD BOTTOM ROD DROP

Which ONE (1) of the following procedures should be used to mitigate this plant transient?

a. AOP-001, Malfunction of Reactor Control System

b. AOP-015, Secondary Load Rejection or Turbine Runback

c. AOP-024, Loss of Instrument Buses

d. AOP-025, RTGB Instrument Failures

Answer:

a. AOP-001, Malfunction of Reactor Control System