2. For each steam generator, provide a general description of areas examined, including the expansion criteria utilized and type of probe used in each area

Inspection	Base Scope	Number of Tubes A	Number of Tubes B	Probe	Expansion Criteria	Expanded Scope
Bobbin	100 %	15165	14669	Bobbin	N/A	N/A
Special Interest	based on bobbin exam results	563	1055	Plus Point	N/A	N/A
Upper Roll Transition	100% -2" below transition	15165	14669	Plus Point	N/A	N/A
Lower TS Crevice	3% Kidney Region	716	445	Plus Point	6 crack-like indications (A) 4 crack-like indications (B)	N/A found none.
20% Lane & Wedge One Tube Boundary Around Sleeved Tubes	20%	20	20	Plus Point	1 Crack-like indication	N/A No indicat found
I-600 Plugs	100%	20	47	Plus Point	N/A	N/A
Dents 02S-UTS	20%	105	38	Plus Point	1 Crack-like indication	N/A
Dents Adjacent to Explosive Plugged Tubes	100%	39	108	Plus Point	N/A	N/A
Sleeves	40% of B-OTSG (alternating sleeve inspections)	66	0	Bobbin	1 Crack-like indication	N/A
Sleeves	100% of B-OTSG 20% of A-OTSG	33 roll transition	159	Plus Point	1 Crack-like indication	N/A
Non-Stress Relieved Roll Transitions	2 tubes (100%)	2	2	Plus Point	N/A	N/A
First Span IGA	159 tubes 154	0	154	Bobbin & Plus Point 100%	N/A	Previously unidentified IGA indications

NQI

critical area surround crack tube.

High Cycle fatigue

2nd support plate to UTS ind in 1999 1 crack

Circumferential in

found Volumetric indication in dent. plug

IGA

Bobbin for roll region } sleeve
RPC roll transition

IIR – 3 tube parent crack

Bobbin HIGH Fro – regression growth for 0/0 ARC

Plus point – top of TS to 1S

identify Volumetric based on % TW and change % TW

Small population for expand scope.

first span IGA –

ENCLOSURE 2

ONCE-THROUGH STEAM GENERATOR

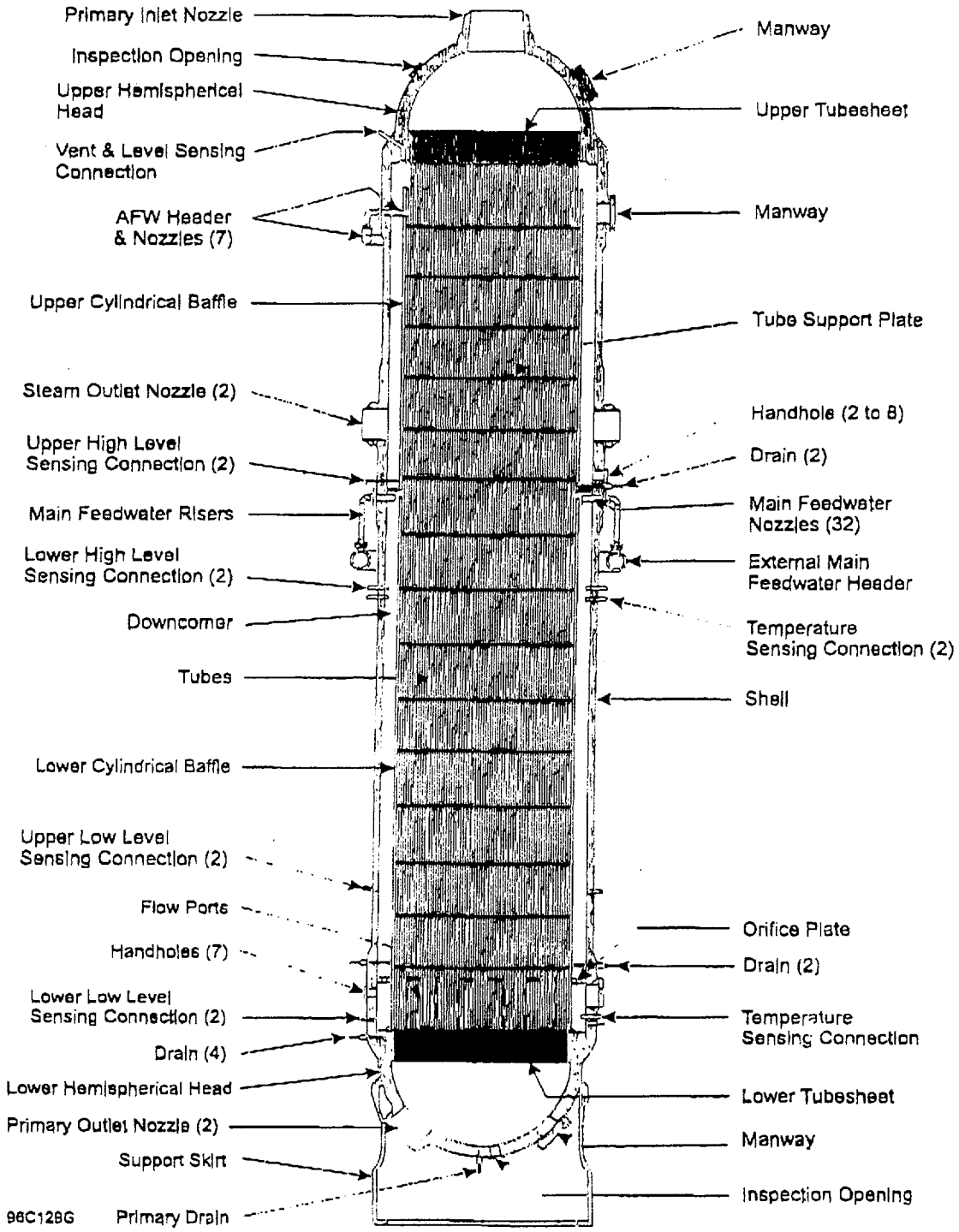

98C128G

Figure 3:
Typical Tube End Crack in the Tube-to-Tubesheet Joint

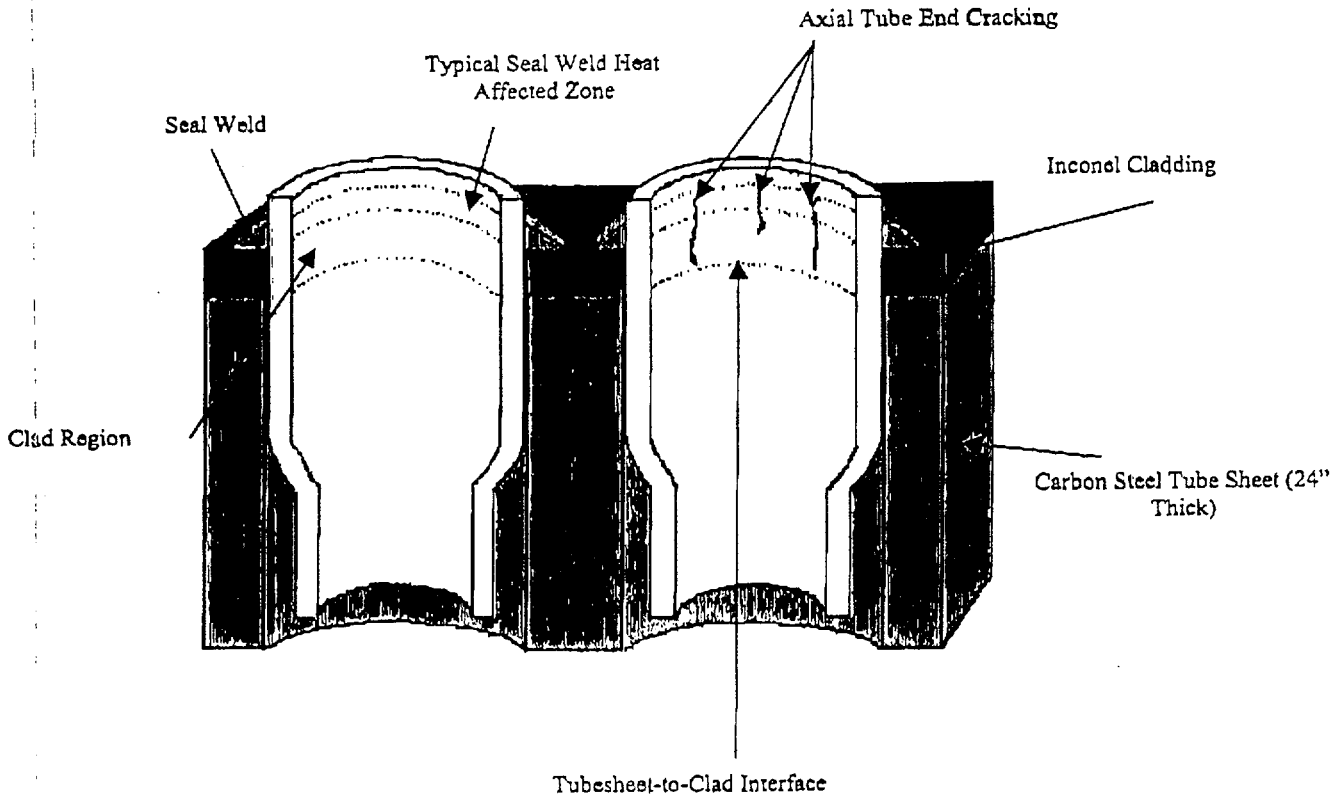

Figure 2:
Typical OTSG Tube-to-Tubesheet Joint

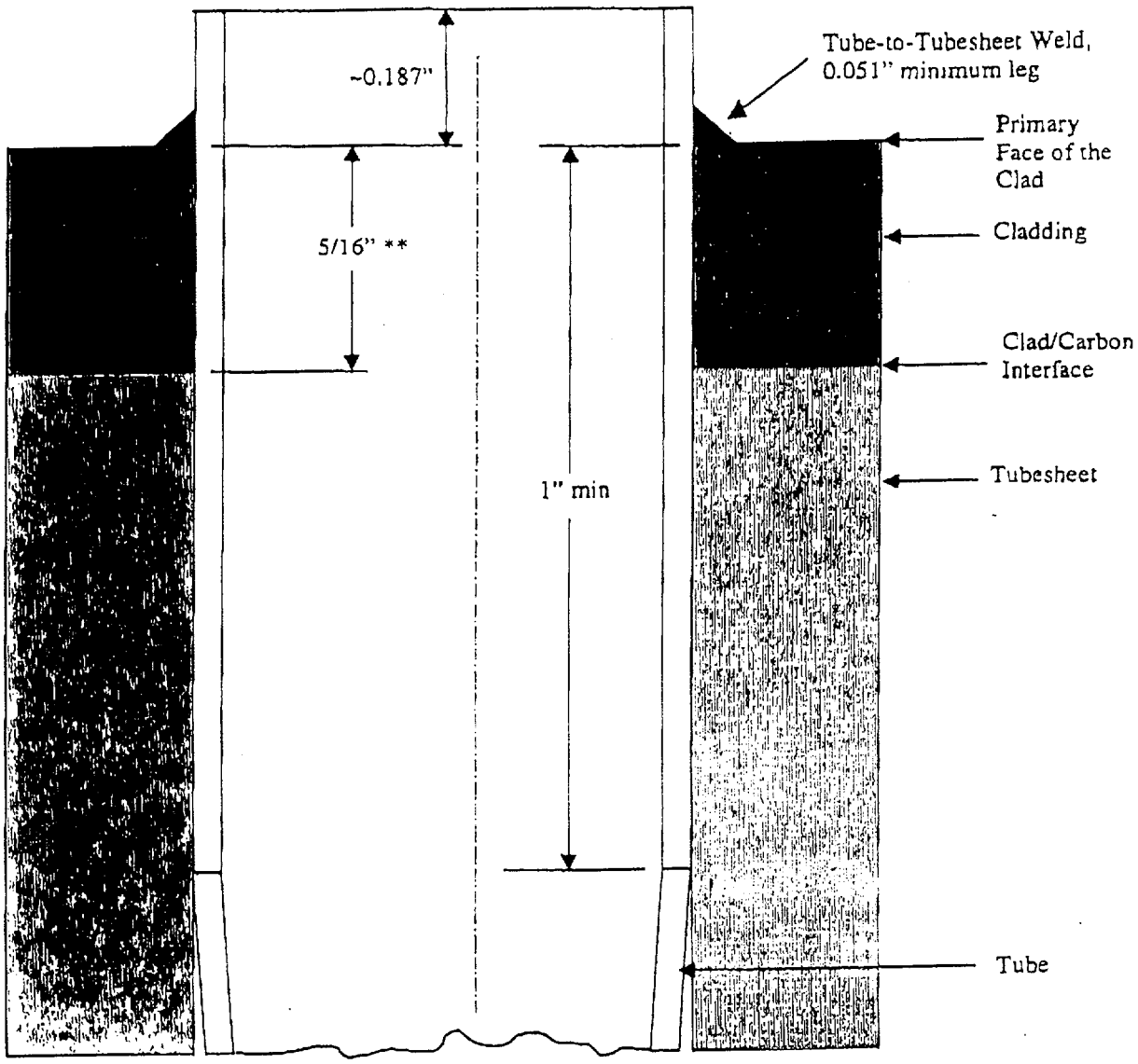

** Nominal Value. Actual clad thickness varies

EXHIBIT 1
OTSG STRUCTURAL DESIGN

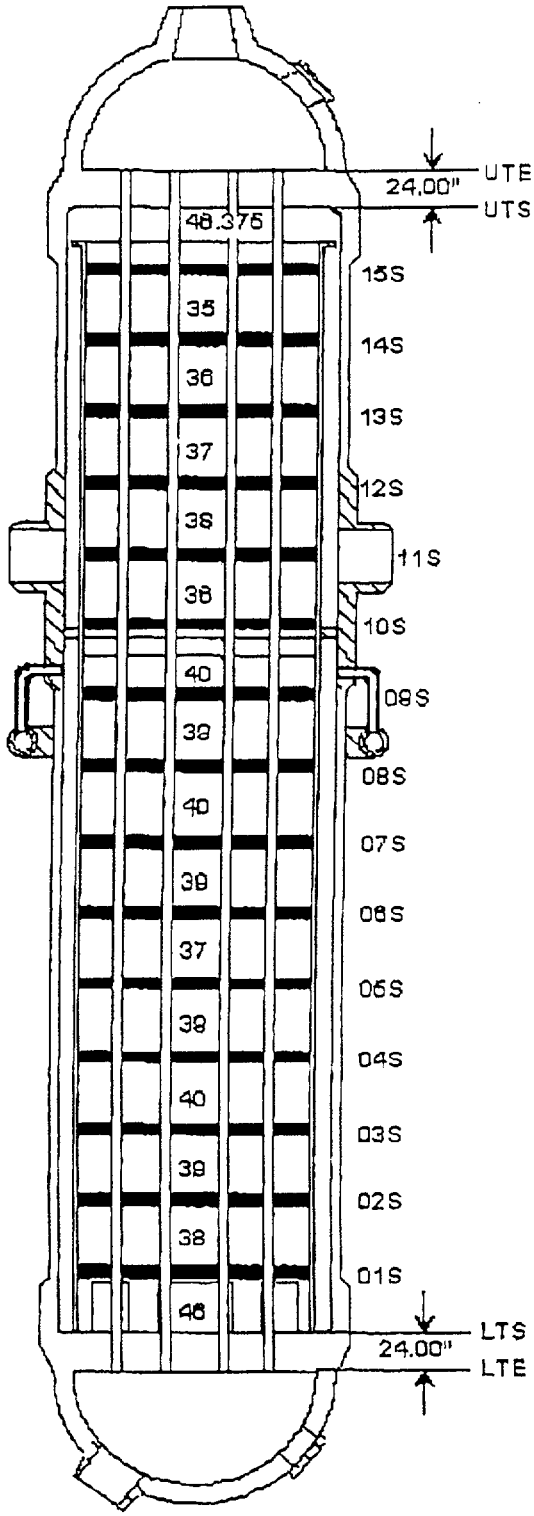

Tube Information

Number of Tubes:	15,531
Number of Rows:	151
Max Tubes/Row:	132
Tube Material:	Inconel 600
Nominal OD:	0.625 inch
Nominal ID:	0.551 inch
Nominal WT:	0.037 inch
Minimum WT:	0.034 inch
Tube Length:	673.375 inch

Tube Support Information

Tube Support Material: Carbon Steel
Tube Support Thickness: 1.50 inch
Tube Supports: All trefoil broached except the 15th TSP which is drilled in the periphery.

Tubesheet Information

Tubesheet is carbon steel, 24 inch thick (Primary 5/16" inconel clad)
Tubes are open crevice with a minimum 1.0 inch long roll in both the upper and lower tubesheet

Sleeve Information

Sleeve Material:	Inconel 690
Nominal OD:	0.525 inch
Nominal ID:	0.431 inch
Nominal WT:	0.047 inch
Sleeve Length:	80 inch
Roll Length:	1.00 inch

Number of Rolls: 3 (1 Upper and 2 Lower)

Typical Operating Parameters

Design Pressure (Pri): 2,500 psig
Design Pressure (Sec): 1,050 psig
Design Δ P: 1,450 psig
Design Temperature: 650°F

EXHIBIT 2
OTSG TUBESHEET DESIGN

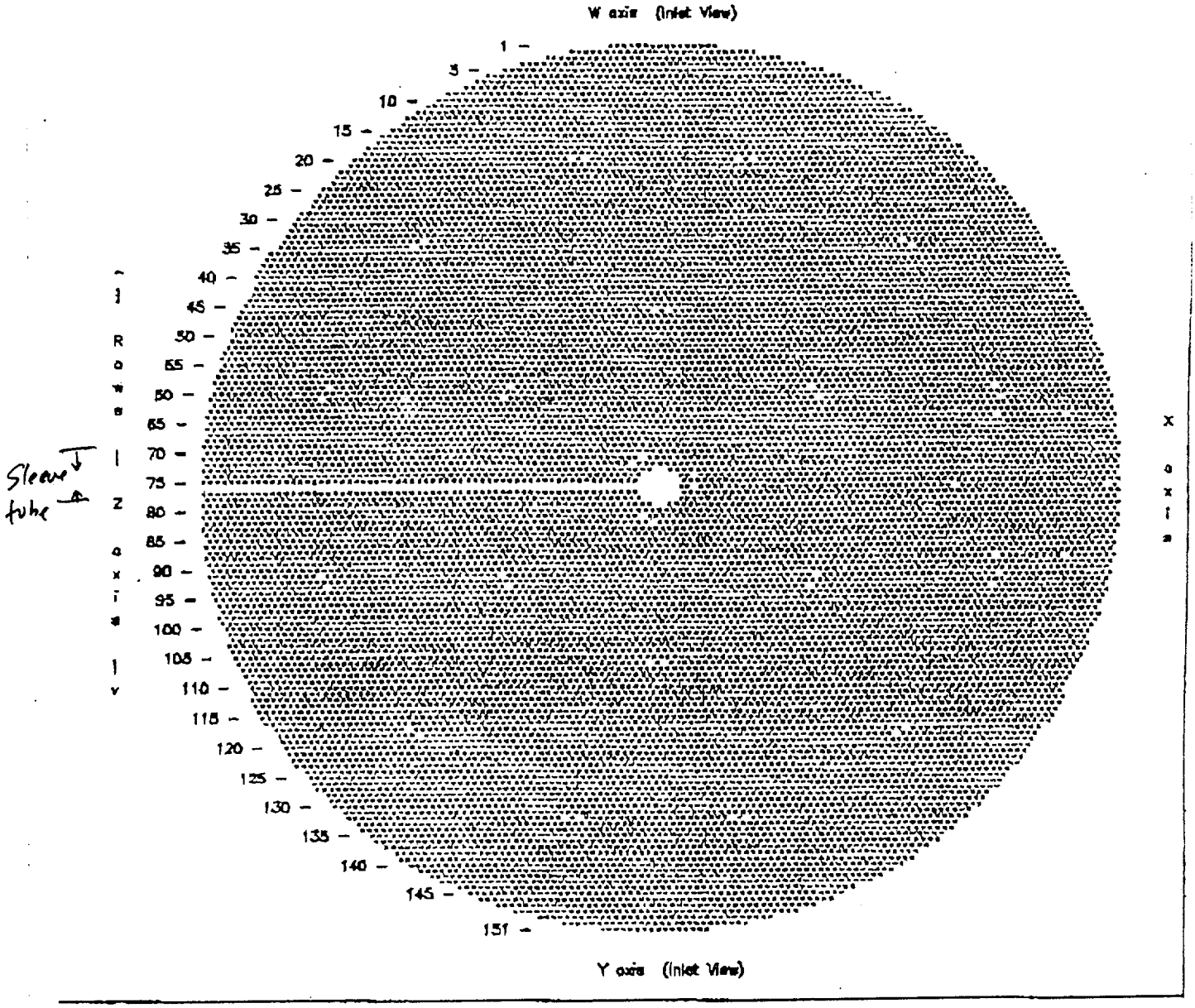

TYPICAL REPAIR ROLL PLACEMENT

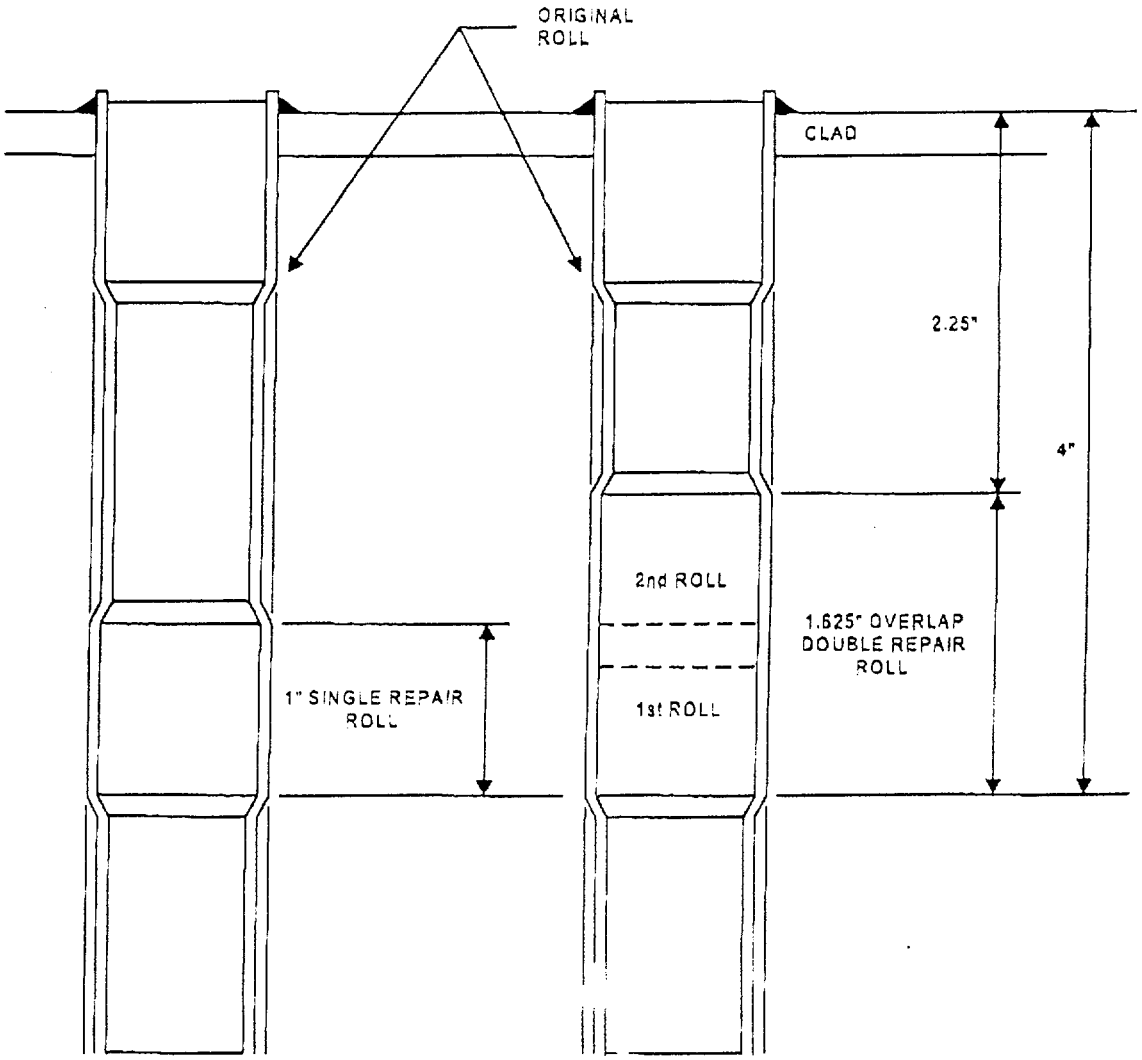

INFORMATION ONLY

Figure 1: CR-3 OTSG Tube Repair Roll Process