SUMMARY NUMBER	EXAMINATION AREA IDENTIFICATION	ASME SEC. XI CATGY ITEM NO	NDE METH	INSPECTION INTERVAL 1	2	PLAN STATUS FIRST PERIOD 1	SECOND PERIOD 2	3	THIRD PERIOD 1	2	PRESERVICE YEAR	INSTRUCTIONS **CALIBRATION BLOCK**
	MAIN STEAM 32-MS-2-003-1303-2											
685200	TCX-2-2300-H1 MS-2-003-405-C72K 894RB	F-C NOTE 1	VT-3	1 -	-	-	-	C	-	-	NA	SNUBBER. TDLR VERIFICATION BOUNDARY
685250	TCX-2-2300-H1 MS-2-003-405-C72K 894RB	C-C C3.20	MT	1 -	-	-	-	C	-	-	92	WELDED ATTACHMENT. TDLR VERIFICATION BOUNDARY.
685400	TCX-2-2300-H2 MS-2-003-407-C72K 896RB	F-C NOTE 1	VT-3	1 -	-	-	-	C	-	-	NA	SNUBBER. TDLR VERIFICATION BOUNDARY
685450	TCX-2-2300-H2 MS-2-003-407-C72K 896RB	C-C C3.20	MT	1 -	-	-	-	C	-	-	92	WELDED ATTACHMENT. TDLR VERIFICATION BOUNDARY.
685500	TCX-2-2300-H3 MS-2-003-409-C72K 894RB	F-C NOTE 1	VT-3	1 -	-	-	-	C	-	-	NA	SNUBBER. TDLR VERIFICATION BOUNDARY
685550	TCX-2-2300-H3 MS-2-003-409-C72K 894RB	C-C C3.20	MT	1 -	-	-	-	C	-	-	92	WELDED ATTACHMENT. TDLR VERIFICATION BOUNDARY.
685600	TCX-2-2300-H4 MS-2-003-410-C72K 894RB	F-C NOTE 1	VT-3	1 -	-	-	-	C	-	-	NA	SNUBBER. TDLR VERIFICATION BOUNDARY

SUMMARY NUMBER	EXAMINATION AREA IDENTIFICATION	ASME SEC. XI CATGY ITEM NO	NDE METH	INSPECTION INTERVAL	PLAN STATUS FIRST PERIOD 1	2	SECOND PERIOD 1	2	3	THIRD PERIOD 1	2	PRESERVICE YEAR	INSTRUCTIONS **CALIBRATION BLOCK**
	MAIN STEAM 32-MS-2-003-1303-2												
685650	TCX-2-2300-H4 MS-2-003-410-C72K 894RB	C-C C3.20	MT	1	-	-	-	-	C	-	-	92	WELDED ATTACHMENT. TDLR VERIFICATION BOUNDARY.
	MAIN STEAM 32-MS-2-004-1303-2												
686200	TCX-2-2400-H9 MS-2-004-403-C72S 877RB	F-C NOTE 1	VT-3	1	-	-	-	-	-	-	X	NA	SPRING. TDLR VERIFICATION BOUNDARY
686600	TCX-2-2400-H1 MS-2-004-407-C72K 890RB	F-C NOTE 1	VT-3	1	-	-	-	-	-	-	X	NA	SNUBBER. TDLR VERIFICATION BOUNDARY
686650	TCX-2-2400-H1 MS-2-004-407-C72K 890RB	C-C C3.20	MT	1	-	-	-	-	-	-	X	92	WELDED ATTACHMENT. TDLR VERIFICATION BOUNDARY.
686800	TCX-2-2400-H2 MS-2-004-409-C72K 884RB	F-C NOTE 1	VT-3	1	-	-	-	-	-	-	X	NA	SNUBBER. TDLR VERIFICATION BOUNDARY
686850	TCX-2-2400-H2 MS-2-004-409-C72K 884RB	C-C C3.20	MT	1	-	-	-	-	-	-	X	92	WELDED ATTACHMENT. TDLR VERIFICATION BOUNDARY.
686900	TCX-2-2400-H11 MS-2-004-415-S72R 877SB	F-C NOTE 1	VT-3	1	-	-	-	-	-	-	X	NA	STRUT. TDLR VERIFICATION BOUNDARY

SUMMARY NUMBER	EXAMINATION AREA IDENTIFICATION	ASME SEC. XI CATGY ITEM NO	NDE METH	INSPECTION INTERVAL FIRST PERIOD 1	2	PLAN STATUS SECOND PERIOD OUTAGE 1	2	3	THIRD PERIOD OUTAGE 1	2	PRESERVICE YEAR	INSTRUCTIONS **CALIBRATION BLOCK**
	MAIN STEAM 8-MS-2-240-1303-2											
687300	TCX-2-2200-H12 MS-2-240-401-S72K R109C885SB	F-C NOTE 1	VT-3	1 -	-	C	-	-	-	-	NA	SNUBBER. TDLR VERIFICATION BOUNDARY
687400	TCX-2-2200-H13 MS-2-240-402-S72K R109C885SB	F-C NOTE 1	VT-3	1 -	-	C	-	-	-	-	NA	SNUBBER. TDLR VERIFICATION BOUNDARY
	RESIDUAL HEAT REMOVAL 12-RH-2-004-601R-2											
688400	TCX-2-2501-H1 RH-2-004-403-S42R 813SB	F-C NOTE 1	VT-3	1 -	-	-	-	-	-	X	NA	STRUT
688450	TCX-2-2501-H1 RH-2-004-403-S42R 813SB	C-C C3.20	PT	1 -	-	-	-	-	-	X	92	WELDED ATTACHMENT
688700	TCX-2-2501-H12 RH-2-004-407-S32S 803SB	F-C NOTE 1	VT-3	1 -	-	-	-	-	-	X	NA	SPRING
688900	TCX-2-2501-H14 RH-2-004-409-S32R 800SB	F-C NOTE 1	VT-3	1 -	-	-	-	-	-	X	NA	STRUT
	RESIDUAL HEAT REMOVAL 16-RH-2-007-601R-2											
689000	TCX-2-2500-H1 RH-2-007-405-S22K 775SB	F-C NOTE 1	VT-3	1 -	-	-	-	-	-	X	NA	SNUBBER

SUMMARY NUMBER	EXAMINATION AREA IDENTIFICATION	ASME SEC. XI CATGY ITEM NO	NDE METH	INSPECTION INTERVAL	PLAN STATUS FIRST PERIOD 1	2	SECOND PERIOD 1	2	3	THIRD PERIOD 1	2	PRESERVICE YEAR	INSTRUCTIONS **CALIBRATION BLOCK**
	RESIDUAL HEAT REMOVAL 16-RH-2-007-601R-2												
689050	TCX-2-2500-H1	C-C	PT	1	-	-	-	-	-	-	X	92	WELDED ATTACHMENT
	RH-2-007-405-S22K	C3.20											
	775SB												
	RESIDUAL HEAT REMOVAL 16-RH-2-008-601R-2												
689400	TCX-2-2501-H15	F-C	VT-3	1	-	-	-	-	-	-	X	NA	STRUT
	RH-2-008-402-S22R	NOTE 1											
	787SB												
689600	TCX-2-2501-H2	F-C	VT-3	1	-	-	-	-	-	-	X	NA	SNUBBER
	RH-2-008-405-S22K	NOTE 1											
	784SB												
689650	TCX-2-2501-H2	C-C	PT	1	-	-	-	-	-	-	X	92	WELDED ATTACHMENT
	RH-2-008-405-S22K	C3.20											
	784SB												
689800	TCX-2-2501-H19	F-C	VT-3	1	-	-	-	-	-	-	X	NA	SPRING
	RH-2-008-407-S22S	NOTE 1											
	774SB												
	RESIDUAL HEAT REMOVAL 8-RH-2-028-151R-2												
693500	TCX-2-2579-H1	F-C	VT-3	1	-	C	-	-	-	-	-	NA	BOX
	RH-2-028-402-S32A	NOTE 1											
	R070 806SB												

SUMMARY NUMBER	EXAMINATION AREA IDENTIFICATION	ASME SEC. XI CATGY ITEM NO	NDE METH	INSPECTION INTERVAL	PLAN STATUS FIRST PERIOD 1	FIRST PERIOD 2	OUTAGE 1	OUTAGE 2	OUTAGE 3	SECOND PERIOD 1	SECOND PERIOD 2	THIRD PERIOD	PRESERVICE YEAR	INSTRUCTIONS **CALIBRATION BLOCK**
	RESIDUAL HEAT REMOVAL 8-RH-2-028-151R-2													
693550	TCX-2-2579-H1	C-C	PT	1 -		C	-	-	-	-	-		92	WELDED ATTACHMENT
	RH-2-028-402-S32A	C3.20												
	R070 806SB													
693600	TCX-2-2579-H5	F-C	VT-3	1 -		C	-	-	-	-	-		NA	SNUBBER
	RH-2-028-404-S32K	NOTE 1												
	R076 806SB													
	SAFETY INJECTION 4-SI-2-001-2501R-2													
696300	TCX-2-2564-H13	F-C	VT-3	1 C		-	-	-	-	-	-		NA	SNUBBER
	SI-2-001-424-S42K	NOTE 1												
	R77N 827SB													
	SAFETY INJECTION 4-SI-2-021-2501R-2													
697000	TCX-2-2564-H17	F-C	VT-3	1 C		-	-	-	-	-	-		NA	SPRING
	SI-2-021-404-S42S	NOTE 1												
	R77N 812SB													
	SAFETY INJECTION 24-SI-2-029-151R-2													
697100	TCX-2-2580-H19	F-C	VT-3	1 -		C	-	-	-	-	-		NA	STRUT
	SI-2-029-406-Y32R	NOTE 1												
	R085D802YD													
697400	TCX-2-2580-H3	F-C	VT-3	1 -		C	-	-	-	-	-		NA	STRUT
	SI-2-029-409-S32R	NOTE 1												
	R085D802SB													

SUMMARY NUMBER	EXAMINATION AREA IDENTIFICATION	ASME SEC. XI CATGY ITEM NO	NDE METH	INSPECTION INTERVAL 1	2	PLAN STATUS FIRST PERIOD	SECOND PERIOD 1	2	3	THIRD PERIOD 1	2	PRESERVICE YEAR	INSTRUCTIONS **CALIBRATION BLOCK**
	SAFETY INJECTION 24-SI-2-029-151R-2												
697450	TCX-2-2580-H3 SI-2-029-409-S32R R085D802SB	C-C C3.20	PT	1	-	C	-	-	-	-	-	92	WELDED ATTACHMENT
697700	TCX-2-2580-H1 SI-2-029-415-Y32R R085D802YD	F-C NOTE 1	VT-3	1	-	C	-	-	-	-	-	NA	BOX
697750	TCX-2-2580-H1 SI-2-029-415-Y32R R085D802YD	C-C C3.20	PT	1	-	C	-	-	-	-	-	92	WELDED ATTACHMENT
697800	TCX-2-2580-H2 SI-2-029-424-Y32K R085D802YD	F-C NOTE 1	VT-3	1	-	C	-	-	-	-	-	NA	SNUBBER
697850	TCX-2-2580-H2 SI-2-029-424-Y32K R085D802YD	C-C C3.20	PT	1	-	C	-	-	-	-	-	92	WELDED ATTACHMENT
	SAFETY INJECTION 18-SI-2-030-151R-2												
698400	TCX-2-2579-H7 SI-2-030-401-S32R R070 802SB	F-C NOTE 1	VT-3	1	-	C	-	-	-	-	-	NA	STRUT
698500	TCX-2-2579-H3 SI-2-030-402-S32A R070 802SB	F-C NOTE 1	VT-3	1	-	C	-	-	-	-	-	NA	BOX

SUMMARY NUMBER	EXAMINATION AREA IDENTIFICATION	ASME SEC. XI CATGY ITEM NO	NDE METH	INSPECTION INTERVAL	PLAN STATUS FIRST PERIOD	SECOND PERIOD	THIRD PERIOD	PRESERVICE YEAR	INSTRUCTIONS **CALIBRATION BLOCK**
					1 2	1 2 3	1 2		
	SAFETY INJECTION 18-SI-2-030-151R-2								
698550	TCX-2-2579-H3	C-C	PT	1 -	C	- - -	- -	92	WELDED ATTACHMENT
	SI-2-030-402-S32A	C3.20							
	R070 802SB								
	SAFETY INJECTION 12-SI-2-031-151R-2								
698950	TCX-2-2582-H1	C-C	PT	1 -	-	- - -	X -	92	WELDED ATTACHMENT
	SI-2-031-425-Y32R	C3.20							
	802YD								
699000	TCX-2-2582-H2	F-C	VT-3	1 -	-	- - -	X -	NA	SNUBBER
	SI-2-031-429-S32K	NOTE 1							
	803SB								
699050	TCX-2-2582-H2	C-C	PT	1 -	-	- - -	X -	92	WELDED ATTACHMENT
	SI-2-031-429-S32K	C3.20							
	803SB								
699100	TCX-2-2582-H3	F-C	VT-3	1 -	-	- - -	X -	NA	BOX
	SI-2-031-430-S32A	NOTE 1							
	803SB								
699150	TCX-2-2582-H3	C-C	PT	1 -	-	- - -	X -	92	WELDED ATTACHMENT
	SI-2-031-430-S32A	C3.20							
	803SB								
699200	TCX-2-2582-H24	F-C	VT-3	1 -	-	- - -	X -	NA	STRUT
	SI-2-031-431-S32R	NOTE 1							
	802AB								

SUMMARY NUMBER	EXAMINATION AREA IDENTIFICATION	ASME SEC. XI CATGY ITEM NO	NDE METH	INSPECTION INTERVAL	PLAN STATUS FIRST PERIOD 1	2	SECOND PERIOD 1	2	3	THIRD PERIOD 1	2	PRESERVICE YEAR	INSTRUCTIONS **CALIBRATION BLOCK**
	SAFETY INJECTION 12-SI-2-031-151R-2												
699400	TCX-2-2583-H1	F-C	VT-3	1	-	-	-	-	-	X	-	NA	SNUBBER
	SI-2-031-439-A32K	NOTE 1											
	803AB												
699450	TCX-2-2583-H1	C-C	PT	1	-	-	-	-	-	X	-	92	WELDED ATTACHMENT
	SI-2-031-439-A32K	C3.20											
	803AB												
	SAFETY INJECTION 8-SI-2-032-151R-2												
699600	TCX-2-2579-H2	F-C	VT-3	1	-	C	-	-	-	-	-	NA	STRUT
	SI-2-032-402-S32R	NOTE 1											
	R070 794SB												
699650	TCX-2-2579-H2	C-C	PT	1	-	C	-	-	-	-	-	92	WELDED ATTACHMENT
	SI-2-032-402-S32R	C3.20											
	R070 794SB												
	SAFETY INJECTION 4-SI-2-044-1501R-2												
702500	TCX-2-2562-H4	F-C	VT-3	1	-	-	C	-	-	-	-	NA	SPRING
	SI-2-044-402-S22S	NOTE 1											
	R062 785SB												
703800	TCX-2-2561-H2	F-C	VT-3	1	-	-	C	-	-	-	-	NA	STRUT
	SI-2-044-426-S42R	NOTE 1											
	R077B820SB												

SUMMARY NUMBER	EXAMINATION AREA IDENTIFICATION	ASME SEC. XI CATGY ITEM NO	NDE METH	INSPECTION INTERVAL	PLAN STATUS FIRST PERIOD 1	2	SECOND PERIOD 1	2	3	THIRD PERIOD 1	2	PRESERVICE YEAR	INSTRUCTIONS **CALIBRATION BLOCK**
	SAFETY INJECTION 4-SI-2-044-1501R-2												
703850	TCX-2-2561-H2 SI-2-044-426-S42R R077B820SB	C-C C3.20	PT	1	-	-	C	-	-	-	-	92	WELDED ATTACHMENT
704450	TCX-2-2562-H1 SI-2-044-700-S22R R062E788SB	C-C C3.20	PT	1	-	-	C	-	-	-	-	92	WELDED ATTACHMENT
	SAFETY INJECTION 3-SI-2-050-1501R-2												
706900	TCX-2-2565-H1 SI-2-050-402-S22R R67 788SB	F-C NOTE 1	VT-3	1	C	-	-	-	-	-	-	NA	STRUT
	SAFETY INJECTION 4-SI-2-051-2501R-2												
707500	TCX-2-2560-H3 SI-2-051-408-C42R R154B820RB	F-C NOTE 1	VT-3	1	-	-	C	-	-	-	-	NA	STRUT
707550	TCX-2-2560-H3 SI-2-051-408-C42R R154B820RB	C-C C3.20	PT	1	-	-	C	-	-	-	-	92	WELDED ATTACHMENT
707900	TCX-2-2560-H2 SI-2-051-414-C42R R154B820RB	F-C NOTE 1	VT-3	1	-	-	C	-	-	-	-	NA	STRUT

SUMMARY NUMBER	EXAMINATION AREA IDENTIFICATION	ASME SEC. XI CATGY ITEM NO	NDE METH	INSPECTION INTERVAL 1	2	PLAN STATUS FIRST PERIOD 1	SECOND PERIOD 2	THIRD PERIOD 3	OUTAGE 1	OUTAGE 2	PRESERVICE YEAR	INSTRUCTIONS **CALIBRATION BLOCK**
	SAFETY INJECTION 4-SI-2-051-2501R-2											
707950	TCX-2-2560-H2 SI-2-051-414-C42R R154B820RB	C-C C3.20	PT	1	-	-	C	-	-	-	92	WELDED ATTACHMENT
708000	TCX-2-2560-H1 SI-2-051-415-C42K R154B820RB	F-C NOTE 1	VT-3	1	-	-	C	-	-	-	NA	SNUBBER
708050	TCX-2-2560-H1 SI-2-051-415-C42K R154B820RB	C-C C3.20	PT	1	-	-	C	-	-	-	92	WELDED ATTACHMENT
708500	TCX-2-2560-H4 SI-2-051-421-C42R R154B820RB	F-C NOTE 1	VT-3	1	-	-	C	-	-	-	NA	STRUT
708550	TCX-2-2560-H4 SI-2-051-421-C42R R154B820RB	C-C C3.20	PT	1	-	-	C	-	-	-	92	WELDED ATTACHMENT
	SAFETY INJECTION 14-SI-2-071-601R-2											
710100	TCX-2-2581-H11 SI-2-071-402-S32R 792SB	F-C NOTE 1	VT-3	1	-	-	-	-	-	X	NA	STRUT
710200	TCX-2-2581-H12 SI-2-071-403-S32S 792SB	F-C NOTE 1	VT-3	1	-	-	-	-	-	X	NA	SPRING

SUMMARY NUMBER	EXAMINATION AREA IDENTIFICATION	ASME SEC. XI CATGY ITEM NO	NDE METH	INSPECTION INTERVAL 1	2	PLAN STATUS FIRST PERIOD 1	SECOND PERIOD 2	3	THIRD PERIOD 1	2	PRESERVICE YEAR	INSTRUCTIONS **CALIBRATION BLOCK**
	SAFETY INJECTION 14-SI-2-071-601R-2											
710400	TCX-2-2581-H2	F-C	VT-3	1	-	-	-	-	-	X	NA	SNUBBER
	SI-2-071-405-S32K	NOTE 1										
	791SB											
710450	TCX-2-2581-H2	C-C	PT	1	-	-	-	-	-	X	92	WELDED ATTACHMENT
	SI-2-071-405-S32K	C3.20										
	791SB											
	SAFETY INJECTION 14-SI-2-072-601R-2											
710500	TCX-2-2581-H1	F-C	VT-3	1	-	-	-	-	-	X	NA	BOX
	SI-2-072-401-S32R	NOTE 1										
	792SB											
710550	TCX-2-2581-H1	C-C	PT	1	-	-	-	-	-	X	92	WELDED ATTACHMENT
	SI-2-072-401-S32R	C3.20										
	792SB											
	SAFETY INJECTION 16-SI-2-075-601R-2											
710860	TCX-2-2501-H4	F-C	VT-3	1	C	-	-	-	-	-	NA	SNUBBER
	SI-2-075-401-S22K	NOTE 1										
	R63 790SB											
	SAFETY INJECTION 10-SI-2-082-2501R-2											
713200	TCX-2-2533-H7	F-C	VT-3	1	C	-	-	-	-	-	NA	SNUBBER
	SI-2-082-402-C42K	NOTE 1										
	R154A820RB											

SUMMARY NUMBER	EXAMINATION AREA IDENTIFICATION	ASME SEC. XI CATGY ITEM NO	NDE METH	INSPECTION INTERVAL 1	2	PLAN STATUS FIRST PERIOD	SECOND PERIOD (OUTAGE 1	2	3)	THIRD PERIOD (OUTAGE 1	2)	PRESERVICE YEAR	INSTRUCTIONS **CALIBRATION BLOCK**
	SAFETY INJECTION 8-SI-2-087-2501R-2												
713400	TCX-2-2533-H3 SI-2-087-404-C42R R154A820RB	F-C NOTE 1	VT-3	1	C	-	-	-	-	-	-	NA	STRUT
713450	TCX-2-2533-H3 SI-2-087-404-C42R R154A820RB	C-C C3.20	PT	1	C	-	-	-	-	-	-	92	WELDED ATTACHMENT
713500	TCX-2-2533-H4 SI-2-087-405-C42R R154A820RB	F-C NOTE 1	VT-3	1	C	-	-	-	-	-	-	NA	STRUT
713550	TCX-2-2533-H4 SI-2-087-405-C42R R154A820RB	C-C C3.20	PT	1	C	-	-	-	-	-	-	92	WELDED ATTACHMENT
713800	TCX-2-2533-H5 SI-2-087-409-C42R R154A820RB	F-C NOTE 1	VT-3	1	C	-	-	-	-	-	-	NA	STRUT
713850	TCX-2-2533-H5 SI-2-087-409-C42R R154A820RB	C-C C3.20	PT	1	C	-	-	-	-	-	-	92	WELDED ATTACHMENT
714000	TCX-2-2533-H1 SI-2-087-411-C42K R154A820RB	F-C NOTE 1	VT-3	1	C	-	-	-	-	-	-	NA	SNUBBER

SUMMARY NUMBER	EXAMINATION AREA IDENTIFICATION	ASME SEC. XI CATGY ITEM NO	NDE METH	INSPECTION INTERVAL 1	2	PLAN STATUS FIRST PERIOD 1	SECOND PERIOD 2	THIRD PERIOD 3	OUTAGE 1	OUTAGE 2	PRESERVICE YEAR	INSTRUCTIONS **CALIBRATION BLOCK**
	SAFETY INJECTION 8-SI-2-087-2501R-2											
714050	TCX-2-2533-H1 SI-2-087-411-C42K R154A820RB	C-C C3.20	PT	1	C	-	-	-	-	-	92	WELDED ATTACHMENT
714100	TCX-2-2533-H2 SI-2-087-412-C42K R154A820RB	F-C NOTE 1	VT-3	1	C	-	-	-	-	-	NA	SNUBBER
714150	TCX-2-2533-H2 SI-2-087-412-C42K R154A820RB	C-C C3.20	PT	1	C	-	-	-	-	-	92	WELDED ATTACHMENT
714500	TCX-2-2533-H6 SI-2-087-416-C42K R154A820RB	F-C NOTE 1	VT-3	1	C	-	-	-	-	-	NA	SNUBBER
714550	TCX-2-2533-H6 SI-2-087-416-C42K R154A820RB	C-C C3.20	PT	1	C	-	-	-	-	-	92	WELDED ATTACHMENT
	SAFETY INJECTION 8-SI-2-088-2501R-2											
715200	TCX-2-2534-H1 SI-2-088-409-C42K R154D817RB	F-C NOTE 1	VT-3	1	-	C	-	-	-	-	NA	SNUBBER
715250	TCX-2-2534-H1 SI-2-088-409-C42K R154D817RB	C-C C3.20	PT	1	-	C	-	-	-	-	92	WELDED ATTACHMENT

SUMMARY NUMBER	EXAMINATION AREA IDENTIFICATION	ASME SEC. XI CATGY ITEM NO	NDE METH	INSPECTION INTERVAL 1	2	PLAN STATUS FIRST PERIOD 1	SECOND PERIOD 2	3	THIRD PERIOD 1	2	PRESERVICE YEAR	INSTRUCTIONS **CALIBRATION BLOCK**
	SAFETY INJECTION 8-SI-2-088-2501R-2											
715300	TCX-2-2534-H2	F-C	VT-3	1 -	C	-	-	-	-	-	NA	SNUBBER
	SI-2-088-410-C42K	NOTE 1										
	R154D817RB											
715350	TCX-2-2534-H2	C-C	PT	1 -	C	-	-	-	-	-	92	WELDED ATTACHMENT
	SI-2-088-410-C42K	C3.20										
	R154D817RB											
	SAFETY INJECTION 10-SI-2-095-2501R-2											
716500	TCX-2-2530-H1	F-C	VT-3	1 C	-	-	-	-	-	-	NA	STRUT
	SI-2-095-403-S42R	NOTE 1										
	R77N 823SB											
716550	TCX-2-2530-H1	C-C	PT	1 C	-	-	-	-	-	-	92	WELDED ATTACHMENT
	SI-2-095-403-S42R	C3.20										
	R77N 823SB											
717100	TCX-2-2535-H2	F-C	VT-3	1 -	-	-	-	-	X	-	NA	STRUT
	SI-2-095-409-C42R	NOTE 1										
	823RB											
717150	TCX-2-2535-H2	C-C	PT	1 -	-	-	-	-	X	-	92	WELDED ATTACHMENT
	SI-2-095-409-C42R	C3.20										
	823RB											
717500	TCX-2-2535-H1	F-C	VT-3	1 -	-	-	-	-	X	-	NA	STRUT
	SI-2-095-415-C42R	NOTE 1										
	823RB											

SUMMARY NUMBER	EXAMINATION AREA IDENTIFICATION	ASME SEC. XI CATGY ITEM NO	NDE METH	INSPECTION INTERVAL	PLAN STATUS FIRST PERIOD 1	2	SECOND PERIOD 1	2	3	THIRD PERIOD 1	2	PRESERVICE YEAR	INSTRUCTIONS **CALIBRATION BLOCK**
					OUTAGE								
	SAFETY INJECTION 10-SI-2-095-2501R-2												
717550	TCX-2-2535-H1	C-C	PT	1	-	-	-	-	-	X	-	92	WELDED ATTACHMENT
	SI-2-095-415-C42R	C3.20											
	823RB												
	SAFETY INJECTION 6-SI-2-171-2501R-2												
717700	TCX-2-2535-H3	F-C	VT-3	1	-	-	-	-	-	X	-	NA	STRUT
	SI-2-171-401-C42R	NOTE 1											
	823RB												
717750	TCX-2-2535-H3	C-C	PT	1	-	-	-	-	-	X	-	92	WELDED ATTACHMENT
	SI-2-171-401-C42R	C3.20											
	823RB												
	SAFETY INJECTION 4-SI-2-300-1501R-2												
718100	TCX-2-2561-H1	F-C	VT-3	1	-	-	C	-	-	-	-	NA	BOX
	SI-2-300-404-S22A	NOTE 1											
	R067 789SB												
718150	TCX-2-2561-H1	C-C	PT	1	-	-	C	-	-	-	-	92	WELDED ATTACHMENT
	SI-2-300-404-S22A	C3.20											
	R067 789SB												
	SAFETY INJECTION 4-SI-2-306-2501R-2												
718200	TCX-2-2566-H18	F-C	VT-3	1	C	-	-	-	-	-	-	NA	STRUT
	SI-2-306-401-C42R	NOTE 1											
	R154B817RB												

SUMMARY NUMBER	EXAMINATION AREA IDENTIFICATION	ASME SEC. XI CATGY ITEM NO	NDE METH	INSPECTION INTERVAL 1	2	PLAN STATUS FIRST PERIOD 1	SECOND PERIOD 2	THIRD PERIOD 3	1	2	PRESERVICE YEAR	INSTRUCTIONS **CALIBRATION BLOCK**
	SAFETY INJECTION 4-SI-2-306-2501R-2											
718300	TCX-2-2566-H11 SI-2-306-402-C42R R154B817RB	F-C NOTE 1	VT-3	1 C	-	-	-	-	-	-	NA	STRUT
718400	TCX-2-2566-H8 SI-2-306-403-C42R R154B817RB	F-C NOTE 1	VT-3	1 C	-	-	-	-	-	-	NA	STRUT
718500	TCX-2-2566-H1 SI-2-306-404-C42R R154B823RB	F-C NOTE 1	VT-3	1 C	-	-	-	-	-	-	NA	STRUT
718550	TCX-2-2566-H1 SI-2-306-404-C42R R154B823RB	C-C C3.20	PT	1 C	-	-	-	-	-	-	92	WELDED ATTACHMENT
718600	TCX-2-2566-H9 SI-2-306-405-C42R R154B817RB	F-C NOTE 1	VT-3	1 C	-	-	-	-	-	-	NA	STRUT
718700	TCX-2-2566-H12 SI-2-306-406-C42R R154B817RB	F-C NOTE 1	VT-3	1 C	-	-	-	-	-	-	NA	STRUT
718800	TCX-2-2566-H16 SI-2-306-407-C42R R154B817RB	F-C NOTE 1	VT-3	1 C	-	-	-	-	-	-	NA	STRUT

SUMMARY NUMBER	EXAMINATION AREA IDENTIFICATION	ASME SEC. XI CATGY ITEM NO	NDE METH	INSPECTION INTERVAL 1	2	PLAN STATUS FIRST PERIOD 1	SECOND PERIOD 2	3	THIRD PERIOD 1	2	PRESERVICE YEAR	INSTRUCTIONS **CALIBRATION BLOCK**
	SAFETY INJECTION 4-SI-2-306-2501R-2											
718900	TCX-2-2566-H20	F-C	VT-3	1	C	-	-	-	-	-	NA	STRUT
	SI-2-306-408-C42R	NOTE 1										
	R154B817RB											
719000	TCX-2-2566-H24	F-C	VT-3	1	C	-	-	-	-	-	NA	STRUT
	SI-2-306-410-C42R	NOTE 1										
	R154B817RB											
719400	TCX-2-2566-H6	F-C	VT-3	1	C	-	-	-	-	-	NA	SNUBBER
	SI-2-306-414-C42K	NOTE 1										
	R154B818RB											
719600	TCX-2-2566-H2	F-C	VT-3	1	C	-	-	-	-	-	NA	STRUT
	SI-2-306-416-C42R	NOTE 1										
	R154B817RB											
719650	TCX-2-2566-H2	C-C	PT	1	C	-	-	-	-	-	92	WELDED ATTACHMENT
	SI-2-306-416-C42R	C3.20										
	R154B817RB											
719900	TCX-2-2566-H3	F-C	VT-3	1	C	-	-	-	-	-	NA	STRUT
	SI-2-306-420-C42R	NOTE 1										
	R154B817RB											
719950	TCX-2-2566-H3	C-C	PT	1	C	-	-	-	-	-	92	WELDED ATTACHMENT
	SI-2-306-420-C42R	C3.20										
	R154B817RB											

SUMMARY NUMBER	EXAMINATION AREA IDENTIFICATION	ASME SEC. XI CATGY ITEM NO	NDE METH	INSPECTION INTERVAL 1	PLAN STATUS FIRST PERIOD 2	OUTAGE 1	SECOND PERIOD 2	OUTAGE 3	THIRD PERIOD 1	OUTAGE	THIRD PERIOD 2	PRESERVICE YEAR	INSTRUCTIONS **CALIBRATION BLOCK**
	SAFETY INJECTION 16-SI-2-325-601R-2												
721200	TCX-2-2501-H3	F-C	VT-3	1	C	-	-	-	-	-	-	NA	STRUT
	SI-2-325-700-S32R	NOTE 1											
	R63 803SB												
	SAFETY INJECTION 16-SI-2-326-2501R-2												
721210	TCX-2-2500-H2	F-C	VT-3	1	-	-	-	-	-	-	X	NA	STRUT
	SI-2-326-401-S32R	NOTE 1											
	798SB												
	SAFETY INJECTION 3-SI-2-336-1501R-2												
721300	TCX-2-2563-H10	F-C	VT-3	1	-	-	C	-	-	-	-	NA	SNUBBER
	SI-2-336-403-S22K	NOTE 1											
	R066 789SB												
	SAFETY INJECTION 16-SI-2-914-151R-2												
721700	TCX-2-2579-H4	F-C	VT-3	1	-	C	-	-	-	-	-	NA	BOX
	SI-2-914-402-S32A	NOTE 1											
	R075 802SB												
721750	TCX-2-2579-H4	C-C	PT	1	-	C	-	-	-	-	-	92	WELDED ATTACHMENT
	SI-2-914-402-S32A	C3.20											
	R075 802SB												
	SAFETY INJECTION 2-SI-2-066-2501R-2												
721900	TCX-2-2566-H41	F-C	VT-3	1	C	-	-	-	-	-	-	NA	SNUBBER
	SI-2-RB-010A-702-2	NOTE 1											
	R154B815RB												

SUMMARY NUMBER	EXAMINATION AREA IDENTIFICATION	ASME SEC. XI CATGY ITEM NO	NDE METH	INSPECTION INTERVAL 1	2	PLAN STATUS FIRST PERIOD	SECOND PERIOD 1	2	3	THIRD PERIOD 1	2	PRESERVICE YEAR	INSTRUCTIONS **CALIBRATION BLOCK**
	SAFETY INJECTION 2-SI-2-066-2501R-2												
722100	TCX-2-2566-H43	F-C	VT-3	1	C	-	-	-	-	-	-	NA	STRUT
	SI-2-RB-010A-704-2	NOTE 1											
	R154B815RB												
	SAFETY INJECTION 2-SI-2-064-2501R-2												
722200	TCX-2-2566-H44	F-C	VT-3	1	C	-	-	-	-	-	-	NA	SNUBBER
	SI-2-RB-010B-701-2	NOTE 1											
	R154B813RB												
722300	TCX-2-2566-H45	F-C	VT-3	1	C	-	-	-	-	-	-	NA	SNUBBER
	SI-2-RB-010B-703-2	NOTE 1											
	R154B812RB												
	SAFETY INJECTION 2-SI-2-068-2501R-2												
725300	TCX-2-2566A-H10	F-C	VT-3	1	C	-	-	-	-	-	-	NA	U-BOLT
	SI-2-RB-058-704-2	NOTE 1											
	R154D821RB												
	FEEDWATER 18-FW-2-036-2003-2												
750000	TCX-2-2101-MR1	F-B	VT-3	1	C	-	-	-	-	-	-	NA	MOMENT RESTRAINT DWG S2-0681
	CP2-FWSSMR-01	NOTE 1											
	R100A856SB												
	MAIN STEAM 32-MS-2-001-1303-2												
750400	TCX-2-2100-MR1	F-B	VT-3	1	C	-	-	-	-	-	-	NA	MOMENT RESTRAINT DWG S2-0684
	CP2-MSMEMR-01	NOTE 1											
	R108 877SB												

SUMMARY NUMBER	EXAMINATION AREA IDENTIFICATION	ASME SEC. XI CATGY ITEM NO	NDE METH	INSPECTION INTERVAL 1	2	PLAN STATUS FIRST PERIOD	SECOND PERIOD 1	2	3	THIRD PERIOD 1	2	PRESERVICE YEAR	INSTRUCTIONS **CALIBRATION BLOCK**
	RESIDUAL HEAT REMOVAL TCX-RHAHRS-01												
750800	TCX-2-1120-1S1 RHR HX 01 TOP SUPPORTS R69 828SB	F-B NOTE 1	VT-3	1	-	-	-	-	-	-	X	NA	DWG 2323-S2-0654
750900	TCX-2-1120-1S2 RHR HX 01 INTERMEDIATE SUPPORTS R69 810SB	F-B NOTE 1	VT-3	1	-	-	-	-	-	-	X	NA	DWG 2323-S2-0654
751000	TCX-2-1120-1S3 RHR HX 01 FOUNDATION SUPPORTS R69 795SB	F-B NOTE 1	VT-3	1	-	-	-	-	-	-	X	NA	DWG 2323-S2-0654
	RESIDUAL HEAT REMOVAL TCX-RHAPRH-01												
751400	TCX-2-3100-1S1 RHR PUMP 01 SUPPORT R53 773SB	F-B NOTE 1	VT-3	1	-	-	-	-	-	-	X	NA	FEET. DWG C-8X20WDF86X16D
	SAFETY INJECTION TCX-SIAPSI-02												
751700	TCX-2-3140-1S1 SI PUMP 02 SUPPORT R060 773SB	F-B NOTE 1	VT-3	1	-	-	C	-	-	-	-	NA	FEET. DWG 300-J49738
	CHEMICAL & VOLUME CONTROL TCX-CSAPCH-01												
751800	TCX-2-3110-1S1 CENTRIFUGAL CHARGING PUMP 01 R195 810AB	F-B NOTE 1	VT-3	1	-	-	-	-	-	X	-	NA	SUPPORT CRADLE. DWG B49745

SUMMARY NUMBER	EXAMINATION AREA IDENTIFICATION	ASME SEC. XI CATGY ITEM NO	NDE METH	INSPECTION INTERVAL 1	2	PLAN STATUS FIRST PERIOD 1	SECOND PERIOD 2	3	THIRD PERIOD 1	2	PRESERVICE YEAR	INSTRUCTIONS **CALIBRATION BLOCK**
	CONTAINMENT SPRAY CP2-CTAHCS-01											
752000	TCX-2-1180-1S1 CT HX 01 TOP SUPPORTS R69 828SB	F-B NOTE 1	VT-3	1 -	-	-	-	C	-	-	NA	DWG. 2323-S2-0654
752100	TCX-2-1180-1S2 CT HX 01 INTERMEDIATE SUPPORTS R69 810SB	F-B NOTE 1	VT-3	1 -	-	-	-	C	-	-	NA	DWG. 2323-S2-0654
752200	TCX-2-1180-1S3 CT HX 01 FOUNDATION SUPPORTS R69 795SB	F-B NOTE 1	VT-3	1 -	-	-	-	C	-	-	NA	DWG. 2323-S2-0654
	CONTAINMENT SPRAY CP2-CTAPCS-02											
752700	TCX-2-2578-2PS1 CT PUMP 02 SUPPORT R51 773SB	F-B NOTE 1	VT-3	1 -	-	-	-	C	-	-	NA	SUPPORT CRADLE. DWG 15210085/88
	CHEMICAL & VOLUME CONTROL TCX-CSAHRG-01											
753000	TCX-2-1150-1S1 REGENERATIVE HX 01 SUPPORT R155C833RB	F-B NOTE 1	VT-3	1 -	-	C	-	-	-	-	NA	DWG D-4314-4

SUMMARY NUMBER	EXAMINATION AREA IDENTIFICATION	ASME SEC. XI CATGY ITEM NO	NDE METH	INSPECTION INTERVAL 1	2	PLAN STATUS FIRST PERIOD	SECOND PERIOD	THIRD PERIOD	OUTAGE 1	2	3	1	2	PRESERVICE YEAR	INSTRUCTIONS **CALIBRATION BLOCK**
	AUXILIARY FEEDWATER														
810500	AF-2-SB-001-H6 AF-2-001-428-S33R 2-074	F-C NOTE 1	VT-3	1	C	-	-	-	-	-	-	-	-	NA	STRUT
810550	AF-2-SB-001-H6 AF-2-001-428-S33R 2-074	D-A D1.20	VT-3	1	C	-	-	-	-	-	-	-	-	NA	WELDED ATTACHMENT
810700	AF-2-SB-001-H8 AF-2-059-401-S33R 2-074	F-C NOTE 1	VT-3	1	C	-	-	-	-	-	-	-	-	NA	STRUT
811800	AF-2-SB-002-H9 AF-2-002-439-S33R	F-C NOTE 1	VT-3	1	C	-	-	-	-	-	-	-	-	NA	STRUT
811850	AF-2-SB-002-H9 AF-2-002-439-S33R	D-A D1.20	VT-3	1	C	-	-	-	-	-	-	-	-	NA	WELDED ATTACHMENT
811900	AF-2-SB-003-H1 AF-2-035-402-S33R 2-073	F-C NOTE 1	VT-3	1	-	-	-	-	-	-	-	X	-	NA	STRUT
812250	AF-2-SB-003-H4 AF-2-035-428-S33R 2-070	D-A D1.20	VT-3	1	-	-	-	-	-	-	-	X	-	NA	WELDED ATTACHMENT

INSERVICE INSPECTION PLAN

CLASS 3 SCHED/COMPL COMPONENTS

SUMMARY NUMBER	EXAMINATION AREA IDENTIFICATION	ASME SEC. XI CATGY ITEM NO	NDE METH	INSPECTION INTERVAL 1	2	PLAN STATUS FIRST PERIOD 1	2	SECOND PERIOD 1	2	3	THIRD PERIOD 1	2	PRESERVICE YEAR	INSTRUCTIONS **CALIBRATION BLOCK**
	AUXILIARY FEEDWATER													
812400	AF-2-SB-003-H6 AF-2-035-700-S33A 2-074	F-C NOTE 1	VT-3	1	-	-	-	-	-	X	-		NA	BOX
812450	AF-2-SB-003-H6 AF-2-035-700-S33A 2-074	D-A D1.20	VT-3	1	-	-	-	-	-	X	-		NA	WELDED ATTACHMENT
812460	AF-2-SB-003-H7 AF-2-035-424-S33A R074 808SB	F-C NOTE 1	VT-3	1	-	-	-	-	-	X	-		NA	BOX
812470	AF-2-SB-003-H7 AF-2-035-424-S33A R074 808SB	D-A D1.20	VT-3	1	-	-	-	-	-	X	-		NA	WELDED ATTACHMENT
812500	AF-2-SB-004-H1 AF-2-003-402-S33R 2-072	F-C NOTE 1	VT-3	1	-	-	-	-	-	X	-		NA	STRUT
812600	AF-2-SB-004-H2 AF-2-003-404-S33R 2-071	F-C NOTE 1	VT-3	1	-	-	-	-	-	X	-		NA	STRUT
812700	AF-2-SB-004-H3 AF-2-003-407-S33A 2-072	F-C NOTE 1	VT-3	1	-	-	-	-	-	X	-		NA	FRAME

SUMMARY NUMBER	EXAMINATION AREA IDENTIFICATION	ASME SEC. XI CATGY ITEM NO	NDE METH	INSPECTION INTERVAL	PLAN STATUS FIRST PERIOD 1	FIRST PERIOD 2	SECOND PERIOD 1	SECOND PERIOD 2	SECOND PERIOD 3	THIRD PERIOD 1	THIRD PERIOD 2	PRESERVICE YEAR	INSTRUCTIONS **CALIBRATION BLOCK**
	AUXILIARY FEEDWATER												
812750	AF-2-SB-004-H3 AF-2-003-407-S33A 2-072	D-A D1.20	VT-3	1	-	-	-	-	-	X	-	NA	WELDED ATTACHMENT
812800	AF-2-SB-004-H4 AF-2-058-407-S33R 2-072	F-C NOTE 1	VT-3	1	-	-	-	-	-	X	-	NA	STRUT
812900	AF-2-SB-005-H1 AF-2-003-405-S33R 2-071	F-C NOTE 1	VT-3	1	-	-	-	-	-	X	-	NA	STRUT
813000	AF-2-SB-005-H2 AF-2-003-406-S33R 2-071	F-C NOTE 1	VT-3	1	-	-	-	-	-	X	-	NA	STRUT
814000	AF-2-SB-006-H4 AF-2-004-405-S33A 2-073	F-C NOTE 1	VT-3	1	C	-	-	-	-	-	-	NA	BOX
814050	AF-2-SB-006-H4 AF-2-004-405-S33A 2-073	D-A D1.20	VT-3	1	C	-	-	-	-	-	-	NA	WELDED ATTACHMENT
814800	AF-2-SB-010-H2 AF-2-006-412-S33A 2-074	F-C NOTE 1	VT-3	1	C	-	-	-	-	-	-	NA	BOX

SUMMARY NUMBER	EXAMINATION AREA IDENTIFICATION	ASME SEC. XI CATGY ITEM NO	NDE METH	INSPECTION INTERVAL 1	2	PLAN STATUS FIRST PERIOD 1	SECOND PERIOD 2	3	THIRD PERIOD 1	2	PRESERVICE YEAR	INSTRUCTIONS **CALIBRATION BLOCK**
	AUXILIARY FEEDWATER											
814850	AF-2-SB-010-H2 AF-2-006-412-S33A 2-074	D-A D1.20	VT-3	1	C	-	-	-	-	-	NA	WELDED ATTACHMENT
815000	AF-2-SB-011-H2 AF-2-005-700-S33A 2-070	F-C NOTE 1	VT-3	1	C	-	-	-	-	-	NA	BOX
815050	AF-2-SB-011-H2 AF-2-005-700-S33A 2-070	D-A D1.20	VT-3	1	C	-	-	-	-	-	NA	WELDED ATTACHMENT
815100	AF-2-SB-011-H3 AF-2-084-401-S33A 2-070	F-C NOTE 1	VT-3	1	C	-	-	-	-	-	NA	BOX
815150	AF-2-SB-011-H3 AF-2-084-401-S33A 2-070	D-A D1.20	VT-3	1	C	-	-	-	-	-	NA	WELDED ATTACHMENT
815500	AF-2-SB-012-H4 AF-2-010-403-S33A 2-072	F-C NOTE 1	VT-3	1	C	-	-	-	-	-	NA	BOX
815550	AF-2-SB-012-H4 AF-2-010-403-S33A 2-072	D-A D1.20	VT-3	1	C	-	-	-	-	-	NA	WELDED ATTACHMENT

SUMMARY NUMBER	EXAMINATION AREA IDENTIFICATION	ASME SEC. XI CATGY ITEM NO	NDE METH	INSPECTION INTERVAL 1	2	PLAN STATUS FIRST PERIOD	SECOND PERIOD 1	2	3	THIRD PERIOD 1	2	PRESERVICE YEAR	INSTRUCTIONS **CALIBRATION BLOCK**
	AUXILIARY FEEDWATER												
816600	AF-2-SB-013-H7 AF-2-009-413-S33A 2-073	F-C NOTE 1	VT-3	1	C	-	-	-	-	-	-	NA	BOX
816650	AF-2-SB-013-H7 AF-2-009-413-S33A 2-073	D-A D1.20	VT-3	1	C	-	-	-	-	-	-	NA	WELDED ATTACHMENT
816800	AF-2-SB-014-H1 AF-2-061-401-S33A 2-072	F-C NOTE 1	VT-3	1	C	-	-	-	-	-	-	NA	BOX
816850	AF-2-SB-014-H1 AF-2-061-401-S33A 2-072	D-A D1.20	VT-3	1	C	-	-	-	-	-	-	NA	WELDED ATTACHMENT
817100	AF-2-SB-014-H4 AF-2-099-401-S33R 2-072	F-C NOTE 1	VT-3	1	C	-	-	-	-	-	-	NA	STRUT
818600	AF-2-SB-017-H1 AF-2-028-402-S33R 2-072	F-C NOTE 1	VT-3	1	C	-	-	-	-	-	-	NA	STRUT
819000	AF-2-SB-017-H5 AF-2-039-401-S33R 2-072	F-C NOTE 1	VT-3	1	C	-	-	-	-	-	-	NA	STRUT

SUMMARY NUMBER	EXAMINATION AREA IDENTIFICATION	ASME SEC. XI CATGY ITEM NO	NDE METH	INSPECTION INTERVAL 1	2	PLAN STATUS FIRST PERIOD 1	SECOND PERIOD 2	3	THIRD PERIOD 1	2	PRESERVICE YEAR	INSTRUCTIONS **CALIBRATION BLOCK**
						OUTAGE						
	AUXILIARY FEEDWATER											
819500	AF-2-SB-019-H1	F-C	VT-3	1	C	-	-	-	-	-	NA	STRUT
	AF-2-050-401-S33R	NOTE 1										
	2-072											
820000	AF-2-SB-019-H6	F-C	VT-3	1	C	-	-	-	-	-	NA	STRUT
	AF-2-097-402-S33R	NOTE 1										
	2-071											
820100	AF-2-SB-019-H7	F-C	VT-3	1	C	-	-	-	-	-	NA	STRUT
	AF-2-097-403-S33R	NOTE 1										
	2-071											
820200	AF-2-SB-019-H8	F-C	VT-3	1	C	-	-	-	-	-	NA	STRUT
	AF-2-097-406-S33R	NOTE 1										
	2-071											
820250	AF-2-SB-019-H8	D-A	VT-3	1	C	-	-	-	-	-	NA	WELDED ATTACHMENT
	AF-2-097-406-S33R	D1.20										
	2-071											
820400	AF-2-SB-020-H2	F-C	VT-3	1	-	-	C	-	-	-	NA	STRUT
	AF-2-099-408-S33R	NOTE 1										
	R071 807SB											
820700	AF-2-SB-020-H5	F-C	VT-3	1	-	-	C	-	-	-	NA	STRUT
	AF-2-099-411-S33R	NOTE 1										
	R071 807SB											

SUMMARY NUMBER	EXAMINATION AREA IDENTIFICATION	ASME SEC. XI CATGY ITEM NO	NDE METH	INSPECTION INTERVAL FIRST PERIOD 1	2	PLAN STATUS SECOND PERIOD 1	2	3	THIRD PERIOD 1	2	PRESERVICE YEAR	INSTRUCTIONS **CALIBRATION BLOCK**
	AUXILIARY FEEDWATER											
820800	AF-2-SB-020-H6	F-C	VT-3	1 -	-	C	-	-	-	-	NA	STRUT
	AF-2-099-412-S33R	NOTE 1										
	R071 807SB											
820900	AF-2-SB-020-H7	F-C	VT-3	1 -	-	-	-	C	-	-	NA	STRUT
	AF-2-099-413-S33R	NOTE 1										
	R082 807SB											
821800	AF-2-SB-021-H3	F-C	VT-3	1 -	-	C	-	-	-	-	NA	STRUT
	AF-2-097-410-S33R	NOTE 1										
	R082 807SB											
821850	AF-2-SB-021-H3	D-A	VT-3	1 -	-	C	-	-	-	-	NA	WELDED ATTACHMENT
	AF-2-097-410-S33R	D1.20										
	R071 807SB											
822700	AF-2-SB-021-H12	F-C	VT-3	1 -	-	-	-	C	-	-	NA	BOX
	AF-2-097-423-S33A	NOTE 1										
	R082 807SB											
822750	AF-2-SB-021-H12	D-A	VT-3	1 -	-	-	-	C	-	-	NA	WELDED ATTACHMENT
	AF-2-097-423-S33A	D1.20										
	R082 807SB											
825750	AF-2-SB-027-H6	D-A	VT-3	1 -	-	C	-	-	-	-	NA	WELDED ATTACHMENT
	AF-2-030-403-S33R	D1.20										
	R073 794SB											

SUMMARY NUMBER	EXAMINATION AREA IDENTIFICATION	ASME SEC. XI CATGY ITEM NO	NDE METH	INSPECTION INTERVAL 1	2	PLAN STATUS FIRST PERIOD 1	SECOND PERIOD 2	3	THIRD PERIOD 1	2	PRESERVICE YEAR	INSTRUCTIONS **CALIBRATION BLOCK**
	OUTAGE											
	AUXILIARY FEEDWATER											
826150	AF-2-SB-028-H1	D-A	VT-3	1	-	C	-	-	-	-	NA	WELDED ATTACHMENT
	AF-2-011-401-S33R	D1.20										
	R074 805SB											
827600	AF-2-SB-030A-H1	F-C	VT-3	1	-	C	-	-	-	-	NA	SPRING
	AF-2-025-401-S33S	NOTE 1										
	R074 793SB											
829400	AF-2-SB-032-H2	F-C	VT-3	1	-	C	-	-	-	-	NA	U-BOLT
	AF-2-101-402-S33R	NOTE 1										
	R073 792SB											
829500	AF-2-SB-032-H3	F-C	VT-3	1	-	C	-	-	-	-	NA	BOX
	AF-2-101-431-S33A	NOTE 1										
	R073 792SB											
829550	AF-2-SB-032-H3	D-A	VT-3	1	-	C	-	-	-	-	NA	WELDED ATTACHMENT
	AF-2-101-431-S33A	D1.20										
	R073 792SB											
836500	AF-2-SB-042-H11	F-C	VT-3	1	-	-	-	C	-	-	NA	BOX
	AF-2-100-407-S33A	NOTE 1										
	R082 809SB											
836550	AF-2-SB-042-H11	D-A	VT-3	1	-	-	-	C	-	-	NA	WELDED ATTACHMENT
	AF-2-100-407-S33A	D1.20										
	R082 809SB											

SUMMARY NUMBER	EXAMINATION AREA IDENTIFICATION	ASME SEC. XI CATGY ITEM NO	NDE METH	INSPECTION INTERVAL 1	2	PLAN STATUS FIRST PERIOD OUTAGE 1	SECOND PERIOD OUTAGE 2	3	THIRD PERIOD OUTAGE 1	2	PRESERVICE YEAR	INSTRUCTIONS **CALIBRATION BLOCK**
	AUXILIARY FEEDWATER											
837500	AF-2-SB-044-H1 AF-2-102-405-S33A 2-074	F-C NOTE 1	VT-3	1	-	-	-	-	X	-	NA	BOX
837550	AF-2-SB-044-H1 AF-2-102-405-S33A 2-074	D-A D1.20	VT-3	1	-	-	-	-	X	-	NA	WELDED ATTACHMENT
838600	AF-2-SB-044-H12 AF-2-102-416-S33K 2-082	F-C NOTE 1	VT-3	1	-	-	-	-	X	-	NA	SNUBBER
839000	AF-2-SB-045-H1 AF-2-096-405-S33A 2-074	F-C NOTE 1	VT-3	1	-	-	-	-	X	-	NA	BOX
839050	AF-2-SB-045-H1 AF-2-096-405-S33A 2-074	D-A D1.20	VT-3	1	-	-	-	-	X	-	NA	WELDED ATTACHMENT
839600	AF-2-SB-045-H7 AF-2-096-413-S33R 2-082	F-C NOTE 1	VT-3	1	-	-	-	-	X	-	NA	STRUT
839650	AF-2-SB-045-H7 AF-2-096-413-S33R 2-082	D-A D1.20	VT-3	1	-	-	-	-	X	-	NA	WELDED ATTACHMENT

SUMMARY NUMBER	EXAMINATION AREA IDENTIFICATION	ASME SEC. XI CATGY ITEM NO	NDE METH	INSPECTION INTERVAL 1	2	PLAN STATUS FIRST PERIOD 1	SECOND PERIOD 2	3	THIRD PERIOD 1	2	PRESERVICE YEAR	INSTRUCTIONS **CALIBRATION BLOCK**
	AUXILIARY FEEDWATER											
841000	AF-2-SB-046-H6	F-C	VT-3	1	-	-	-	-	X	-	NA	BOX
	AF-2-098-412-S33A	NOTE 1										
	2-082											
841050	AF-2-SB-046-H6	D-A	VT-3	1	-	-	-	-	X	-	NA	WELDED ATTACHMENT
	AF-2-098-412-S33A	D1.20										
	2-082											
841500	AF-2-SB-047-H3	F-C	VT-3	1	-	-	-	-	X	-	NA	STRUT
	AF-2-096-439-S43R	NOTE 1										
	2-078											
841550	AF-2-SB-047-H3	D-A	VT-3	1	-	-	-	-	X	-	NA	WELDED ATTACHMENT
	AF-2-096-439-S43R	D1.20										
	2-078											
845800	AF-2-SB-055A-H3	F-C	VT-3	1	-	-	-	-	X	-	NA	STRUT
	AF-2-097-433-S53R	NOTE 1										
	2-094											
845850	AF-2-SB-055A-H3	D-A	VT-3	1	-	-	-	-	X	-	NA	WELDED ATTACHMENT
	AF-2-097-433-S53R	D1.20										
	2-094											
849200	AF-2-SB-063A-H1	F-C	VT-3	1	-	-	-	-	X	-	NA	STRUT
	AF-2-103-411-S53R	NOTE 1										
	2-089											

SUMMARY NUMBER	EXAMINATION AREA IDENTIFICATION	ASME SEC. XI CATGY ITEM NO	NDE METH	INSPECTION INTERVAL 1	2	PLAN STATUS FIRST PERIOD	SECOND PERIOD (OUTAGE 1)	(OUTAGE 2)	(OUTAGE 3)	THIRD PERIOD (OUTAGE 1)	(OUTAGE 2)	PRESERVICE YEAR	INSTRUCTIONS **CALIBRATION BLOCK**
	AUXILIARY FEEDWATER												
849250	AF-2-SB-063A-H1 AF-2-103-411-S53R 2-089	D-A D1.20	VT-3	1	-	-	-	-	-	X	-	NA	WELDED ATTACHMENT
849700	AF-2-SB-063A-H6 AF-2-111-401-S63R 2-100A	F-C NOTE 1	VT-3	1	-	-	-	-	-	X	-	NA	BOX
849750	AF-2-SB-063A-H6 AF-2-111-401-S63R 2-100A	D-A D1.20	VT-3	1	-	-	-	-	-	X	-	NA	WELDED ATTACHMENT
850900	AF-2-YD-001-H10 AF-2-001-421-Y33R 2-085D	F-C NOTE 1	VT-3	1	-	-	-	-	-	X	-	NA	STRUT
850950	AF-2-YD-001-H10 AF-2-001-421-Y33R 2-085D	D-A D1.20	VT-3	1	-	-	-	-	-	X	-	NA	WELDED ATTACHMENT
851450	AF-2-YD-001-H15 AF-2-006-402-S33R 2-074	D-A D1.20	VT-3	1	-	-	-	-	-	X	-	NA	WELDED ATTACHMENT
851650	AF-2-YD-001-H17 AF-2-006-405-S33R 2-074	D-A D1.20	VT-3	1	-	-	-	-	-	X	-	NA	WELDED ATTACHMENT

SUMMARY NUMBER	EXAMINATION AREA IDENTIFICATION	ASME SEC. XI CATGY ITEM NO	NDE METH	INSPECTION INTERVAL	PLAN STATUS FIRST PERIOD 1	FIRST PERIOD 2	SECOND PERIOD 1	SECOND PERIOD 2	SECOND PERIOD 3	THIRD PERIOD 1	THIRD PERIOD 2	PRESERVICE YEAR	INSTRUCTIONS **CALIBRATION BLOCK**
	AUXILIARY FEEDWATER												
852200	AF-2-YD-002-H5 AF-2-002-418-Y33R 2-085D	F-C NOTE 1	VT-3	1	-	-	-	-	-	X	-	NA	STRUT
852250	AF-2-YD-002-H5 AF-2-002-418-Y33R 2-085D	D-A D1.20	VT-3	1	-	-	-	-	-	X	-	NA	WELDED ATTACHMENT
855000	AF-2-YD-006-H3 AF-2-043-403-Y43R 2-085D	F-C NOTE 1	VT-3	1	-	-	-	-	-	X	-	NA	STRUT
	COMPONENT COOLING												
856600	CC-2-AB-001-H5 CC-2-019-706-A43R X-204	F-C NOTE 1	VT-3	1	C	-	-	-	-	-	-	NA	STRUT
856650	CC-2-AB-001-H5 CC-2-019-706-A43R X-204	D-A D1.20	VT-3	1	C	-	-	-	-	-	-	NA	WELDED ATTACHMENT
856700	CC-2-AB-001-H6 CC-2-019-707-A43S	F-C NOTE 1	VT-3	1	C	-	-	-	-	-	-	NA	SPRING
856750	CC-2-AB-001-H6 CC-2-019-707-A43S	D-A D1.20	VT-3	1	C	-	-	-	-	-	-	NA	WELDED ATTACHMENT

SUMMARY NUMBER	EXAMINATION AREA IDENTIFICATION	ASME SEC. XI CATGY ITEM NO	NDE METH	INSPECTION INTERVAL 1	2	PLAN STATUS FIRST PERIOD 1	SECOND PERIOD 2	THIRD PERIOD 3	OUTAGE 1	OUTAGE 2	PRESERVICE YEAR	INSTRUCTIONS **CALIBRATION BLOCK**
	COMPONENT COOLING											
856800	CC-2-AB-001-H7 CC-2-019-713-A43S X-207	F-C NOTE 1	VT-3	1	C	-	-	-	-	-	NA	SPRING
856850	CC-2-AB-001-H7 CC-2-019-713-A43S X-207	D-A D1.20	VT-3	1	C	-	-	-	-	-	NA	WELDED ATTACHMENT
857050	CC-2-AB-001-H10 CC-2-019-715-A43K	F-C NOTE 1	VT-3	1	C	-	-	-	-	-	NA	SNUBBER
857100	CC-2-AB-002-H1 CC-2-045-001-A33R	F-C NOTE 1	VT-3	1	C	-	-	-	-	-	NA	STRUT
857200	CC-2-AB-002-H2 CC-2-045-002-A33R	F-C NOTE 1	VT-3	1	C	-	-	-	-	-	NA	STRUT
857300	CC-2-AB-002-H3 CC-2-045-004-A33R	F-C NOTE 1	VT-3	1	C	-	-	-	-	-	NA	STRUT
859250	CC-2-AB-003-H6 CC-2-012-707-A43R X-207	D-A D1.20	VT-3	1	C	-	-	-	-	-	NA	WELDED ATTACHMENT

SUMMARY NUMBER	EXAMINATION AREA IDENTIFICATION	ASME SEC. XI CATGY ITEM NO	NDE METH	INSPECTION INTERVAL	PLAN STATUS FIRST PERIOD 1	2	OUTAGE 1	2	3	THIRD PERIOD 1	2	PRESERVICE YEAR	INSTRUCTIONS **CALIBRATION BLOCK**
	COMPONENT COOLING												
859400	CC-2-AB-004-H1 CC-2-969-700-A43S R197 800AB	F-C NOTE 1	VT-3	1	-	-	-	-	C	-	-	NA	SPRING
859450	CC-2-AB-004-H1 CC-2-969-700-A43S R197 800AB	D-A D1.20	VT-3	1	-	-	-	-	C	-	-	NA	WELDED ATTACHMENT
862300	CC-2-AB-006-H6 CC-2-028-401-A33R X-174	F-C NOTE 1	VT-3	1	C	-	-	-	-	-	-	NA	STRUT
862350	CC-2-AB-006-H6 CC-2-028-401-A33R X-174	D-A D1.20	VT-3	1	C	-	-	-	-	-	-	NA	WELDED ATTACHMENT
862500	CC-2-AB-006-H8 CC-2-028-404-A33R X-174	F-C NOTE 1	VT-3	1	C	-	-	-	-	-	-	NA	STRUT
862550	CC-2-AB-006-H8 CC-2-028-404-A33R X-174	D-A D1.20	VT-3	1	C	-	-	-	-	-	-	NA	WELDED ATTACHMENT
862700	CC-2-AB-006-H10 CC-2-028-424-A33R X-174	F-C NOTE 1	VT-3	1	C	-	-	-	-	-	-	NA	STRUT

SUMMARY NUMBER	EXAMINATION AREA IDENTIFICATION	ASME SEC. XI CATGY ITEM NO	NDE METH	INSPECTION INTERVAL 1	PLAN STATUS FIRST PERIOD 2	OUTAGE 1	SECOND PERIOD OUTAGE 2	OUTAGE 3	THIRD PERIOD OUTAGE 1	OUTAGE 2	PRESERVICE YEAR	INSTRUCTIONS **CALIBRATION BLOCK**
	COMPONENT COOLING											
862750	CC-2-AB-006-H10 CC-2-028-424-A33R X-174	D-A D1.20	VT-3	1 C	-	-	-	-	-	-	NA	WELDED ATTACHMENT
862800	CC-2-AB-006-H11 CC-2-028-704-A33A	F-C NOTE 1	VT-3	1 C	-	-	-	-	-	-	NA	BOX
862850	CC-2-AB-006-H11 CC-2-028-704-A33A	D-A D1.20	VT-3	1 C	-	-	-	-	-	-	NA	WELDED ATTACHMENT
863100	CC-2-AB-007-H2 CC-2-045-007-A43A	F-C NOTE 1	VT-3	1 C	-	-	-	-	-	-	NA	BOX
863150	CC-2-AB-007-H2 CC-2-045-007-A43A	D-A D1.20	VT-3	1 C	-	-	-	-	-	-	NA	WELDED ATTACHMENT
863900	CC-2-AB-008-H6 CC-2-015-701-A43S X-204	F-C NOTE 1	VT-3	1 C	-	-	-	-	-	-	NA	SPRING
863950	CC-2-AB-008-H6 CC-2-015-701-A43S X-204	D-A D1.20	VT-3	1 C	-	-	-	-	-	-	NA	WELDED ATTACHMENT

SUMMARY NUMBER	EXAMINATION AREA IDENTIFICATION	ASME SEC. XI CATGY ITEM NO	NDE METH	INSPECTION INTERVAL 1	2	PLAN STATUS FIRST PERIOD 1	SECOND PERIOD 2	THIRD PERIOD 3	1	2	PRESERVICE YEAR	INSTRUCTIONS **CALIBRATION BLOCK**
	COMPONENT COOLING											
864000	CC-2-AB-008-H7 CC-2-044-700-A43K X-204	F-C NOTE 1	VT-3	1	C	-	-	-	-	-	NA	SNUBBER
864050	CC-2-AB-008-H7 CC-2-044-700-A43K X-204	D-A D1.20	VT-3	1	C	-	-	-	-	-	NA	WELDED ATTACHMENT
864200	CC-2-AB-009-H1 CC-2-050-001-A43S X-207	F-C NOTE 1	VT-3	1	C	-	-	-	-	-	NA	SPRING
864250	CC-2-AB-009-H1 CC-2-050-001-A43S X-207	D-A D1.20	VT-3	1	C	-	-	-	-	-	NA	WELDED ATTACHMENT
864500	CC-2-AB-009-H4 CC-2-050-701-A43S X-197	F-C NOTE 1	VT-3	1	C	-	-	-	-	-	NA	SPRING
864550	CC-2-AB-009-H4 CC-2-050-701-A43S X-197	D-A D1.20	VT-3	1	C	-	-	-	-	-	NA	WELDED ATTACHMENT
864600	CC-2-AB-009-H5 CC-2-050-702-A43K X-197	F-C NOTE 1	VT-3	1	C	-	-	-	-	-	NA	SNUBBER

SUMMARY NUMBER	EXAMINATION AREA IDENTIFICATION	ASME SEC. XI CATGY ITEM NO	NDE METH	INSPECTION INTERVAL	PLAN STATUS FIRST PERIOD 1	2	SECOND PERIOD 1	2	3	THIRD PERIOD 1	2	PRESERVICE YEAR	INSTRUCTIONS **CALIBRATION BLOCK**
	COMPONENT COOLING												
864650	CC-2-AB-009-H5 CC-2-050-702-A43K X-197	D-A D1.20	VT-3	1 C	-		-	-	-	-	-	NA	WELDED ATTACHMENT
864700	CC-2-AB-009-H6 CC-2-050-703-A43S	F-C NOTE 1	VT-3	1 C	-		-	-	-	-	-	NA	SPRING
864750	CC-2-AB-009-H6 CC-2-050-703-A43S	D-A D1.20	VT-3	1 C	-		-	-	-	-	-	NA	WELDED ATTACHMENT
865200	CC-2-AB-010-H2 CC-2-116-701-A43R X-207	F-C NOTE 1	VT-3	1 C	-		-	-	-	-	-	NA	STRUT
865300	CC-2-AB-011-H1 CC-2-110-700-A43R X-207	F-C NOTE 1	VT-3	1 C	-		-	-	-	-	-	NA	STRUT
865800	CC-2-AB-011-H6 CC-2-155-701-A43A X-194	F-C NOTE 1	VT-3	1 C	-		-	-	-	-	-	NA	BOX
865850	CC-2-AB-011-H6 CC-2-155-701-A43A X-194	D-A D1.20	VT-3	1 C	-		-	-	-	-	-	NA	WELDED ATTACHMENT

SUMMARY NUMBER	EXAMINATION AREA IDENTIFICATION	ASME SEC. XI CATGY ITEM NO	NDE METH	INSPECTION INTERVAL 1	2	PLAN STATUS FIRST PERIOD	SECOND PERIOD (OUTAGE 1	2	3)	THIRD PERIOD (OUTAGE 1	2)	PRESERVICE YEAR	INSTRUCTIONS **CALIBRATION BLOCK**
	COMPONENT COOLING												
866100	CC-2-AB-012-H3	F-C	VT-3	1	C	-	-	-	-	-	-	NA	STRUT
	CC-2-126-401-A43R	NOTE 1											
866300	CC-2-AB-012-H5	F-C	VT-3	1	C	-	-	-	-	-	-	NA	STRUT
	CC-2-133-401-A43R	NOTE 1											
866400	CC-2-AB-012-H6	F-C	VT-3	1	C	-	-	-	-	-	-	NA	BOX
	CC-2-133-700-A43A	NOTE 1											
866450	CC-2-AB-012-H6	D-A	VT-3	1	C	-	-	-	-	-	-	NA	WELDED ATTACHMENT
	CC-2-133-700-A43A	D1.20											
866800	CC-2-AB-012-H10	F-C	VT-3	1	C	-	-	-	-	-	-	NA	SNUBBER
	CC-2-158-407-A43K	NOTE 1											
	X-207												
866850	CC-2-AB-012-H10	D-A	VT-3	1	C	-	-	-	-	-	-	NA	WELDED ATTACHMENT
	CC-2-158-407-A43K	D1.20											
	X-207												
866900	CC-2-AB-012-H11	F-C	VT-3	1	C	-	-	-	-	-	-	NA	SNUBBER
	CC-2-158-408-A43K	NOTE 1											
	X-207												

SUMMARY NUMBER	EXAMINATION AREA IDENTIFICATION	ASME SEC. XI CATGY ITEM NO	NDE METH	INSPECTION INTERVAL 1	PLAN STATUS FIRST PERIOD 2	OUTAGE 1	SECOND PERIOD OUTAGE 2	OUTAGE 3	THIRD PERIOD OUTAGE 1	THIRD PERIOD OUTAGE 2	PRESERVICE YEAR	INSTRUCTIONS **CALIBRATION BLOCK**
	COMPONENT COOLING											
866950	CC-2-AB-012-H11 CC-2-158-408-A43K X-207	D-A D1.20	VT-3	1 C	-	-	-	-	-	-	NA	WELDED ATTACHMENT
871600	CC-2-AB-017-H12 CC-2-008-719-A33A R174 800AB	F-C NOTE 1	VT-3	1 -	-	C	-	-	-	-	NA	BOX
871650	CC-2-AB-017-H12 CC-2-008-719-A33A R174 800AB	D-A D1.20	VT-3	1 -	-	C	-	-	-	-	NA	WELDED ATTACHMENT
872000	CC-2-AB-018-H3 CC-2-040-403-A33R R180 800AB	F-C NOTE 1	VT-3	1 -	-	-	C	-	-	-	NA	BOX
872050	CC-2-AB-018-H3 CC-2-040-403-A33R R180 800AB	D-A D1.20	VT-3	1 -	-	-	C	-	-	-	NA	WELDED ATTACHMENT
872100	CC-2-AB-018-H4 CC-2-040-404-A33R R180 800AB	F-C NOTE 1	VT-3	1 -	-	-	C	-	-	-	NA	STRUT
872150	CC-2-AB-018-H4 CC-2-040-404-A33R R180 800AB	D-A D1.20	VT-3	1 -	-	-	C	-	-	-	NA	WELDED ATTACHMENT

SUMMARY NUMBER	EXAMINATION AREA IDENTIFICATION	ASME SEC. XI CATGY ITEM NO	NDE METH	INSPECTION INTERVAL	PLAN STATUS FIRST PERIOD 1	2	SECOND PERIOD 1	2	3	THIRD PERIOD 1	2	PRESERVICE YEAR	INSTRUCTIONS **CALIBRATION BLOCK**
	COMPONENT COOLING												
872200	CC-2-AB-018-H5 CC-2-048-401-A33R R170 800AB	F-C NOTE 1	VT-3	1	-	-	-	C	-	-	-	NA	STRUT
872900	CC-2-AB-018-H12 CC-2-048-410-A33S R180 800AB	F-C NOTE 1	VT-3	1	-	-	C	-	-	-	-	NA	SPRING
876200	CC-2-AB-026-H2 CC-2-057-014-A33A R180 800AB	F-C NOTE 1	VT-3	1	-	-	C	-	-	-	-	NA	BOX
876250	CC-2-AB-026-H2 CC-2-057-014-A33A R180 800AB	D-A D1.20	VT-3	1	-	-	C	-	-	-	-	NA	WELDED ATTACHMENT
876700	CC-2-AB-027A-H4 CC-2-043-714-A33K R180 800AB	F-C NOTE 1	VT-3	1	-	-	C	-	-	-	-	NA	SNUBBER
876750	CC-2-AB-027A-H4 CC-2-043-714-A33K R180 800AB	D-A D1.20	VT-3	1	-	-	C	-	-	-	-	NA	WELDED ATTACHMENT
877100	CC-2-AB-027A-H8 CC-2-066-700-A33A R180 800AB	F-C NOTE 1	VT-3	1	-	-	C	-	-	-	-	NA	BOX

SUMMARY NUMBER	EXAMINATION AREA IDENTIFICATION	INSPECTION INTERVAL ASME SEC. XI CATGY ITEM NO	NDE METH	PLAN STATUS FIRST PERIOD 1	FIRST PERIOD 2	SECOND PERIOD 1	SECOND PERIOD 2	SECOND PERIOD 3	THIRD PERIOD 1	THIRD PERIOD 2	PRESERVICE YEAR	INSTRUCTIONS **CALIBRATION BLOCK**
	COMPONENT COOLING											
877150	CC-2-AB-027A-H8 CC-2-066-700-A33A R180 800AB	D-A D1.20	VT-3	1	-	C	-	-	-	-	NA	WELDED ATTACHMENT
877200	CC-2-AB-027A-H9 CC-2-068-700-A33A R180 800AB	F-C NOTE 1	VT-3	1	-	C	-	-	-	-	NA	BOX
877250	CC-2-AB-027A-H9 CC-2-068-700-A33A R180 800AB	D-A D1.20	VT-3	1	-	C	-	-	-	-	NA	WELDED ATTACHMENT
878700	CC-2-AB-032-H9 CC-2-011-708-A63R X-241	F-C NOTE 1	VT-3	1	-	-	-	-	X	-	NA	U-BOLT
879800	CC-2-AB-033-H5 CC-2-007-010-A63R X-241	F-C NOTE 1	VT-3	1	-	-	-	C	-	-	NA	STRUT
879850	CC-2-AB-033-H5 CC-2-007-010-A63R X-241	D-A D1.20	VT-3	1	-	-	-	C	-	-	NA	WELDED ATTACHMENT
880200	CC-2-AB-033-H9 CC-2-007-017-A63R X-241	F-C NOTE 1	VT-3	1	-	-	-	C	-	-	NA	STRUT

INSERVICE INSPECTION PLAN

CLASS 3 SCHED/COMPL COMPONENTS

SUMMARY NUMBER	EXAMINATION AREA IDENTIFICATION	ASME SEC. XI CATGY ITEM NO	NDE METH	INSPECTION INTERVAL	PLAN STATUS FIRST PERIOD 1	2	OUTAGE 1	2	3	THIRD PERIOD 1	2	PRESERVICE YEAR	INSTRUCTIONS **CALIBRATION BLOCK**
	COMPONENT COOLING												
880250	CC-2-AB-033-H9 CC-2-007-017-A63R X-241	D-A D1.20	VT-3	1	-	-	-	-	C	-	-	NA	WELDED ATTACHMENT
880700	CC-2-AB-038-H3 CC-2-164-403-A53S	F-C NOTE 1	VT-3	1	-	-	-	-	C	-	-	NA	SPRING
880750	CC-2-AB-038-H3 CC-2-164-403-A53S	D-A D1.20	VT-3	1	-	-	-	-	C	-	-	NA	WELDED ATTACHMENT
881000	CC-2-AB-038-H6 CC-2-164-407-A63K X-235	F-C NOTE 1	VT-3	1	-	-	-	-	C	-	-	NA	SNUBBER
882900	CC-2-AB-039-H9 CC-2-156-710-A53R X-194	F-C NOTE 1	VT-3	1	-	-	-	C	-	-	-	NA	STRUT
882950	CC-2-AB-039-H9 CC-2-156-710-A53R X-194	D-A D1.20	VT-3	1	-	-	-	C	-	-	-	NA	WELDED ATTACHMENT
883000	CC-2-AB-049-H1 CC-2-007-001-A73K X-245	F-C NOTE 1	VT-3	1	-	-	-	C	-	-	-	NA	SNUBBER

SUMMARY NUMBER	EXAMINATION AREA IDENTIFICATION	INSPECTION INTERVAL ASME SEC. XI CATGY ITEM NO	NDE METH	PLAN STATUS FIRST PERIOD 1	2	OUTAGE SECOND PERIOD 1	2	3	OUTAGE THIRD PERIOD 1	2	PRESERVICE YEAR	INSTRUCTIONS **CALIBRATION BLOCK**
	COMPONENT COOLING											
883050	CC-2-AB-049-H1 CC-2-007-001-A73K X-245	D-A D1.20	VT-3	1 -	-	-	C	-	-	-	NA	WELDED ATTACHMENT
883400	CC-2-AB-050-H1 CC-2-011-001-A63R X-241	F-C NOTE 1	VT-3	1 -	-	-	C	-	-	-	NA	STRUT
883450	CC-2-AB-050-H1 CC-2-011-001-A63R X-241	D-A D1.20	VT-3	1 -	-	-	C	-	-	-	NA	WELDED ATTACHMENT
883600	CC-2-AB-050-H3 CC-2-011-003-A73R X-245	F-C NOTE 1	VT-3	1 -	-	-	C	-	-	-	NA	STRUT
883650	CC-2-AB-050-H3 CC-2-011-003-A73R X-245	D-A D1.20	VT-3	1 -	-	-	C	-	-	-	NA	WELDED ATTACHMENT
885100	CC-2-EC-001-H7 CC-2-035-709-E33S X-115B	F-C NOTE 1	VT-3	1 -	-	-	-	C	-	-	NA	SPRING
885150	CC-2-EC-001-H7 CC-2-035-709-E33S X-115B	D-A D1.20	VT-3	1 -	-	-	-	C	-	-	NA	WELDED ATTACHMENT

SUMMARY NUMBER	EXAMINATION AREA IDENTIFICATION	INSPECTION INTERVAL ASME SEC. XI CATGY ITEM NO	NDE METH	PLAN STATUS FIRST PERIOD 1	2	SECOND PERIOD 1	2	3	THIRD PERIOD 1	2	PRESERVICE YEAR	INSTRUCTIONS **CALIBRATION BLOCK**
	COMPONENT COOLING											
885400	CC-2-EC-001-H10 CC-2-035-714-A33A X-180	F-C NOTE 1	VT-3	1 -	-	-	-	C	-	-	NA	BOX
885450	CC-2-EC-001-H10 CC-2-035-714-A33A X-180	D-A D1.20	VT-3	1 -	-	-	-	C	-	-	NA	WELDED ATTACHMENT
886300	CC-2-EC-003A-H1 CC-2-107-700-E23R X-115B	F-C NOTE 1	VT-3	1 -	-	-	C	-	-	-	NA	STRUT
887000	CC-2-EC-004-H1 CC-2-105-401-E23R X-115B	F-C NOTE 1	VT-3	1 -	-	-	-	C	-	-	NA	STRUT
887050	CC-2-EC-004-H1 CC-2-105-401-E23R X-115B	D-A D1.20	VT-3	1 -	-	-	-	C	-	-	NA	WELDED ATTACHMENT
888300	CC-2-FB-002-H1 CC-2-126-004-F43K	F-C NOTE 1	VT-3	1 -	-	-	-	C	-	-	NA	SNUBBER
891200	CC-2-RB-046-H2 CC-2-204-407-C53A 2-155E	F-C NOTE 1	VT-3	1 -	-	-	C	-	-	-	NA	BOX

SUMMARY NUMBER	EXAMINATION AREA IDENTIFICATION	INSPECTION INTERVAL ASME SEC. XI CATGY ITEM NO	NDE METH	PLAN STATUS FIRST PERIOD 1	2	OUTAGE 1	2	3	SECOND PERIOD 1	2	THIRD PERIOD	PRESERVICE YEAR	INSTRUCTIONS **CALIBRATION BLOCK**
	COMPONENT COOLING												
891250	CC-2-RB-046-H2 CC-2-204-407-C53A 2-155E	D-A D1.20	VT-3	1	- -	-	C	-	-	-		NA	WELDED ATTACHMENT
891600	CC-2-RB-046-H6 CC-2-204-421-C53R 2-155E	F-C NOTE 1	VT-3	1	- -	-	C	-	-	-		NA	STRUT
891650	CC-2-RB-046-H6 CC-2-204-421-C53R 2-155E	D-A D1.20	VT-3	1	- -	-	C	-	-	-		NA	WELDED ATTACHMENT
892000	CC-2-RB-086-H2 CC-2-246-423-C53R 2-155D	F-C NOTE 1	VT-3	1	- -	-	-	-	X	-		NA	STRUT
892050	CC-2-RB-086-H2 CC-2-246-423-C53R 2-155D	D-A D1.20	VT-3	1	- -	-	-	-	X	-		NA	WELDED ATTACHMENT
892200	CC-2-RB-084-H4 CC-2-249-404-C53R 2-155D	F-C NOTE 1	VT-3	1	- -	-	-	-	X	-		NA	STRUT
892250	CC-2-RB-084-H4 CC-2-249-404-C53R 2-155D	D-A D1.20	VT-3	1	- -	-	-	-	X	-		NA	WELDED ATTACHMENT

INSERVICE INSPECTION PLAN

CLASS 3 SCHED/COMPL COMPONENTS

SUMMARY NUMBER	EXAMINATION AREA IDENTIFICATION	ASME SEC. XI CATGY ITEM NO	NDE METH	INSPECTION INTERVAL FIRST PERIOD 1	2	PLAN STATUS SECOND PERIOD 1	2	3	THIRD PERIOD 1	2	PRESERVICE YEAR	INSTRUCTIONS **CALIBRATION BLOCK**
				OUTAGE								
	COMPONENT COOLING											
892900	CC-2-RB-085-H6 CC-2-204-420-C53R 2-155E	F-C NOTE 1	VT-3	1 -	-	-	-	-	X	-	NA	STRUT
892950	CC-2-RB-085-H6 CC-2-204-420-C53R 2-155E	D-A D1.20	VT-3	1 -	-	-	-	-	X	-	NA	WELDED ATTACHMENT
893600	CC-2-RB-086-H4 CC-2-246-419-C53R 2-155D	F-C NOTE 1	VT-3	1 -	-	-	-	-	X	-	NA	STRUT
893650	CC-2-RB-086-H4 CC-2-246-419-C53R 2-155D	D-A D1.20	VT-3	1 -	-	-	-	-	X	-	NA	WELDED ATTACHMENT
893800	CC-2-RB-086-H6 CC-2-246-422-C53A 2-155D	F-C NOTE 1	VT-3	1 -	-	-	-	-	X	-	NA	BOX
893850	CC-2-RB-086-H6 CC-2-246-422-C53A 2-155D	D-A D1.20	VT-3	1 -	-	-	-	-	X	-	NA	WELDED ATTACHMENT
894000	CC-2-RB-097-H1 CC-2-201-402-C53R 2-155G	F-C NOTE 1	VT-3	1 -	-	-	C	-	-	-	NA	STRUT

SUMMARY NUMBER	EXAMINATION AREA IDENTIFICATION	INSPECTION INTERVAL ASME SEC. XI CATGY ITEM NO	NDE METH	PLAN STATUS FIRST PERIOD 1	2	OUTAGE 1	2	3	SECOND PERIOD 1	2	THIRD PERIOD	PRESERVICE YEAR	INSTRUCTIONS **CALIBRATION BLOCK**
	COMPONENT COOLING												
894050	CC-2-RB-097-H1 CC-2-201-402-C53R 2-155G	D-A D1.20	VT-3	1	-	-	-	C	-	-	-	NA	WELDED ATTACHMENT
894100	CC-2-RB-097-H2 CC-2-201-404-C53R 2-155G	F-C NOTE 1	VT-3	1	-	-	-	C	-	-	-	NA	STRUT
894150	CC-2-RB-097-H2 CC-2-201-404-C53R 2-155G	D-A D1.20	VT-3	1	-	-	-	C	-	-	-	NA	WELDED ATTACHMENT
894700	CC-2-SB-034B-H1 CC-2-008-406-S33R 2-070	F-C NOTE 1	VT-3	1	-	-	-	-	C	-	-	NA	STRUT
894750	CC-2-SB-034B-H1 CC-2-008-406-S33R 2-070	D-A D1.20	VT-3	1	-	-	-	-	C	-	-	NA	WELDED ATTACHMENT
894900	CC-2-SB-034B-H3 CC-2-030-401-S33R 2-070	F-C NOTE 1	VT-3	1	-	-	-	-	C	-	-	NA	STRUT
895600	CC-2-SB-035-H4 CC-2-028-428-S33R 2-070	F-C NOTE 1	VT-3	1	-	-	-	-	C	-	-	NA	BOX

INSERVICE INSPECTION PLAN

CLASS 3 SCHED/COMPL COMPONENTS

SUMMARY NUMBER	EXAMINATION AREA IDENTIFICATION	ASME SEC. XI CATGY ITEM NO	NDE METH	INSPECTION INTERVAL FIRST PERIOD 1	2	PLAN STATUS OUTAGE SECOND PERIOD 1	2	3	THIRD PERIOD 1	2	PRESERVICE YEAR	INSTRUCTIONS **CALIBRATION BLOCK**
	COMPONENT COOLING											
895650	CC-2-SB-035-H4 CC-2-028-428-S33R 2-070	D-A D1.20	VT-3	1 -	-	-	-	C	-	-	NA	WELDED ATTACHMENT
895700	CC-2-SB-035-H5 CC-2-031-409-S33R 2-070	F-C NOTE 1	VT-3	1 -	-	-	-	C	-	-	NA	BOX
895750	CC-2-SB-035-H5 CC-2-031-409-S33R 2-070	D-A D1.20	VT-3	1 -	-	-	-	C	-	-	NA	WELDED ATTACHMENT
896600	CC-2-SB-036-H3 CC-2-028-417-S33R 2-071	F-C NOTE 1	VT-3	1 -	-	-	C	-	-	-	NA	STRUT
896650	CC-2-SB-036-H3 CC-2-028-417-S33R 2-071	D-A D1.20	VT-3	1 -	-	-	C	-	-	-	NA	WELDED ATTACHMENT
896700	CC-2-SB-036-H4 CC-2-028-422-S33R 2-071	F-C NOTE 1	VT-3	1 -	-	-	C	-	-	-	NA	STRUT
896750	CC-2-SB-036-H4 CC-2-028-422-S33R 2-071	D-A D1.20	VT-3	1 -	-	-	C	-	-	-	NA	WELDED ATTACHMENT

INSERVICE INSPECTION PLAN

CLASS 3 SCHED/COMPL COMPONENTS

SUMMARY NUMBER	EXAMINATION AREA IDENTIFICATION	ASME SEC. XI CATGY ITEM NO	NDE METH	INSPECTION INTERVAL FIRST PERIOD 1	2	PLAN STATUS SECOND PERIOD 1	2	3	THIRD PERIOD 1	2	PRESERVICE YEAR	INSTRUCTIONS **CALIBRATION BLOCK**
				- - - - - - OUTAGE								
	COMPONENT COOLING											
896900	CC-2-SB-037-H2 CC-2-077-403-S43S 2-069	F-C NOTE 1	VT-3	1 -	-	-	C	-	-	-	NA	SPRING
896950	CC-2-SB-037-H2 CC-2-077-403-S43S 2-069	D-A D1.20	VT-3	1 -	-	-	C	-	-	-	NA	WELDED ATTACHMENT
897200	CC-2-SB-037-H5 CC-2-077-406-S43S 2-069	F-C NOTE 1	VT-3	1 -	-	-	C	-	-	-	NA	SPRING
897250	CC-2-SB-037-H5 CC-2-077-406-S43S 2-069	D-A D1.20	VT-3	1 -	-	-	C	-	-	-	NA	WELDED ATTACHMENT
897400	CC-2-SB-038-H1 CC-2-031-401-S33K 2-069	F-C NOTE 1	VT-3	1 C	-	-	-	-	-	-	NA	SNUBBER
897450	CC-2-SB-038-H1 CC-2-031-401-S33K 2-069	D-A D1.20	VT-3	1 C	-	-	-	-	-	-	NA	WELDED ATTACHMENT
897600	CC-2-SB-038-H3 CC-2-031-407-S43S 2-069	F-C NOTE 1	VT-3	1 C	-	-	-	-	-	-	NA	SPRING

SUMMARY NUMBER	EXAMINATION AREA IDENTIFICATION	INSPECTION INTERVAL ASME SEC. XI CATGY ITEM NO	NDE METH	PLAN STATUS FIRST PERIOD 1	2	SECOND PERIOD 1	2	3	THIRD PERIOD 1	2	PRESERVICE YEAR	INSTRUCTIONS **CALIBRATION BLOCK**
				OUTAGE								
	COMPONENT COOLING											
897650	CC-2-SB-038-H3 CC-2-031-407-S43S 2-069	D-A D1.20	VT-3	1 C	-	-	-	-	-	-	NA	WELDED ATTACHMENT
898200	CC-2-SB-039-H2 CC-2-028-409-S33R 2-063	F-C NOTE 1	VT-3	1 C	-	-	-	-	-	-	NA	STRUT
898250	CC-2-SB-039-H2 CC-2-028-409-S33R 2-063	D-A D1.20	VT-3	1 C	-	-	-	-	-	-	NA	WELDED ATTACHMENT
898400	CC-2-SB-039-H4 CC-2-028-411-S33K 2-063	F-C NOTE 1	VT-3	1 C	-	-	-	-	-	-	NA	SNUBBER
898450	CC-2-SB-039-H4 CC-2-028-411-S33K 2-063	D-A D1.20	VT-3	1 C	-	-	-	-	-	-	NA	WELDED ATTACHMENT
898500	CC-2-SB-039-H5 CC-2-028-412-S33R 2-064	F-C NOTE 1	VT-3	1 C	-	-	-	-	-	-	NA	SNUBBER
898550	CC-2-SB-039-H5 CC-2-028-412-S33R 2-064	D-A D1.20	VT-3	1 C	-	-	-	-	-	-	NA	WELDED ATTACHMENT

SUMMARY NUMBER	EXAMINATION AREA IDENTIFICATION	INSPECTION INTERVAL ASME SEC. XI CATGY ITEM NO	NDE METH	PLAN STATUS FIRST PERIOD 1	2	SECOND PERIOD 1	2	3	THIRD PERIOD 1	2	PRESERVICE YEAR	INSTRUCTIONS **CALIBRATION BLOCK**
	COMPONENT COOLING											
898600	CC-2-SB-039-H6 CC-2-028-413-S33R 2-064	F-C NOTE 1	VT-3	1 C	-	-	-	-	-	-	NA	STRUT
898650	CC-2-SB-039-H6 CC-2-028-413-S33R 2-064	D-A D1.20	VT-3	1 C	-	-	-	-	-	-	NA	WELDED ATTACHMENT
898700	CC-2-SB-039-H7 CC-2-028-414-S33R 2-065	F-C NOTE 1	VT-3	1 C	-	-	-	-	-	-	NA	STRUT
898750	CC-2-SB-039-H7 CC-2-028-414-S33R 2-065	D-A D1.20	VT-3	1 C	-	-	-	-	-	-	NA	WELDED ATTACHMENT
899300	CC-2-SB-040-H5 CC-2-065-411-S43S 2-068	F-C NOTE 1	VT-3	1 C	-	-	-	-	-	-	NA	SPRING
899350	CC-2-SB-040-H5 CC-2-065-411-S43S 2-068	D-A D1.20	VT-3	1 C	-	-	-	-	-	-	NA	WELDED ATTACHMENT
900200	CC-2-SB-042-H5 CC-2-065-402-S33R 2-070	F-C NOTE 1	VT-3	1 C	-	-	-	-	-	-	NA	BOX

SUMMARY NUMBER	EXAMINATION AREA IDENTIFICATION	ASME SEC. XI CATGY ITEM NO	NDE METH	INSPECTION INTERVAL	PLAN STATUS FIRST PERIOD (OUTAGE 1 2)	PLAN STATUS SECOND PERIOD (OUTAGE 1 2 3)	PLAN STATUS THIRD PERIOD (OUTAGE 1 2)	PRESERVICE YEAR	INSTRUCTIONS **CALIBRATION BLOCK**
	COMPONENT COOLING								
900250	CC-2-SB-042-H5 CC-2-065-402-S33R 2-070	D-A D1.20	VT-3	1 C	- -	- - -	- -	NA	WELDED ATTACHMENT
900300	CC-2-SB-042-H6 CC-2-065-404-S33R 2-068	F-C NOTE 1	VT-3	1 C	- -	- - -	- -	NA	STRUT
900350	CC-2-SB-042-H6 CC-2-065-404-S33R 2-068	D-A D1.20	VT-3	1 C	- -	- - -	- -	NA	WELDED ATTACHMENT
900500	CC-2-SB-042-H8 CC-2-078-401-S33R 2-070	F-C NOTE 1	VT-3	1 C	- -	- - -	- -	NA	STRUT
900550	CC-2-SB-042-H8 CC-2-078-401-S33R 2-070	D-A D1.20	VT-3	1 C	- -	- - -	- -	NA	WELDED ATTACHMENT
902500	CC-2-SB-047-H2 CC-2-008-402-S33R R063 800AB	F-C NOTE 1	VT-3	1 -	- -	- C -	- -	NA	STRUT
902550	CC-2-SB-047-H2 CC-2-008-402-S33R R063 800SB	D-A D1.20	VT-3	1 -	- -	- C -	- -	NA	WELDED ATTACHMENT

SUMMARY NUMBER	EXAMINATION AREA IDENTIFICATION	ASME SEC. XI CATGY ITEM NO	NDE METH	INSPECTION INTERVAL 1	2	PLAN STATUS FIRST PERIOD 1	2	SECOND PERIOD 1	2	3	THIRD PERIOD 1	2	PRESERVICE YEAR	INSTRUCTIONS **CALIBRATION BLOCK**
	COMPONENT COOLING													
903100	CC-2-SB-048-H3 CC-2-159-409-S53R R088 839SB	F-C NOTE 1	VT-3	1	-	-	-	-	C	-	-	-	NA	STRUT-With App RR D-1
903150	CC-2-SB-048-H3 CC-2-159-409-S53R R088 839SB	D-A D1.20	VT-3	1	-	-	-	-	C	-	-	-	NA	WELDED ATTACHMENT-App RR D-1
903800	CC-2-SB-052-H3 CC-2-155-408-S53R R088 839SB	F-C NOTE 1	VT-3	1	-	-	-	-	C	-	-	-	NA	STRUT-with APP RR D-1
903850	CC-2-SB-052-H3 CC-2-155-408-S53R R088 839SB	D-A D1.20	VT-3	1	-	-	-	-	C	-	-	-	NA	WELDED ATTACHMENT-App RR D-1
904000	CC-2-SB-052-H5 CC-2-202-401-S53A 2-088	F-C NOTE 1	VT-3	1	-	-	-	-	-	-	X	-	NA	BOX
904050	CC-2-SB-052-H5 CC-2-202-401-S53A 2-088	D-A D1.20	VT-3	1	-	-	-	-	-	-	X	-	NA	WELDED ATTACHMENT
907750	CC-2-SB-063-H4 CC-2-146-405-S43R 2-086	D-A D1.20	VT-3	1	-	-	-	C	-	-	-	-	NA	WELDED ATTACHMENT

SUMMARY NUMBER	EXAMINATION AREA IDENTIFICATION	ASME SEC. XI CATGY ITEM NO	NDE METH	INSPECTION INTERVAL FIRST PERIOD 1	2	PLAN STATUS FIRST PERIOD 1	2	SECOND PERIOD 1	2	3	THIRD PERIOD 1	2	PRESERVICE YEAR	INSTRUCTIONS **CALIBRATION BLOCK**
								OUTAGE						
	COMPONENT COOLING													
908100	CC-2-SB-063-H8 CC-2-167-402-S43R 2-086	F-C NOTE 1	VT-3	1	-	-	-	C	-	-	-	-	NA	STRUT
908150	CC-2-SB-063-H8 CC-2-167-402-S43R 2-086	D-A D1.20	VT-3	1	-	-	-	C	-	-	-	-	NA	WELDED ATTACHMENT
	DIESEL OIL													
910600	DO-2-DG-018-H2 DO-2-056-402-D53A R085 838DG	F-C NOTE 1	VT-3	1	-	-	C	-	-	-	-	-	NA	BOX
910650	DO-2-DG-018-H2 DO-2-056-402-D53A R085 838DG	D-A D1.20	VT-3	1	-	-	C	-	-	-	-	-	NA	WELDED ATTACHMENT
910900	DO-2-DG-020-H2 DO-2-053-402-D53A R085 838DG	F-C NOTE 1	VT-3	1	-	-	C	-	-	-	-	-	NA	BOX
910950	DO-2-DG-020-H2 DO-2-053-402-D53A R085 838DG	D-A D1.20	VT-3	1	-	-	C	-	-	-	-	-	NA	WELDED ATTACHMENT
	MAIN STEAM													
912800	MS-2-SB-001-H1 MS-2-415-001-S23R 2-074	F-C NOTE 1	VT-3	1	-	-	-	-	C	-	-	-	NA	BOX

SUMMARY NUMBER	EXAMINATION AREA IDENTIFICATION	ASME SEC. XI CATGY ITEM NO	NDE METH	INSPECTION INTERVAL	PLAN STATUS FIRST PERIOD 1	FIRST PERIOD 2	SECOND PERIOD 1	SECOND PERIOD 2	SECOND PERIOD 3	THIRD PERIOD 1	THIRD PERIOD 2	PRESERVICE YEAR	INSTRUCTIONS **CALIBRATION BLOCK**
	MAIN STEAM												
912850	MS-2-SB-001-H1 MS-2-415-001-S23R 2-074	D-A D1.20	VT-3	1	-	-	-	-	C	-	-	NA	WELDED ATTACHMENT
912900	MS-2-SB-001-H2 MS-2-416-401-S33R 2-074	F-C NOTE 1	VT-3	1	-	-	-	-	C	-	-	NA	STRUT
913600	MS-2-SB-002-H1 MS-2-416-405-S43R 2-082	F-C NOTE 1	VT-3	1	-	-	-	-	C	-	-	NA	STRUT
913650	MS-2-SB-002-H1 MS-2-416-405-S43R 2-082	D-A D1.20	VT-3	1	-	-	-	-	C	-	-	NA	WELDED ATTACHMENT
	SERVICE WATER												
915800	SW-2-AB-003-H1 SW-2-004-001-A33R R175 800AB	F-C NOTE 1	VT-3	1	-	-	C	-	-	-	-	NA	STRUT
915900	SW-2-AB-003-H2 SW-2-004-002-A33R R175 800AB	F-C NOTE 1	VT-3	1	-	-	C	-	-	-	-	NA	STRUT
916100	SW-2-AB-003-H4 SW-2-004-005-A33R R175 800AB	F-C NOTE 1	VT-3	1	-	-	C	-	-	-	-	NA	STRUT

INSERVICE INSPECTION PLAN

CLASS 3 SCHED/COMPL COMPONENTS

SUMMARY NUMBER	EXAMINATION AREA IDENTIFICATION	ASME SEC. XI CATGY ITEM NO	NDE METH	INSPECTION INTERVAL 1	2	PLAN STATUS FIRST PERIOD 1	SECOND PERIOD 2	THIRD PERIOD 3	1	2	PRESERVICE YEAR	INSTRUCTIONS **CALIBRATION BLOCK**
	SERVICE WATER											
916200	SW-2-AB-003-H5 SW-2-004-006-A33R R175 800AB	F-C NOTE 1	VT-3	1	- -	C	- -		- -		NA	STRUT
917200	SW-2-AB-005-H3 SW-2-102-020-A43R R204 817AB	F-C NOTE 1	VT-3	1	- -	C	- -		- -		NA	STRUT
917250	SW-2-AB-005-H3 SW-2-102-020-A43R R204 817AB	D-A D1.20	VT-3	1	- -	C	- -		- -		NA	WELDED ATTACHMENT
918600	SW-2-AB-006-H7 SW-2-173-022-A43R R207 810AB	F-C NOTE 1	VT-3	1	- -	C	- -		- -		NA	STRUT
918650	SW-2-AB-006-H7 SW-2-173-022-A43R R207 810AB	D-A D1.20	VT-3	1	- -	C	- -		- -		NA	WELDED ATTACHMENT
919700	SW-2-AB-007-H2 SW-2-012-022-F33K RFBSW787AB	F-C NOTE 1	VT-3	1	- -	-	-	C	- -		NA	SNUBBER
919750	SW-2-AB-007-H2 SW-2-012-022-F33K RFBSW787AB	D-A D1.20	VT-3	1	- -	-	-	C	- -		NA	WELDED ATTACHMENT

SUMMARY NUMBER	EXAMINATION AREA IDENTIFICATION	ASME SEC. XI CATGY ITEM NO	NDE METH	INSPECTION INTERVAL FIRST PERIOD 1	2	PLAN STATUS SECOND PERIOD 1	2	3	THIRD PERIOD 1	2	PRESERVICE YEAR	INSTRUCTIONS **CALIBRATION BLOCK**
	SERVICE WATER											
920600	SW-2-AB-008-H2 SW-2-010-002-A33K R175 787AB	F-C NOTE 1	VT-3	1	- -	C	-	-	-	-	NA	SNUBBER
921600	SW-2-AB-008-H13 SW-2-129-004-A33K R175 787AB	F-C NOTE 1	VT-3	1	- -	-	-	C	-	-	NA	SNUBBER
921650	SW-2-AB-008-H13 SW-2-129-004-A33K R175 787AB	D-A D1.20	VT-3	1	- -	-	-	C	-	-	NA	WELDED ATTACHMENT
924500	SW-2-AB-010-H14 SW-2-129-025-A43R R207 787AB	F-C NOTE 1	VT-3	1	- -	C	-	-	-	-	NA	STRUT
924550	SW-2-AB-010-H14 SW-2-129-025-A43R R207 787AB	D-A D1.20	VT-3	1	- -	C	-	-	-	-	NA	WELDED ATTACHMENT
925650	TX-ISI-8SW-2-AB-012-H1 SW-2-132-006-A43R X-207	D-A D1.20	VT-3	1	- -	-	-	-	-	X	NA	WELDED ATTACHMENT
927000	SW-2-AB-012-H15 SW-2-132-021-A43R X-207	F-C NOTE 1	VT-3	1	- -	-	-	-	-	X	NA	STRUT

INSERVICE INSPECTION PLAN

CLASS 3 SCHED/COMPL COMPONENTS

SUMMARY NUMBER	EXAMINATION AREA IDENTIFICATION	ASME SEC. XI CATGY ITEM NO	NDE METH	INSPECTION INTERVAL 1	PLAN STATUS FIRST PERIOD 2	OUTAGE 1	SECOND PERIOD OUTAGE 2	OUTAGE 3	THIRD PERIOD OUTAGE 1	THIRD PERIOD 2	PRESERVICE YEAR	INSTRUCTIONS **CALIBRATION BLOCK**
	SERVICE WATER											
927050	SW-2-AB-012-H15 SW-2-132-021-A43R X-207	D-A D1.20	VT-3	1	-	-	-	-	-	X	NA	WELDED ATTACHMENT
931300	SW-2-FB-001-H7 SW-2-001-021-F33R	F-C NOTE 1	VT-3	1	-	-	-	-	-	X	NA	STRUT
931350	SW-2-FB-001-H7 SW-2-001-021-F33R	D-A D1.20	VT-3	1	-	-	-	-	-	X	NA	WELDED ATTACHMENT
934000	SW-2-FB-004-H8 SW-2-012-024-F33K X-FBSWT	F-C NOTE 1	VT-3	1	-	-	-	-	-	X	NA	SNUBBER
934050	SW-2-FB-004-H8 SW-2-012-024-F33K X-FBSWT	D-A D1.20	VT-3	1	-	-	-	-	-	X	NA	WELDED ATTACHMENT
934500	SW-2-SB-013-H1 SW-2-102-429-S43A 2-082	F-C NOTE 1	VT-3	1	-	-	-	-	-	X	NA	BOX
934550	SW-2-SB-013-H1 SW-2-102-429-S43A 2-082	D-A D1.20	VT-3	1	-	-	-	-	-	X	NA	WELDED ATTACHMENT

SUMMARY NUMBER	EXAMINATION AREA IDENTIFICATION	ASME SEC. XI CATGY ITEM NO	NDE METH	INSPECTION INTERVAL 1	2	PLAN STATUS FIRST PERIOD 1	SECOND PERIOD 2	3	THIRD PERIOD 1	2	PRESERVICE YEAR	INSTRUCTIONS **CALIBRATION BLOCK**
	SERVICE WATER											
934700	SW-2-SB-013-H3 SW-2-102-431-S43R 2-082	F-C NOTE 1	VT-3	1	- -	-	-	-	-	X	NA	STRUT
934750	SW-2-SB-013-H3 SW-2-102-431-S43R 2-082	D-A D1.20	VT-3	1	- -	-	-	-	-	X	NA	WELDED ATTACHMENT
934900	SW-2-SB-013-H5 SW-2-102-433-S43R 2-082	F-C NOTE 1	VT-3	1	- -	-	-	-	-	X	NA	STRUT
934950	SW-2-SB-013-H5 SW-2-102-433-S43R 2-082	D-A D1.20	VT-3	1	- -	-	-	-	-	X	NA	WELDED ATTACHMENT
935100	SW-2-SB-013-H7 SW-2-102-435-S43R 2-082	F-C NOTE 1	VT-3	1	- -	-	-	-	-	X	NA	STRUT
935150	SW-2-SB-013-H7 SW-2-102-435-S43R 2-082	D-A D1.20	VT-3	1	- -	-	-	-	-	X	NA	WELDED ATTACHMENT
935300	SW-2-SB-013-H9 SW-2-102-437-S43R 2-082	F-C NOTE 1	VT-3	1	- -	-	-	-	-	X	NA	STRUT

SUMMARY NUMBER	EXAMINATION AREA IDENTIFICATION	ASME SEC. XI CATGY ITEM NO	NDE METH	INSPECTION INTERVAL	PLAN STATUS FIRST PERIOD 1	2	SECOND PERIOD 1	2	3	THIRD PERIOD 1	2	PRESERVICE YEAR	INSTRUCTIONS **CALIBRATION BLOCK**
	SERVICE WATER												
935350	SW-2-SB-013-H9 SW-2-102-437-S43R 2-082	D-A D1.20	VT-3	1	-	-	-	-	-	-	X	NA	WELDED ATTACHMENT
935800	SW-2-SB-014-H5 SW-2-129-445-S43A 2-082	F-C NOTE 1	VT-3	1	-	-	-	-	-	-	X	NA	BOX
935850	SW-2-SB-014-H5 SW-2-129-445-S43A 2-082	D-A D1.20	VT-3	1	-	-	-	-	-	-	X	NA	WELDED ATTACHMENT
936500	SW-2-SB-018-H1 SW-2-100-401-S33R 2-070	F-C NOTE 1	VT-3	1	-	-	-	-	-	-	X	NA	STRUT
936550	SW-2-SB-018-H1 SW-2-100-401-S33R 2-070	D-A D1.20	VT-3	1	-	-	-	-	-	-	X	NA	WELDED ATTACHMENT
936700	SW-2-SB-019-H2 SW-2-102-439-S43R 2-082	F-C NOTE 1	VT-3	1	-	-	-	-	-	-	X	NA	STRUT
936750	SW-2-SB-019-H2 SW-2-102-439-S43R 2-082	D-A D1.20	VT-3	1	-	-	-	-	-	-	X	NA	WELDED ATTACHMENT

INSERVICE INSPECTION PLAN

CLASS 3 SCHED/COMPL COMPONENTS

SUMMARY NUMBER	EXAMINATION AREA IDENTIFICATION	ASME SEC. XI CATGY ITEM NO	NDE METH	INSPECTION INTERVAL 1	2	PLAN STATUS FIRST PERIOD 1	SECOND PERIOD 2	OUTAGE 3	THIRD PERIOD 1	2	PRESERVICE YEAR	INSTRUCTIONS **CALIBRATION BLOCK**
	SERVICE WATER											
937000	SW-2-SB-019-H5 SW-2-102-443-S43R 2-082	F-C NOTE 1	VT-3	1	- -	-	-	-	-	X	NA	STRUT
937050	SW-2-SB-019-H5 SW-2-102-443-S43R 2-082	D-A D1.20	VT-3	1	- -	-	-	-	-	X	NA	WELDED ATTACHMENT
938500	SW-2-SB-021-H6 SW-2-132-416-S43R 2-082	F-C NOTE 1	VT-3	1	- -	-	-	-	-	X	NA	STRUT
938550	SW-2-SB-021-H6 SW-2-132-416-S43R 2-082	D-A D1.20	VT-3	1	- -	-	-	-	-	X	NA	WELDED ATTACHMENT
938800	SW-2-SB-021-H9 SW-2-132-443-S33R 2-070	F-C NOTE 1	VT-3	1	- -	-	-	-	-	X	NA	STRUT
938850	SW-2-SB-021-H9 SW-2-132-443-S33R 2-070	D-A D1.20	VT-3	1	- -	-	-	-	-	X	NA	WELDED ATTACHMENT
939200	SW-2-SB-022-H4 SW-2-173-410-S43A	F-C NOTE 1	VT-3	1	- -	-	-	-	-	X	NA	BOX

SUMMARY NUMBER	EXAMINATION AREA IDENTIFICATION	ASME SEC. XI CATGY ITEM NO	NDE METH	INSPECTION INTERVAL 1	2	PLAN STATUS FIRST PERIOD 1	SECOND PERIOD 2	3	THIRD PERIOD 1	2	PRESERVICE YEAR	INSTRUCTIONS **CALIBRATION BLOCK**
	SERVICE WATER											
939250	SW-2-SB-022-H4 SW-2-173-410-S43A	D-A D1.20	VT-3	1	- -	-	-	-	-	X	NA	WELDED ATTACHMENT
939700	SW-2-SB-023-H5 SW-2-132-439-S43A 2-082	F-C NOTE 1	VT-3	1	- -	-	-	-	-	X	NA	BOX
939750	SW-2-SB-023-H5 SW-2-132-439-S43A 2-082	D-A D1.20	VT-3	1	- -	-	-	-	-	X	NA	WELDED ATTACHMENT
943150	SW-2-YD-005-H17 SW-2-173-704-S33R 2-070	D-A D1.20	VT-3	1	- -	-	-	-	-	X	NA	WELDED ATTACHMENT
943200	SW-2-YD-005-H18 SW-2-173-705-Y33A 2-085D	F-C NOTE 1	VT-3	1	- -	-	-	-	-	X	NA	BOX
943250	SW-2-YD-005-H18 SW-2-173-705-Y33A 2-085D	D-A D1.20	VT-3	1	- -	-	-	-	-	X	NA	WELDED ATTACHMENT
943900	SW-2-YD-006-H6 SW-2-132-428-Y33R R085D800YD	F-C NOTE 1	VT-3	1	- -	C	-	-	-	-	NA	BOX

SUMMARY NUMBER	EXAMINATION AREA IDENTIFICATION	ASME SEC. XI CATGY ITEM NO	NDE METH	INSPECTION INTERVAL 1	2	PLAN STATUS FIRST PERIOD	OUTAGE 1	SECOND PERIOD OUTAGE 2	OUTAGE 3	THIRD PERIOD OUTAGE 1	OUTAGE 2	PRESERVICE YEAR	INSTRUCTIONS **CALIBRATION BLOCK**
	SERVICE WATER												
943950	SW-2-YD-006-H6 SW-2-132-428-Y33R R085D800YD	D-A D1.20	VT-3	1	-	-	C	-	-	-	-	NA	WELDED ATTACHMENT
945000	SW-2-YD-006-H17 SW-2-132-701-Y33A R085D800YD	F-C NOTE 1	VT-3	1	-	-	C	-	-	-	-	NA	BOX
945050	SW-2-YD-006-H17 SW-2-132-701-Y33A R085D800YD	D-A D1.20	VT-3	1	-	-	C	-	-	-	-	NA	WELDED ATTACHMENT
946950	SW-2-YD-007-H18 SW-2-102-471-S33R 2-070	D-A D1.20	VT-3	1	-	-	-	-	-	-	X	NA	WELDED ATTACHMENT
947100	SW-2-YD-007-H20 SW-2-102-482-Y33R 2-085D	F-C NOTE 1	VT-3	1	-	-	-	-	-	-	X	NA	STRUT
947150	SW-2-YD-007-H20 SW-2-102-482-Y33R 2-085D	D-A D1.20	VT-3	1	-	-	-	-	-	-	X	NA	WELDED ATTACHMENT
	SW-2-YD-007-H21 .												
947200	SW-2-YD-007-H21 SW-2-102-700-Y33A 2-085D	F-C NOTE 1	VT-3	1	-	-	-	-	-	-	X	NA	BOX

INSERVICE INSPECTION PLAN

CLASS 3 SCHED/COMPL COMPONENTS

SUMMARY NUMBER	EXAMINATION AREA IDENTIFICATION	ASME SEC. XI CATGY ITEM NO	NDE METH	INSPECTION INTERVAL FIRST PERIOD 1	2	PLAN STATUS SECOND PERIOD 1	2	3	THIRD PERIOD 1	2	PRESERVICE YEAR	INSTRUCTIONS **CALIBRATION BLOCK**
	SERVICE WATER											
947250	SW-2-YD-007-H21 SW-2-102-700-Y33A 2-085D	D-A D1.20	VT-3	1	-	-	-	-	-	X	NA	WELDED ATTACHMENT
948150	SW-2-YD-008-H8 SW-2-129-456-Y33R 2-085D	D-A D1.20	VT-3	1	-	-	-	-	-	X	NA	WELDED ATTACHMENT
948950	SW-2-YD-008-H16 SW-2-129-464-Y33R 2-085D	D-A D1.20	VT-3	1	-	-	-	-	-	X	NA	WELDED ATTACHMENT
	AUXILIARY FEEDWATER 4-AF-2-104-2003-3											
950000	AF-2-SB-026B-MR1 CP2-AFSSMR-01 R100A861SB	F-B NOTE 1	VT-3	1	-	-	-	-	X	-	NA	MOMENT RESTRAINT, S2-0688-10
	SERVICE WATER CP2-SWAPSW-01											
950800	SW-2-SI-002-PS1 SSW PUMP SUPPORTS RSWI 761SI	F-B NOTE 1	VT-3	1	-	-	-	-	-	X	NA	
950900	SW-2-SI-002-PS2 SSW PUMP SUPPORTS RSWI 772SI	F-B NOTE 1	VT-3	1	-	-	-	-	-	X	NA	

SUMMARY NUMBER	EXAMINATION AREA IDENTIFICATION	ASME SEC. XI CATGY ITEM NO	NDE METH	INSPECTION INTERVAL 1	2	PLAN STATUS FIRST PERIOD 1	SECOND PERIOD 2	3	THIRD PERIOD 1	2	PRESERVICE YEAR	INSTRUCTIONS **CALIBRATION BLOCK**
	SERVICE WATER CP2-SWAPSW-01											
951000	SW-2-SI-002-PS3 SSW PUMP SUPPORTS RSWI 784SI	F-B NOTE 1	VT-3	1 -	-	-	-	-	-	X	NA	
	COMPONENT COOLING WATER CP2-CCAPCC-01											
951400	CC-2-AB-001-PS1 CCW PUMP SUPPORTS R205 810AB	F-B NOTE 1	VT-3	1 -	-	C	-	-	-	-	NA	BASE. DWG FP-1421067417
	COMPONENT COOLING WATER CP2-CCAHHX-01											
951600	CC-2-AB-005-HXS1 CCW HX SUPPORT R174 790AB	F-B NOTE 1	VT-3	1 -	-	-	-	-	-	X	NA	DWG 2-74-06-32467D3
951700	CC-2-AB-005-HXWS1 CCW HX SUPPORT WELDED ATTACHMENT R174 790AB	D-A D1.20	VT-3	1 -	-	-	-	-	-	X	NA	SADDLES. DWG 2-74-06-32467D3
	COMPONENT COOLING WATER CP2-CCATST-01											
952000	CC-2-AB-045-TS1 CCW SURGE TANK SUPPORTS R245 873AB	F-B NOTE 1	VT-3	1 -	-	-	-	-	-	X	NA	DWG N-2640-359
952100	CC-2-AB-045-TWS1 CCW SURGE TANK SUPPORTS WELDED ATTACH. R245 873AB	D-A D1.20	VT-3	1 -	-	-	-	-	-	X	NA	SADDLE. DWG N-2640-359

INSERVICE INSPECTION PLAN

CLASS 3 SCHED/COMPL COMPONENTS

SUMMARY NUMBER	EXAMINATION AREA IDENTIFICATION	ASME SEC. XI CATGY ITEM NO	NDE METH	INSPECTION INTERVAL	PLAN STATUS FIRST PERIOD 1	FIRST PERIOD 2	SECOND PERIOD 1	SECOND PERIOD 2	SECOND PERIOD 3	THIRD PERIOD 1	THIRD PERIOD 2	PRESERVICE YEAR	INSTRUCTIONS **CALIBRATION BLOCK**
	CHEMICAL & VOLUME CONTROL TCX-CSAHLD-01												
952200	CS-2-SB-104-HXS1	F-B	VT-3	1 C	-		-	-	-	-	-	NA	DWG 5665
	LETDOWN HX SUPPORTS	NOTE 1											
	R81 790SB												
952300	CS-2-SB-104-HXWS1	D-A	VT-3	1 C	-		-	-	-	-	-	NA	SADDLE. DWG 5665
	LETDOWN HX SUPPORTS WELDED	D1.20											
	ATTACHMENTS												
	R81 790SB												

4.4 EDDY CURRENT

Eddy current testing (ET) of the steam generator tubes, Examination Category B-Q, Item No. B16.20, shall be accomplished to the extent and frequency defined in Technical Specification Sections; results of the examination shall be evaluated against acceptance criteria contained within this section. The need for corrective action including expanded examination samples shall also be governed by the Technical Specifications, as shall the reporting requirements. All other examination parameters shall be in accordance with ASME Section XI, Appendix IV. These measures will provide compliance with the inspection requirements of Reg. Guide 1.83.

The provisions of Code Case N-401-1 have been adopted to allow recording of eddy current data using digitized collection and storage as an alternative to the requirement of ASME Section XI, Appendix IV for magnetic tape and strip chart recording.

Table 4.4.1 lists tubes plugged by steam generator number and the type of plug installed. The information in this table is cumulative and updated after each refueling outage.

Table 4.4.1
CPSES UNIT 2 STEAM GENERATOR TUBE PLUGGING

Plugged Tubes

	Row/Column	Plug Type
S.G. 1	1/56	M
	10/10	M (NOTE 4)
	10/105	M (NOTE 4)
	24/14	M (NOTE 4)
	24/30	M (NOTE 4)
	24/85	M (NOTE 4)
	24/101	M (NOTE 4)
	30/10	M
	34/96	M
	36/22	W
	36/23	W
	36/92	W
	36/93	W
	37/24	M (NOTE 4)
	37/91	M (NOTE 4)
	40/18	M
	46/82	M
	49/53	M
	49/54	M
S.G. 2	10/10	M (NOTE 4)
	10/105	M (NOTE 4)
	14/67	M
	24/14	M (NOTE 4)
	24/30	M (NOTE 4)
	24/85	M (NOTE 4)
	24/101	M (NOTE 4)
	32/92	M
	34/50	M
	37/24	M (NOTE 4)
	37/51	M
	37/91	M (NOTE 4)
	37/16	M
	38/16	M
	39/17	M (UBS)
	45/24	M (UBS)
S.G. 3	10/10	M (NOTE 4)
	10/105	M (NOTE 4)
	24/14	M (NOTE 4)
	24/30	M (NOTE 4)
	24/85	M (NOTE 4)
	24/101	M (NOTE 4)
	36/23	W
	36/92	W
	36/96	M
	37/24	M (NOTE 4)
	37/91	M (NOTE 4)

Table 4.4.1
CPSES UNIT 2 STEAM GENERATOR TUBE PLUGGING

Plugged Tubes

	Row/Column	Plug Type
S.G. 4	3/54	M
	10/10	M (NOTE 4)
	10/105	M (NOTE 4)
	12/92	M (CLS)
	20/106	M
	24/14	M (NOTE 4)
	24/30	M (NOTE 4)
	24/85	M (NOTE 4)
	24/101	M (NOTE 4)
	25/99	W
	30/102	W
	36/59	M
	37/24	M (NOTE 4)
	37/59	M
	37/91	M (NOTE 4)
	40/63	W
	40/64	W
	41/63	W
	41/64	W
	45/55	M
	45/68	M
	49/84	M (NOTE 5)

NOTE 1: W-welded
M-mechanical
HLS-Hot Leg Stabilized
CLS-Cold Leg Stabilized
UBS-U-Bend Stabilized

NOTE 2: Row 1, Column 1 is over the nozzles

NOTE 3: This list is to be updated after each steam generator plugging activity.

NOTE 4: Mechanical plug installed into a bare hole plug. There is actually no tube present. (Ref. TUE-91-331)

NOTE 5: Plug is installed only in the inlet (hot leg) side of the tube. The outlet (cold leg) has a stabilizer installed. (Ref. DCA 95775 R. 1)

5.0 PRESSURE TESTING

5.1 PURPOSE

This section of the ISI Plan identifies pressure test requirements for ASME Code Class 1, 2, and 3 pressure retaining piping and components at CPSES Unit 2.

This section defines pressure test boundaries, establishes test frequencies, required tests and test pressures and temperature as required by the Code.

5.2 PRESSURE TEST TYPES

5.2.1 System Leakage Test - IWA-5211(a) - Pressure test conducted following the opening and reclosing of a component in the system after pressurization to nominal operating pressure.

5.2.2 System Functional Test - IWA-5211(b) - Pressure test conducted to verify operability in systems (or components) not required to operate during normal plant operation while under system operating pressure.

5.2.3 System Inservice Test - IWA-5211© - Pressure test conducted to perform visual examination VT-2 while the system is in service under operating pressure.

5.2.4 System Hydrostatic Test - IWA-5211(d) - Pressure test conducted during a plant shutdown at a pressure above nominal operating pressure or system pressure for which over pressure protection is provided.

5.2.5 System Pneumatic Test - IWA-5211(e) - Pressure test conducted in lieu of a system hydrostatic pressure test for components within the scope of IWC and IWD.

5.3 REQUIREMENTS

5.3.1 A system pressure test and accompanying VT-2 examination shall be performed in accordance with Articles IWA, IWB, IWC and IWD-5000 and Tables IWA-5210-1, IWB, IWC and IWD-2500-1 of the Code.

5.3.2 The alternative requirements of Code Case N-498-1 are applied for the 10 year hydrostatic pressure of Code Class 1, 2, and 3 systems in lieu of those required by Table IWB-2500-1, Category B-P; IWC-2500-, Category C-H and IWD-2500-1, Categories D-A, D-B and D-C.

5.3.2 Tables have been developed from ASME Section XI Code requirements which identify the following:

(a)	System Test Requirements	-	Ref. Table 1
(b)	Examination Methods	-	Ref. Table 2
©	Test Frequencies	-	Ref. Table 3
(d)	Test Pressure	-	Ref. Table 4
(e)	Test Temperature	-	Ref. Table 5
(f)	Test Holding Times	-	Ref. Table 6
(g)	Test Acceptance Standards	-	Ref. Table 7
(h)	Test Boundaries	-	Ref. Table 8 and Flow Diagrams in Section 2 of this plan.
(I)	Alternate 10 year Test Requirements per Code Case N-498-1	-	Ref. Table 9

SYSTEM TEST REQUIREMENTS

Class 1

(a) The pressure retaining components shall be tested and visually examined by the method specified in Table IWB-2500-1, Examination Category B-P:

(b) The system pressure tests and visual examinations shall be conducted to accordance with IWA-5000 and IWB-5000. Reactor coolant shall be used as the pressurizing medium.

Class 2

(a) The pressure retaining components within each system boundary shall be subjected to the following system pressure tests and visually examined by the method specified in Table IWC-2500-1, Examination Category C-N:

(1) a system pressure test conducted during a system functional test of those systems (or components) not required to operate during normal plant operation but for which periodic system (or component) functional tests are performed to meet the Owner's requirements;
(2) a system pressure test conducted during a system inservice test for those systems required to operate during normal plant operation;
(3) a system hydrostatic pressure test for each system or portions of systems and for repaired or replaced components, or altered portions of systems.

(b) The system pressure tests and visual examinations shall be conducted in accordance with IWA-5000 and IWC-5000. The contained fluid in the system shall serve as the pressurizing medium, except that in steam systems either water or air may be used. Where air is used, the test procedure shall permit the detection and location of through-wall leakages in components of the system tested.

(c) For open ended portions of discharge lines beyond the last shutoff valve in nonclosed systems (e.g., containment spray header), demonstration of an open flow path test shall be performed in lieu of the system hydrostatic test.

Class 3

(a) The pressure retaining components within the boundary of each system specified in the Examination Categories of Table IWD-2500-1 shall be pressure tested and examined in accordance with Table IWD-2500-1 during the following tests:

(1) system inservice test
(2) system functional test
(3) system hydrostatic test

(b) The system hydrostatic test shall be conducted in accordance with IWA-5000, as applicable. The contained fluid in the system shall serve as the pressurizing medium.

(c) For open ended portions of discharge lines beyond the last shutoff valve in nonclosed systems (e.g., service water systems), confirmation of adequate flow during system operation shall be acceptable in lieu of system hydrostatic test.

(d) Open ended vent and drain lines from components extending beyond the last shutoff valve and open ended safety or relief valve discharge lines shall be exempt from hydrostatic test.

EXAMINATION METHOD

Class 1	Class 2	Class 3
(a) The VT-2 visual examination shall be conducted to locate evidence of leakage from pressure retaining components, or abnormal leakage from components with or without leakage collection systems as required during the conduct of system pressure or functional test. (b) The VT-2 visual examination shall be conducted in accordance with IWA-5240.	Same as Class 1	Same as Class 1

TEST FREQUENCY

Type Test	Class 1	Class 2	Class 3
System Leakage Test IWA-5211(a) (4)	Examination Category B-P Each Refueling Outage IWB-5221 (2)	Not Applicable	Not Applicable
System Functional Test IWA-5211(b) (5)	Not Applicable	Examination Categories C-B and C-H Each Inspection Period IWC-5221 (6)	Examination Category D-B Each Inspection Period IWD-5221
System Inservice Test IWA-5211(c) (1)	Not Applicable	Examination Categories C-B and C-H Each Inspection Period IWC-5221 (6)	Examination Categories D-A and D-C Each Inspection Period IWD-5221
System Hydrostatic Test IWA-5211(d)	Examination Category B-E and B-P Each Inspection Interval IWB-5222 (3)	Examination Categories C-B and C-H Each Inspection Interval IWC-5222 (3)	Examination Categories D-A, D-B and D-C Each Inspection Interval IWD-5223 (3)

Notes:
(1) A system hydrostatic test and accompanying VT-2 examination are acceptable in lieu of the system inservice test and VT-2 examination.
(2) The system leakage test shall be conducted prior to plant startup following each reactor refueling outage.
(3) The system hydrostatic test shall be conducted at or near the end of the inspection interval.
(4) A system hydrostatic test and the accompanying VT-2 examination are acceptable in lieu of the system leakage test and VT-2 examination.
(5) A system hydrostatic test and accompanying VT-2 examination are acceptable in lieu of the system functional test and VT-2 examination.
(6) Where portions of a system are subject to system pressure tests associated with two different system functions, the VT-2 examination need only be performed during the test conducted at the higher of the test pressures of the respective system function.

TEST PRESSURES

Class 1

IWB-5221 System Leakage Test

(a) The system leakage test shall be conducted at a test pressure not less than the nominal operating pressure associated with 100% rated reactor power.

(b) The system test pressure and temperature shall be attained at a rate in accordance with the heat-up limitations specified for the system.

IWB-5222 System Hydrostatic Test

(a) The system hydrostatic test may be conducted at any test pressure specified below corresponding to the selected test temperature.

(b) The test pressure shall exceed the limiting conditions specified in the plant Technical Specifications.

(c) The pressure measuring instrument used for measuring system hydrostatic or pneumatic test pressure shall meet the requirements of IWA-5260.

TEST PRESSURE

Test Temperature, °F	Test Pressure,
100 or less	1.10Po
200	1.08Po
300	1.06Po
400	1.04Po
500 or greater	1.02Po

NOTES: (1) Linear interpolation at intermediate test temperatures is permissible.

TEST PRESSURES

Class 2

IWC-5221 System Pressure Test During System Functional & System Inservice Tests

(a) The nominal operating pressure of the system functional test shall be acceptable as the system test pressure. (Ref. 4.3.2)

(b) The nominal operating pressure during system operation shall be acceptable as the test pressure for the system inservice test. (Ref. 4.3.2)

IWC-5222 System Hydrostatic Test

(a) The system hydrostatic test pressure shall be at least 1.10 times the system pressure P_{sv} for systems with Design Temperature of 200°F or less, and at least 1.25 times the system pressure P_{sv} for systems with Design Temperature above 200°F. The system pressure P_{sv} shall be the lowest pressure setting among the number of safety or relief valves provided for overpressure protection within the boundary of the system to be tested. For systems (or portions of systems) not provided with safety or relief valves, the system design pressure P_d shall be substituted for P_{sv}.

(b) In the case of atmospheric storage tanks, the nominal hydrostatic pressure, developed with the tank filled to its design capacity, shall be acceptable as the system test pressure. For 0-15 psi storage tanks, the test pressure shall be 1.1 P_G, Design Pressure of vapor or gas space above liquid level for which overpressure protection is provided by relief valves.

(c) The Pressure measuring instrument used for measuring system hydrostatic or pneumatic test pressure shall meet the requirements of IWA-5260.

Class 3

IWD-5221 System Inservice Test

The inservice operating pressure during system operation shall be acceptable as the system test pressure. (Ref. 4.3.2)

IWD-5222 System Functional Test

The nominal operating pressure during system functional test shall be acceptable as the system test pressure. (Ref. 4.3.2)

IWD-5223 System Hydrostatic Test

(a) The system hydrostatic test pressure shall be at least 1.10 times the system pressure P_{sv} for systems with Design Temperature of 200°F or less, and at least 1.25 times the system pressure P_{sv} for systems with Design Temperature above 200°F. The system pressure P_{sv} shall be the lowest pressure setting among the number of safety or relief valves provided for overpressure protection within the boundary of the system to be tested. For systems (or portions of systems) not provided with safety or relief valves, the system design pressure P_d shall be substituted for P_{sv}.

(b) In the case of atmospheric storage tanks, the nominal hydrostatic pressure, developed with the tank filled to its design capacity, shall be acceptable as the system test pressure. For 0-15 psi storage tanks, the test pressure shall be 1.1 P_G, Design Pressure of vapor or gas space above liquid level for which overpressure protection is provided by relief valves.

(c) The Pressure measuring instrument used for measuring system hydrostatic or pneumatic test pressure shall meet the requirements of IWA-5260.

TEST TEMPERATURES

Class 1	Class 2	Class 3
(a) The minimum test temperature for either the system leakage or system hydrostatic test shall not be lower than the minimum temperature for the associated pressure specified in the plant Technical Specifications.	(a) The system test temperature during a system hydrostatic test in systems containing ferritic steel components shall meet the requirements specified by fracture prevention criteria.	(a) The system test temperature during a system hydrostatic test in systems constructed of ferritic steel components shall satisfy either the requirements of fracture prevention criteria, as applicable, or the test temperature specified in the test procedure.
(b) The system test temperature shall be modified as required by the results obtained from each set of material surveillance specimens withdrawn from the reactor vessel during the service lifetime.	(b) In systems containing ferritic steel components for which fracture toughness requirements were neither specified nor required in the construction of the components, the system test temperature shall be specified in the test procedure.	(b) For tests of systems or portions of systems constructed entirely of austenitic steel, test temperature limitations are not required to meet fracture prevention criteria.
(c) For tests of systems or portions of systems constructed entirely of austenitic steel, test temperature limitations are not required to meet fracture prevention criteria. In cases where the components of the system are constructed of ferritic and austenitic steels that are nonisolable from each other during a system leakage or system hydrostatic test, the test temperature shall be in accordance with (a) above.	(c) No limit on system test temperature is required for systems comprised of components constructed entirely of austenitic steel materials.	

TEST HOLDING TIMES

Class 1	Class 2	Class 3
The holding time after pressurization to test conditions, before the visual examinations commence, shall be as follows: (a) system leakage tests - no holding time required after attaining test pressure and temperature condition; (b) system functional tests - 10 min. holding time required after attaining the system operating pressure; (c) system inservice tests - no holding time required, provided the system has been in operation for at least 4 hr; (d) system hydrostatic tests - 4 hr. holding time required after attaining the test pressure and temperature conditions for insulated systems, and 10 min. for noninsulated systems or components; (e) system pneumatic tests - 10 min. holding time required after attaining the test pressure.	Same as Class 1	Same as Class 1

TEST ACCEPTANCE STANDARDS

Class 1	Class 2	Class 3
Examination Categories B-E and B-P	Examination Category C-B	Examination Categories D-A, D-B and D-C
Visual Examination, VT-2. The following relevant conditions that may be detected during the conduct of system pressure tests shall require evaluation and/or correction to meet the requirements of IWB-3142 and IWA-5250 prior to continued service: (a) leakage from noninsulated components; (b) leakage in excess of permissible levels from components provided with leakage limiting devices; (c) leakage[2] from insulated components or inaccessible components that will require location of leakage source; (d) areas of general corrosion of a component resulting from leakage; (e) leakages or flow test results from buried components in excess of established limits. Note 1: Relevant conditions are defined in IWA-9000; they do not include conditions that result in condensation on components, normal collection of fluids in sumps, and drips from open drains. Note 2: The leakage is the through-wall leakage that penetrates the pressure retaining membrane.	No Leakage Examination Category C-H Same as Class 1	Same as Class 1

TEST BOUNDARIES

Class 1	Class 2	Class 3
Pressure Retaining Boundary	Pressure Retaining Boundary	Pressure Retaining Boundary
See Section 2 Flow Diagrams	See Section 2 Flow Diagrams	See Section 2 Flow Diagrams
(1)(2)(5)	(3)(5)(6)	(4)(5)(6)

NOTES:

(1) The pressure retaining boundary during the system leakage test shall correspond to the reactor coolant system boundary, with all valves in the normal position, which is required for normal reactor operation startup. The VT-2 examination shall, however, extend to and include the second closed valve at the boundary extremity.

(2) The pressure retaining boundary during the system hydrostatic test shall include all Class 1 components within the system boundary.

(3) The pressure retaining boundary includes only those portions of the system required to operate or support the safety system function up to and including the first normally closed valve including a safety or relief valve, or valve capable of automatic closure when the safety function is required.

(4) The system boundary extends up to and including the first normally closed valve or valve capable of automatic closure as required to perform the safety-related system function.

(5) Pressure retaining boundary includes any vents, drains, instrumentation lines or connections off piping or components which are not assigned a specific line number, but are classified as ASME Code Class 1, 2 or 3.

(6) For the purpose of the test, open ended portions of a suction or drain line from a storage tank extending to the first shutoff valve shall be considered as an extension of the storage tank.

ALTERNATE 10-YEAR TEST REQUIREMENTS PER CODE CASE N-498-1

Class 1

(a) As an alternative to the 10-year system hydrostatic test required by Table IWB-2500-1, Category B-P, the following rules shall be used.

(1) A system leakage test (IWB-5221) shall be conducted at or near the end of each inspection interval, prior to reactor startup.

(2) The boundary subject to test pressurization during the system leakage test shall extend to all Class 1 pressure retaining components within the system boundary.

(3) Prior to performing the VT-2 visual examination, the system shall be pressurized to nominal operating pressure for at least 4 hours for insulated systems and 10 minutes for noninsulated systems. The system shall be maintained at nominal operating pressure during performance of the VT-2 visual examination.

(4) Test temperatures and pressures shall not exceed limiting conditions for the hydrostatic test curve as contained in the plant Technical Specifications.

(5) The VT-2 visual examination shall include all components within the boundary identified in (a)(2) above.

(6) Test instrumentation requirements of IWA-5260 are not applicable.

Class 2

(b) As an alternative to the 10-year system hydrostatic test required by Table IWC-2500-1, Category C-H, the following rules shall be used.

(1) A system pressure test shall be conducted at or near the end of each inspection interval or during the same inspection period of each inspection interval of Inspection Program B.

(2) The boundary subject to test pressurization during the system pressure test shall extend to all Class 2 components included in those portions of systems required to operate or support the safety system function up to and including the first normally closed valve, including a safety or relief valve, or valve capable of automatic closure when the safety function is required.

(3) Prior to performing the VT-2 visual examination, the system shall be pressurized to nominal operating pressure for a minimum of 4 hours for insulated systems and 10 minutes for noninsulated systems. The system shall be maintained at nominal operating pressure during performance of the VT-2 visual examination.

(4) The VT-2 visual examination shall include all components within the boundary identified in (b)(2) above.

(5) Test instrumentation requirements of IWA-5260 are not applicable.

Class 3

(c) As an alternative to the 10-year system hydrostatic test required by Table IWD-2500-1, Categories D-A, D-B, or D-C as applicable, the following rules shall be used.

(1) A system pressure test shall be conducted at or near the end of each inspection interval or during the same inspection period of each inspection interval of Inspection Program B.

(2) The boundary subject to test pressurization during the system pressure test shall extend to all Class 3 components included in those portions of systems required to operate or support the safety system function up to and including the first normally closed valve, including a safety or relief valve, or valve capable of automatic closure when the safety function is required.

(3) Prior to performing the VT-2 visual examination, the system shall be pressurized to nominal operating pressure for at least 4 hours for insulated systems and 10 minutes for noninsulated systems. The system shall be maintained at nominal operating pressure during performance of the VT-2 visual examination.

(4) The VT-2 visual examination shall include all components within the boundary identified in (c)(2) above.

(5) Test instrumentation requirements of IWA-5260 are not applicable.

APPENDIX A

APPENDIX A

RELIEF REQUESTS

It is impractical within the limitations of the of the CPSES plant design, geometry and accessibility for TXU Electric to meet certain requirements of Articles IWA, IWB, IWD, and IWF of the Code. Compliance with these requirements would result in hardships or unusual difficulties without a compensating increase in the level of plant quality or safety. Therefore, pursuant to 10CFR50.55a, the relief requested from the Inservice Inspection requirements of 10CFR50.55a is addressed in this appendix. Relief requested for the 120 month interval on the CPSES Inservice Inspection Program.

APPENDIX A
STATUS OF CPSES UNIT 2 ISI PLAN / RELIEF REQUESTS
(UNIT 2: 1986 EDITION OF ASME CODE SECTION XI, NO ADDENDA, INTERVAL START DATE - AUGUST 3, 1993, FIRST INTERVAL)

REVISION / RELIEF REQUEST	SUBJECT	SUBMITTED TO NRC	APPROVAL OR DENIAL ISSUED
Revision 0	Unit 2 ISI Program Plan	TXX-93344, 10/06/93	*
Revision 1	Unit 2 ISI Program Plan	TXX-96117, 04/17/96	*
Revision 2	Unit 2 ISI Program Plan	TXX-97236, 11/3/97	*
Revision 3	Unit 2 ISI Program Plan	TXX-99178, 08/17/99 TXX-00031, 02/01/2000	*
Revision 4	Unit 2 ISI Program Plan	TXX-00168, 08/23/2000 CPSES-200002095	*
Revision 5	Unit 2 ISI Program Plan	TXX-02056, 03/22/2002	*
A-1	Pressure retaining bolted connections (similar to U1 A-1)	TXX-94332, 12/21/94	NRR-9044, 06/16/95 (Approved)
A-2, Rev 1	Insulated bolted connections in systems which are borated for the purpose of controlling reactivity (similar to U1 A-2)	TXX-94332, 12/21/94 Rev 1	NRR-9044, 06/16/95 (Approved Revision 1)
A-3	Allow use of Code Case N-573, transfer of procedure qualification records between owners, Section XI, Division 1	TXX-00104, 06/29/2000 CPSES-200001591	Approved 10/31/2000 MA9406/MA9407
A-3 (number was reused in error)	Allow use of Code Case N-597, Requirements for Analytical Evaluation of Pipe Wall Thinning	TXX-01061, 06/21/2000 CPSES-200001436 TXX-01117 07/11/2001 CPSES-200101585	MB2260 08/23/01 (Approved)
A-4	Invoke Code Case N-613	TXX-01163, TXX-02004	
A-5	Request Relief for performing EVT in lieu of UT for RPV nozzle to shell inner radius exams	TXX-01163, TXX-02004,TXX-02062	
A-6	Request Relief from ASME Section XI, Appendix VIII Supplement 2 and 3	TXX-01163, TXX-02004	
A-7	Relief from IWA-2232 for Category B-A Pressure Retaining Welds	TXX-02004	
A-8	Relief from Section XI, Appendix VIII Supplement 2 and 3 for sixteen Class 1Category B-J and B-F pressure retaining piping welds	TXX-02004	
B-1	Reactor Vessel Closure Head (similar to U1 B-6)	TXX-95042, 03/06/95	NRR-9156, 12/28/95 (Approved)
B-1/ R1	for volumetric examination of 100% of the weld lengths Reactor Vessel Closure Head & Head to Flange and Ring to Disc Welds	TXX-01024, 02/02/2000 CPSES-200000347 TXX-01110 06/22/2001 CPSES-200101469	MB1190 10/11/01 (Approved)
B-2	Circumferential piping welds (similar to U1 B-5)	TXX-95042, 03/06/95	NRR-9156, 12/28/95 (Approved)
B-3	Branch Pipe Connection Weld (similar to U1 B-10)	TXX-96426, 07/23/96	NRR-9731, 02/03/99 (Approved)

APPENDIX A
STATUS OF CPSES UNIT 2 ISI PLAN / RELIEF REQUESTS
(UNIT 2: 1986 EDITION OF ASME CODE SECTION XI, NO ADDENDA, INTERVAL START DATE - AUGUST 3, 1993, FIRST INTERVAL)

REVISION / RELIEF REQUEST	SUBJECT	SUBMITTED TO NRC	APPROVAL OR DENIAL ISSUED
B-4	Pressurizer Lower Head to Shell and Surge Nozzle to Vessel Welds (TCX-1-2100-1,11) (similar to U1 B-9)	TXX-98058, 03/05/98	NRR-9731, 02/03/99 (Approved)
B-5	Steam Generator tubesheet-to-channel head weld (TCX-1-3100-2-1) (similar to U1 B-7)	TXX-98058, 03/05/98	NRR-9731, 02/03/99 (Approved)
B-5/ R1	volumetric examination of 100% of the steam generator tubesheet-to-channel head weld	TXX-01024, 02/02/2000 CPSES-200000347 TXX-01110 06/22/2001 CPSES-200101469	MB1190 10/11/01 (Approved)
B-6	Circumferential Piping Weld (TCX-1-4201-7) (similar to U1 B-11)	TXX-98058, 03/05/98	NRR-9731, 02/03/99 (Approved)
C-1	Excess letdown heat exchanger head to flange weld (similar to U1 C-2)	TXX-95042, 03/06/95	NRR-9156, 12/28/95 (Approved)
C-2	Regenerative Heat Exchanger Shell to Tubesheet Welds (TCX-2-1150-5,6)	TXX-98058, 03/05/98	NRR-9731, 02/03/99 (Approved)
C-3	Item for which relief is requested (TCX-2-2301-H1)	TXX-98058, 03/05/98	NRR-9731, 02/03/99 (Approved)
C-4	Containment Spray Heat Exchanger Shell to Flange Weld (TCX-2-1180-1-2)	TXX-99175, 07/16/99	NRR-9828, 09/24/99 (Approved)
C-5	volumetric examination of 100% of the weld length TCX-2-2577-12 pipe to valve, TCX-2-2577-20 pipe to valve, TCX-2-2578-35 pipe to nozzle	TXX-01024, 02/02/2000 CPSES-200000347 TXX-01110 06/22/2001 CPSES-200101469 TXX-01132 08/02/2001 CPSES 200101761	MB1190 10/11/01 (Approved)
D-1	visual examination of 100% of the weld length as described in Table IWD-2500-1, Examination Category D-A , Item No. D1.20.	TXX-00087, 04/19/2000 TXX-00151, 08/10/2000 CPSES-200001960	Approved 10/16/2000
E-1	Metallic containment shell and penetration liners and their integral attachments	TXX-98041, 02/20/98 CPSES-9803922, 08/05/98 TXX-99082, 03/26/99 TXX-99130, 06/08/99 TXX-99152, 06/15/99	Under NRC Review (Originally requested approval by 06/30/98, per subsequent phone call CPSES requested approval by June 1999) NRR-9800, 07/23/99 (Approved)
E-2	visual examination of 100% of the containment surface areas as described in Table IWE-2500-1, Examination Category E-A, Item No. E1.11 of the 1998 Edition of ASME Section XI, Subsection IWE per CPSES Relief Request E-1	TXX-00087, 04/19/2000 TXX-00151, 08/10/2000 CPSES-200001960	Approved 10/16/2000
L-1	Concrete Containment Components	TXX-98041, 02/20/98 CPSES-9803922, 08/05/98 TXX-99082, 03/26/99 TXX-99130, 06/08/99	Under NRC Review (Originally requested approval by 06/30/98, per subsequent phone call

APPENDIX A
STATUS OF CPSES UNIT 2 ISI PLAN / RELIEF REQUESTS
(UNIT 2: 1986 EDITION OF ASME CODE SECTION XI, NO ADDENDA, INTERVAL START DATE - AUGUST 3, 1993, FIRST INTERVAL)

REVISION / RELIEF REQUEST	SUBJECT	SUBMITTED TO NRC	APPROVAL OR DENIAL ISSUED
		TXX-99152, 06/15/99	CPSES requested approval by June 1999) NRR-9800, 07/23/99 (Approved)

* Transmitted to the NRC, no formal NRR approval expected or issued.

** Certain inspection requirements of Section XI of the ASME are impractical and relief was requested in accordance with the requirements of 10CFR50.55a(g)(5)(iii). The request was consistent with the guidelines of NUREG-1482. This relief request has been implemented pending NRC approval.

General Notes:

A) A revision to the ISI Plan is usually issued after the completion of each refueling outage and prior to the next successive refueling outage. Interim Change Requests (ICRs) and ISI Plan revisions include items such as rescheduled exams and updated drawings. A request for relief from the ASME Code is requested separate from ICRs and Plan revisions; however, copies of relief requests are included in ICRs and Plan revisions for the purpose of administrative updates to the ISI Plan. A relief request is assigned a unique identifier which consists of a letter representing the Code Subsection followed by a sequential number (e.g., B-6 is assigned to the sixth request for relief from a requirement of Subsection IWB).

B) Copies of the ISI Program Plan Provisions and Interim Change Requests are forwarded to the 1) NRC Document Control Desk, 2) NRC Region IV, 3) NRC Resident Inspectors, 4) NRR Project Manager, and 5) Texas Department of Licensing and Regulation (TDLR) G. Bynog.

Specific Notes:

1) TXX-94154 dated May 31, 1994, transmitted Interim Change Request Number 1 to the ISI Program Plan Revision 0. NRR-8884 dated November 9, 1994, transmitted a Request for Additional Information on ICR-2R0-001 (Response required by 01/16/95).

2) TXX-94337 dated December 21, 1994, transmitted Interim Change Request Number 2, 3, 4, and 5 to the ISI Program Plan Revision 0.

3) TXX-95002 dated January 17, 1995, transmitted response to Request for Additional Information on Interim Change Request Number 1 to the ISI Program Plan Revision 0.

4) TXX-96116 dated April 16, 1996, transmitted Interim Change Request Number 6 to the ISI Program Plan Revision 0.

5) TXX-96118 dated April 18, 1996, transmitted Interim Change Request Number 1 to the ISI Program Plan Revision 1.

6) TXX-96448 dated August 23, 1996, transmitted Interim Change Request Numbers 2 and 3 to the ISI Program Plan Revision 1.

7) TXX-98060 dated March 5, 1998, transmitted Interim Change Request Number 1 to the ISI Program Plan Revision 2.

8) TXX-99179 dated November 17, 1999, transmitted Interim Change Request Number 1 to the ISI Program Plan Revision 3.

9) TXX-00031 dated February 1, 2000, transmitted Interim Change Request Number 2 to the ISI Program Plan Revision 3.

APPENDIX B

APPENDIX B

INDEX

ISI PLAN INTERIM CHANGE REQUESTS (ICRs)

ICR NO.	AFFECTED PAGE(S)	DESCRIPTION OF CHANGE
	Section 4.2 pg. 1 of 1	Replaced page for rescheduled exam
ISI-2R0-01	Section 4.1, 4.2 & 4.3 pg's. 39, 40, 78, 88, 120, 319 327, 333, 392, 394, 396, 397, 398, 400, 403, 407, 461 & 462	Replaced pages for rescheduled exams and corrected pipe support info.
	Section 4.2 and 4.3 pg's. 120.1, 260.1, 327.1, 390.1, 390.2, 390.3, 391.1, 401.1, 403.1, 403.2, 403.3, 403.4, 404.1 and 458.1	Added pages to plan
	Section 2 dwg. #'s AF Sh. 5; CC Sh. 1, 2 and 10; CS Sh. 1 thru 13; CT Sh. 3 and 4; MS Sh. 2 and RH Sh. 2	Replaced drawings
	Section 2 dwg. #'s CS Sh. 14 and 15	Deleted drawings
	Section 5 Table 9	Replaced table
ISI-2R0-02	Section 2 dwg. #'s CT Sh. 1 and 2, CS Sh. 11	Replaced drawings
	Appendix A pg. 2 Relief Request A-1, A-2	Replaced Index Page Added Relief Request
ISI-2R0-03	Appendix A pg. 2 Relief Request A-2 Rev. 1	Replaced Index Page Added Revised Relief Request
ISI-2R0-04	Section 5, Table 9	Add reference to Notes 5, 6, 7 and 8 on pages 32, 118, 135 and 100 respectively and add notes 5, 6, 7 and 8 to the note page
ISI-2R0-05	Section 4.1, 4.2 and 4.3 pg's. 1, 6, 7, 26, 40, 76, 76.1, 76.2, 83, 83.1, 291, 297	Replaced or added pages for added, deleted or rescheduled exam items
	Appendix C pg. 1	Replaced page to incorporate Code Case N-416-1
	Appendix E pg's. 1-4	Updated drawing revisions
ISI-2R0-06	Section 2 dwg. #'s CT S. 1 & 2, CC Sh. 1-9, PS Sh. 1, RC Sh. 1 & 2	Replaced Drawings
	Section 5, Table 9	Replaced Table

ICR NO.	AFFECTED PAGE(S)	DESCRIPTION OF CHANGE
ISI-2R1-01	Section 2.0 RHR dwg., Sh. 1 & 2 Section 5.0 Table 9 page 115	Incorporate DM 94-45
ISI-2R1-02	Section 4.1 pg's 6, 37, 40, 43, 46 52, 61, 69, 70, 71, 74 Section 4.2 pg. 119 App. A pg. 2 App. B pg. 2	Change cal blocks, reschedule exams add Relief Request
ISI-2R1-03	Section 2 CS dwg. Sh. 12 of 13 Section 5, Table 9 pg's 25, 31 and notes App. B pg. 2	Replace pages
ISI-2R2-01	Section 4.1, 4.2 and 4.3 pages 35, 42, 51, 61, 69, 76, 172, 199, 200, 201, 212, 213, 225, 226, 229, 230, 237, 238; App. A pg. 2, RR's B-4, 5, 6, C-2, 3; App. B pg 2; App. E pg 3	Change cal blocks, reschedule exams, add relief requests, update sketch rev. #'s
ISI-2R3-01	Section 4.2 and 4.3 pages 82, 212, 214, 215, 216, 217, 226 Section 4.4 page 1	Change cal blocks, reschedule exams, add relief request, corrected Cat and Item no.'s
ISI-2R3-02	Section 4.4 page 1 Section 4.4 Table 4.4.1	Incorporate steam generator tube plugging table. Delete reference and paragraph on NRC Bulletin 85-02.

APPENDIX C

APPENDIX C
ADOPTED CODE CASES

CODE CASE	SUBJECT	NRC APPROVAL DOCUMENT
N-401-1	Eddy Current Examination	R.G. 1.147 Rev. 10
N-416-1	Alternative Pressure Test Requirement for Welded Repairs or Installation of Replacement Items by Welding	NRC Letter 11/04/94

Note: Implementation of Code Case N-416-1 on Code Class 3 components requires an additional surface examination (MT/PT) to be performed on the root pass of butt and socket welds on the pressure retaining boundary of Code Class components.

N-435-1	Alternative Examination Requirements for Vessels with Wall Thickness 2 inches or less	R.G. 1.147 Rev. 10
N-457	Qualification Specimen Notch Location for Ultrasonic Examination of Bolts and Studs	R.G. 1.147 Rev. 10
N-460	Alternative Examination Coverage for Class 1 and Class 2 Welds	R.G. 1.147 Rev. 10
N-461	Alternative Rules for Piping Calibration Block Thickness	R.G. 1.147 Rev. 10

Note: Code Case N-461 is acceptable subject of the following condition in addition to those conditions specified in the Code Case: Thickness measurements and weld joint contour of the pipe/component must be known and used by the inspector who conducts the UT examination.

N-491	Alternative Rules for Examination of Class 1, 2, 3 and MC Component Supports of Light-Water Cooled Power Plants	R.G. 1.147 Rev. 10
N-498-1	Alternative Rules for 10-Year Hydrostatic Pressure Testing for Class 1, 2 and 3 Systems	R.G. 1.147 Rev. 12
N-522	Pressure Testing of Containment Isolation Piping	R.G. 1.147 Rev. 12

Note: Code Case N-522 is acceptable subject of the following condition in addition to those conditions specified in the Code Case: The test should be conducted at the peak calculated containment pressure and the test procedure should permit the detection of through-wall leakage in containment isolation valves (CIV's) and pipe segments between the CIV's.

N-524	Alternative Requirements for Longitudinal Welds in Class 1 and 2 Piping	NRC Letter 2/23/96
N-573	Transfer of Procedure Qualification Records Between Owners, Section XI, Division 1	NRC Letter 10/31/2000
N-597	Requirements for Analytical Evaluation of Pipe wall Thinning	Nrc Letter 8/13/01

APPENDIX D

APPENDIX D

ULTRASONIC CALIBRATION BLOCKS

Calibration Block No.	Block Size Pipe Schedule	Material	System/ Component
TBX-1	12.25"L x 6.00"W x 3.50"T	SA-533 Gr. B Class-1 C.S.	Pressurizer
TBX-2	8.00"L x 3.00"W x 3.00"T	A351 CF8M	Reactor Coolant Pipe (1982)
TBX-3	3" sch. 160	A376 Type-316	Piping
TBX-4	4" sch. 160	A376 Type-304	Control Rod Drive Mech. Housings
TBX-5	6" sch. 160	A376 Type-304	Piping
TBX-6	6" sc. 40S	A376 Type-304	Piping
TBX-7	8" sch. 40S	A376 Type-304	Letdown Reheat H.X.
TBX-8	8" sch. 140	A376 Type-316	Excess Letdown Heat Exchanger
TBX-9	10" sch. 140	A376 Type-304	Regenerative Heat Exchanger
TBX-10	10" sch. 40S	A312 Type-316	Piping
TBX-11	12" sch. 40S	A312 Type-316	Piping
TBX-12	12" sch. 140	A376 Type-304	Piping
TBX-13	14" sch. 140	A376 Type-316	Piping
TBX-14	14" sch. 40	A358 Type-316	Piping
TBX-15	16" sch. 40S	A312 Type-304	Piping
TBX-16	9.00"L x 4.00"W x .468"T	A240 Type-304	Seal Water Heat Exchanger
TBX-17	8" sch. 80	A106 Grade-B C.S.	Piping
TBX-18	8" sch. 160	A312 Type-304	Piping
TBX-19	14" sch. 160	A312 Type-304	Piping
TBX-20	16" sch. 80	A106 Grade-B C.S.	Piping
TBX-21	18" sch. 80	A106 Grade-B C.S.	Piping
TBX-22	24" sch. 80	A106 Grade-B C.S.	Piping

APPENDIX D

ULTRASONIC CALIBRATION BLOCKS

Calibration Block No.	Block Size Pipe Schedule	Material	System/ Component
TBX-23	1.50 sch. 160	A376 Type-316	Piping
TBX-24	2" sch. 160	A376 Type-316	Piping
TBX-25	7" Lg. Stud	SA-540 C.S.	R.V. Stud & R.C. Pump Bolting (1982)
TBX-26	22.10"L x 6.00"W x 6.30"T	SA-533 Grade-A Class-1 C.S.	Reactor Vessel Bottom Head
TBX-27	20.8"L x 6.00"W x 4.00"T	SA-533 Grade-A Class-1 C.S.	Steam Generator Secondary Side
TBX-28	19.10"L x 6.00"W x 5.45"T	SA-508 Grade-A Class-2 C.S.	Steam Generator Channel Head to Tubesheet
TBX-29	30.10"L x 6.00"W x 8.60"T	SA-533 Grade-A Class-1 C.S.	Reactor Vessel Closure Head
TBX-30	13.00"L x 4.00"W x 1.00"T	SA-240 Type-304	Residual Heat Exchanger
TBX-31	9.00"L x 4.00"W x .625"T	SA-240 Type-304	Horizontal Letdown Heat Exchanger
TBX-32	9.00"L x 4.00"W x .312"T	SA-240 Type-304	Volume Control Tank
TBX-33	32' x 1.25"T	SA-106 Grade-B C.S.	32" Main Steam
TBX-34	6" sch. 120	SA-333 Grade-6 C.S.	Piping
TBX-35	6" sch. 80	SA-333 Grade-6 C.S.	Piping
TBX-36	6" sch. 160	SA-106 Grade-B C.S.	Piping
TBX-37	8" sch. 160	SA-106 Grade-B C.S.	Piping
TBX-38	18" sch. 140	SA-106 Grade-B C.S.	Piping
TBX-39	24" sch. 100	SA-106 Grade-B C.S.	Piping
TBX-40	13.00"L x 4.00"W x 1.502"T	SA-515-74B Grade-70	Pressurizer Skirt Weld
TBX-41	12' sch. 30	SA-106 Grade-B C.S.	R.C. Drain Tank Heat Exchanger
TBX-42	8" sch. 40S	SA-333 Grade-7 C.S.	Excess Letdown Heat Exchanger
TBX-43	12" sch. 20	A-312 Type-304	R.C. Drain Tank Heat Exchanger

APPENDIX D

ULTRASONIC CALIBRATION BLOCKS

Calibration Block No.	Block Size Pipe Schedule	Material	System/ Component
TBX-44	3" sch. 80	SA-312 Type-304	Piping
TBX-45	4" sch. 80	SA-312 Type-304	Piping
TBX-46	14" sch. 40	SA-312 Type-304	Piping
TBX-47	14" x .500"T	SA-312 Type-304	Piping
TBX-48	16" sch. 30	SA-312 Type-304	Piping
TBX-49	18" x .375"T	SA-312 Type-304	Piping
TBX-50	24" sch. 20	SA-312 Type-304	Piping
TBX-51	12" sch. 80	SA-312 Type-304	Piping
TBX-52	24"L x 6.812" dia.	SA-540 Gr. B24	RPV Stud (1993)
TBX-53	9.25L x 2.125" dia.	SA-193 Gr. B7	SI Pump Stud
TBX-54	35"L x 4.5" dia.	SA-540 Gr. B24	RC Pump Stud (1993)
TBX-55	5.5" x 4.5" x 5.8"	SA-508 Cl. 2	Pr Spr Nozzle IR
TBX-56	11" x 4.5" x 9.93"	SA-508 Cl. 2	SG FW Nozzle IR
TBX-57	12" x 12" x 2.7"	A-351 Gr. CF8M	Reactor Coolant Pipe (1993)
TBX-58	7-1/2" x 7" x 8"	SA-508 Cl. 2	Pr Surge Nozzle IR
TBX-59	7" x 7" x 7"	SA-508 Cl. 2	Pr Sfty/Rlf Nozzle IR
TBX-RV-1	45.00" x 11.00"W x 11.00"T	SA-533 Gr. B Cl. 1	Basic 11" RPV Block
TBX-RV-2	36.00"L x 9.00"W x 9.00"T	SA-533 Gr. B Cl. 1	Basic 9" RPV Block
TBX-RV-3	28.00"L x 6.00"W x 7.00"T	SA-533 Gr. B Cl. 1	Basic 7" RPV Block
TBX-RV-4	20.00"L x 6.00"W x 5.00"T	SA-533 Gr. B Cl. 1	Basic 5" RPV Block
TBX-RV-5	33.00"L x 11.00"W x 11.00"T	SA-533 Gr. B Cl. 1	RPV Flange Ligament
TBX-RV-6	10.00"L x 6.00"W x 3.00"T	SA-503 Cl. 2	RPV Safe End
TBX-RV-7	41.50"L x 7.00"W x 15.25"T	ASTM A508 Cl. 2	RPV Shell

APPENDIX D

ULTRASONIC CALIBRATION BLOCKS

Calibration Block No.	Block Size Pipe Schedule	Material	System/ Component
TCX-RV-1	45.00"L x 11.00"W x 11.00"T	SA-533 Gr. B. Cl. 1	Basic 11" RPV Block
TCX-RV-2	36.00"L x 9.00"W x 9.00"T	SA-533 Gr. B Cl. 1	Basic 9" RPV Block
TCX-RV-3	28.00"L x 6.00"W x 7.00"T	SA-533 Gr. B Cl. 1	Basic 7" RPV Block
TCX-RV-4	20.00"L x 6.00"W x 5.00"T	SA-533 Gr. B Cl. 1	Basic 5" RPV Block
TCX-RV-5	33.00"L x 11.00"W x 11.00"T	SA-533 Gr. B Cl. 1	RPV Flange Ligament
TCX-RV-6	10.00"L x 6.00"W x 3.00"T	SA-503 Cl. 2	RPV Safe End
SS-CB-1	½"T to 3"T x 3"W step	SA-312 Type 304	Stainless Steel Alt Block
CS-CB-1	½"T to 3"T x 3"W step	SA-516 Gr. 70	Carbon Steel Alt Block
DM-CB-1	9"L x 4"W x 2"T	SA-312/SA-516 Block	Dissimilar Metal Alt
PDI-01	14.00"L x 2.00"W x 14.00"T	A-508 Cl. 2	RPV Block

APPENDIX E

APPENDIX E

TCX ISOMETRIC DRAWINGS TABLE

TCX #	REV #
TCX-1-1100	2
TCX-1-1100A	2
TCX-1-1200 Sh. 1	1
TCX-1-1200 Sh. 2	1
TCX-1-1300	1
TCX-1-1300A	1
TCX-1-1400	2
TCX-1-2100	1
TCX-1-3100	1
TCX-1-4100	1
TCX-1-4101	1
TCX-1-4102	3
TCX-1-4103	3
TCX-1-4104	1
TCX-1-4105	1
TCX-1-4106	1
TCX-1-4107	2
TCX-1-4108	2
TCX-1-4109	1
TCX-1-4110	1
TCX-1-4200	1
TCX-1-4201	3
TCX-1-4202	4
TCX-1-4203	3
TCX-1-4204	1
TCX-1-4205	2
TCX-1-4206	1
TCX-1-4207	1
TCX-1-4300	1
TCX-1-4301	2
TCX-1-4302	2
TCX-1-4303	4
TCX-1-4304	1
TCX-1-4305	1

APPENDIX E

TCX ISOMETRIC DRAWINGS TABLE

TCX #	REV #
TCX-1-4306	1
TCX-1-4307	1
TCX-1-4308	1
TCX-1-4400	1
TCX-1-4401	1
TCX-1-4402	2
TCX-1-4403	2
TCX-1-4404	2
TCX-1-4405	1
TCX-1-4406	1
TCX-1-4407	2
TCX-1-4408	1
TCX-1-4409	1
TCX-1-4500	2
TCX-1-4501	1
TCX-1-4502	1
TCX-1-4503	1
TCX-1-4504	1
TCX-1-4505	4
TCX-1-4506	4
TCX-1-4507	2
TCX-1-4600	2
TCX-1-5100	1
TCX-1-5100A	1
TCX-2-1100	1
TCX-2-1110	1
TCX-2-1120	1
TCX-2-1130	1
TCX-2-1140	1
TCX-2-1150	1
TCX-2-1180	2
TCX-2-2100	3
TCX-2-2101	2
TCX-2-2102	2
TCX-2-2103	1

APPENDIX E

TCX ISOMETRIC DRAWINGS TABLE

TCX #	REV #
TCX-2-2200	3
TCX-2-2201	2
TCX-2-2202	1
TCX-2-2203	3
TCX-2-2204	2
TCX-2-2300	3
TCX-2-2301	2
TCX-2-2302	3
TCX-2-2303	3
TCX-2-2400	3
TCX-2-2401	2
TCX-2-2402	2
TCX-2-2403	2
TCX-2-2500	3
TCX-2-2501	3
TCX-2-2520	2
TCX-2-2521	1
TCX-2-2530	2
TCX-2-2531	1
TCX-2-2532	1
TCX-2-2533	2
TCX-2-2534	2
TCX-2-2535	2
TCX-2-2536	2
TCX-2-2537	1
TCX-2-2538	1
TCX-2-2538A	1
TCX-2-2539	1
TCX-2-2539A	1
TCX-2-2540	2
TCX-2-2541	2
TCX-2-2542	1
TCX-2-2550	1
TCX-2-2551	1

APPENDIX E

TCX ISOMETRIC DRAWINGS TABLE

TCX #	REV #
TCX-2-2560	3
TCX-2-2561	2
TCX-2-2562	2
TCX-2-2563	1
TCX-2-2564	1
TCX-2-2565	1
TCX-2-2566	2
TCX-2-2566A	1
TCX-2-2567	1
TCX-2-2568	1
TCX-2-2569	1
TCX-2-2570	1
TCX-2-2571	1
TCX-2-2572	1
TCX-2-2573	1
TCX-2-2574	1
TCX-2-2575	2
TCX-2-2576	2
TCX-2-2577	2
TCX-2-2578	2
TCX-2-2579	2
TCX-2-2580	2
TCX-2-2581	2
TCX-2-2582	2
TCX-2-2583	2
TCX-2-2584	1
TCX-2-2585	1
TCX-2-2586	1
TCX-2-3100	1
TCX-2-3110	1
TCX-2-3140	1

APPENDIX F

APPENDIX F

RECORD OF REVISIONS

Revision 0 - original issue

Revision 1

- Incorporated ICR No's. ISI-R0-01, 02, 03, 04, 05 and 06.
- Revised section 1.0 page 2 of 5 to identify the applicable Code inspection schedule program.
- Revised section 2.0 page 1 of 1 to clarify ISI drawing preparation and approval process.
- Updated section 4.0, the ISI summary, for completed and scheduled examination totals.
- Revised sections 4.1, 4.2 and 4.3, the ISI examination tables, for editorial changes, and to reflect completed, rescheduled, added, deleted and corrected examination items resulting from outage plan implementation. These completed, rescheduled, added, deleted and corrected examination items maintain ISI plan compliance with Code Inspection Schedule and Examination Requirements of subarticles IWB, C, D-2400 and 2500 respectively. The summary numbers affected by this revision are listed in Attachment 1 to Appendix F of this plan.
- Revised section 4.3, the Component Support examination table, and Appendix C, the List of Adopted Code Cases, to reflect incorporation of Code Case N-491, "Alternative Rules for Examination of Class 1, 2, 3 and MC Component Supports of Light-Water Coded Power Plants". The summary numbers affected by this change are not listed in Attachment 1 to Appendix F of this plan.
- Revised section 5.0, the Pressure Test portion of the plan to update examination tables.
- Updated Appendix A to reflect the current status of relief requests and to add relief requests resulting from the first outage implementation.
- Updated Appendix C to reflect the current list of adopted Code Cases.
- Updated Appendix D to reflect the current list of calibration blocks.
- Updated Appendix E to reflect the current list of ISI sketches.
- Updated Appendix F to add record of revision and corresponding Attachment 1 to Appendix F for Plan revision 1.

APPENDIX F

RECORD OF REVISIONS

Revision 2

- Incorporated ICR No's. ISI-2R1-01, 02 and 03
- Revised cover page to identify current corporate address..
- Retyped text portion of plan due to a word processing software change resulting in the movement of some information and paragraphs to different pages.
- Revised section 1.0 to clarify exemptions and to correct paragraph numbers.
- Revised section 2.0 ISI Boundary Diagrams: AF sheets 1, 2, 3 and 4 of 5 per AF system exemption clarification; CH sheets 1 and 3 of 7 per DM 92-07; and CS sheet 6 of 13 per DCN 11008. Revised all other Boundary Diagrams for clarity or to add revision and approval blocks.
- Updated section 4.0, the ISI summary, for completed and scheduled examination percentages totals.
- Revised sections 4.1, 4.2 and 4.3, the ISI examination tables, to reflect completed, rescheduled, added, deleted and corrected examination items resulting from outage plan implementation and component design verification. These completed, rescheduled, added, deleted and corrected examination items maintain ISI plan compliance with Code Inspection Schedule and Examination Requirements of subarticles IWB, C, D-2400 and 2500 respectively. The summary numbers affected by this revision are listed in Attachment 2 to Appendix F of this plan.
- Revised section 4.3, the Component Support examination table, based on a Class 3 component support design review and on an N-F boundary reconciliation. The summary numbers affected by these changes are listed in Attachment 2 to Appendix F of this plan.
- Revised section 5.0, the Pressure Test portion of the plan to update examination tables.
- Updated Appendix A to reflect the current status of relief requests.
- Updated Appendix C to reflect the current list of adopted Code Cases.
- Updated Appendix D to reflect the current list of calibration blocks.
- Updated Appendix E to reflect the current list of ISI sketches.
- Updated Appendix F to add record of revision and corresponding Attachment 2 to Appendix F for Plan revision 2.

APPENDIX F

RECORD OF REVISIONS

Revision 3

- Incorporated ICR No. ISI-2R2-01
- Revised section 1.0 page 1 to indicate that the examinations required by subsections IWE and IWL of the Code are not within the scope of this plan.
- Revised section 2.0 ISI Boundary Diagrams: AF Sh. 1 of 5 per DCN 11248; CC Sh. 1 of 9 per DCN 11262, Sh. 9 of 9 per M2-0231 Sh. A; DD Sh. 1 and 2 of 2 per DCN 9905; FW Sh.3 and 4 of 4 per DCN 10174; MS Sh. 1, 2, 3, 4 and 5 of 5 per DM 95-05 and DCN 11070; RH Sh. 1 and 2 of 2 per DCN 09634.
- Revised section 3.0 page 1 to correct typographical errors in the identification of visual examination methods.
- Updated section 4.0, the ISI summary, for completed and scheduled examination percentages totals.
- Revised sections 4.1, 4.2 and 4.3, the ISI examination tables, to reflect completed, rescheduled, and corrected examination items resulting from outage plan implementation. These completed, rescheduled, and corrected examination items maintain ISI plan compliance with Code Inspection Schedule and Examination Requirements of subarticles IWB, C, D-2400 and 2500 respectively. The summary numbers affected by this revision are listed in Attachment 3 to Appendix F of this plan.
- Revised sections 4.1, 4.2 and 4.3, the ISI examination tables, to reflect 3 outages in the second period of the first inspection interval. This change results in a 4-1/2 year second period and maintains compliance with Code Inspection Program B which requires a 4 year second period that may be decreased or extended by as much as 1 year to enable inspections to coincide with a plant outage. The summary numbers affected by this change are listed in Attachment 3 to Appendix F of this plan.
- Updated Appendix A to reflect the current status of relief requests.
- Updated Appendix E to reflect the current list of ISI sketches.
- Updated Appendix F to add record of revision and corresponding Attachment 3 to Appendix F for Plan revision 3.

APPENDIX F

RECORD OF REVISIONS

Revision 4

- Incorporated ICR No. ISI-2R3-01 and 2R3-02
- Revised cover page to identify this Plan as the 1'st 10-Year Interval Plan.
- Updated section 4.0, the ISI summary, for completed and scheduled examination percentages totals.
- Revised sections 4.1, 4.2 and 4.3, the ISI examination tables, to reflect completed, rescheduled, added, removed and corrected examination items resulting from outage plan implementation. These completed, rescheduled, added, removed and corrected examination items maintain ISI plan compliance with Code Inspection Schedule and Examination Requirements of subarticles IWB, C, D-2400 and 2500 respectively. The summary numbers affected by this revision are listed in Attachment 4 to Appendix F of this Plan.
- Revised section 4.1 to reflect reactor vessel nozzle examination items that are being re-examined in the third period of the first interval to support second interval reactor vessel examination schedules. The summary numbers affected by this revision are listed in attachment 4 to Appendix F of this Plan.
- Updated Appendix A to reflect the current status of relief requests.
- Updated Appendix C to reflect the current list of NRC approved adopted Code Cases.
- Updated Appendix F to add record of revision and corresponding Attachment 4 to Appendix F for Plan revision 4.

APPENDIX F

RECORD OF REVISIONS

Revision 5

- Revised section 1.4, Scope, to reflect the risk-informed inspection (RI-ISI) for selected piping welds that has been approved by the NRC for use during the first 10-year interval for Unit 2.

- Added a paragraph under VT-1 in section 3.1.1 explaining the definition of enhanced visual examination (EVT).

- Revised sections 4.1, 4.2, and 4.3, the ISI examination tables, to reflect completed, rescheduled, added, removed, and corrected examination items resulting from implementation of the outage plan, expedited implementation of Appendix VIII of ASME Section XI Code as executed by the Performance Demonstrative Initiative (PDI), and implementation RI-ISI for selected piping welds (category B-F, B-J, C-F-1, C-F-2). These completed, rescheduled, added, removed, and corrected examination items maintain ISI plan compliance with Code Inspection Schedule and Examination Requirements of subarticles IWB, C, D-2400 and 2500, respectively. RI-ISI program changes for selected piping welds follow Attachment 1 to TXX-01026. Use of the PDI is mandated by 10CFR50.55a. The summary numbers affected by this revision are listed in Attachment 5 to Appendix F of this Plan.

- Updated Table 4.4.1 to reflect the latest information regarding the tubes plugged and types of plugs installed for the Steam Generators.

- Revised section 5 to expound on the use of Code Case N-498-1 and eliminated the ASME Section XI Test Line List and information relative to the List.

- Updated Appendix A to reflect the current status of relief requests.

- Updated Appendix C to reflect the current list of NRC approved, adopted Code Cases.

- Updated Appendix D to reflect the latest list of ultrasonic calibration blocks.

- Updated Appendix F to add the record of revision and corresponding Attachment 5 to Appendix for Plan revision 5.

Revision 1 - AFFECTED SUMMARY NUMBERS

The following summary numbers identify examination items completed during the first refueling outage:

002800	008020	057000	608200
003100	008040	094244	608400
003200	008060	094279	608450
003600	008080	094300	608500
005400	008100	094400	608600
005420	008140	094800	608700
005440	008200	094900	608800
005460	014400	095300	608900
005480	014500	096400	609000
005500	014900	100300	609100
005520	015000	102700	609200
005540	015500	109900	609300
005560	017200	110900	609500
005580	017500	132200	609600
005600	017600	132300	610000
005620	018500	166500	610100
005640	018600	166550	610200
005660	018700	166600	618500
005680	019400	166650	618775
005700	020200	166700	618800
005720	020300	166750	618900
005740	020400	183800	619000
006600	020900	184000	619100
006620	021000	184500	619200
006640	021100	186400	619300
006660	022400	186500	622800
006680	022700	190800	622900
006700	023000	191000	631100
006720	023100	191300	631200
006740	025300	245500	631300
006760	025400	245600	631400
006780	025500	245800	631900
006800	025600	246300	632000
006820	025700	250900	632100
006840	025800	251000	632200
006880	025900	251100	632300
006900	026000	251400	632400
006920	026100	251500	632500
006940	026200	255600	632600
007800	026300	500700	632700
007820	027550	600000	632800
007840	048500	603600	632900
007860	048600	603700	633000
007880	048700	603800	635200
007900	048800	603900	635300
007920	048900	604000	635400
007940	049000	604100	635500
007960	049100	605400	635600
007980	049800	605500	635700
008000	049900	605600	635800

Revision 2 - AFFECTED SUMMARY NUMBERS

Completed examinations (cont.):

640530	695960	714550	723500
640540	695970	714600	723600
640550	696000	716490	723700
640560	696100	716500	723800
640570	696200	716550	723900
640580	696300	718200	724000
640830	696400	718300	725000
653400	696500	718400	725100
653500	696600	718500	725200
653600	696690	718550	725300
653700	696700	718600	725400
653800	696750	718700	725500
653900	696590	718800	725600
655400	696800	718900	725700
655690	696900	718910	725800
655700	696950	719000	725900
655800	696980	719100	726000
655900	696990	719200	726100
656000	697000	719300	726200
669200	697010	719400	750000
669300	706900	719500	750100
669310	707000	719600	750200
669400	707020	719650	750300
669450	709190	719700	750400
669500	709200	719710	750500
669600	709300	719800	750600
669650	709400	719900	750700
669700	709500	719950	810000
669710	709600	720000	810100
669800	710860	720010	810200
669900	710870	720100	810300
670900	710880	720200	810400
671000	713100	720300	810500
671300	713200	720400	810550
671310	713290	721200	810600
671900	713300	721260	810700
672000	713400	721800	810800
672200	713450	721900	810900
672400	713500	722000	811000
673600	713550	722100	811100
673610	713600	722200	811200
683200	713700	722300	811300
683210	713800	722400	811400
683300	713850	722500	811500
683400	713900	722600	811600
683450	714000	722700	811700
683500	714050	722800	811800
683600	714100	722900	811850
683610	714150	723000	813200
683700	714200	723100	813300
683800	714300	723200	813400
687500	714400	723300	813500
687600	714500	723400	813600

Revision 2 - AFFECTED SUMMARY NUMBERS

Completed examinations (cont.):

898450	899000	899800	900550
898500	899100	899900	900600
898550	899200	900100	900700
898600	899300	900200	900800
898650	899350	900250	900900
898700	899400	900300	901000
898750	899500	900350	952200
898800	899600	900400	952300
898900	899700	900500	

The following summary numbers identify examination items that have been rescheduled:

003300	008120	094221
003400	018800	094261

The following summary numbers identify examination items that have been added to the schedule:

094280	094282	106100	500700

The following summary numbers identify examination items that have been deleted from the schedule:

094233	097440	104800
094271	097445	500100

The following summary numbers identify examination items that have been corrected:

186400	186500	721760

Revision 2 - AFFECTED SUMMARY NUMBERS

The following summary numbers identify examination items that have been completed:

000100	076800	501000	715350
001900	077700	620300	721700
001910	077750	620350	721750
002200	077800	620400	721760
002210	077900	620500	
002300	078800	620600	
002310	078850	623200	
002600	078900	623250	
002610	079000	623400	
002700	085800	623500	
009100	085900	640410	
009300	086000	640420	
009600	086100	640430	
009650	094249	640440	
009700	094282	640450	
009750	122400	640460	
009800	122800	640470	
009850	123400	640710	
009900	124500	640720	
009950	124600	640730	
010000	124800	640740	
010050	125300	640750	
010100	126100	640760	
012200	126700	640770	
012300	127000	640780	
015600	192200	640790	
015700	192300	640800	
016000	192700	640810	
016100	192800	640900	
016300	192900	693500	
016400	193000	693550	
017100	194100	693560	
018800	194200	693600	
024200	194500	697040	
024400	194600	697060	
024500	195900	697100	
024600	196300	697400	
024700	196400	697450	
024800	196500	697700	
024900	196600	697750	
027600	300700	697800	
027700	300750	697850	
040900	300800	698400	
041000	300850	698500	
059200	300900	698550	
059300	300950	699590	
075600	301600	699600	
075700	301650	699650	
076600	301700	715200	
076650	301750	715250	
076700	314000	715300	

Revision 2 - AFFECTED SUMMARY NUMBERS

The following summary numbers identify examination items that have been rescheduled:

003100	024300	139100	892900
003200	075400	139700	892950
003300	075500	141000	893600
009000	094261	314000	893650
009200	130300	892000	893800
009400	131000	892050	893850
009500	132000	892200	
009550	138600	892250	

The following summary numbers identify examination items that have been added to the schedule:

013400	042100	094236	612600
028800	060400	094274	613000

The following summary numbers identify examination items that have been deleted from the schedule:

041400	041600	094245	095200
041500	041700	094280	613300
			613400

The following summary numbers identify examination items that have been corrected:

060500	688900	689650	815550
600300	689400	689800	902500
688700	689600	815500	934000

The following summary numbers identify longitudinal weld examination items that have been removed from the plan by incorporation of Code Case N-524:

145050	166750	292450	301750
146250	205750	292550	303950
146550	205850	292650	304050
147550	205950	292850	304350
159350	206050	293050	304450
159450	206150	295450	304850
159750	278050	205550	304950
159850	279750	295650	307150
164150	279850	296350	307250
164250	279950	296450	307350
164350	289350	296550	311550
164450	289450	300750	311650
164550	292150	300850	312050
166050	292250	300950	312150
166550	292350	301650	312250
166650			

Revision 2 - AFFECTED SUMMARY NUMBERS

The following summary numbers identify component support examination items that have been removed from the plan based on a design specification N-F boundary reconciliation:

600800	676200	828300	909800
601100	677390	828400	909850
601400	677510	828450	910100
602700	678610	828500	910150
603400	679410	828550	910200
604000	679800	828600	910250
607500	681800	828650	910300
608450	682000	844000	910350
618500	682600	844050	910400
618600	683610	844800	910450
622250	688510	844850	911200
623975	688980	845500	911250
624500	693560	845550	911300
624600	696950	847600	911350
624800	697040	847650	911400
624900	697060	849700	911450
625200	698670	849900	911500
625400	698680	849950	911550
625500	698690	851400	911600
625700	698700	851600	911650
625800	698900	854800	911700
625900	699590	855400	911750
626100	704400	855450	911800
626200	707020	859200	911850
626500	709290	859900	911900
626700	716490	863000	911950
655320	718910	865100	912100
655590	719710	865250	912150
656000	720010	865400	912500
657410	721760	872700	912550
657620	721800	883900	912600
665610	722000	884300	912650
665790	722600	907700	912700
665810	810200	908940	912750
665820	810300	908950	913200
667410	810400	909000	916000
667490	811300	909050	916400
667560	812200	909100	919600
668210	816900	909150	919800
668610	817000	909200	925600
669310	817200	909250	936000
669170	817300	909300	936050
670210	817400	909350	942100
670220	819600	909400	942150
673450	819800	909450	943100
673610	819900	909500	943900
674210	825700	909550	946900
674300	826100	909600	948100
674600	828100	909650	948900
675690			

Revision 3 - AFFECTED SUMMARY NUMBERS

The following summary numbers identify examination items that have been completed:

002800	008480	075400	629200
005760	008500	075500	640160
005780	009000	096700	640170
005800	009200	096800	640190
005820	009400	096900	640200
005840	009500	097000	640210
005860	009550	097100	640220
005880	010700	097200	640230
005900	010800	113500	640240
005920	010900	113900	640250
005940	011000	114300	640260
005960	011100	114600	640270
005980	024300	115400	640280
006000	027900	115500	640650
006020	028000	121700	640660
006040	030100	121800	640670
006060	030200	138600	640680
006080	030900	139100	640690
006100	031000	139700	640700
006960	031400	141000	640840
006980	031500	233400	640870
007000	032200	233500	665900
007020	032300	233800	665950
007040	032400	234200	666000
007060	032500	234400	666050
007080	032600	234600	666400
007100	032700	234700	666450
007120	032800	234800	666700
007140	032900	237400	666750
007160	033000	237500	666900
007180	033100	237600	666950
007200	033200	237700	667400
007220	033210	238000	667500
007240	033220	239100	667550
007260	033700	239200	667600
007280	033800	600400	667800
007300	034000	615000	667900
008120	034200	615050	667950
008160	034300	616500	668000
008180	034400	616600	668100
008220	034500	616700	668150
008240	035600	616800	668200
008260	035700	617100	668400
008280	035800	620800	668500
008300	039400	620850	668600
008320	039500	620900	668700
008340	039600	621000	668800
008360	040000	622100	668850
008380	040100	622150	668900
008440	040200	622200	669000
008420	040300	628100	669100
008440	040400	628400	669150
008460	040850	629100	675300

Revision 3 - AFFECTED SUMMARY NUMBERS

The following summary numbers identify examination items that have been completed: (cont.)

675600	707900	826150	910650
675650	707950	827600	910900
681850	708000	829400	910950
681900	708050	829500	915800
681950	708500	829550	915900
682050	708550	871600	916100
684400	718100	871650	916200
684500	718150	872900	917200
684550	721300	876200	917250
687300	751700	876250	918600
687400	753000	876700	918650
702500	820400	876750	920600
703800	820700	877100	924500
703850	820800	877150	924550
704450	821800	877200	943900
707500	821850	877250	943950
707550	825750	910600	945000
			945050
			951400

Revision 3 - AFFECTED SUMMARY NUMBERS

The following summary numbers identify examination items that have been rescheduled:

022350	831700	872250	903850
039250	831750	872900	919700
059150	836500	876000	919750
094236	836550	876050	921600
094274	872000	902500	921650
684450	872050	902550	950800
820900	872100	903100	950900
822700	872150	903150	951000
822750	872200	903800	

The following summary numbers identify examination items that have been corrected:

010800
010900
075500

Revision 3 - AFFECTED SUMMARY NUMBERS

The following summary numbers identify examination items that have been affected by changing from 2 outages to 3 outages in the second inspection period:

002700	292300	658300	685500
003100	292400	658350	685550
003200	292500	658800	685600
003300	292600	658850	685650
011200	292800	659400	752000
011300	293000	659600	752100
011400	295400	659700	752200
011500	295500	659750	752700
011600	295600	662200	820900
041200	295600	664640	822700
041300	296300	664670	822750
041800	296400	665000	831700
041900	296500	665050	831750
042600	502400	672100	836500
043400	614000	672500	836550
043500	614200	672600	876000
044200	640290	672700	876050
059150	640300	672800	880700
094221	640310	672900	880750
094236	640320	673000	881000
094274	640330	673050	888300
101700	640340	673100	894700
101800	640350	673200	894750
106100	640360	673300	894900
107100	640370	673400	895600
107400	640380	673500	895650
107500	640390	673600	895700
205700	640400	676600	895750
205800	656500	681100	912800
205900	656550	681200	912850
206000	656800	681300	912900
206100	656850	681400	913600
278000	656900	681500	913650
279700	657000	681600	919700
279800	657100	684450	919750
279900	657200	685100	921600
289300	657300	685200	921650
289400	657400	685250	950800
292100	657500	685400	950900
292200	657900	685450	951000

Revision 4 - AFFECTED SUMMARY NUMBERS

The following summary numbers identify examination items that have been completed:

022350	097420	678600	883400
039250	097430	678700	883450
044300	097444	678800	883600
044700	097450	678840	883650
044800	097460	678845	886300
044900	501200	678850	891200
045500	621200	678900	891250
045600	622400	679000	891600
045700	622450	682100	891650
045800	627800	682200	894000
045900	676900	682250	894050
046000	677000	682300	894100
046100	677050	682350	894150
046200	677100	682400	896600
046300	677200	682500	896650
046400	677300	682650	896700
046500	677400	872000	896750
047000	677500	872050	896900
047100	677600	872100	896950
047300	677700	872150	897200
047500	677800	872200	897250
047600	677900	882900	902500
047700	678000	882950	902550
047800	678100	883000	907750
097410	678500	883050	908100
			908150

The following summary numbers identify examination items that have been rescheduled:

041800	101700	205900	292300
041900	101800	206000	292400
042600	106100	206100	292500
043400	107100	278000	292600
043500	107400	279700	295400
044200	107500	279800	295500
094221	205700	279900	295600
096500	205800		
096600			

The following summary numbers identify examination items that have been added to the schedule:

094245	159000	859400	812460
094281	159100	859450	812470
158900	159200		

The following summary numbers identify examination items that have been removed from the schedule:

094236	094274	831700	831750
876000	876050		

Revision 4 - AFFECTED SUMMARY NUMBERS

The following summary numbers identify examination items that have been corrected:

096500	096600

The following summary numbers identify examination items that are being re-examined in support of second interval reactor examinations:

001900	002300	012200	040900
001910	002310	012300	041000
002200	002600	027600	059200
002210	002610	027700	059300

Revision 5 - AFFECTED SUMMARY NUMBERS

The following summary numbers identify examination items that have been completed.

002700	640120	673000	859450
003100	640130	673050	879800
003200	640140	673100	879850
003300	640150	673200	880200
010200	656500	673300	880250
010300	656550	673400	880700
010400	656800	673500	880750
010500	656850	673600	881000
010600	656900	676600	885100
012500	657000	681100	885150
012600	657100	681200	885400
059150	657200	681300	885450
092480	657300	681400	887000
096500	657400	681500	887050
096600	657500	681600	888300
289300	657900	684450	894700
289400	658300	685100	894750
292100	658350	685200	894900
292200	658800	685250	895600
292800	658850	685400	895650
293000	659400	685450	895700
296300	659600	685500	895750
296400	659700	685550	903100
296500	659750	685600	903150
502400	662200	685650	903800
614000	664640	752000	903850
614200	664670	752100	912800
640040	665000	752200	912850
640050	665050	752700	912900
640060	672100	820900	913600
640070	672500	822700	913650
640080	672600	822750	919700
640090	672700	836500	919750
640100	672800	836550	921600
640110	672900	859400	921650

Revision 5 - AFFECTED SUMMARY NUMBERS

The following summary numbers identify examination items that have been rescheduled.

000100	002805	007420	012200
000200	003100	007440	012300
000300	003200	007460	012500
000400	003400	007480	012600
000500	003500	007500	013400
000600	003700	007520	013500
000700	003800	007540	027600
000800	003900	007560	027600
000900	004000	007580	027700
001000	005150	007600	028800
001100	005200	007620	028900
001200	005250	007640	042100
001300	005250	007760	042200
001400	005300	008520	059200
001500	006120	008540	059300
001600	006140	008560	060400
001700	006160	008580	060500
001800	006180	008600	094500
001850	006200	008620	094600
001900	006240	008640	094700
001910	006260	008660	095000
002000	006280	008680	095100
002100	006300	008700	640290
002110	006320	008720	640300
002200	006340	008740	640310
002210	006360	008760	640320
002300	006380	008780	640330
002310	006400	008880	640340
002400	006420	008820	640360
002410	006440	008840	640370
002410	006460	008860	640380
002500	007320	011200	640390
002600	007340	011300	640400
002610	007360	011400	950800
002700	007380	011500	950900
002800	007400	011600	951000

Revision 5 - AFFECTED SUMMARY NUMBERS

The following summary numbers identify examinations that have been removed from the schedule.

041200	067800	107400	261400
041300	067900	107500	261500
041800	068000	130300	261800
042600	068300	131000	261900
043400	068400	132000	262000
043500	069300	138400	262100
044200	069400	138500	269600
050800	069500	145000	269700
050900	070000	146200	269900
051000	070100	146500	270000
051500	070200	147500	270200
051600	071800	147700	270800
051700	071900	149000	270900
059500	072000	149100	271800
059600	072100	149200	271900
061900	072200	154400	272100
062000	075000	154500	278000
062500	075510	154800	279700
062900	079800	155200	279800
063000	079900	156900	279900
063100	080000	158900	292300
063200	080600	159000	292400
063300	081400	159100	292500
064000	081500	159200	292600
064100	081600	159300	295400
064200	083300	159400	295500
064300	083400	159700	295600
065400	084900	159800	304000
965500	085100	164100	304300
065600	085200	164200	304400
065700	085300	164300	304800
065800	086600	164400	304900
065900	086700	164500	307100
066000	087100	165800	307200
066100	087200	166000	307300
066200	090100	205700	311500
066300	101700	205800	311600
066900	101800	205900	312000
067200	106100	206000	312100
067500	107100	206100	312200

Revision 5 - AFFECTED SUMMARY NUMBERS

The following summary numbers identify examination items that have been added to the schedule.

014600	076500	090900	162900
014800	083700	091400	165700
015900	083900	091600	166900
028300	084600	091700	167000
029800	084700	158500	172800
029900	085400	158600	183900
030000	090500	160900	188300
041600	090600	162000	188400
076400	090700	162800	305800

The following summary numbers identify examination items that have been corrected:

892000	890250

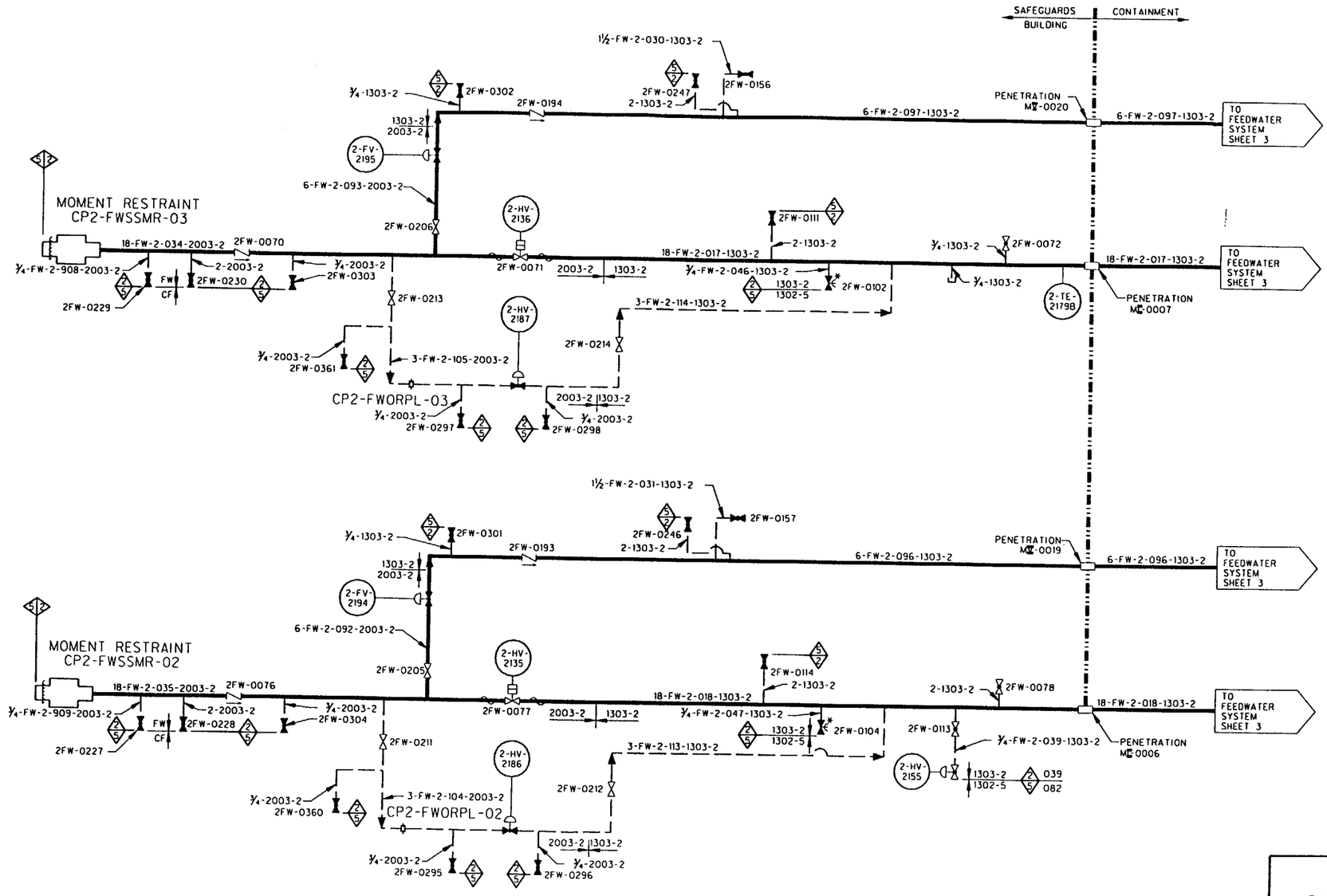

ILLUSTRATIVE USE ONLY

THIS DIAGRAM DEVELOPED FROM FLOW DIAGRAM M2-0203 SH 01

TU ELECTRIC
CPSES UNIT 2

INSERVICE INSPECTION BOUNDARY DIAGRAM

STEAM GENERATOR FEEDWATER SYSTEM
SHEET 1 OF 4

REV 1	APPROVED: SIGNED COPY ON FILE

EFW203011.ISI

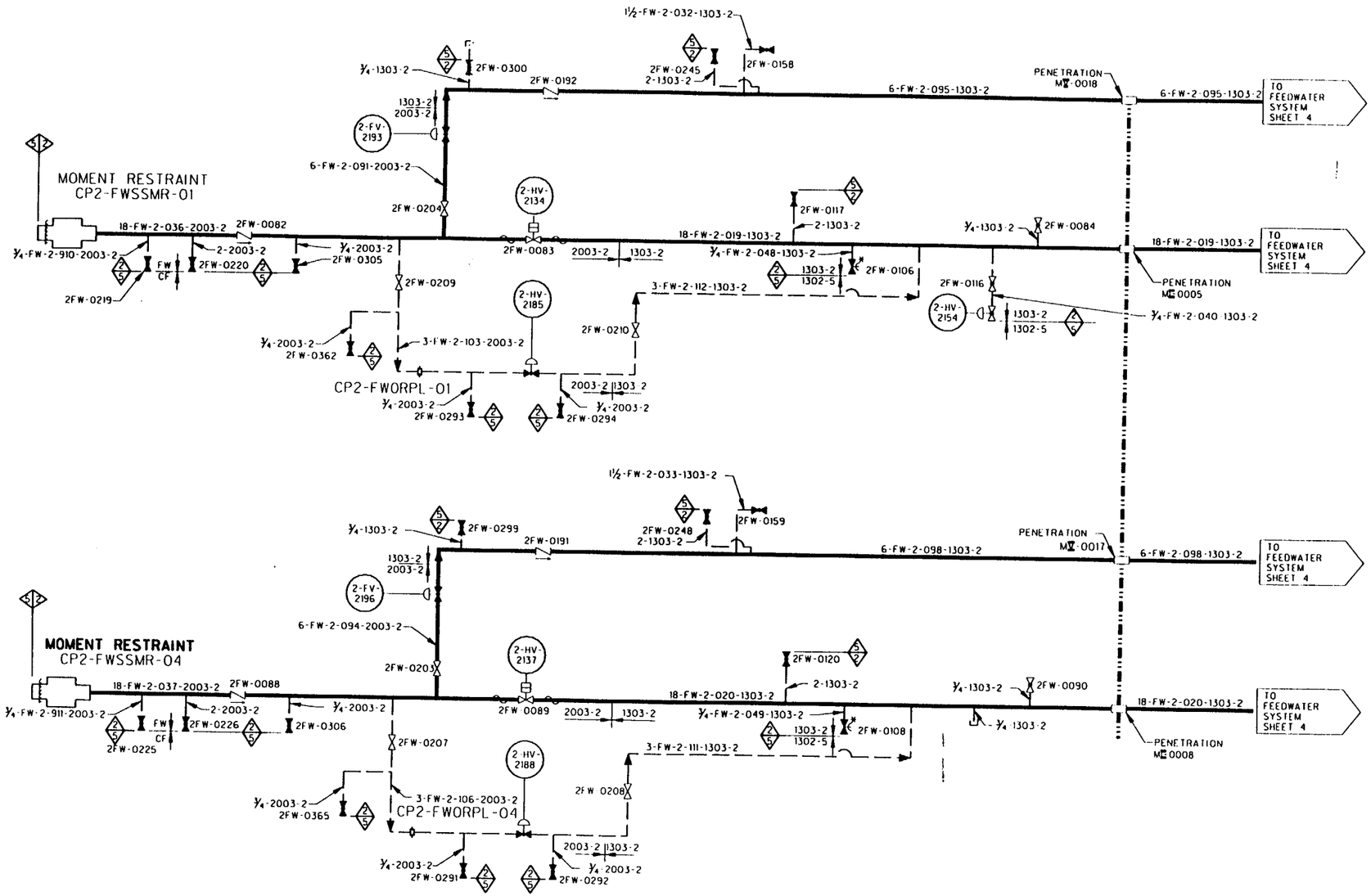

ILLUSTRATIVE USE ONLY

THIS DIAGRAM DEVELOPED FROM FLOW DIAGRAM M2 0203 SH 01

TU ELECTRIC
CPSES UNIT 2

INSERVICE INSPECTION BOUNDARY DIAGRAM

STEAM GENERATOR FEEDWATER SYSTEM
SHEET 2 OF 4

REV 1 | APPROVED: SIGNED COPY ON FILE

EFW203021JSI

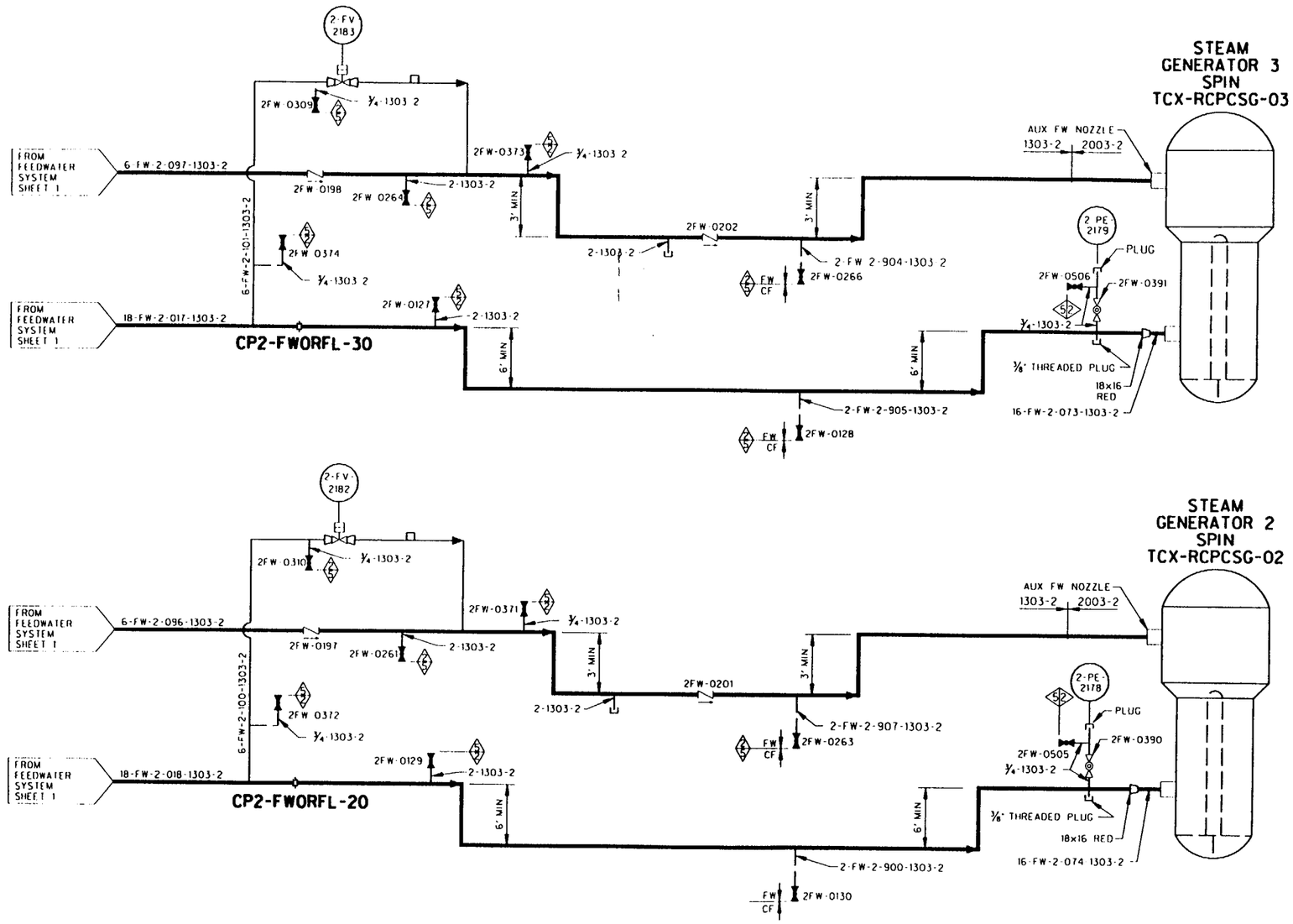

ILLUSTRATIVE USE ONLY

THIS DIAGRAM DEVELOPED FROM FLOW DIAGRAM M2-0203 SH 01A

TU ELECTRIC
CPSES UNIT 2

INSERVICE INSPECTION BOUNDARY DIAGRAM

STEAM GENERATOR FEEDWATER SYSTEM
SHEET 3 OF 4

REV 2	APPROVED: SIGNED COPY ON FILE

EFW203031.JSI

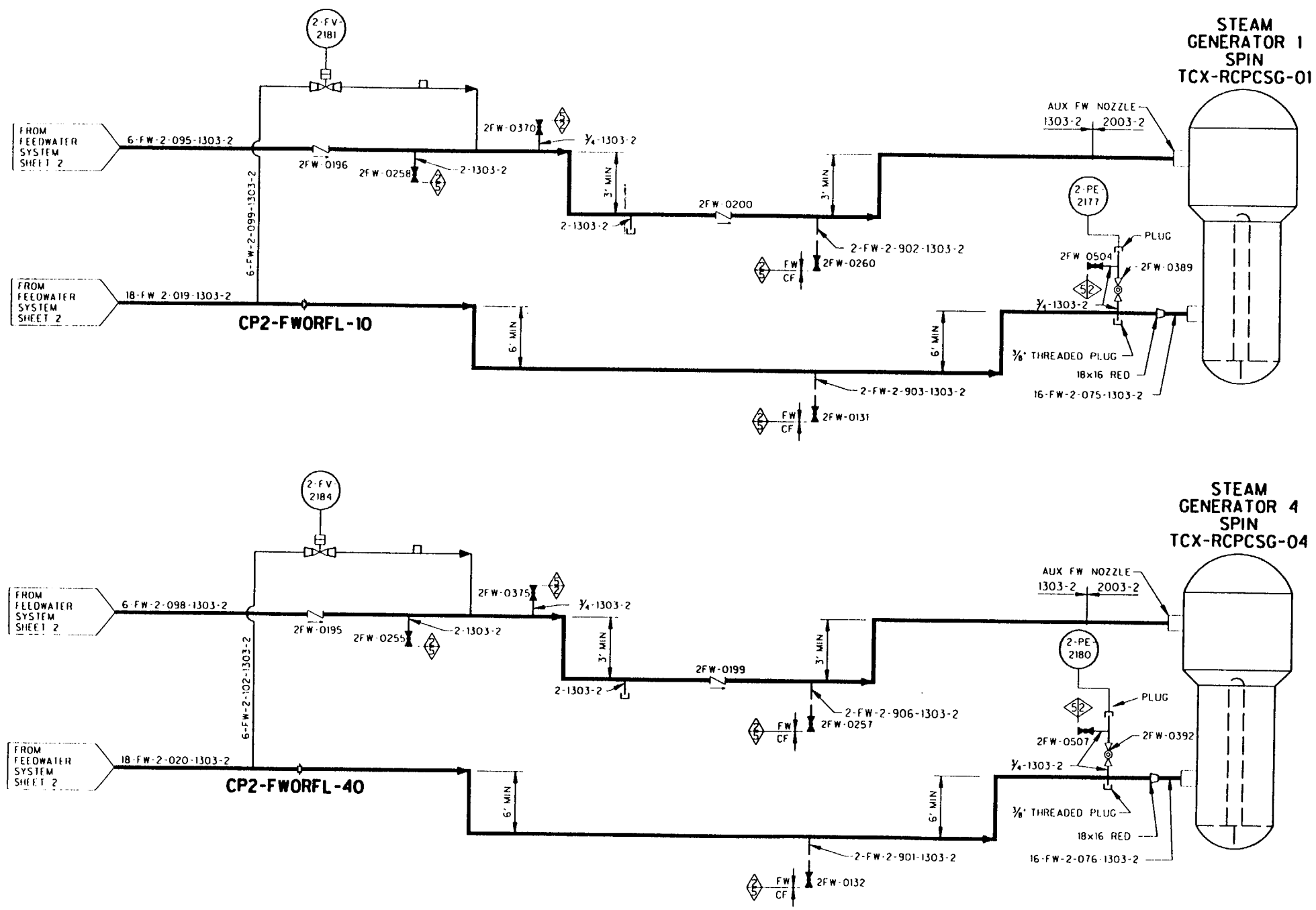

ILLUSTRATIVE USE ONLY

THIS DIAGRAM DEVELOPED FROM FLOW DIAGRAM M2-0203 SH 01A

TU ELECTRIC
CPSES UNIT 2

INSERVICE INSPECTION BOUNDARY DIAGRAM

STEAM GENERATOR FEEDWATER SYSTEM
SHEET 4 OF 4

REV 2	APPROVED: SIGNED COPY ON FILE

EFW203041.ISI

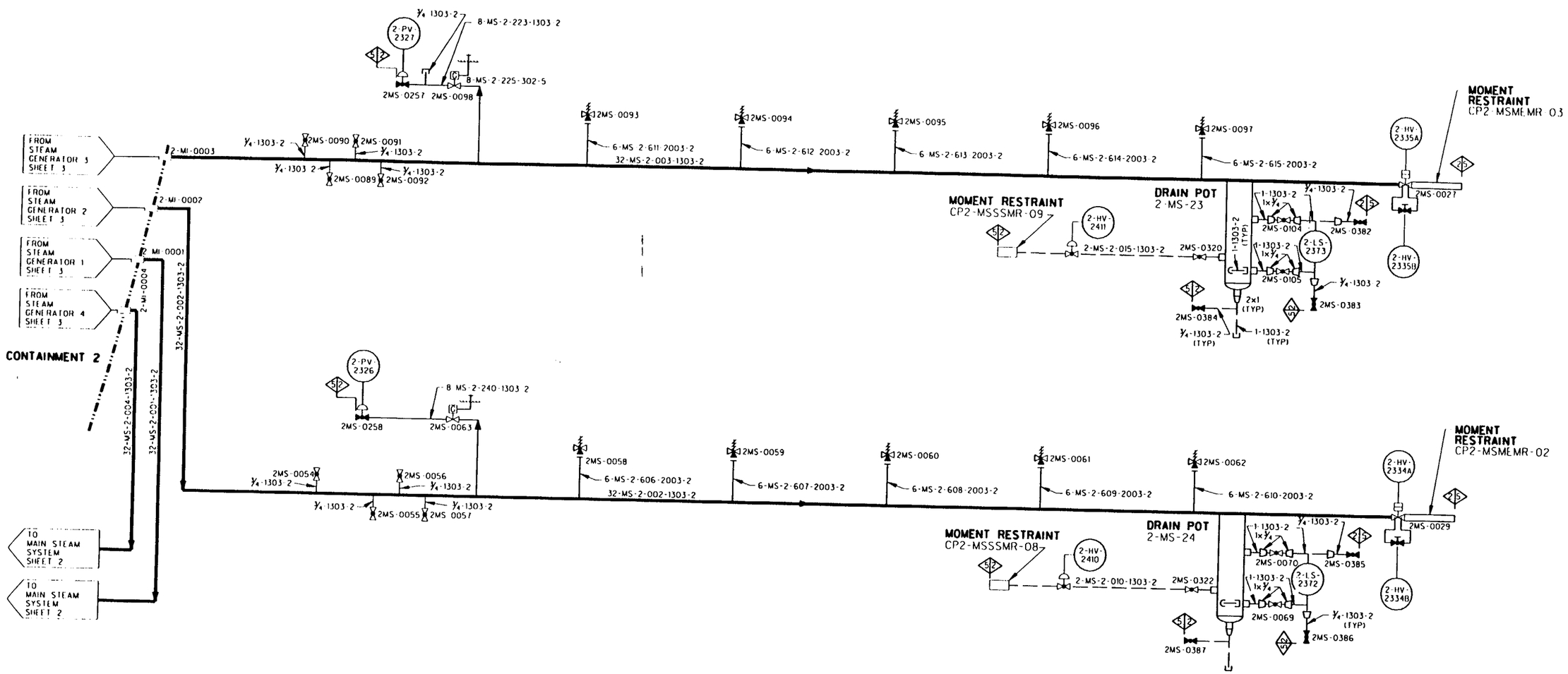

EMS202011.151

ILLUSTRATIVE USE ONLY

THIS DIAGRAM DEVELOPED FROM FLOW DIAGRAM M2-0202

TU ELECTRIC
CPSES UNIT 2

INSERVICE INSPECTION BOUNDARY DIAGRAM

MAIN STEAM SYSTEM
SHEET 1 OF 5

REV 2	APPROVED: SIGNED COPY ON FILE

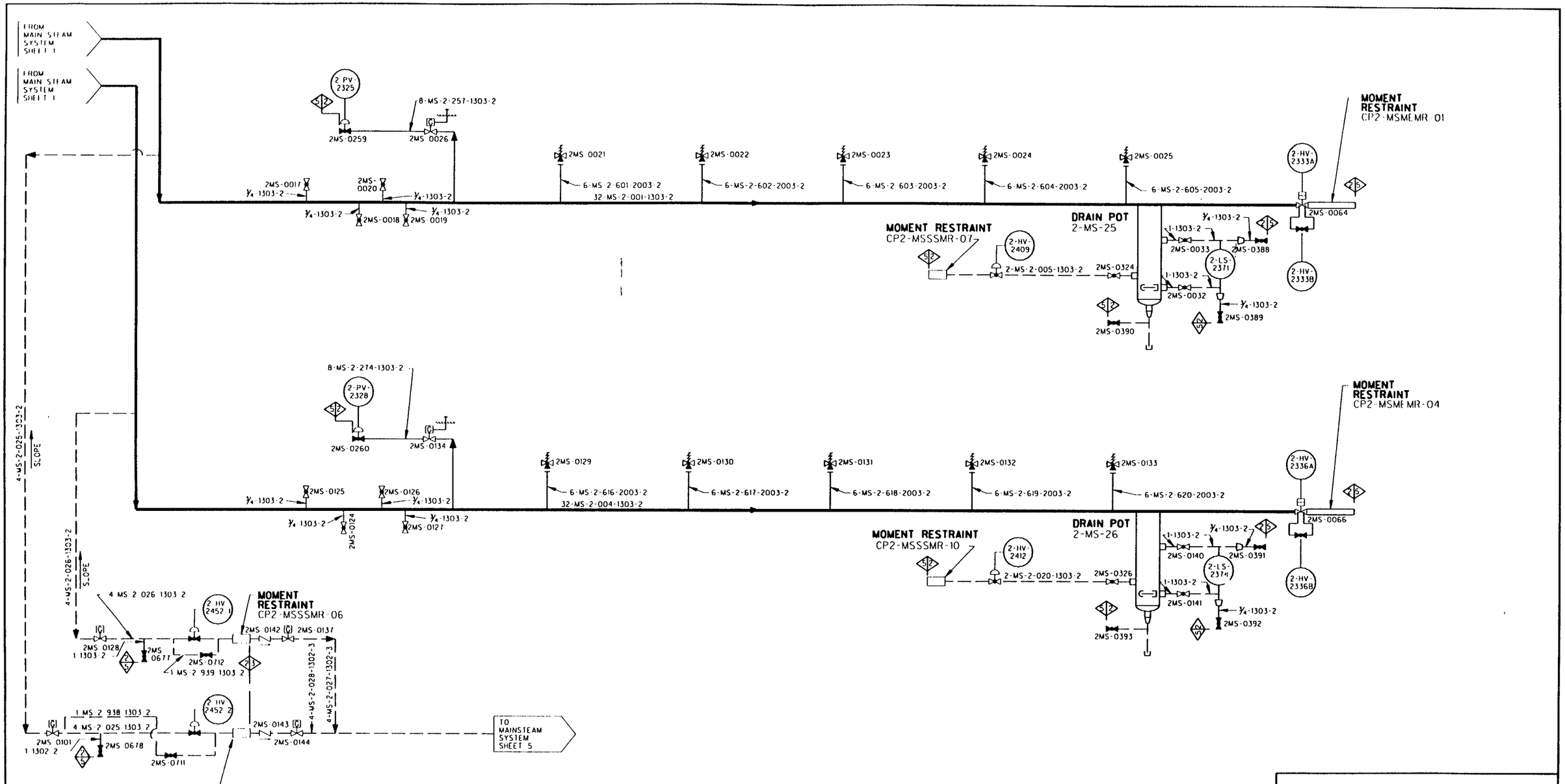

ILLUSTRATIVE USE ONLY

THIS DIAGRAM DEVELOPED FROM FLOW DIAGRAM M2-0202

TU ELECTRIC
CPSES UNIT 2

INSERVICE INSPECTION BOUNDARY DIAGRAM

MAIN STEAM SYSTEM
SHEET 2 OF 5

REV 3	APPROVED: SIGNED COPY ON FILE

EMS202021.1S1

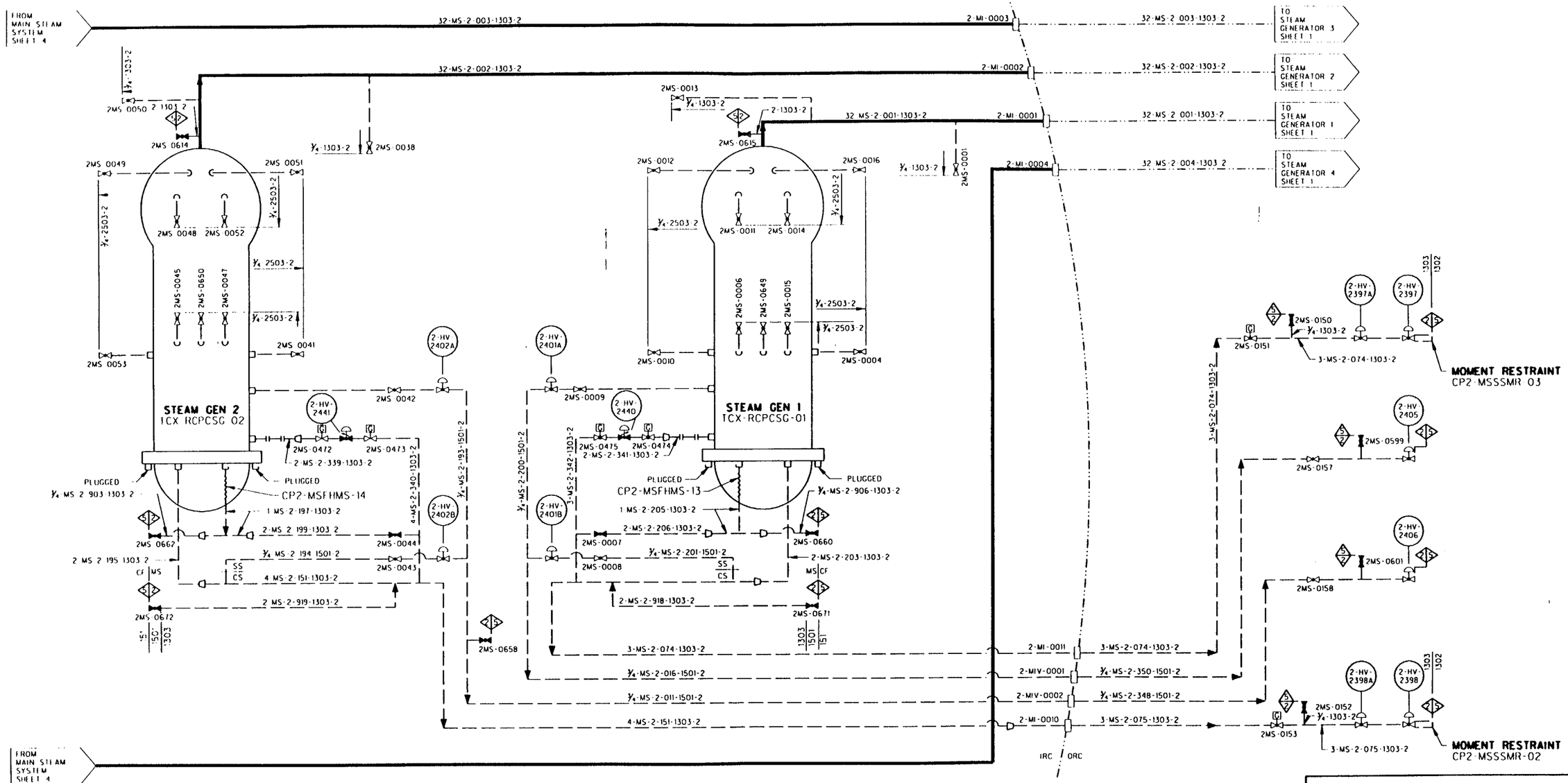

ILLUSTRATIVE USE ONLY

THIS DIAGRAM DEVELOPED FROM FLOW DIAGRAM M2-0202 SH 02

TU ELECTRIC
CPSES UNIT 2

INSERVICE INSPECTION BOUNDARY DIAGRAM

MAIN STEAM SYSTEM
SHEET 3 OF 5

REV 2 | APPROVED: SIGNED COPY ON FILE

EMS202031.1SI

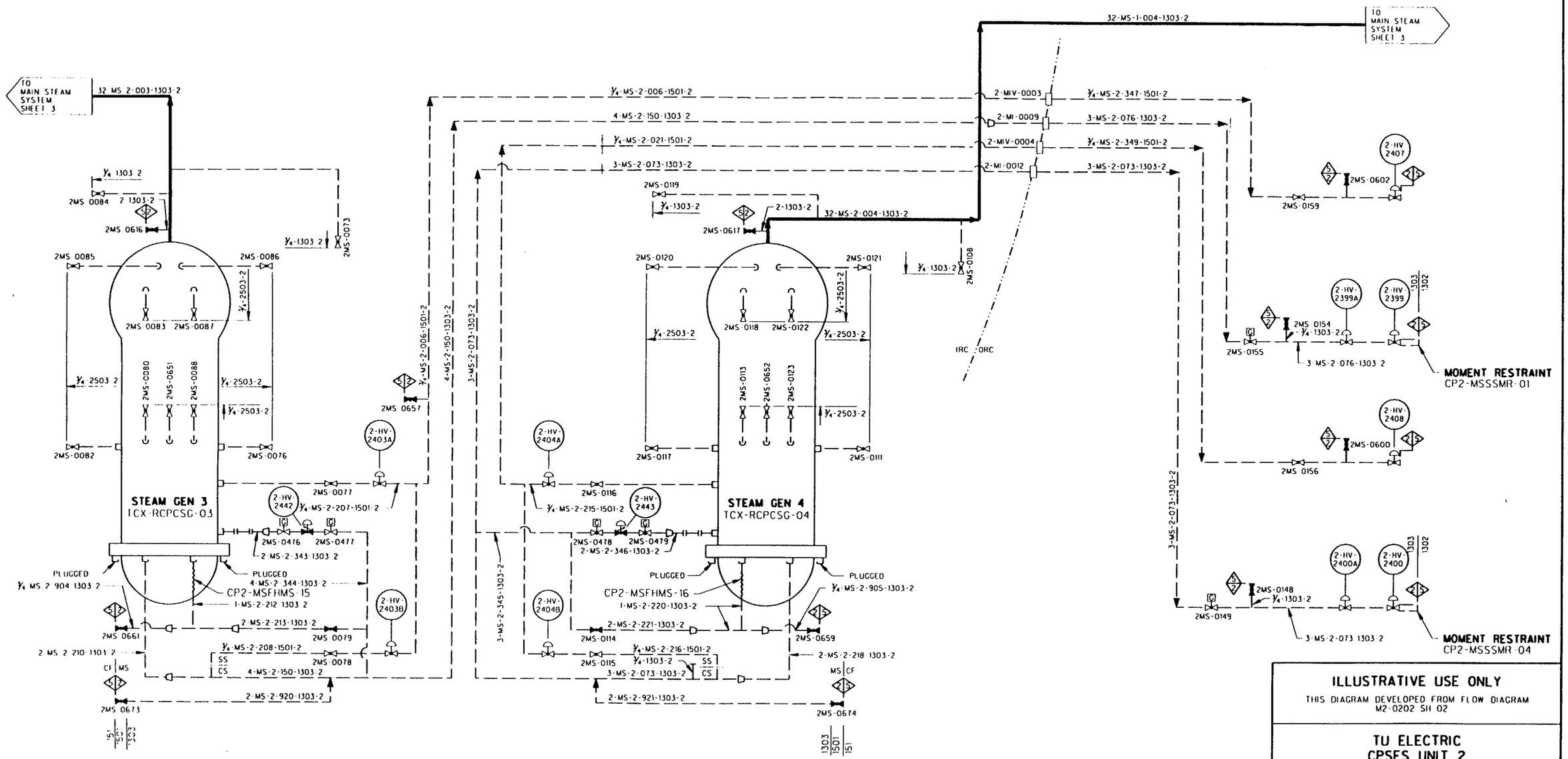

ILLUSTRATIVE USE ONLY

THIS DIAGRAM DEVELOPED FROM FLOW DIAGRAM M2-0202 SH 02

TU ELECTRIC
CPSES UNIT 2

INSERVICE INSPECTION BOUNDARY DIAGRAM

MAIN STEAM SYSTEM
SHEET 4 OF 5

REV 2 | APPROVED: SIGNED COPY ON FILE

EMS202041.DSI

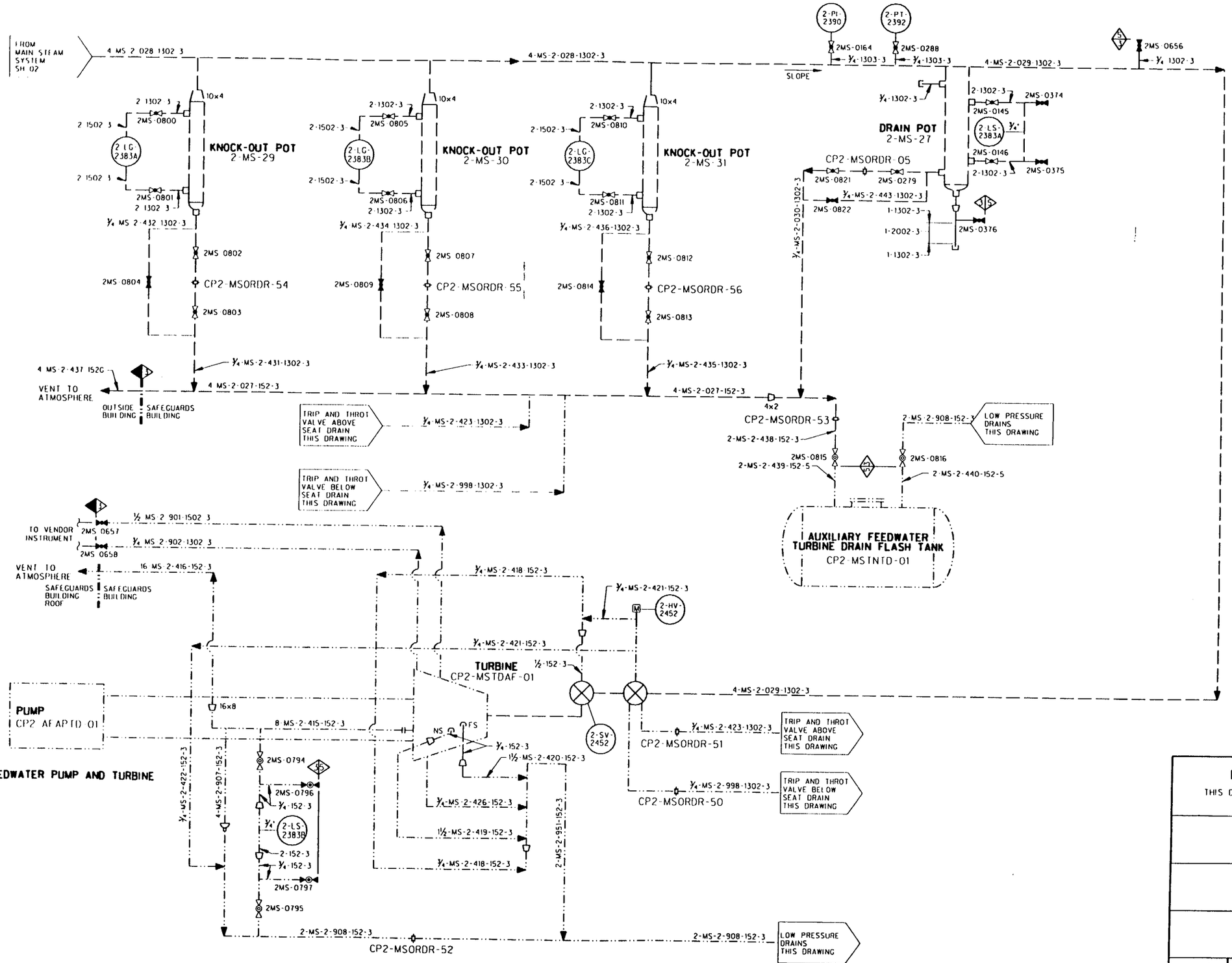

ILLUSTRATIVE USE ONLY

THIS DIAGRAM DEVELOPED FROM FLOW DIAGRAM M2-0202 SH 03

TU ELECTRIC
CPSES UNIT 2

INSERVICE INSPECTION BOUNDARY DIAGRAM

MAIN STEAM SYSTEM
SHEET 5 OF 5

REV 0 | APPROVED: SIGNED COPY ON FILE

EMS202051.1SI

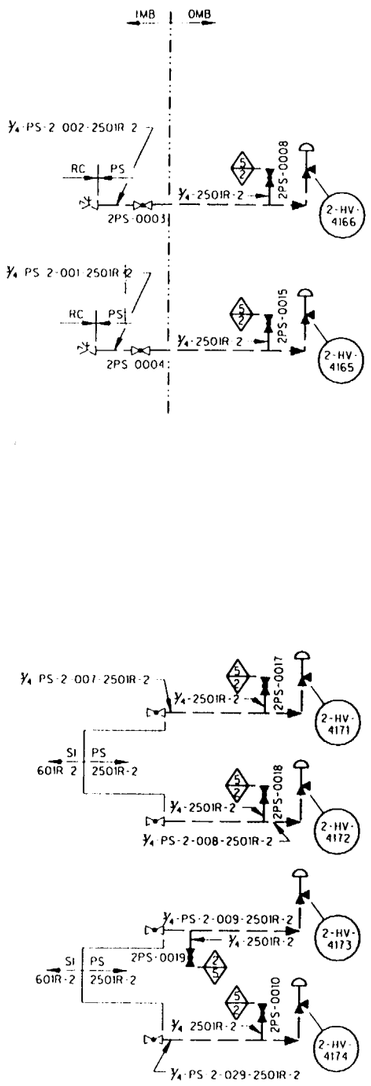

ILLUSTRATIVE USE ONLY

THIS DIAGRAM DEVELOPED FROM FLOW DIAGRAM M2-0228

TU ELECTRIC
CPSES UNIT 2

INSERVICE INSPECTION BOUNDARY DIAGRAM

PROCESS SAMPLING SYSTEM

SHEET 1 OF 1

REV 2	APPROVED: SIGNED COPY ON FILE

EPS228012.ISI

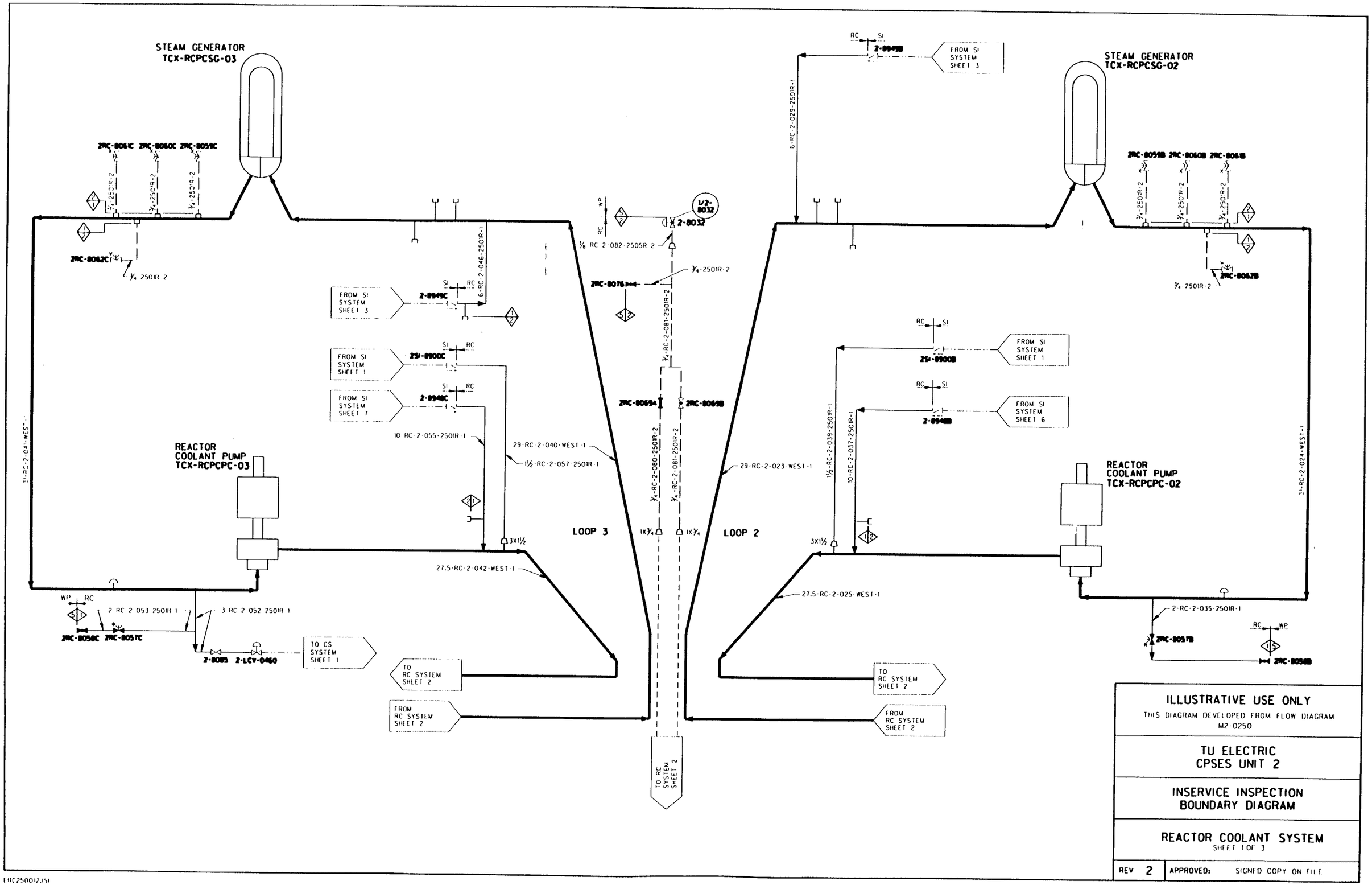

ERC250012.1SI

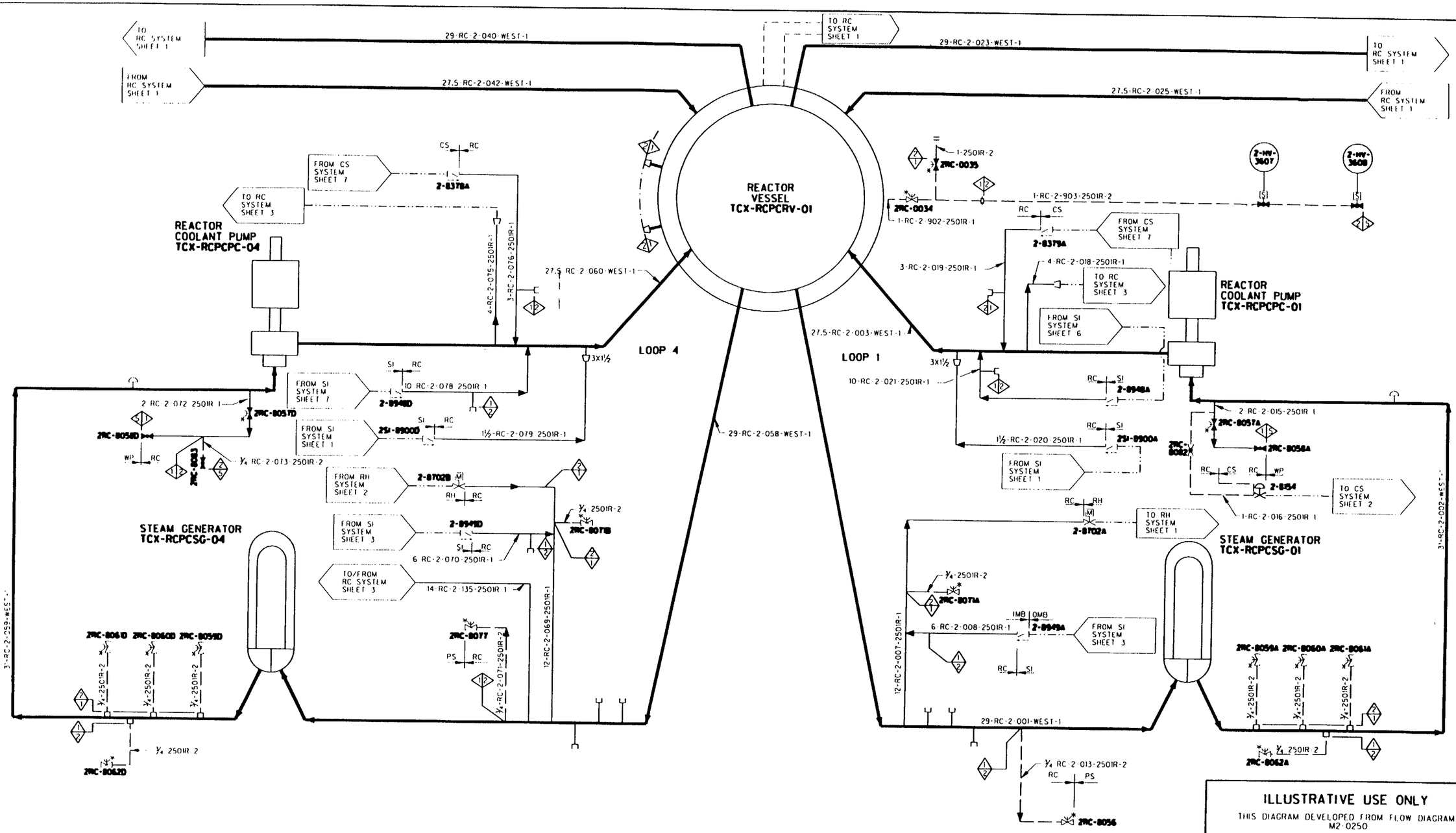

ILLUSTRATIVE USE ONLY

THIS DIAGRAM DEVELOPED FROM FLOW DIAGRAM M2-0250

TU ELECTRIC
CPSES UNIT 2

INSERVICE INSPECTION
BOUNDARY DIAGRAM

REACTOR COOLANT SYSTEM
SHEET 2 OF 3

REV 2 | APPROVED: SIGNED COPY ON FILE

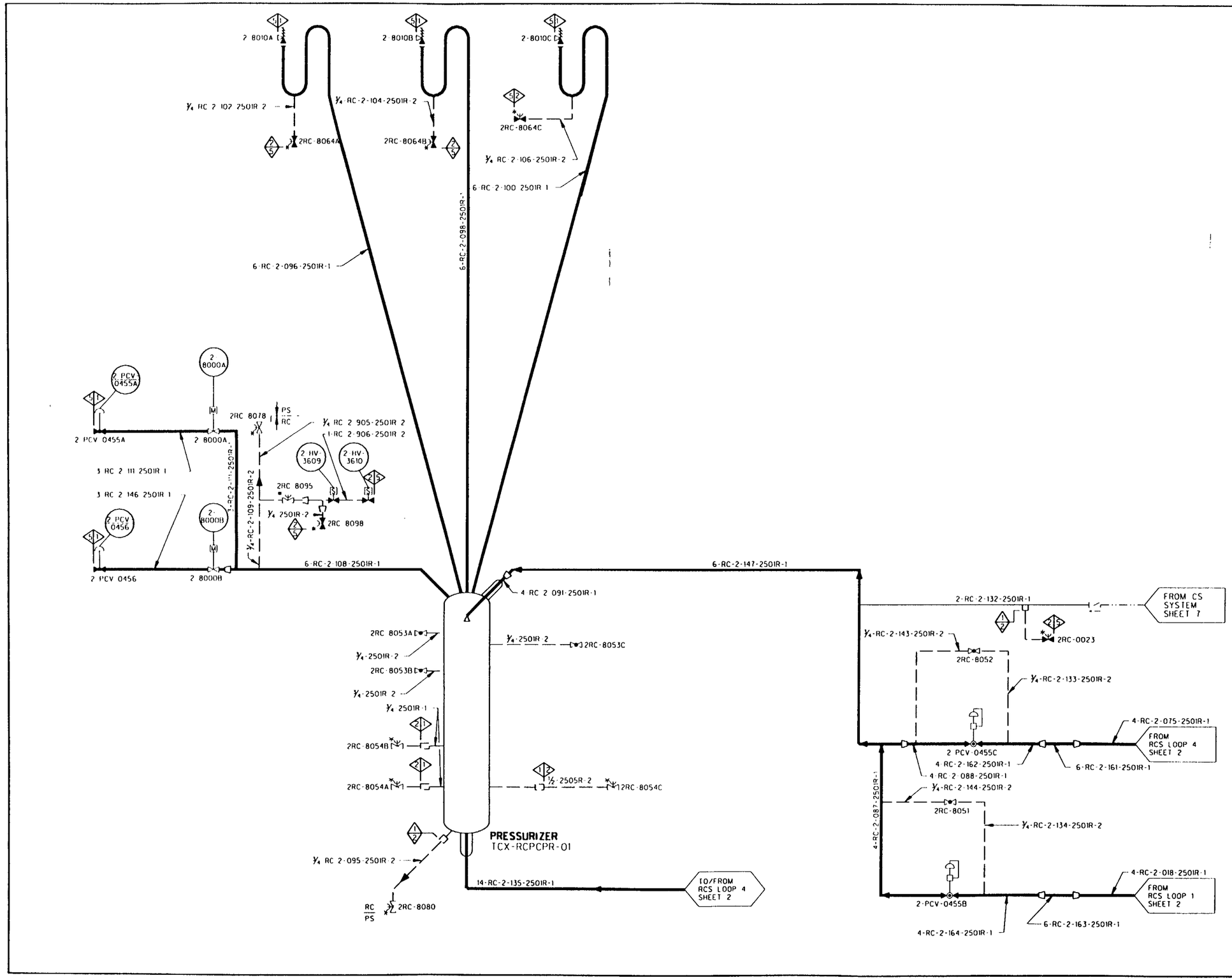

ILLUSTRATIVE USE ONLY

THIS DIAGRAM DEVELOPED FROM FLOW DIAGRAM M2-0251

TU ELECTRIC
CPSES UNIT 2

INSERVICE INSPECTION BOUNDARY DIAGRAM

REACTOR COOLANT SYSTEM
SHEET 3 OF 3

REV 1	APPROVED:	SIGNED COPY ON FILE

ERC2510 3U.SI

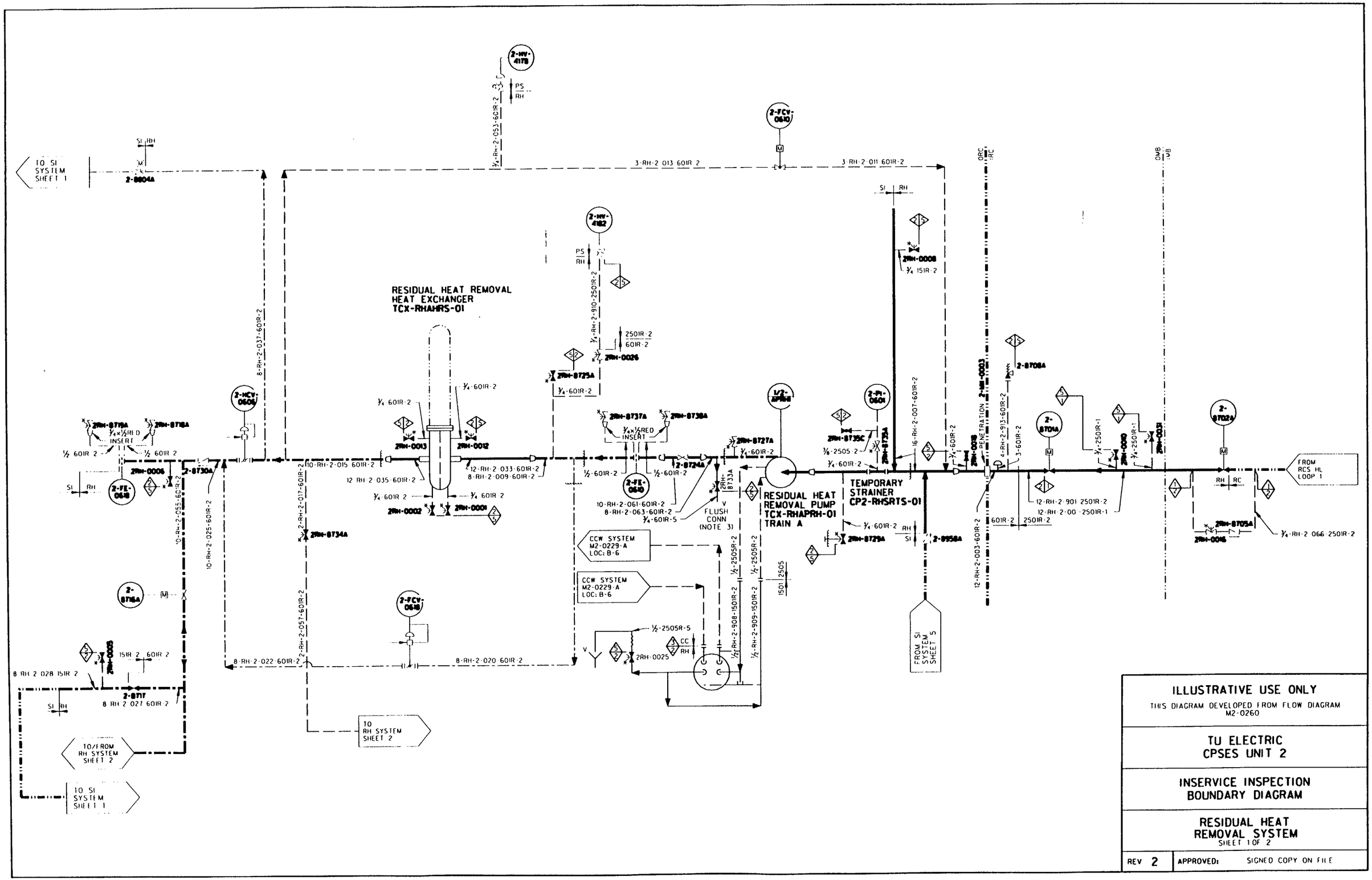

ILLUSTRATIVE USE ONLY

THIS DIAGRAM DEVELOPED FROM FLOW DIAGRAM M2-0260

TU ELECTRIC
CPSES UNIT 2

INSERVICE INSPECTION BOUNDARY DIAGRAM

RESIDUAL HEAT REMOVAL SYSTEM
SHEET 1 OF 2

REV 2 | APPROVED: SIGNED COPY ON FILE

ERH260011.1SI

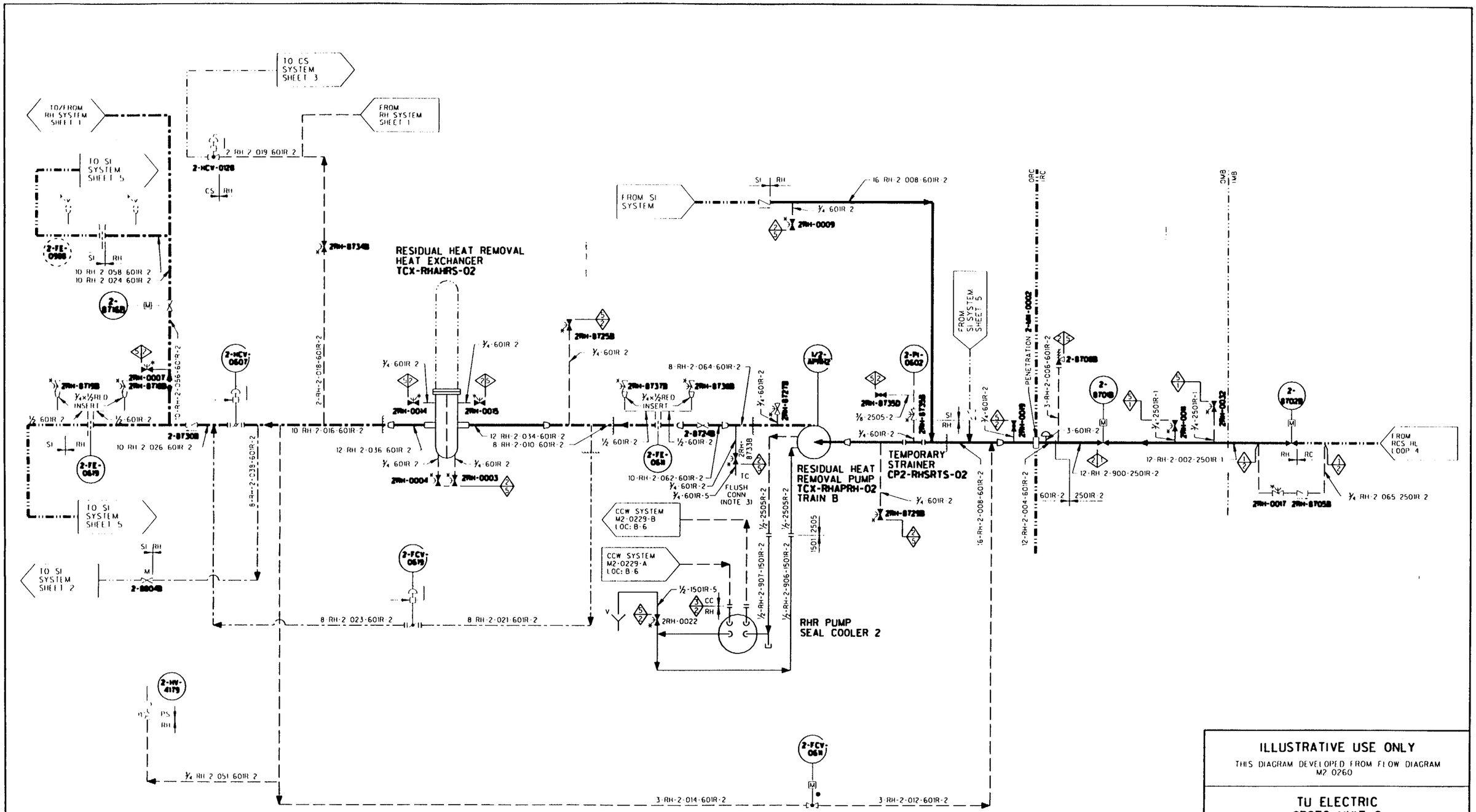

ILLUSTRATIVE USE ONLY

THIS DIAGRAM DEVELOPED FROM FLOW DIAGRAM M2 0260

TU ELECTRIC
CPSES UNIT 2

INSERVICE INSPECTION BOUNDARY DIAGRAM

RESIDUAL HEAT REMOVAL SYSTEM
SHEET 2 OF 2

REV 3	APPROVED: SIGNED COPY ON FILE

ERH2G0021.DSI

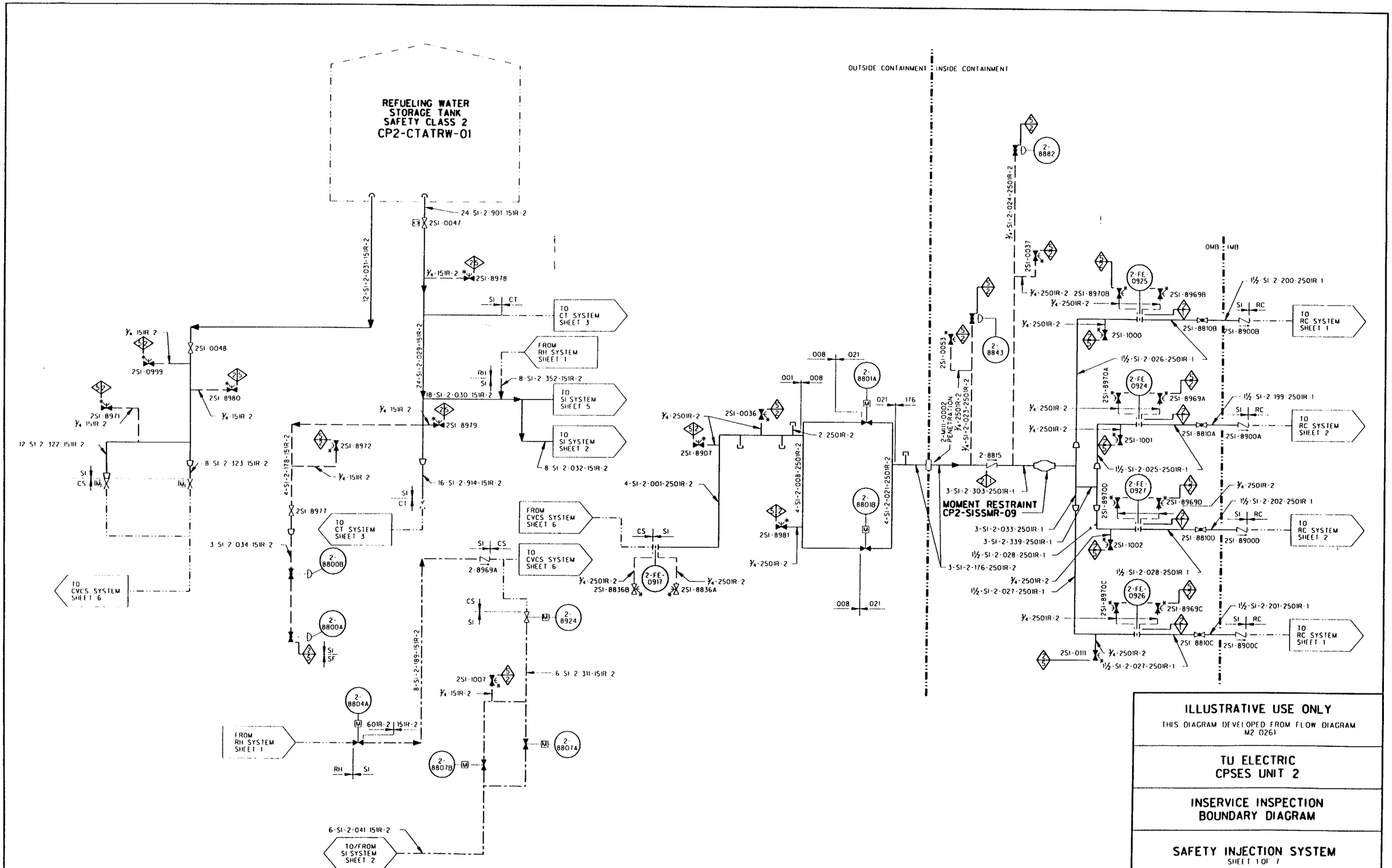

ES1261011.1SI

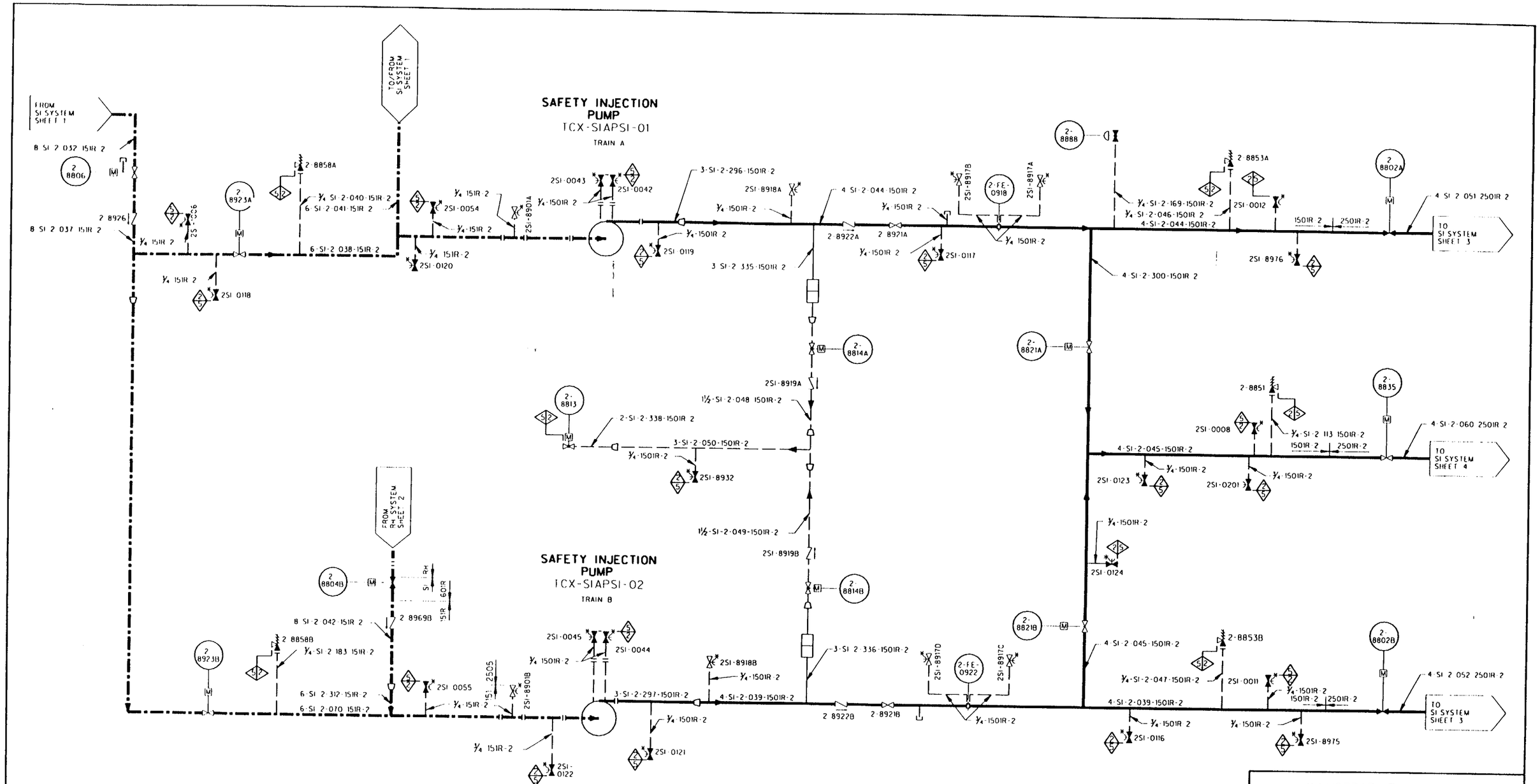
SAFETY INJECTION PUMP
TCX-SIAPSI-01
TRAIN A
SAFETY INJECTION PUMP
TCX-SIAPSI-02
TRAIN B
FROM SI SYSTEM SHEET 1
TO/FROM SI SYSTEM SHEET 1
FROM RH SYSTEM SHEET 2
TO SI SYSTEM SHEET 3
TO SI SYSTEM SHEET 4
TO SI SYSTEM SHEET 3
8 SI 2 032 151R 2
8 SI 2 037 151R 2
6 SI 2 040 151R 2
6 SI 2 041 151R 2
6 SI 2 038 151R 2
8 SI 2 042 151R 2
6 SI 2 312 151R 2
6 SI 2 070 151R 2
3 SI 2 335 150IR 2
3 SI 2 336 150IR 2
4 SI 2 051 250IR 2
4 SI 2 060 250IR 2
4 SI 2 052 250IR 2
4 SI 2 300 150IR 2
1½ SI 2 048 150IR 2
1½ SI 2 049 150IR 2
2 SI 2 338 150IR 2
3 SI 2 050 150IR 2
3 SI 2 297 150IR 2
4 SI 2 039 150IR 2
4 SI 2 045 150IR 2
4 SI 2 044 150IR 2
4 SI 2 046 150IR 2
4 SI 2 047 150IR 2
4 SI 2 169 150IR 2
4 SI 2 113 150IR 2
2 SI 2 183 151R 2
2 2505
2 2506
2 2501
2 2502
2 2503
2 2504
2 2507
2 2508
2 2509
2 2510
2 2511
2 2512
2 2513
2 2514
2 2515
2 2516
2 2517
2 2518
2 2519
2 2520
2 2521
2 2522
2 2523
2 2524
2 2525
2 2526
2

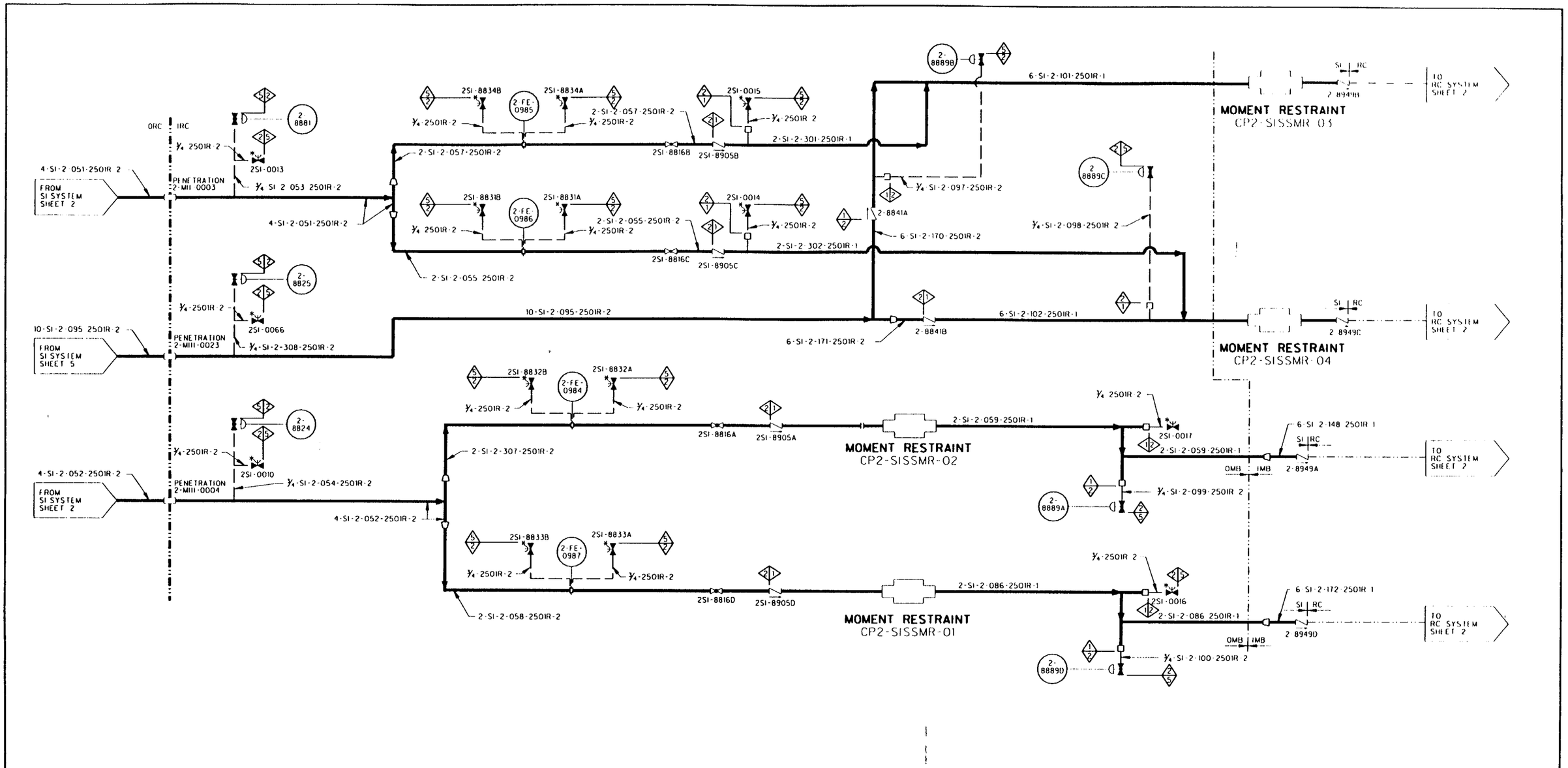

ILLUSTRATIVE USE ONLY

THIS DIAGRAM DEVELOPED FROM FLOW DIAGRAM M2-0263

TU ELECTRIC
CPSES UNIT 2

INSERVICE INSPECTION BOUNDARY DIAGRAM

SAFETY INJECTION SYSTEM
SHEET 3 OF 7

REV 1 | APPROVED: SIGNED COPY ON FILE

ESI263031.ISI

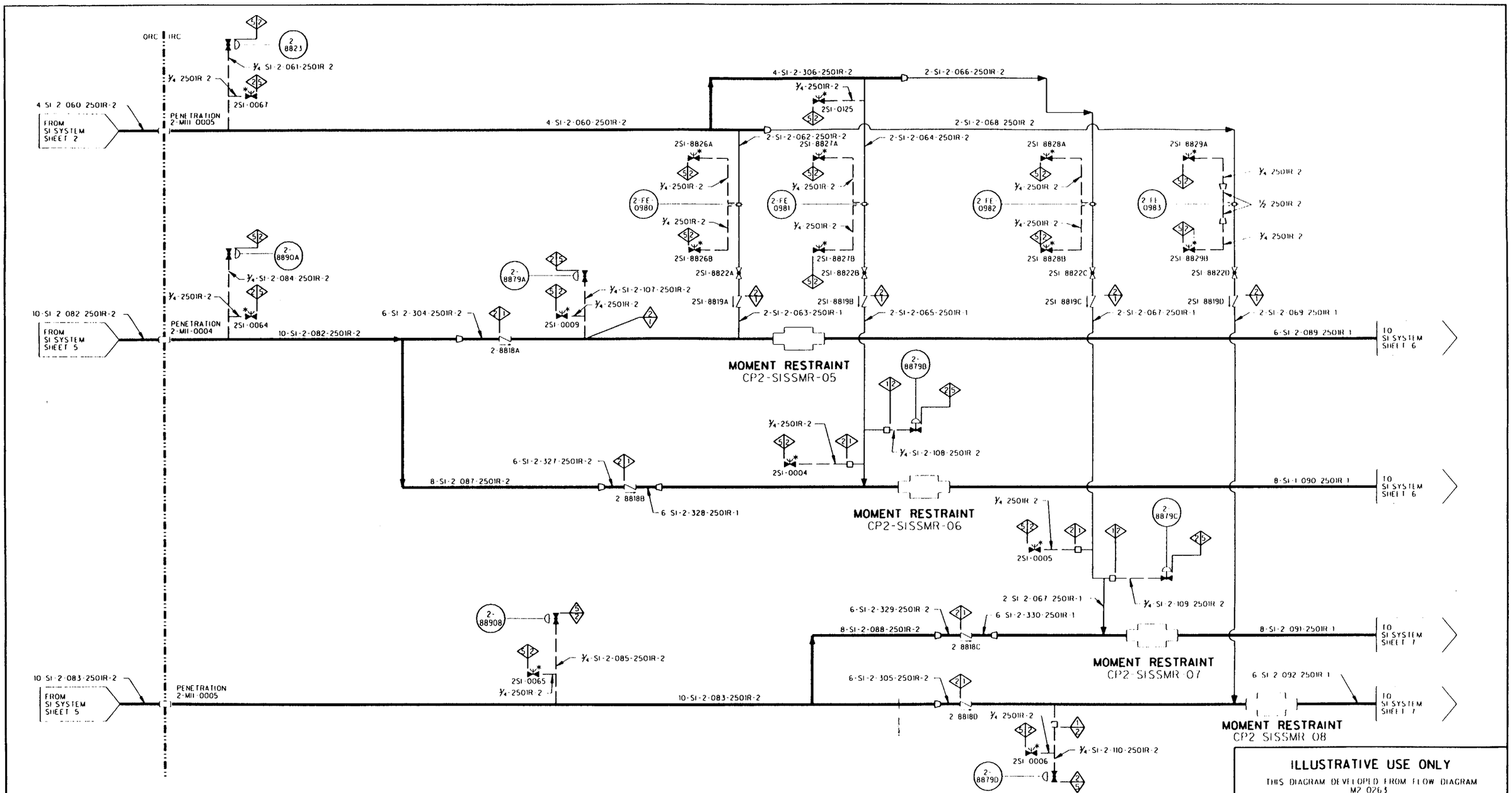

ILLUSTRATIVE USE ONLY

THIS DIAGRAM DEVELOPED FROM FLOW DIAGRAM M2 0263

TU ELECTRIC
CPSES UNIT 2

INSERVICE INSPECTION BOUNDARY DIAGRAM

SAFETY INJECTION SYSTEM
SHEET 4 OF 7

REV 1	APPROVED:	SIGNED COPY ON FILE

ES126304.ISI

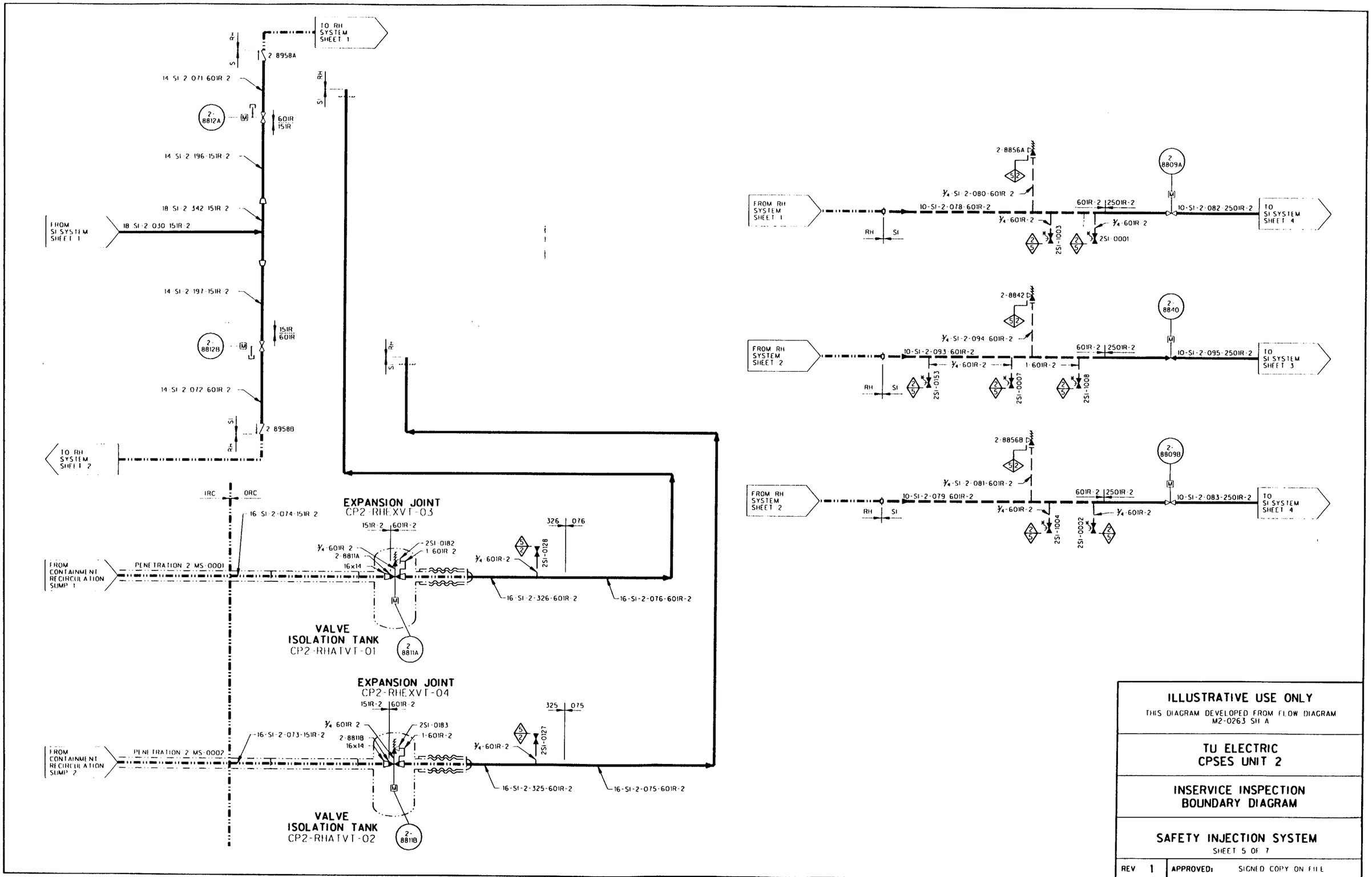

ILLUSTRATIVE USE ONLY

THIS DIAGRAM DEVELOPED FROM FLOW DIAGRAM M2-0263 SH A

TU ELECTRIC
CPSES UNIT 2

INSERVICE INSPECTION BOUNDARY DIAGRAM

SAFETY INJECTION SYSTEM
SHEET 5 OF 7

REV	1	APPROVED:	SIGNED COPY ON FILE

ES126 3050.1SI

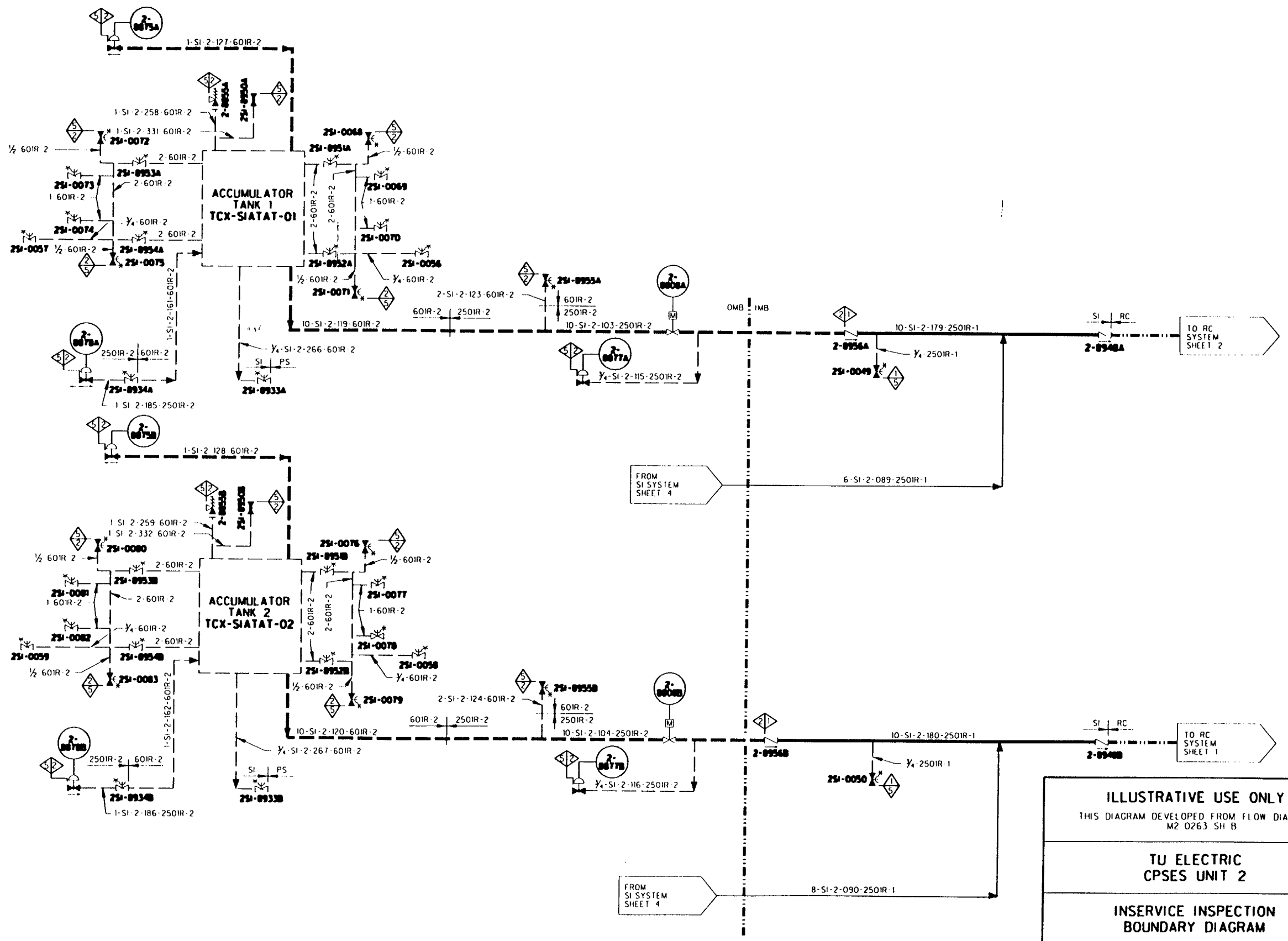

ILLUSTRATIVE USE ONLY

THIS DIAGRAM DEVELOPED FROM FLOW DIAGRAM M2 0263 SH B

TU ELECTRIC
CPSES UNIT 2

INSERVICE INSPECTION
BOUNDARY DIAGRAM

SAFETY INJECTION SYSTEM
SHEET 6 OF 7

REV 1 | APPROVED: SIGNED COPY ON FILE

1 SI 26 1061.1SI

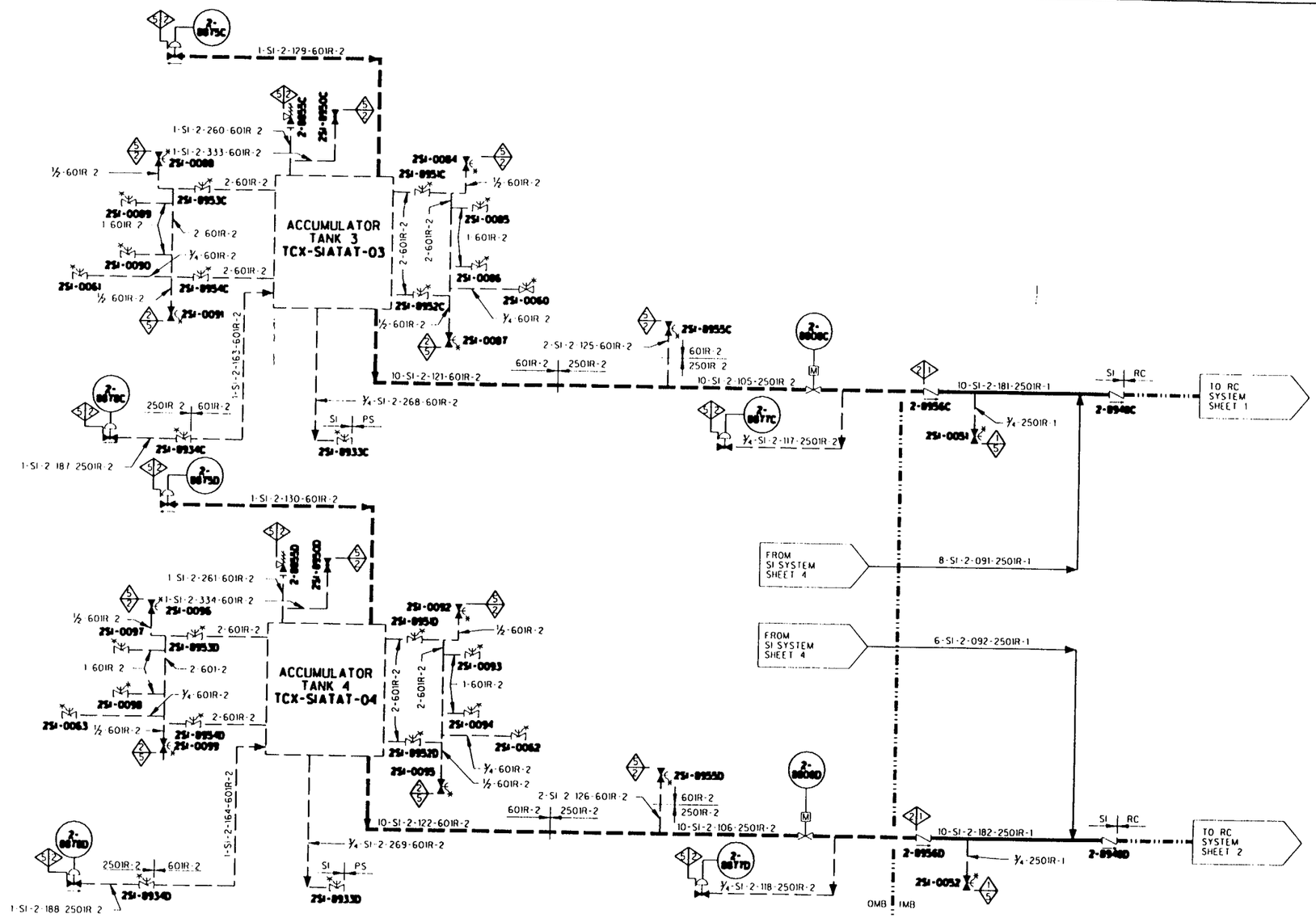

ILLUSTRATIVE USE ONLY

THIS DIAGRAM DEVELOPED FROM FLOW DIAGRAM M2-0263 SH B

TU ELECTRIC
CPSES UNIT 2

INSERVICE INSPECTION BOUNDARY DIAGRAM

SAFETY INJECTION SYSTEM
SHEET 7 OF 7

REV 1 | APPROVED: SIGNED COPY ON FILE

ES1263071.DSI

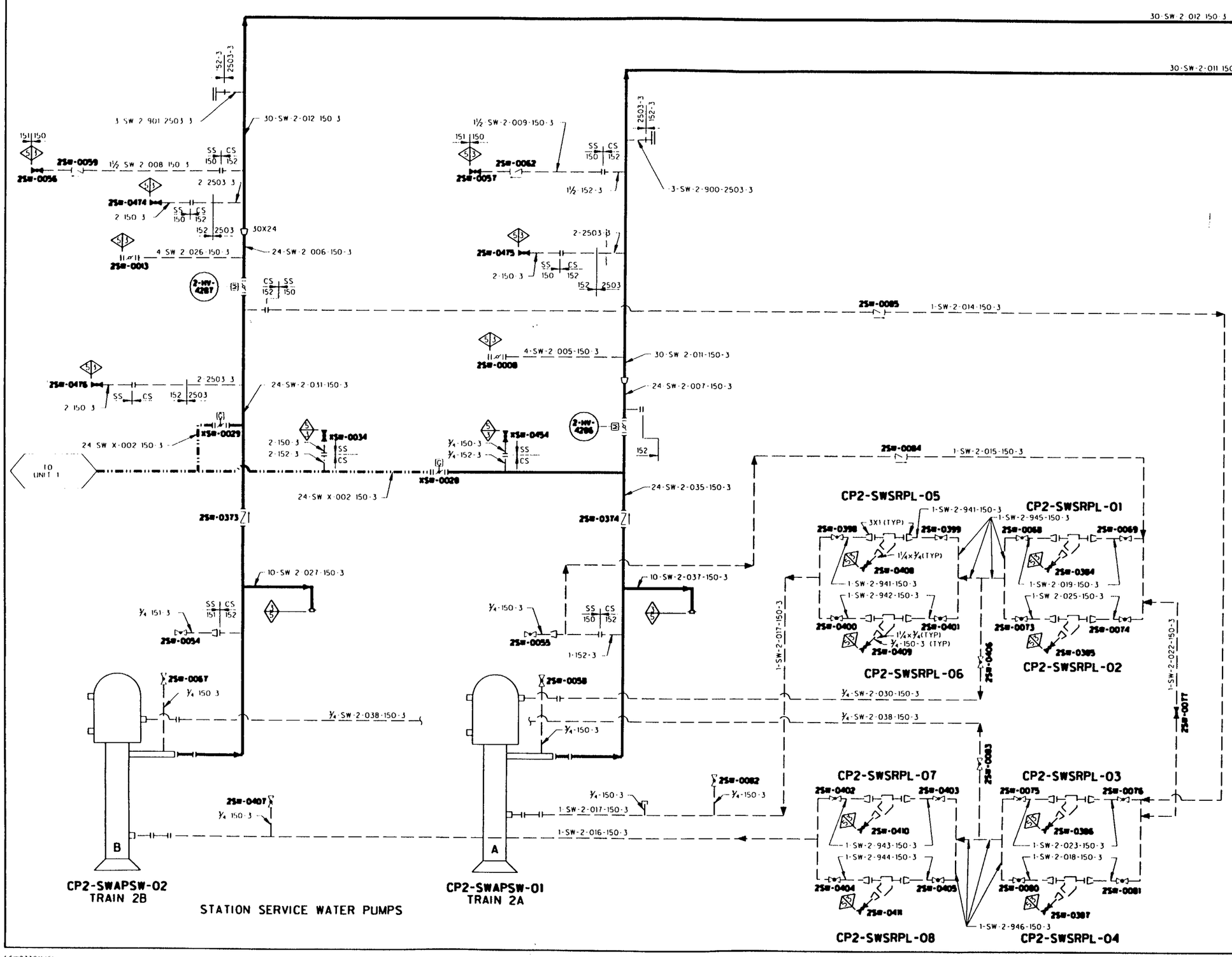

ILLUSTRATIVE USE ONLY

THIS DIAGRAM DEVELOPED FROM FLOW DIAGRAM M2-0233

TU ELECTRIC
CPSES UNIT 2

INSERVICE INSPECTION
BOUNDARY DIAGRAM

STATION SERVICE WATER SYSTEM
SHEET 1 OF 5

REV 1 | APPROVED: SIGNED COPY ON FILE

ESW233011.151

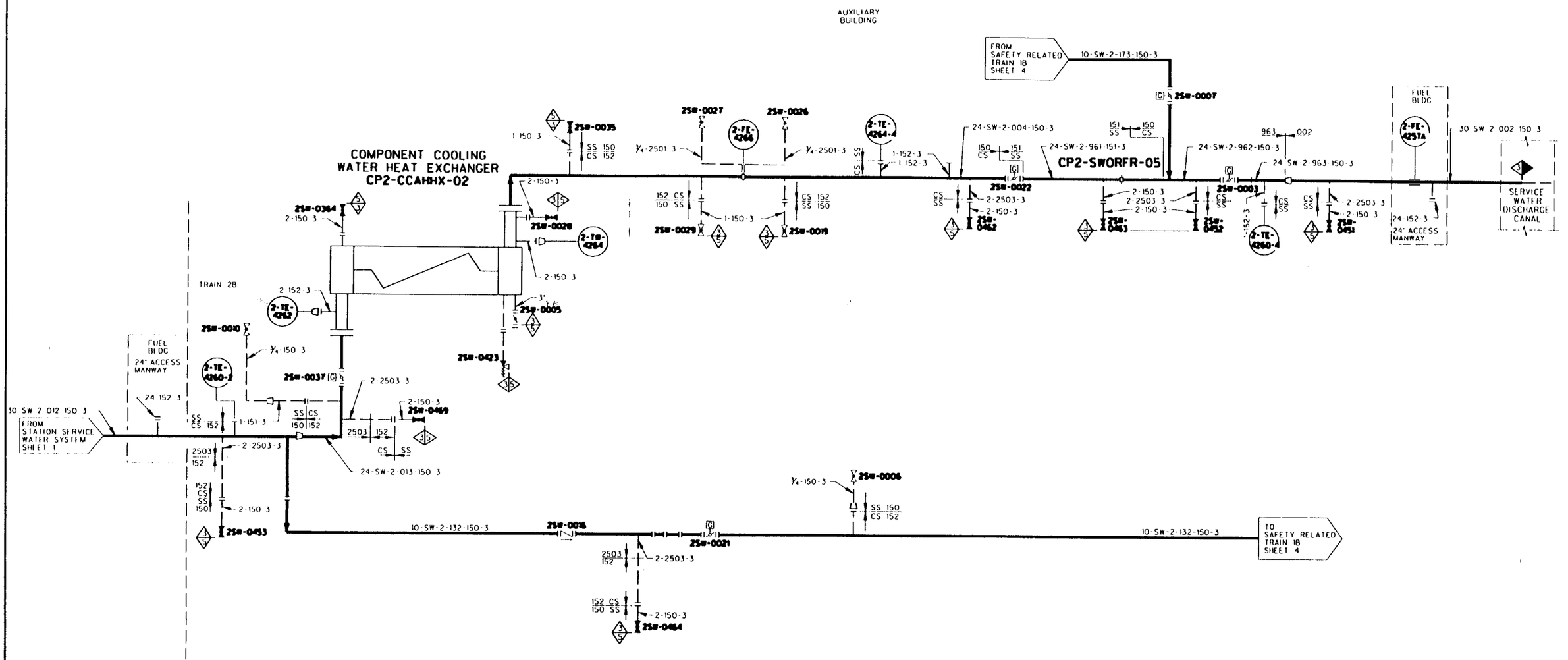

ILLUSTRATIVE USE ONLY

THIS DIAGRAM DEVELOPED FROM FLOW DIAGRAM M2-0233 SH A

TU ELECTRIC
CPSES UNIT 2

INSERVICE INSPECTION BOUNDARY DIAGRAM

STATION SERVICE WATER SYSTEM
SHEET 2 OF 5

REV 1	APPROVED:	SIGNED COPY ON FILE

ESW233021.1S1

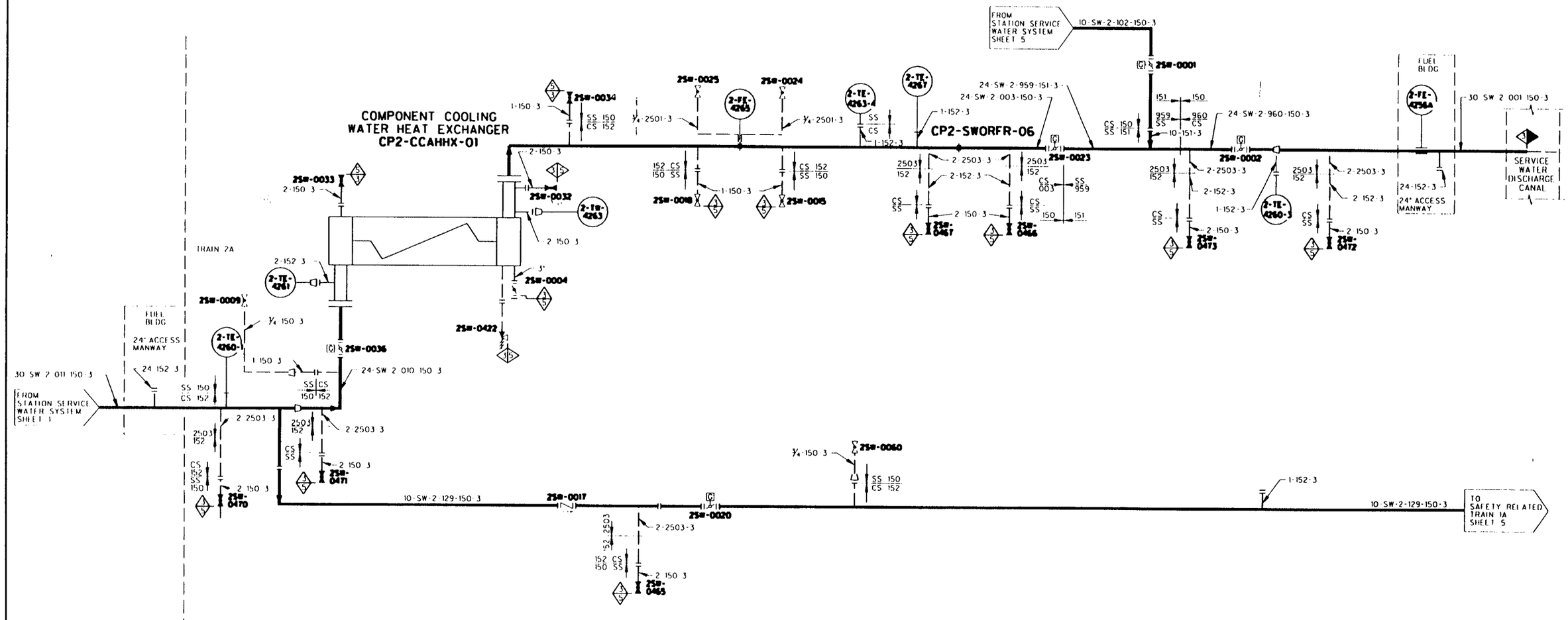

ILLUSTRATIVE USE ONLY

THIS DIAGRAM DEVELOPED FROM FLOW DIAGRAM M2-0233 SH A

TU ELECTRIC
CPSES UNIT 2

INSERVICE INSPECTION BOUNDARY DIAGRAM

STATION SERVICE WATER SYSTEM
SHEET 3 OF 5

REV 1	APPROVED: SIGNED COPY ON FILE

ESW2330.DISI

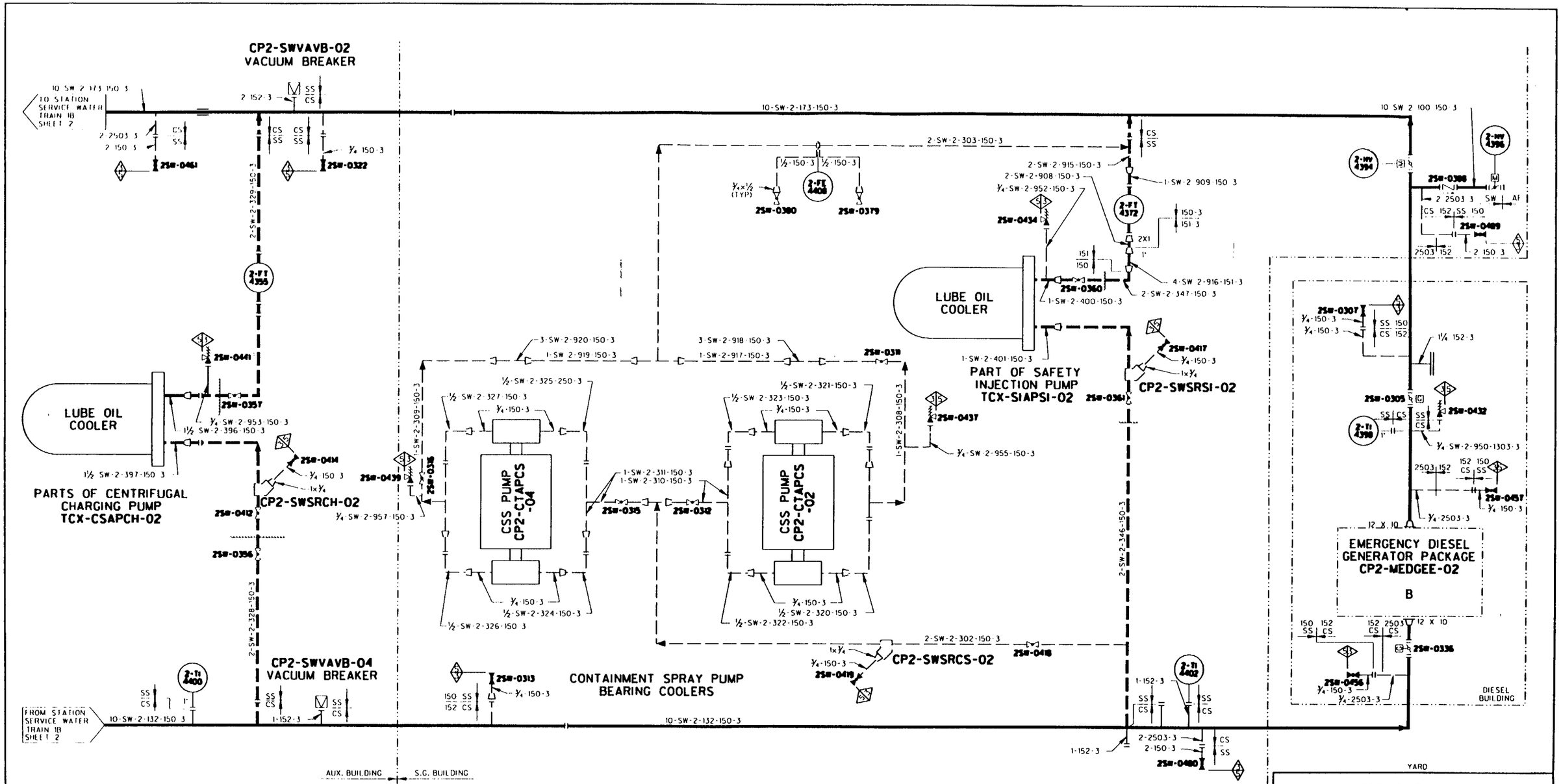

ILLUSTRATIVE USE ONLY

THIS DIAGRAM DEVELOPED FROM FLOW DIAGRAM M2-0234

TU ELECTRIC
CPSES UNIT 2

INSERVICE INSPECTION BOUNDARY DIAGRAM

STATION SERVICE WATER SYSTEM
SHEET 4 OF 5

REV 1	APPROVED:	SIGNED COPY ON FILE

ESW234041.1S1

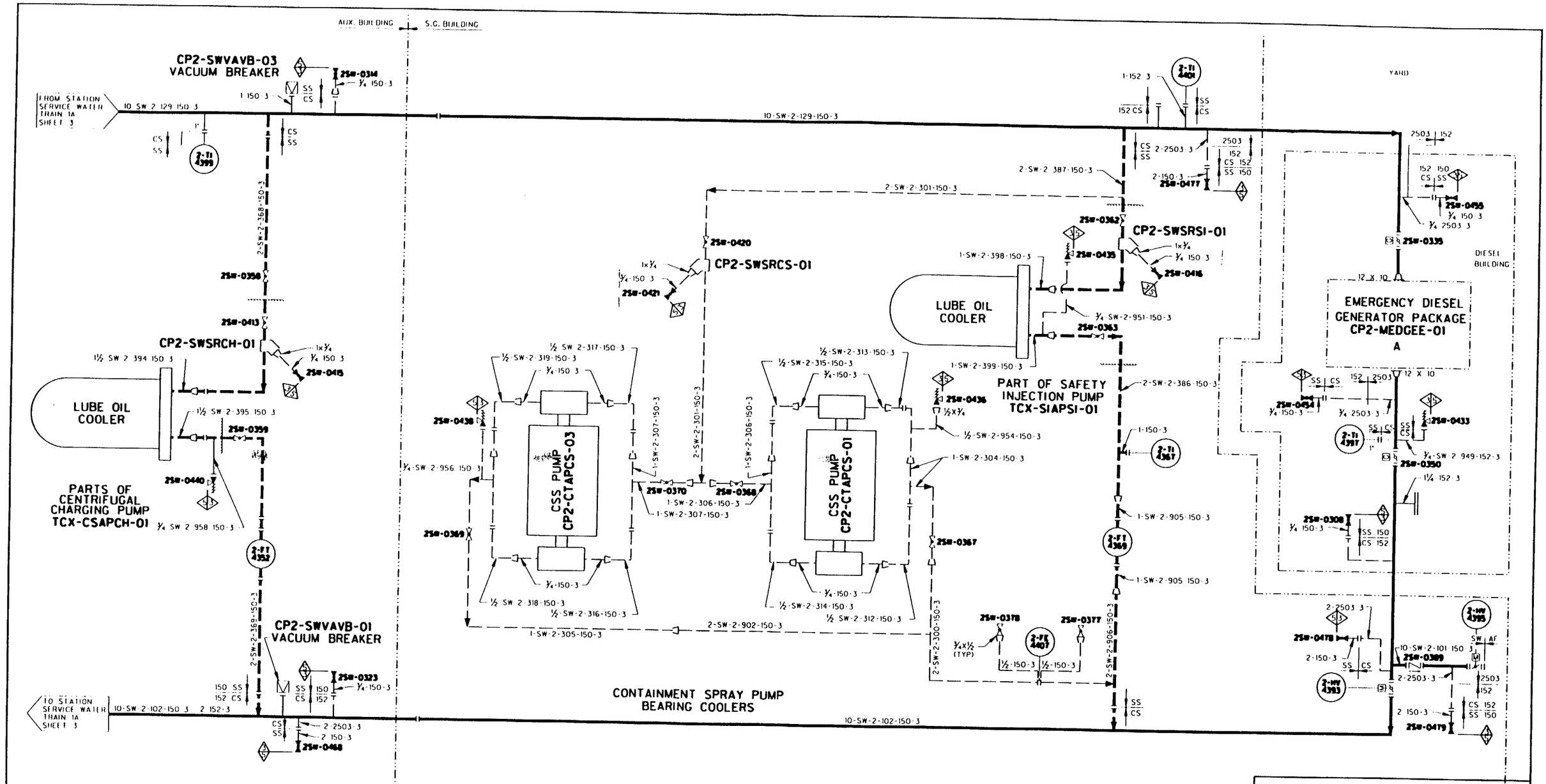

ILLUSTRATIVE USE ONLY

THIS DIAGRAM DEVELOPED FROM FLOW DIAGRAM M2 0234

TU ELECTRIC
CPSES UNIT 2

INSERVICE INSPECTION BOUNDARY DIAGRAM

STATION SERVICE WATER SYSTEM
SHEET 5 OF 5

REV 1 | APPROVED: SIGNED COPY ON FILE

ESW2140S1.ISI

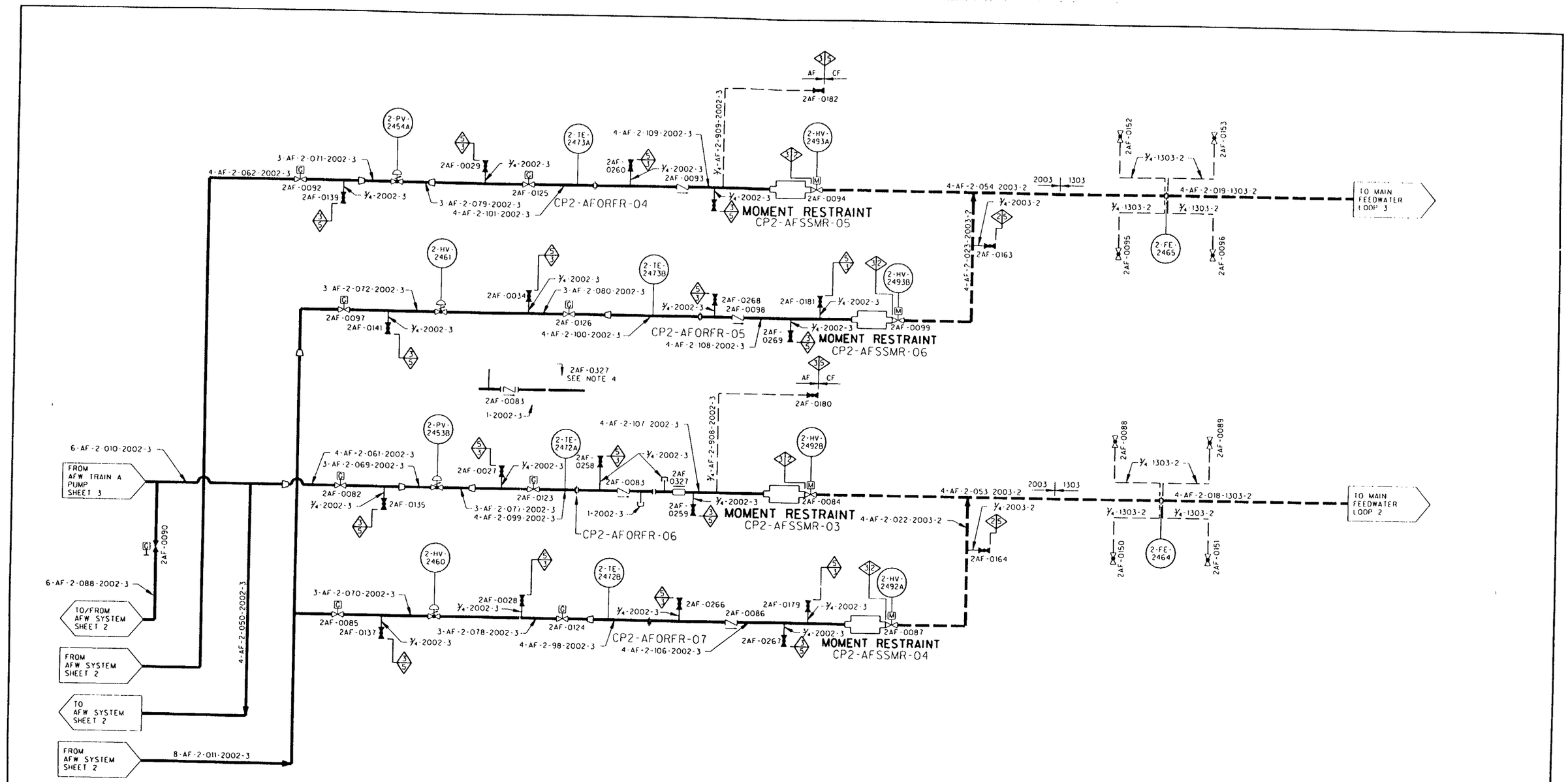

ILLUSTRATIVE USE ONLY

THIS DIAGRAM DEVELOPED FROM FLOW DIAGRAM M2-0206

TU ELECTRIC
CPSES UNIT 2

INSERVICE INSPECTION
BOUNDARY DIAGRAM

AUXILARY FEEDWATER SYSTEM
SHEET 1 OF 5

REV 2 | APPROVED: SIGNED COPY ON FILE

EAF206011.1SI

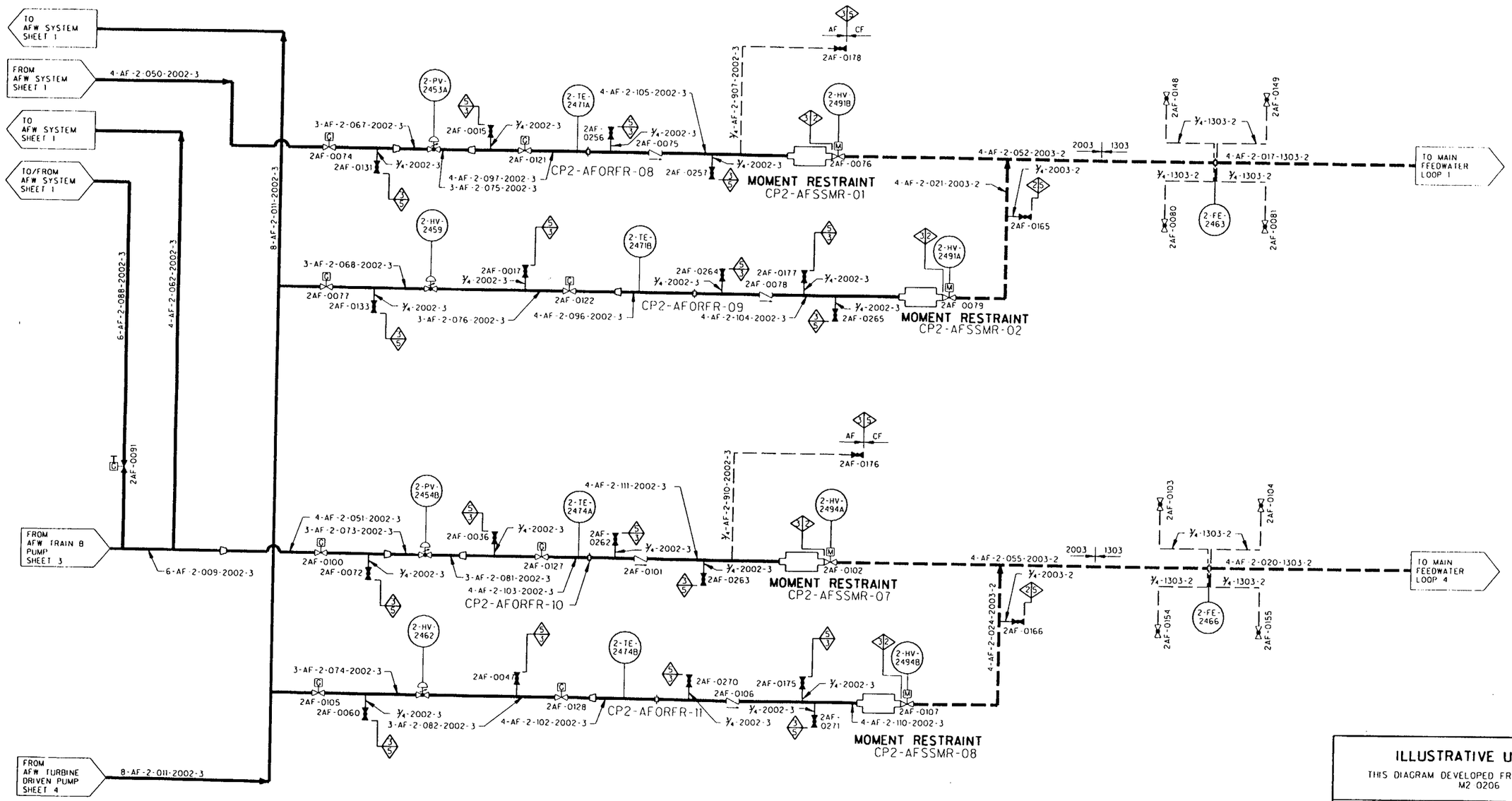

ILLUSTRATIVE USE ONLY

THIS DIAGRAM DEVELOPED FROM FLOW DIAGRAM M2 0206

TU ELECTRIC
CPSES UNIT 2

INSERVICE INSPECTION
BOUNDARY DIAGRAM

AUXILIARY FEEDWATER SYSTEM
SHEET 2 OF 5

REV 1 | APPROVED: SIGNED COPY ON FILE

EAF206021.1S1

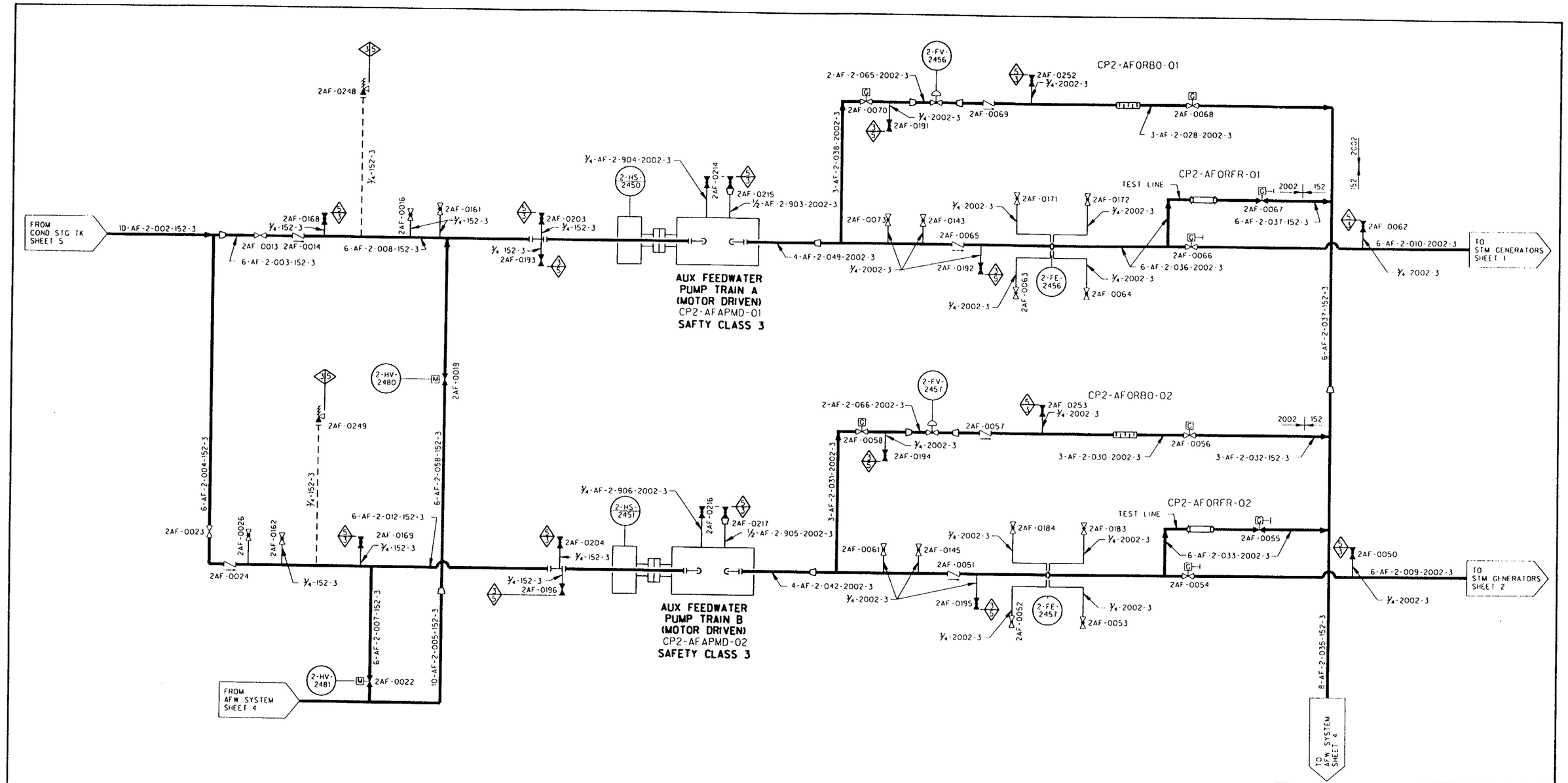

ILLUSTRATIVE USE ONLY

THIS DIAGRAM DEVELOPED FROM FLOW DIAGRAM M2-0206 SH 01

TU ELECTRIC
CPSES UNIT 2

INSERVICE INSPECTION BOUNDARY DIAGRAM

AUXILIARY FEEDWATER SYSTEM
SHEET 3 OF 5

REV 1 | APPROVED: SIGNED COPY ON FILE

EAF206031.1SI

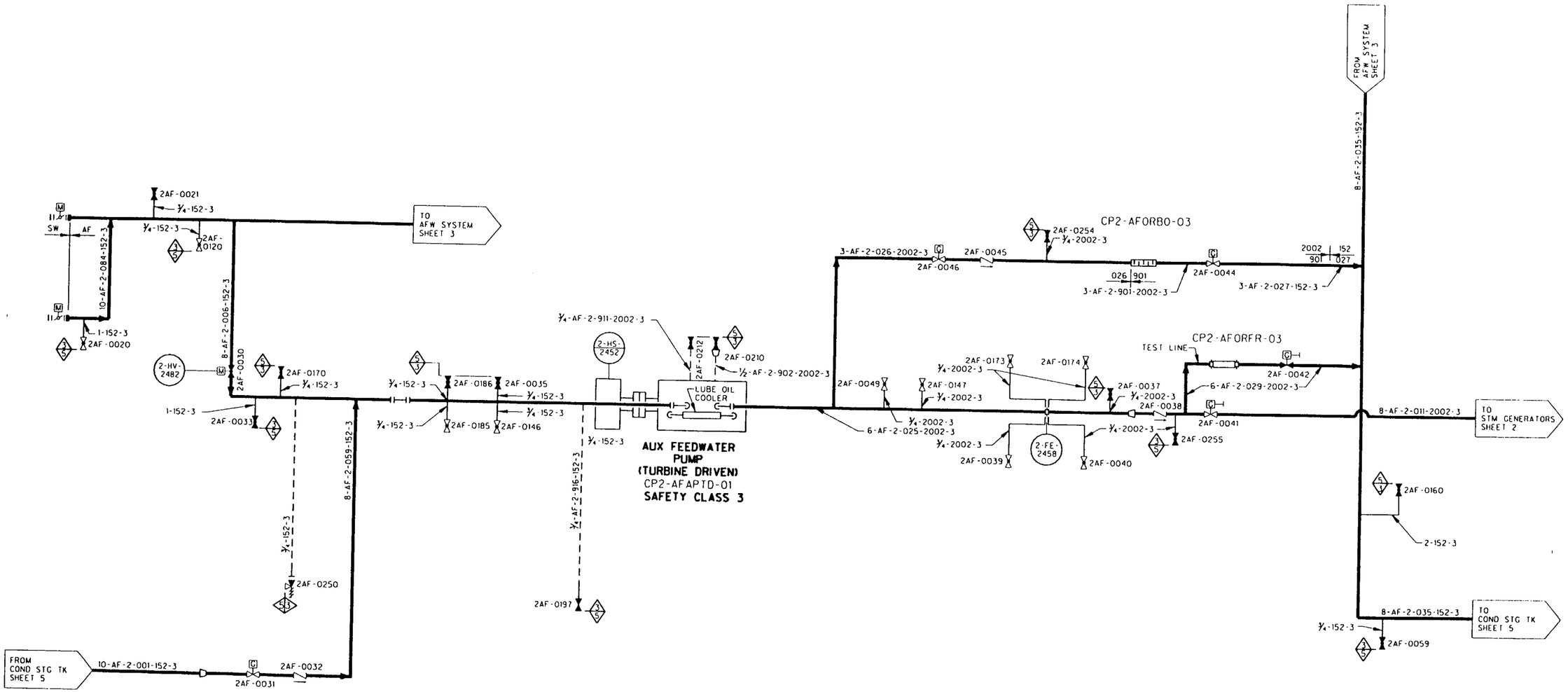

ILLUSTRATIVE USE ONLY

THIS DIAGRAM DEVELOPED FROM FLOW DIAGRAM M2-0206 SH 01

TU ELECTRIC
CPSES UNIT 2

INSERVICE INSPECTION BOUNDARY DIAGRAM

AUXILIARY FEEDWATER SYSTEM
SHEET 4 OF 5

REV 1 | APPROVED: SIGNED COPY ON FILE

EAF206041.ISI

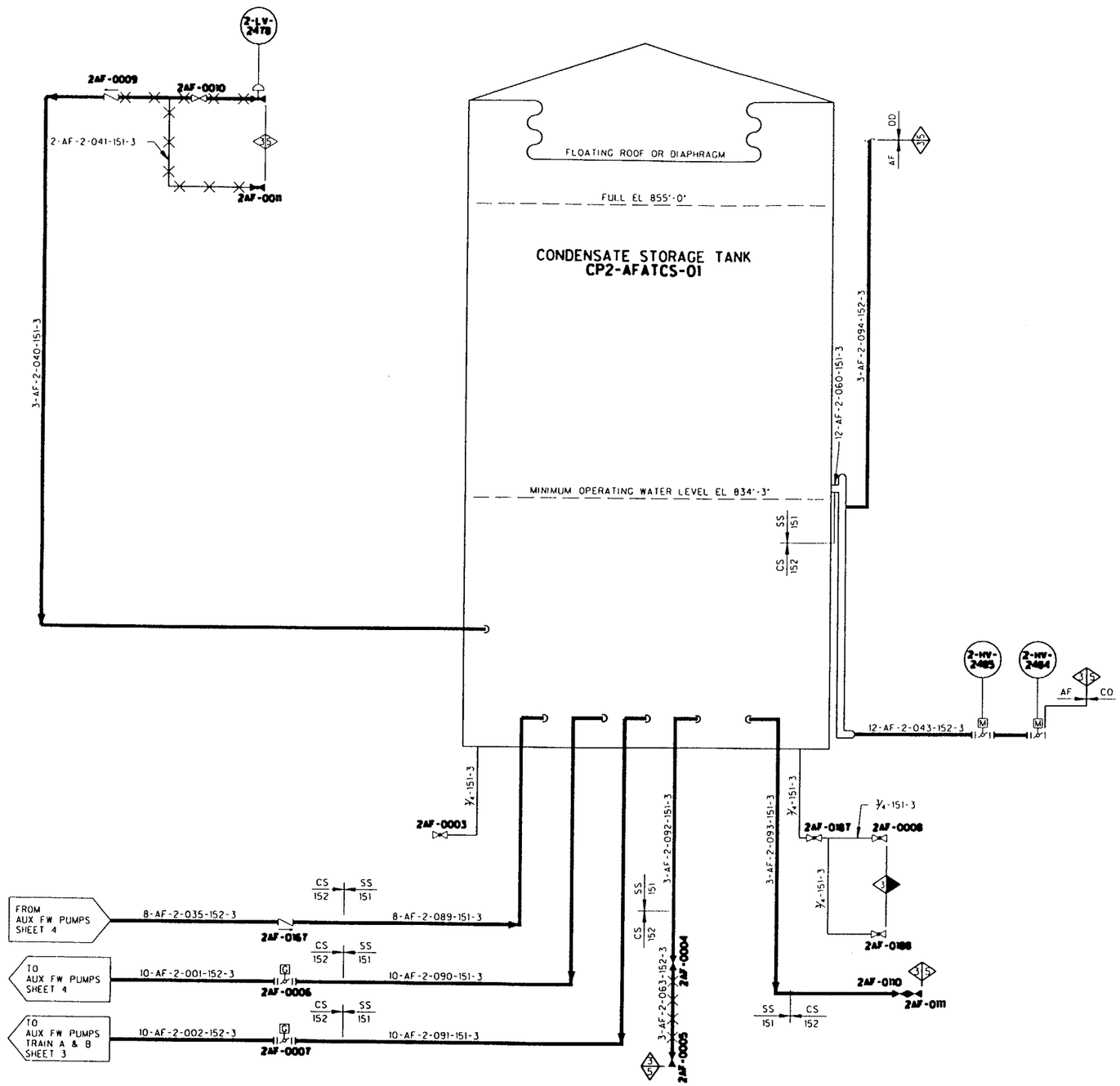

ILLUSTRATIVE USE ONLY

THIS DIAGRAM DEVELOPED FROM FLOW DIAGRAM M2-0206 SH 02

TU ELECTRIC
CPSES UNIT 2

INSERVICE INSPECTION BOUNDARY DIAGRAM

AUXILARY FEEDWATER SYSTEM

SHEET 5 OF 5

REV 2 | APPROVED: SIGNED COPY ON FILE

EAF 206051.1SI

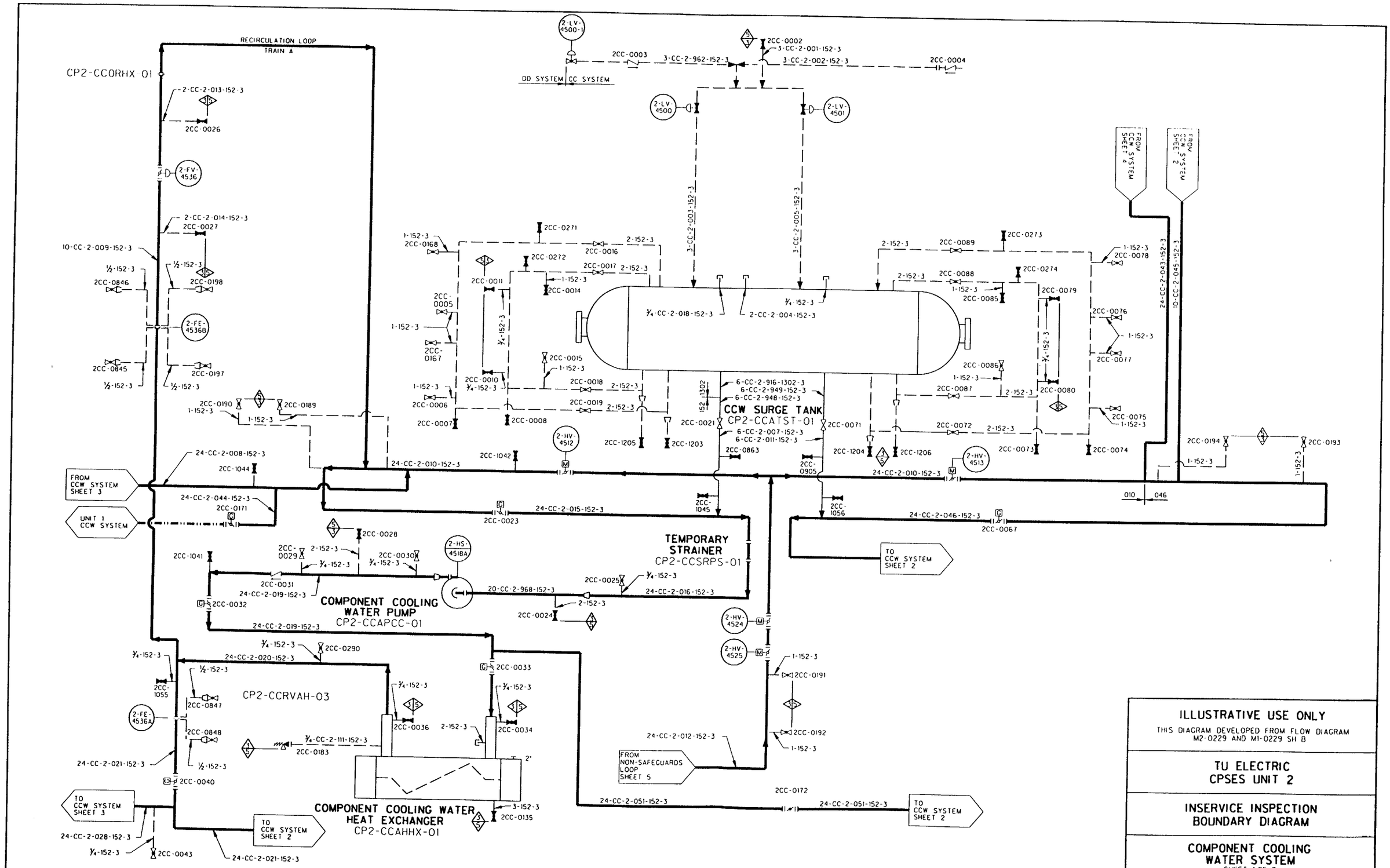

ECC229012.JSI

ILLUSTRATIVE USE ONLY

THIS DIAGRAM DEVELOPED FROM FLOW DIAGRAM M2-0229 AND M1-0229 SH B

TU ELECTRIC
CPSES UNIT 2

INSERVICE INSPECTION BOUNDARY DIAGRAM

COMPONENT COOLING WATER SYSTEM
SHEET 1 OF 9

REV 4 | APPROVED: SIGNED COPY ON FILE

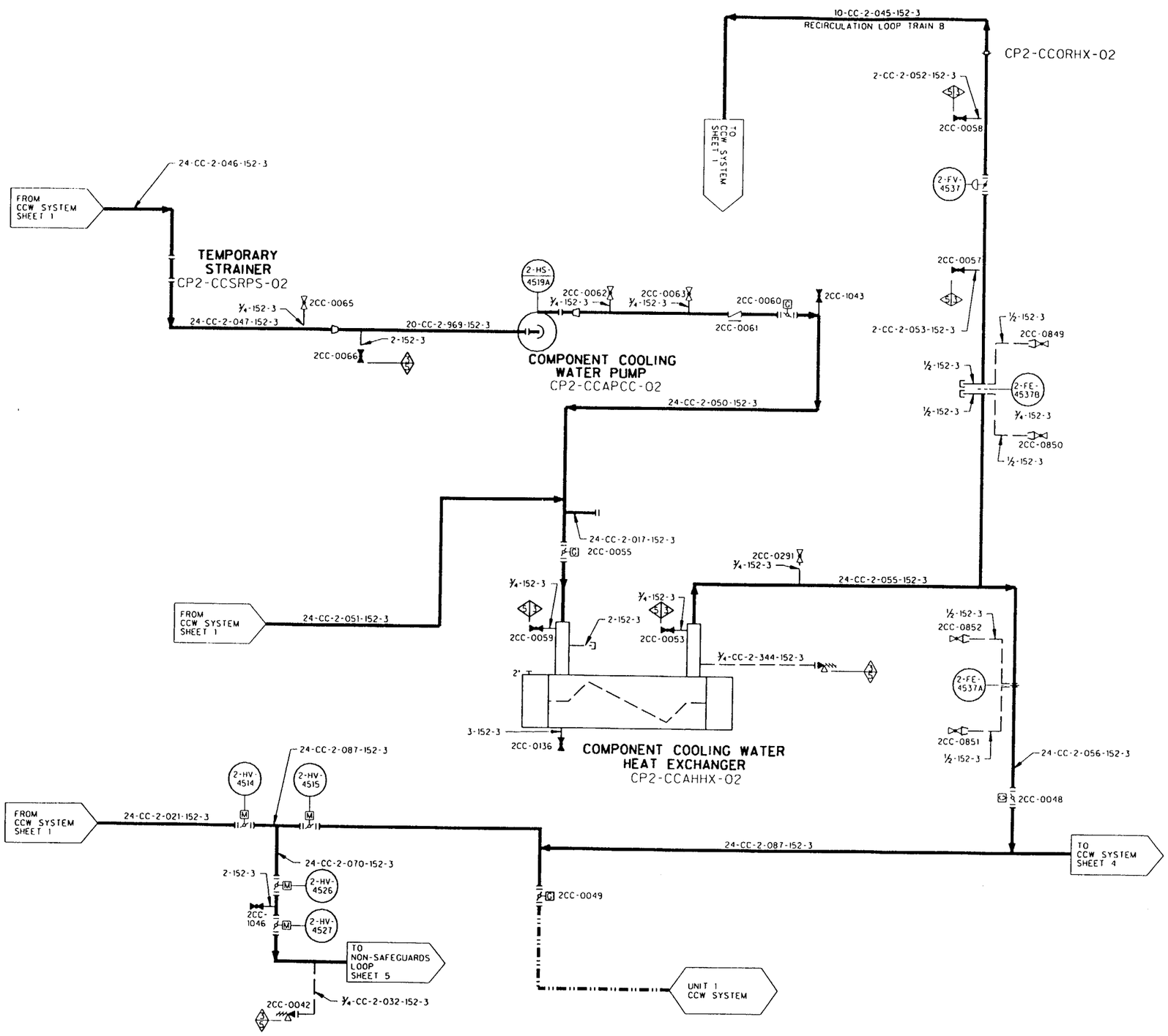

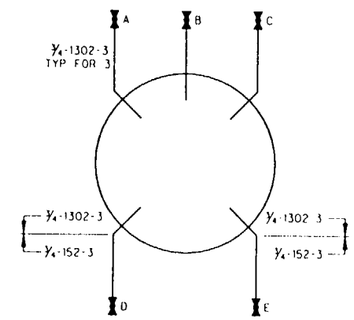

PUMP	A	B	C	D	E
CP2-CCAPCC-01	2CC-0232	2CC-0233	2CC-0234	2CC-0235	2CC-0236
CP2-CCAPCC-01	2CC-0237	2CC-0238	2CC-0239	2CC-0240	2CC-0241

PUMPS CP2-CCAPCC-01,02
VENTS AND DRAINS DETAIL

ILLUSTRATIVE USE ONLY

THIS DIAGRAM DEVELOPED FROM FLOW DIAGRAM M2-0229 AND M1-0229 SH 8

TU ELECTRIC
CPSES UNIT 2

INSERVICE INSPECTION
BOUNDARY DIAGRAM

COMPONENT COOLING
WATER SYSTEM
SHEET 2 OF 9

REV 3 | APPROVED: SIGNED COPY ON FILE

ECC229022.1S1

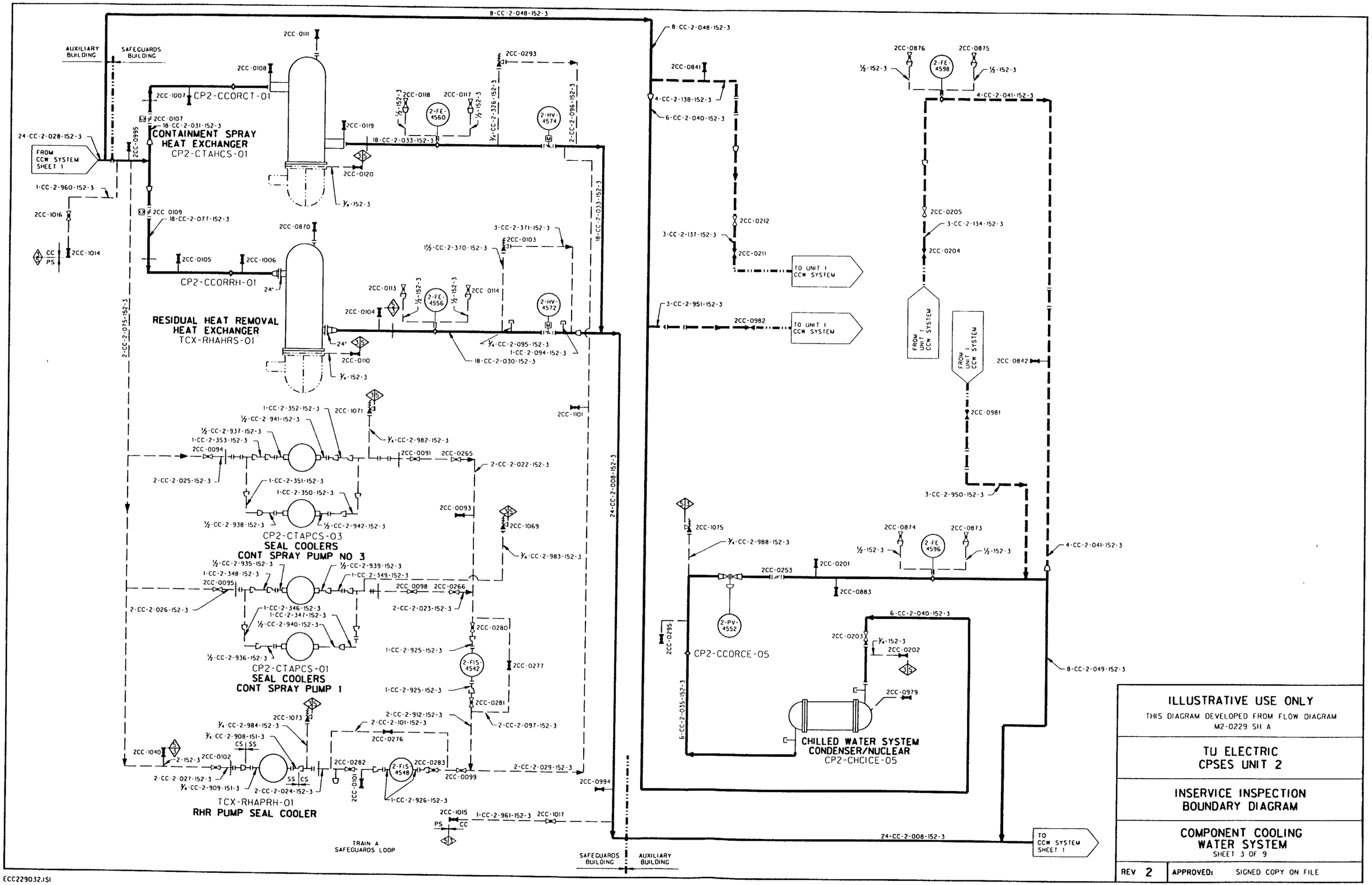

ILLUSTRATIVE USE ONLY

THIS DIAGRAM DEVELOPED FROM FLOW DIAGRAM M2-0229 SH A

TU ELECTRIC
CPSES UNIT 2

INSERVICE INSPECTION BOUNDARY DIAGRAM

COMPONENT COOLING WATER SYSTEM
SHEET 3 OF 9

REV 2 | APPROVED: SIGNED COPY ON FILE

ECC229032.ISI

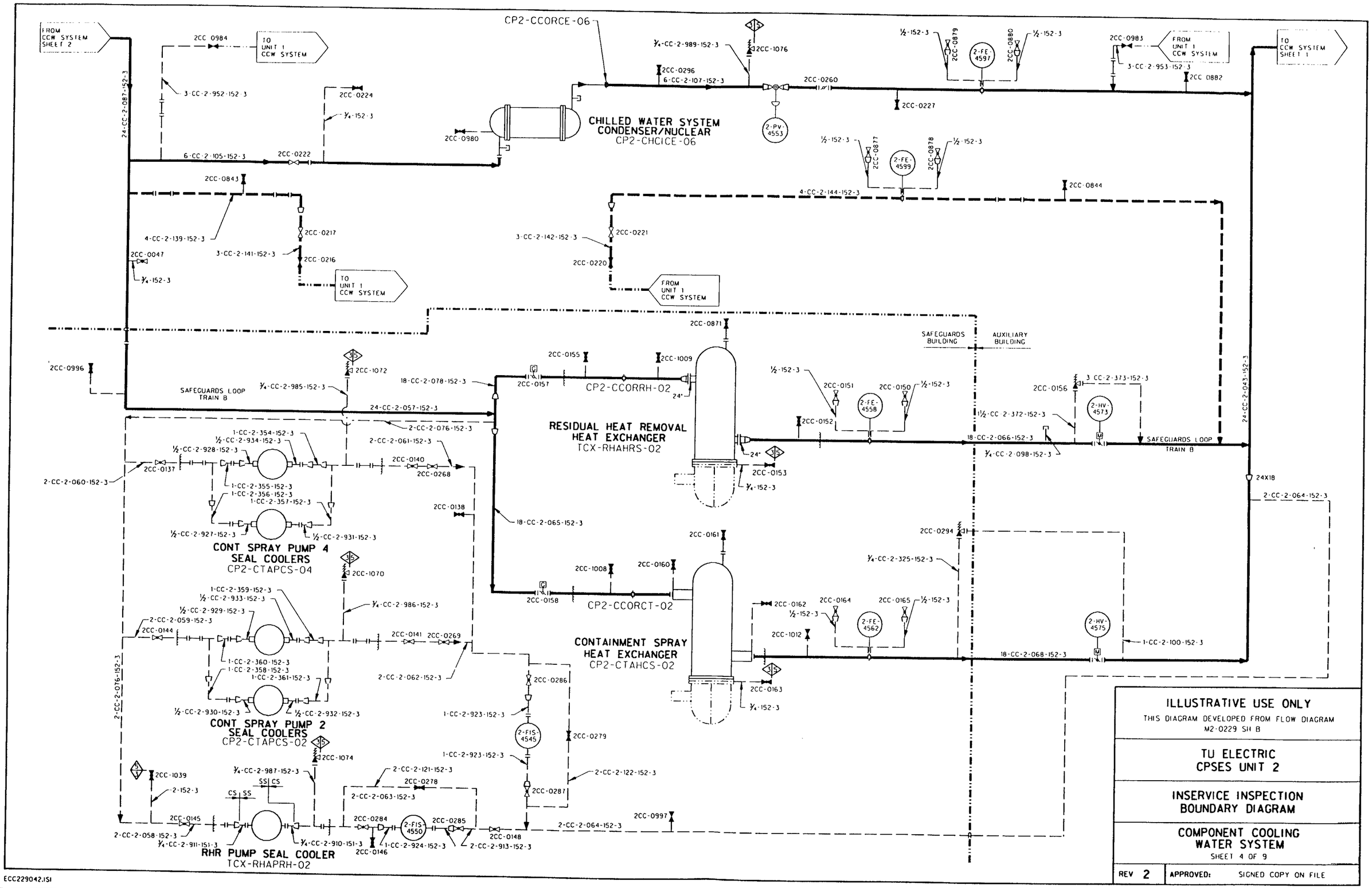

ILLUSTRATIVE USE ONLY

THIS DIAGRAM DEVELOPED FROM FLOW DIAGRAM M2-0229 SH 8

TU ELECTRIC
CPSES UNIT 2

INSERVICE INSPECTION BOUNDARY DIAGRAM

COMPONENT COOLING WATER SYSTEM

SHEET 4 OF 9

REV 2 | APPROVED: SIGNED COPY ON FILE

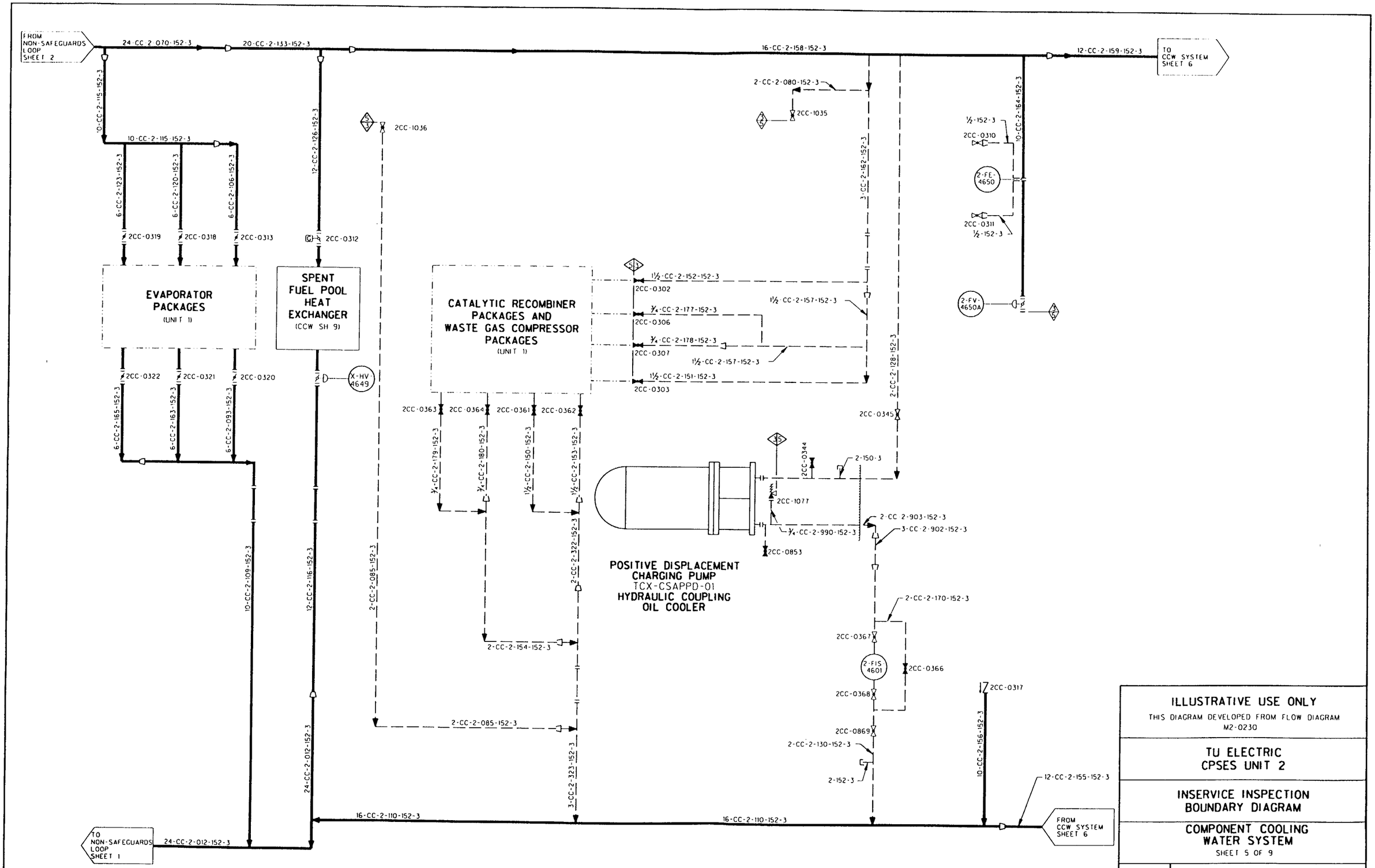

ILLUSTRATIVE USE ONLY

THIS DIAGRAM DEVELOPED FROM FLOW DIAGRAM M2-0230

TU ELECTRIC
CPSES UNIT 2

INSERVICE INSPECTION BOUNDARY DIAGRAM

COMPONENT COOLING WATER SYSTEM

SHEET 5 OF 9

REV 2 | APPROVED: SIGNED COPY ON FILE

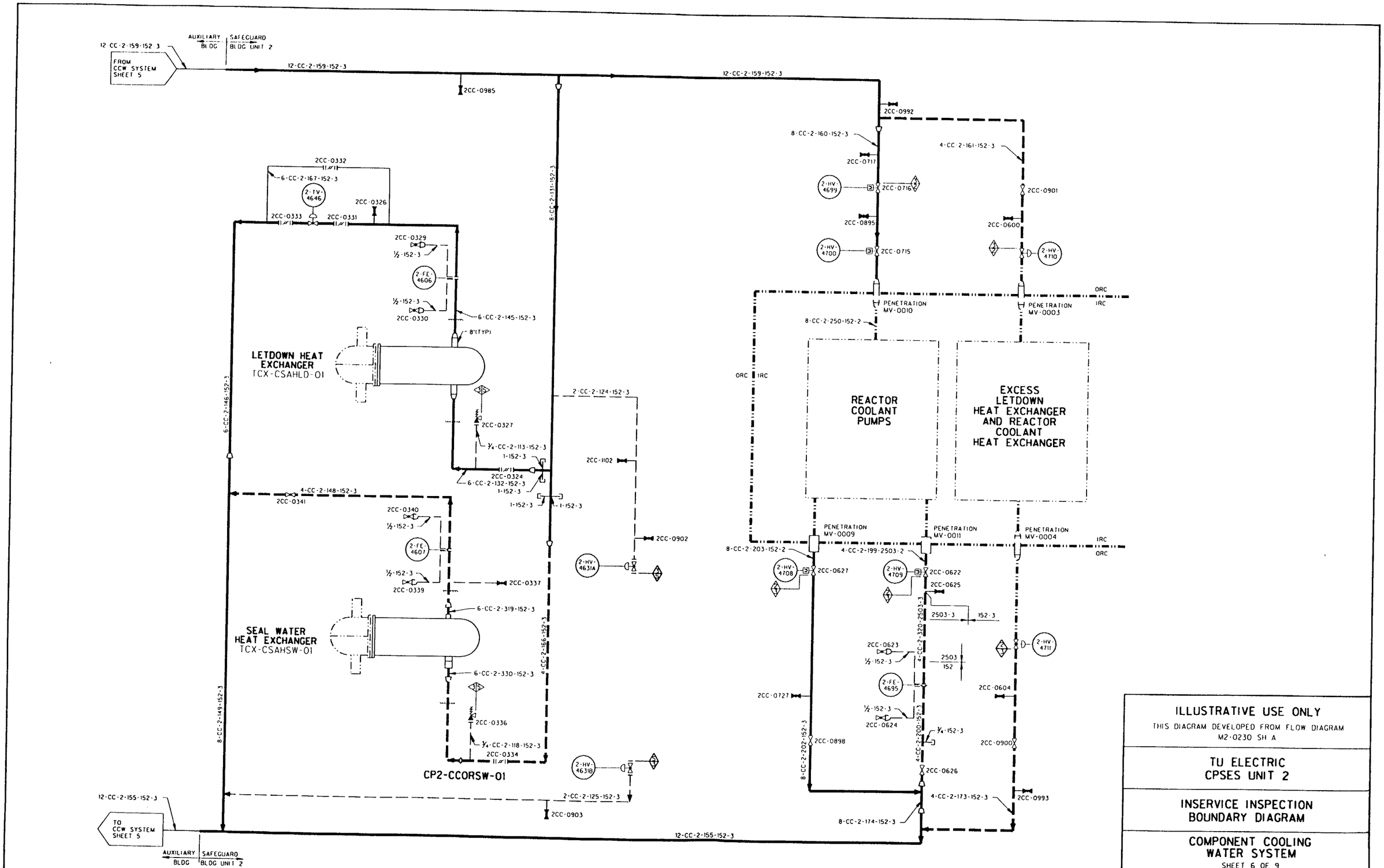

ILLUSTRATIVE USE ONLY

THIS DIAGRAM DEVELOPED FROM FLOW DIAGRAM M2-0230 SH A

TU ELECTRIC
CPSES UNIT 2

INSERVICE INSPECTION BOUNDARY DIAGRAM

COMPONENT COOLING WATER SYSTEM
SHEET 6 OF 9

REV 2 | APPROVED: SIGNED COPY ON FILE

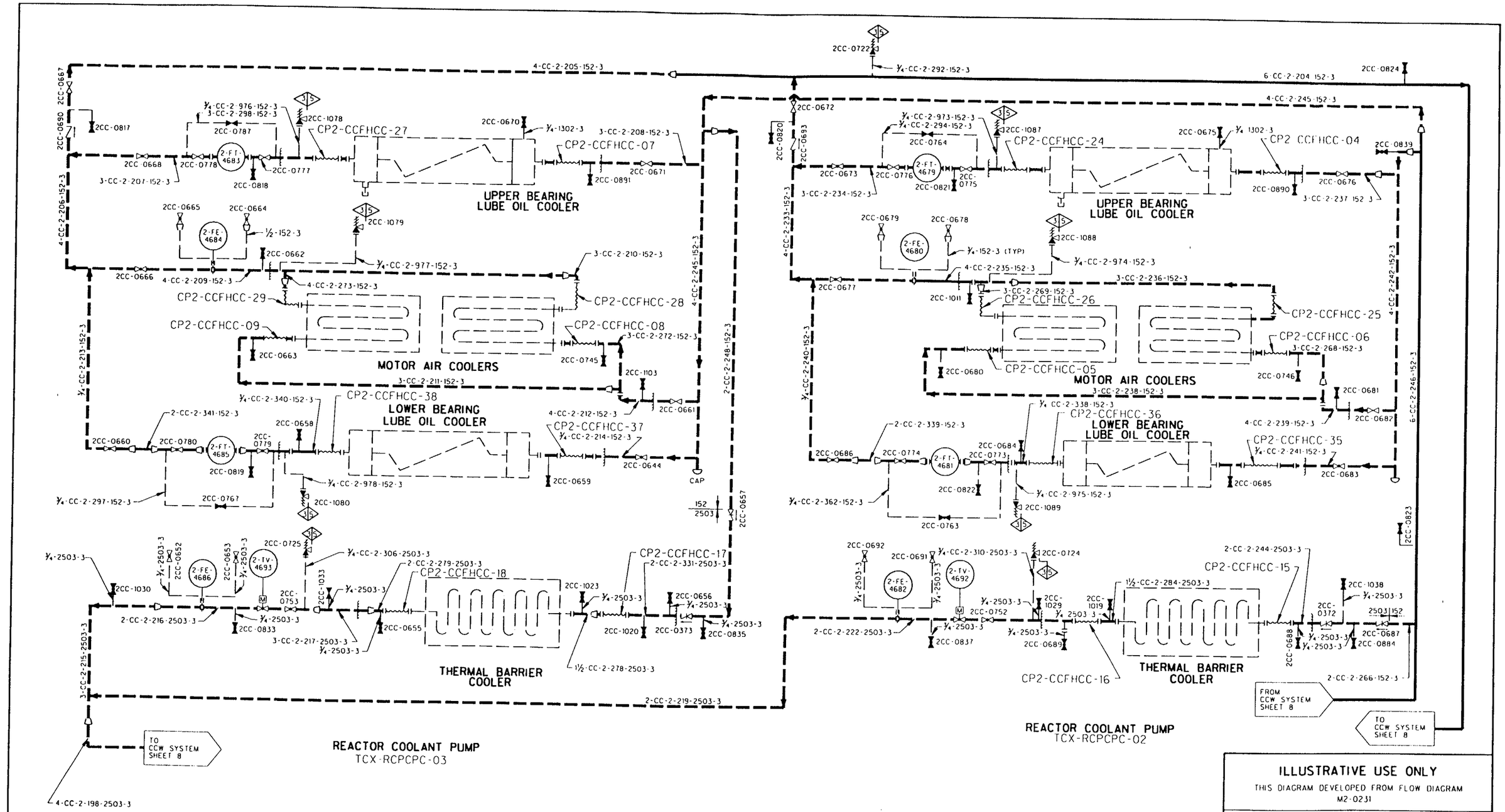

ECC231072.1S1

ILLUSTRATIVE USE ONLY

THIS DIAGRAM DEVELOPED FROM FLOW DIAGRAM M2-0231

TU ELECTRIC
CPSES UNIT 2

INSERVICE INSPECTION BOUNDARY DIAGRAM

COMPONENT COOLING WATER SYSTEM
SHEET 7 OF 9

REV 2 | APPROVED: SIGNED COPY ON FILE

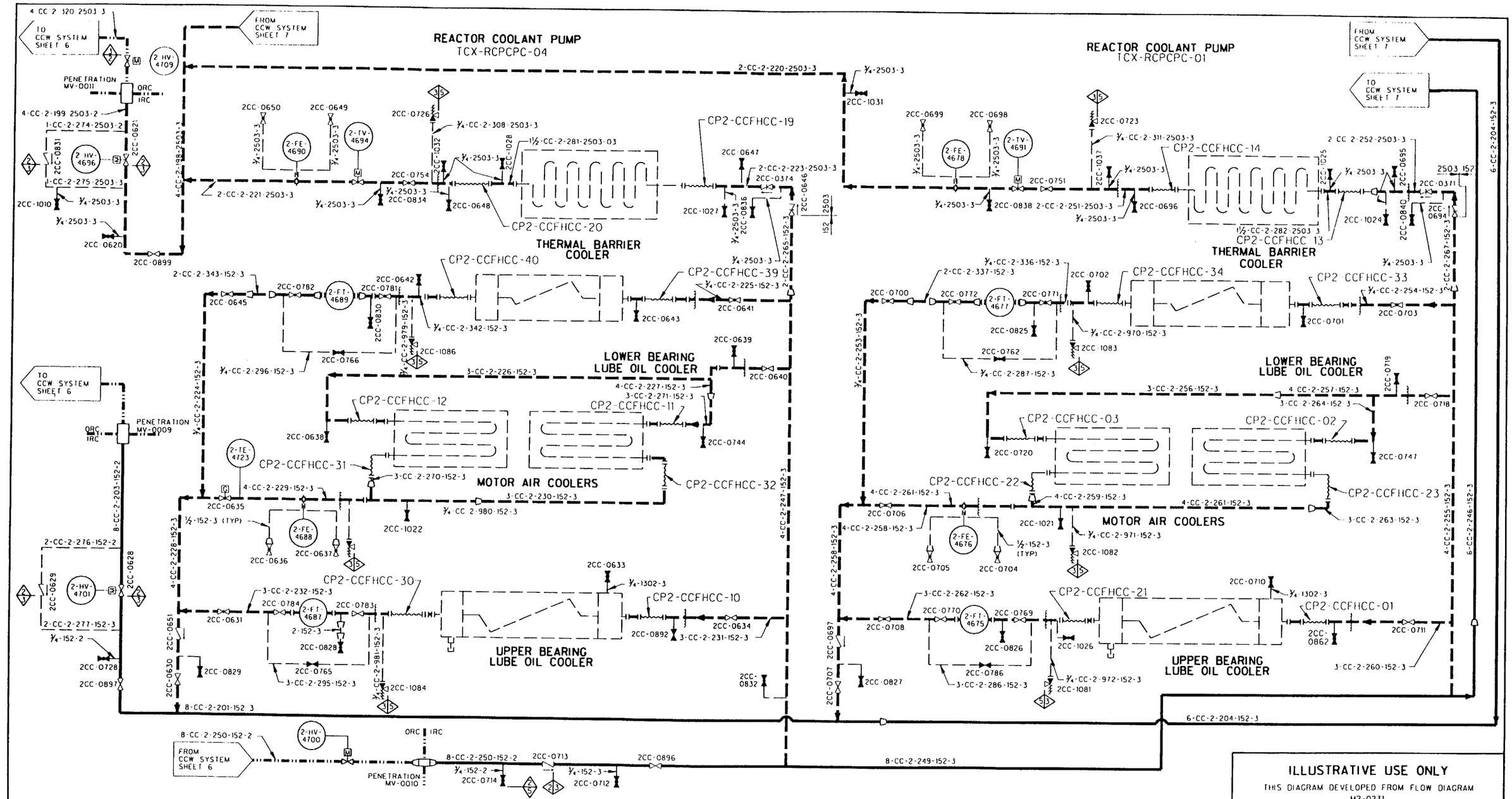

ILLUSTRATIVE USE ONLY

THIS DIAGRAM DEVELOPED FROM FLOW DIAGRAM M2-0231

TU ELECTRIC
CPSES UNIT 2

INSERVICE INSPECTION BOUNDARY DIAGRAM

COMPONENT COOLING WATER SYSTEM
SHEET 8 OF 9

REV 2 | APPROVED: SIGNED COPY ON FILE

ECC231082.1SI

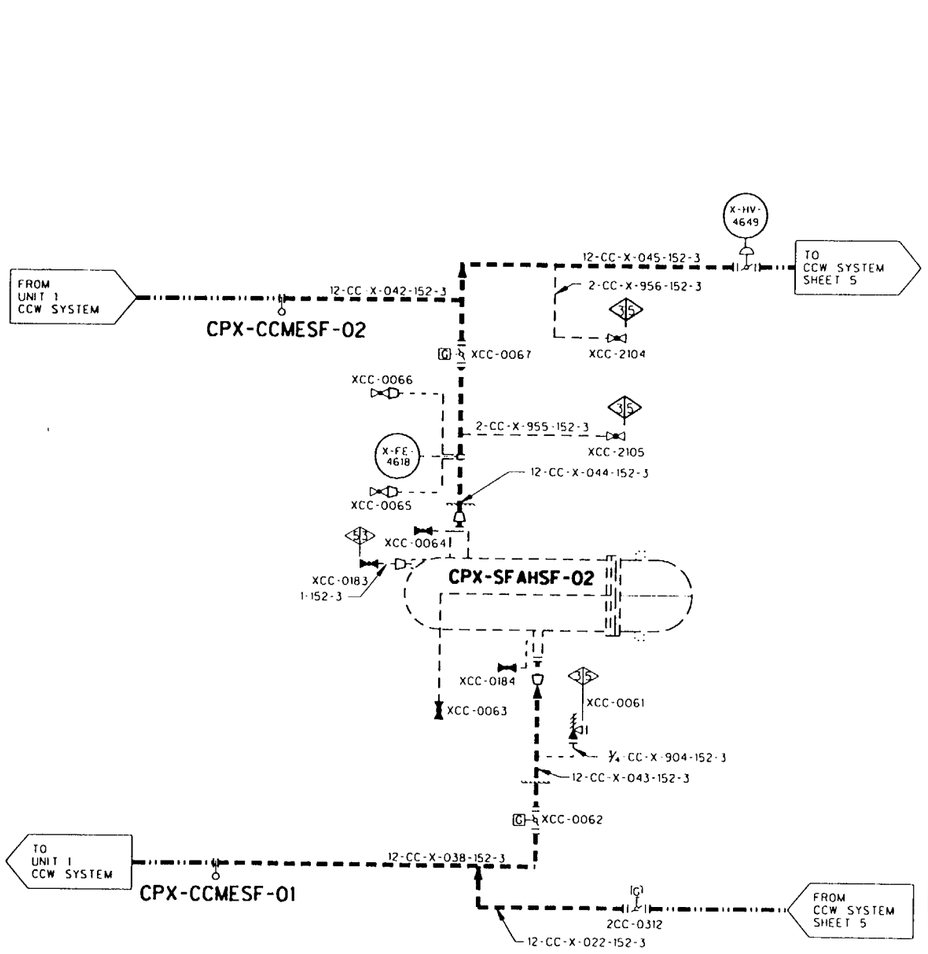

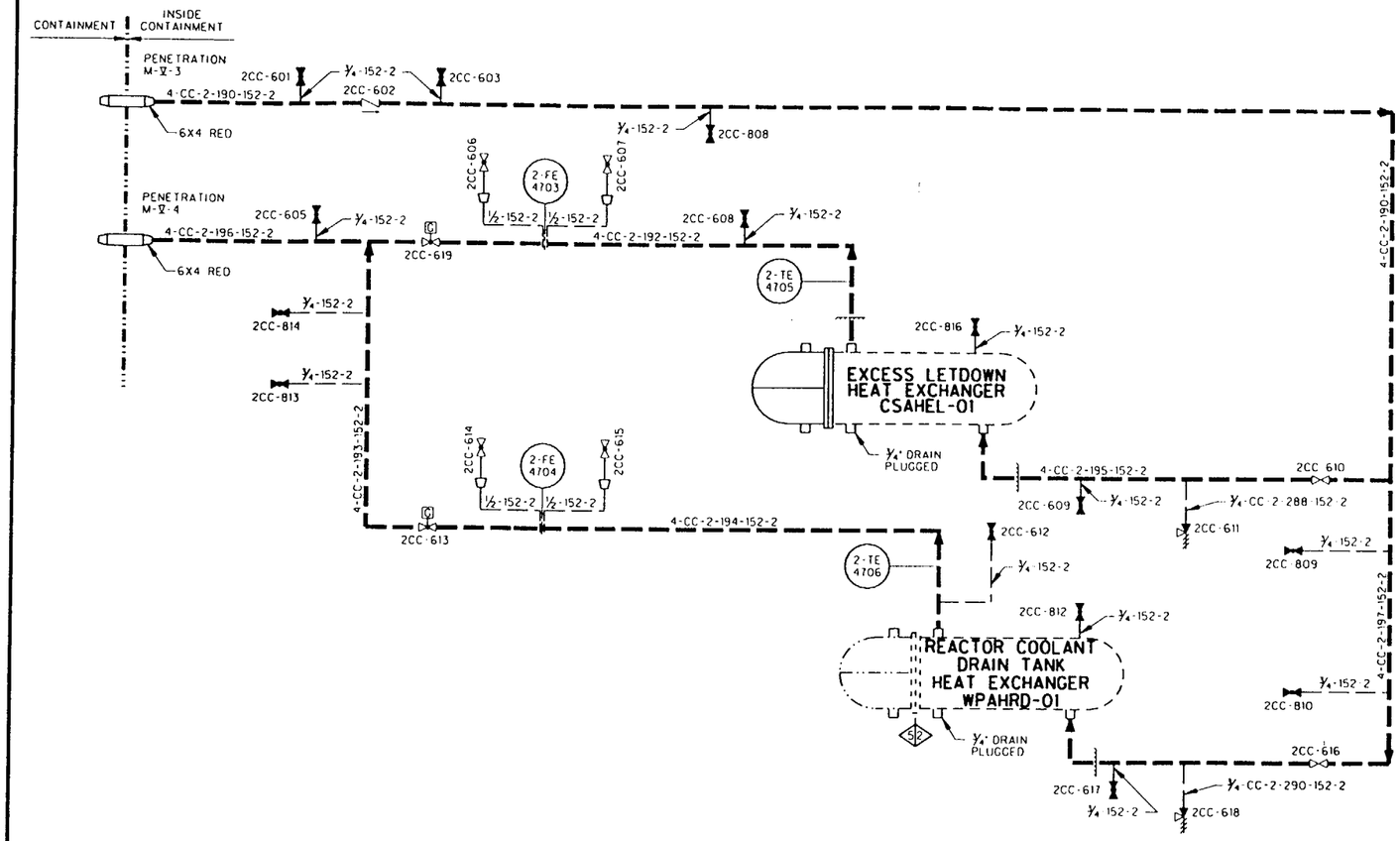

ILLUSTRATIVE USE ONLY

THIS DIAGRAM DEVELOPED FROM FLOW DIAGRAM M1-0230 AND M2-0231

TU ELECTRIC
CPSES UNIT 2

INSERVICE INSPECTION BOUNDARY DIAGRAM

COMPONENT COOLING WATER SYSTEM
SHEET 9 OF 9

REV 4	APPROVED: SIGNED COPY ON FILE

ECC230102.151

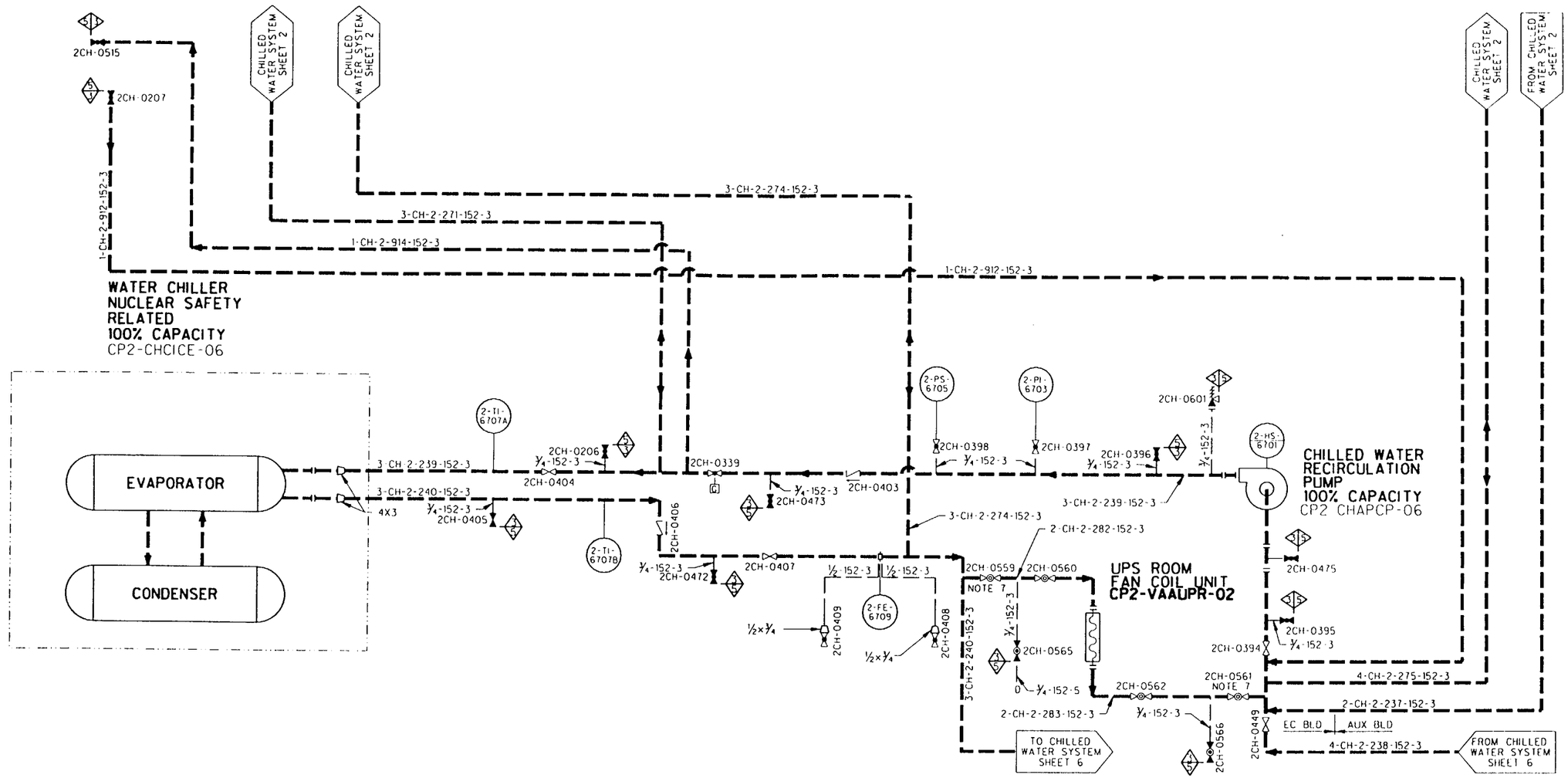

ILLUSTRATIVE USE ONLY

THIS DIAGRAM DEVELOPED FROM FLOW DIAGRAM M2-0311

TU ELECTRIC
CPSES UNIT 2

INSERVICE INSPECTION
BOUNDARY DIAGRAM

CHILLED WATER SYSTEM
SHEET 1 OF 7

REV 1 | APPROVED: SIGNED COPY ON FILE

ECH311011.1SI

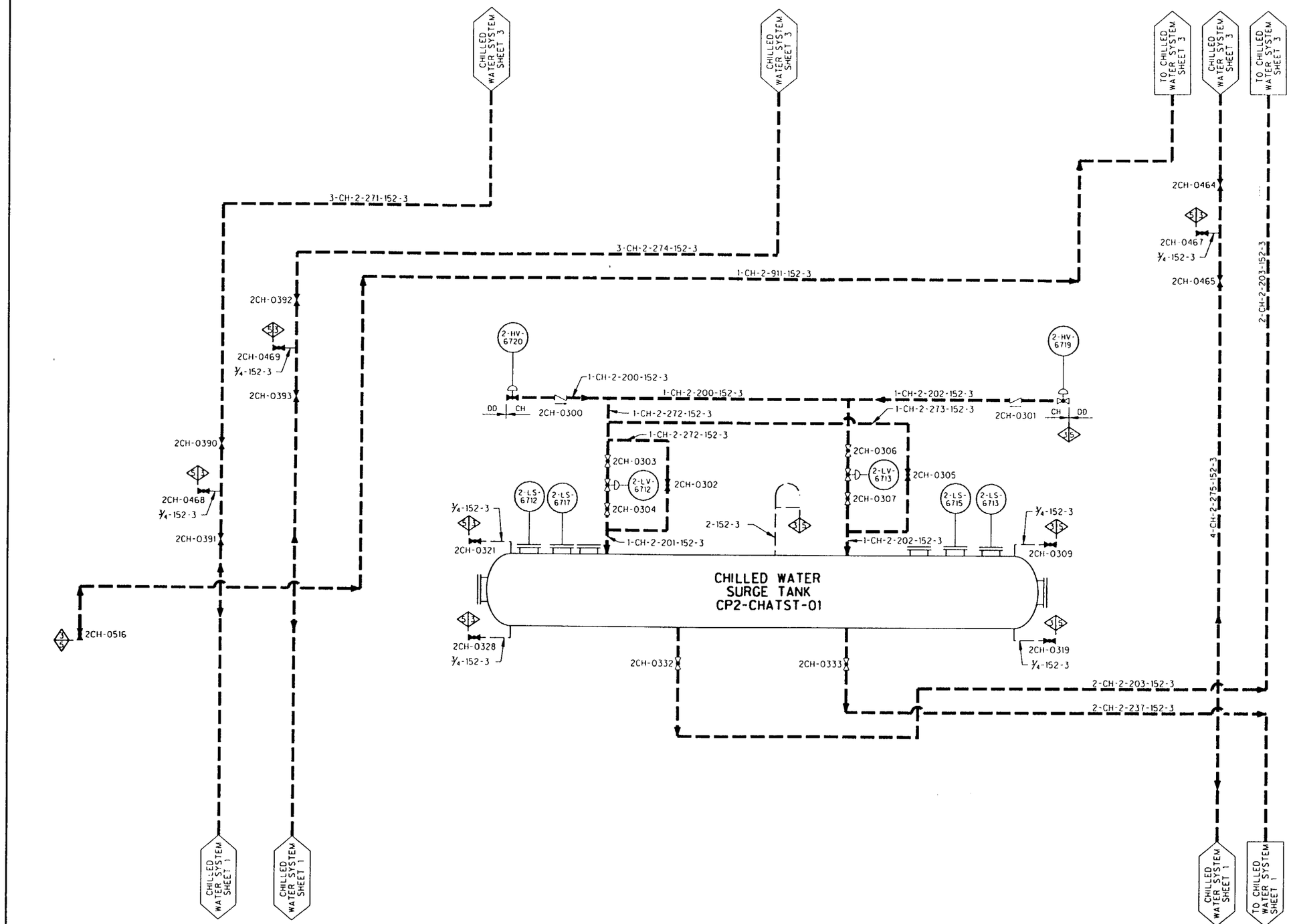

ILLUSTRATIVE USE ONLY

THIS DIAGRAM DEVELOPED FROM FLOW DIAGRAM M2-0311

TU ELECTRIC
CPSES UNIT 2

INSERVICE INSPECTION
BOUNDARY DIAGRAM

CHILLED WATER SYSTEM
SHEET 2 OF 7

REV 1 | APPROVED: SIGNED COPY ON FILE

ECH311021.1S1

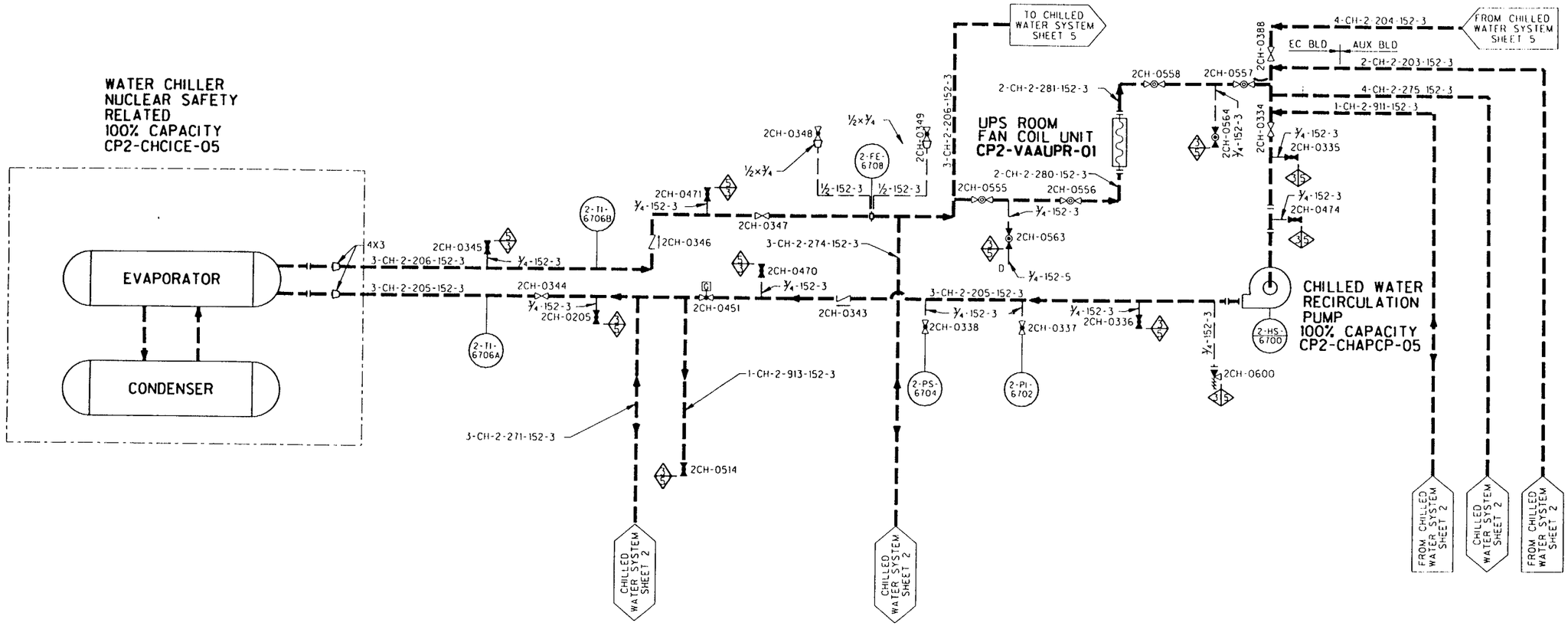

ILLUSTRATIVE USE ONLY

THIS DIAGRAM DEVELOPED FROM FLOW DIAGRAM M2-0311

TU ELECTRIC
CPSES UNIT 2

INSERVICE INSPECTION
BOUNDARY DIAGRAM

CHILLED WATER SYSTEM
SHEET 3 OF 7

REV	1	APPROVED:	SIGNED COPY ON FILE

ECH311031.ISI

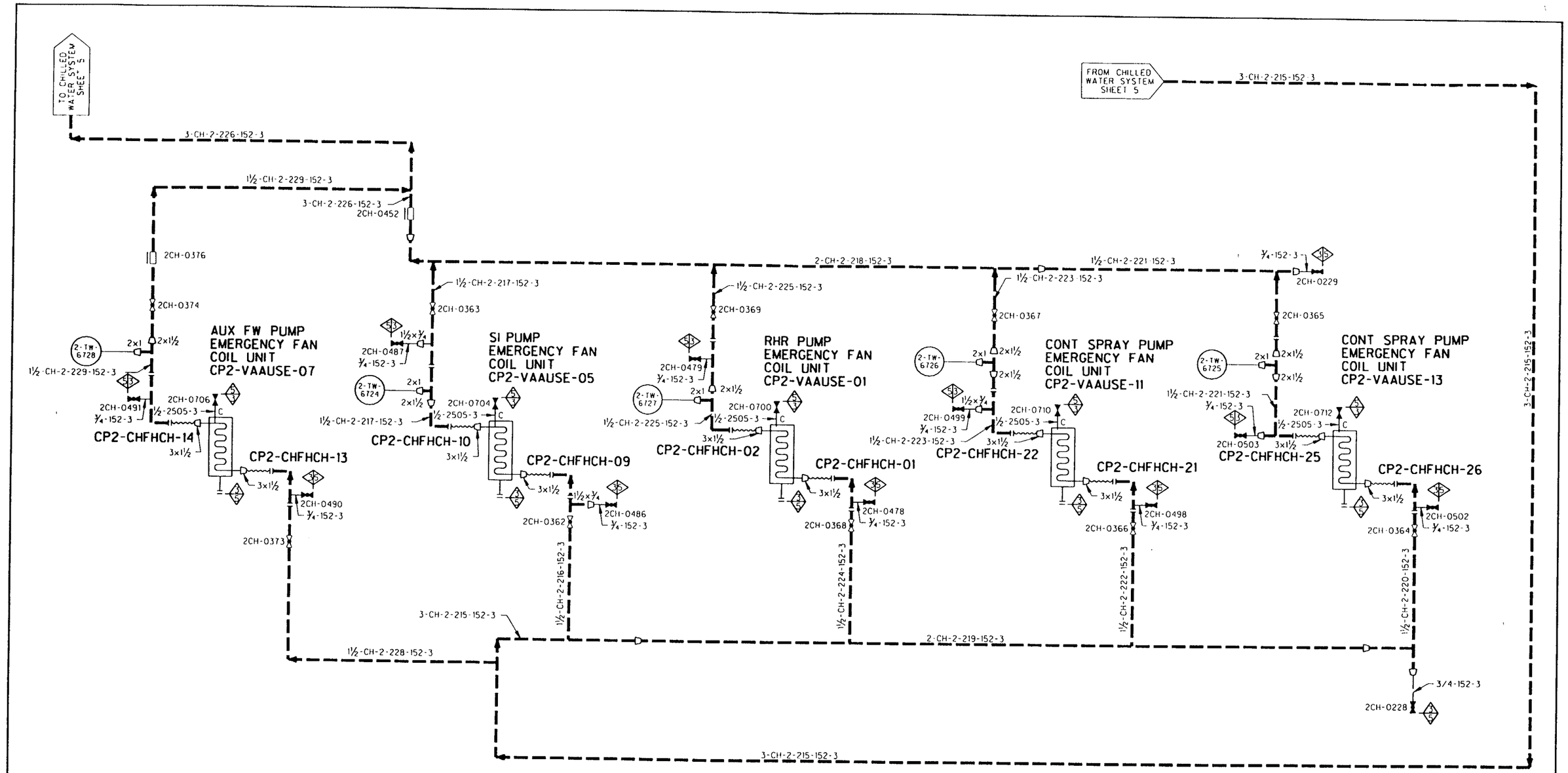

ILLUSTRATIVE USE ONLY

THIS DIAGRAM DEVELOPED FROM FLOW DIAGRAM M2-0311 SH A

TU ELECTRIC
CPSES UNIT 2

INSERVICE INSPECTION BOUNDARY DIAGRAM

CHILLED WATER SYSTEM
SHEET 4 OF 7

REV 1	APPROVED: SIGNED COPY ON FILE

ECH311041.1S1

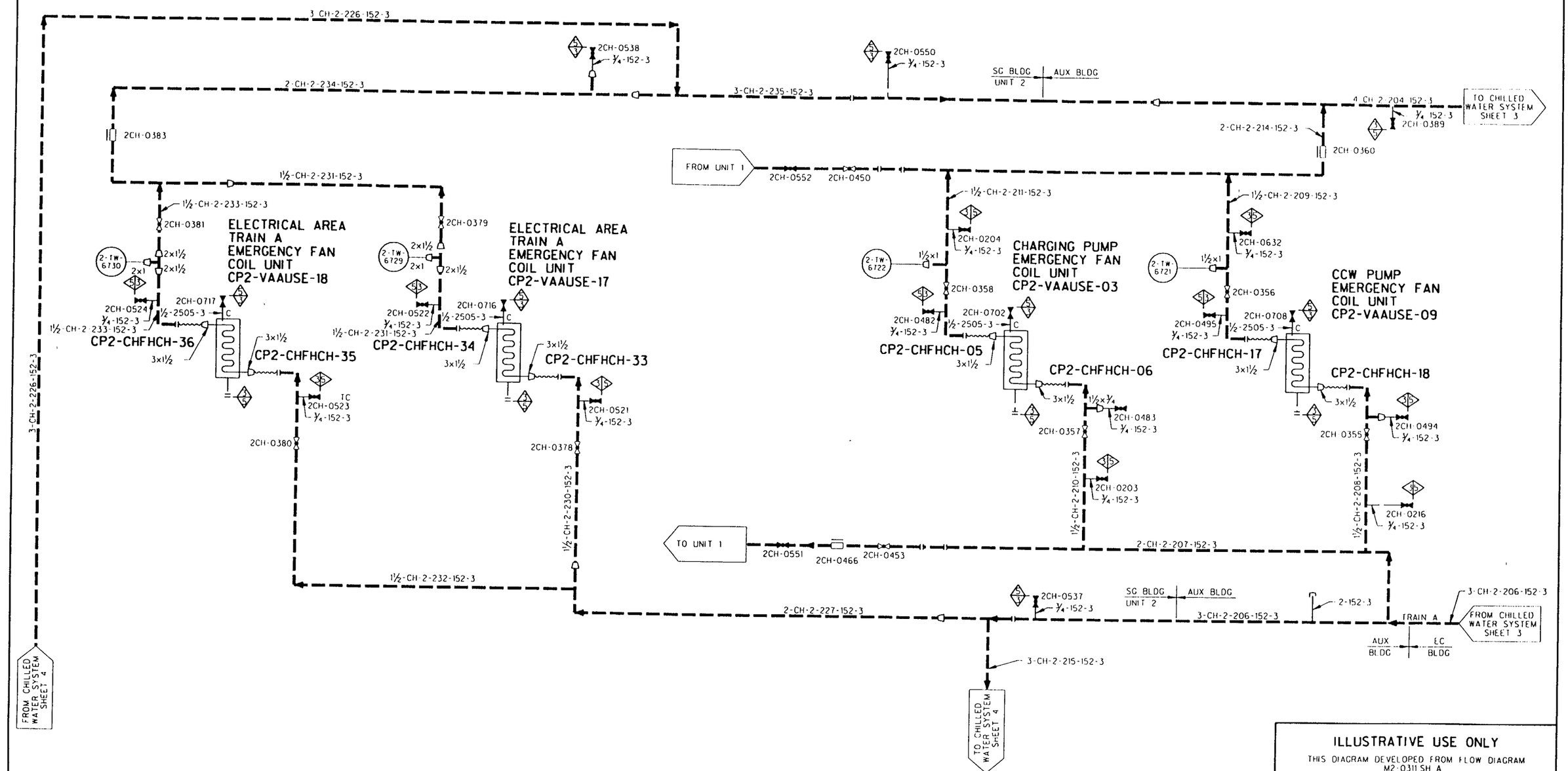

ILLUSTRATIVE USE ONLY

THIS DIAGRAM DEVELOPED FROM FLOW DIAGRAM M2-0311 SH A

TU ELECTRIC
CPSES UNIT 2

INSERVICE INSPECTION BOUNDARY DIAGRAM

CHILLED WATER SYSTEM
SHEET 5 OF 7

REV 1 | APPROVED: SIGNED COPY ON FILE

ECH311051.ISI

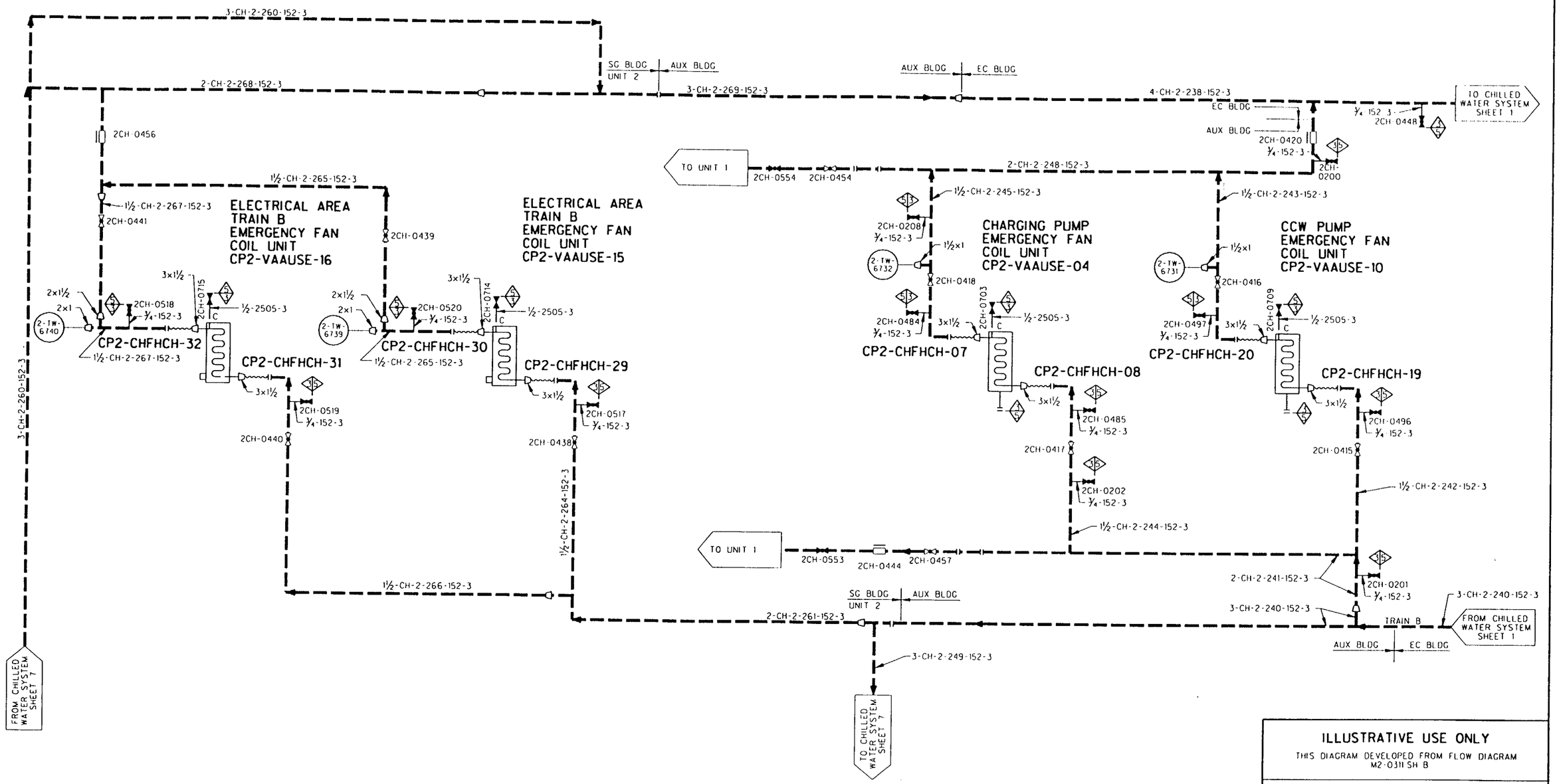

ILLUSTRATIVE USE ONLY

THIS DIAGRAM DEVELOPED FROM FLOW DIAGRAM M2-0311 SH B

TU ELECTRIC
CPSES UNIT 2

INSERVICE INSPECTION BOUNDARY DIAGRAM

CHILLED WATER SYSTEM
SHEET 6 OF 7

REV 1	APPROVED:	SIGNED COPY ON FILE

ECH311061.1S1

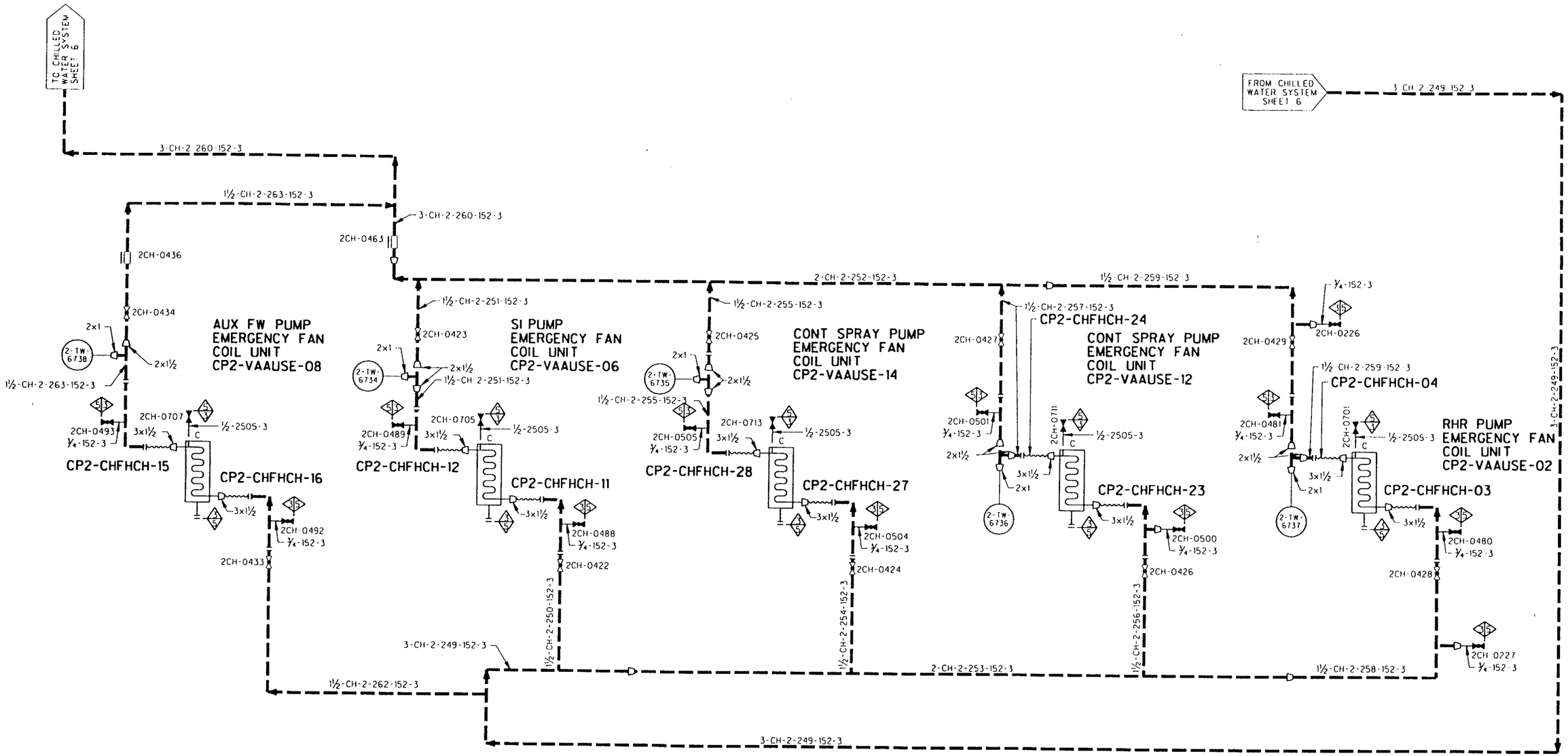

ILLUSTRATIVE USE ONLY

THIS DIAGRAM DEVELOPED FROM FLOW DIAGRAM M2-0311 SH B

TU ELECTRIC
CPSES UNIT 2

INSERVICE INSPECTION BOUNDARY DIAGRAM

CHILLED WATER SYSTEM
SHEET 7 OF 7

REV 1 | APPROVED: SIGNED COPY ON FILE

ECH311071.1S1

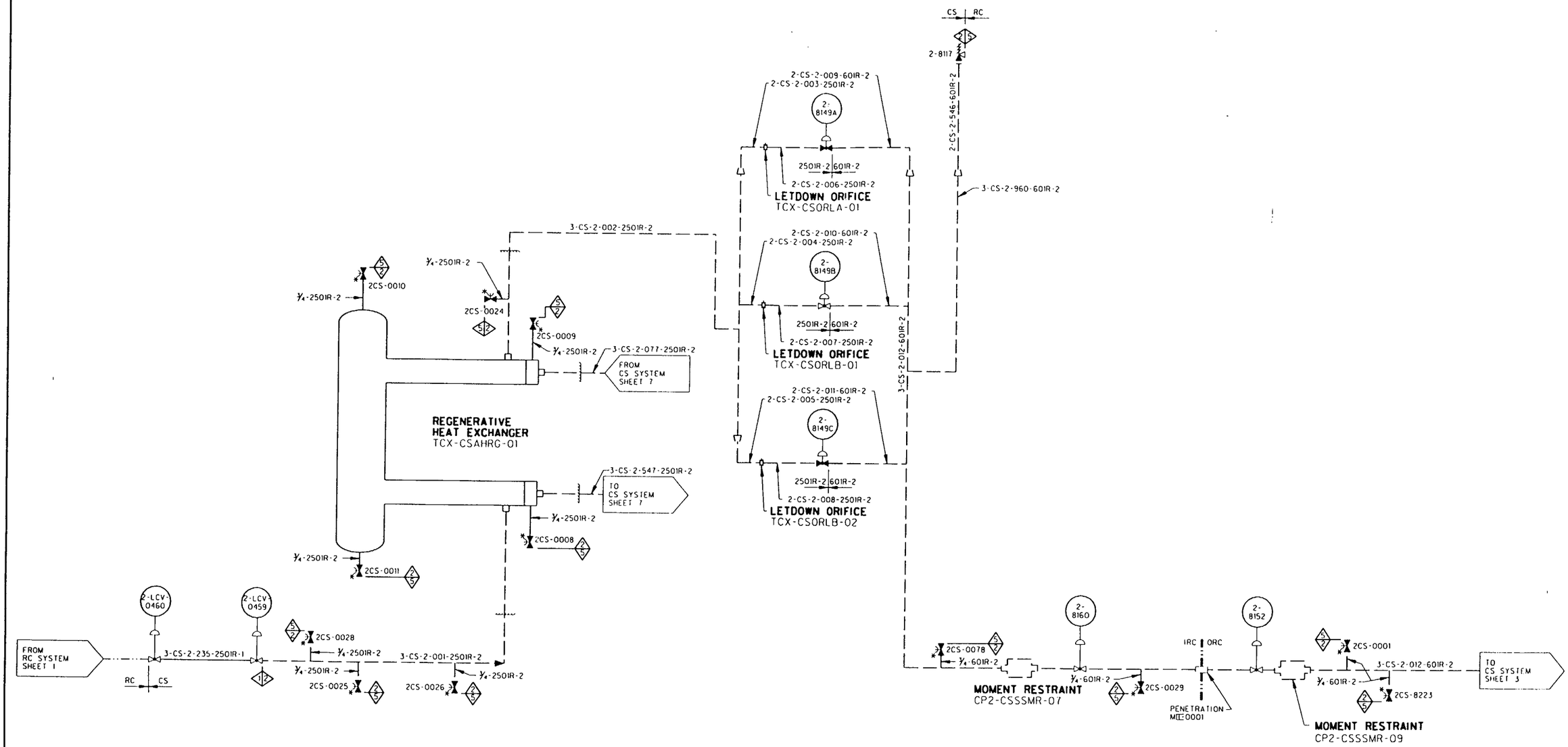

ILLUSTRATIVE USE ONLY

THIS DIAGRAM DEVELOPED FROM FLOW DIAGRAM M2-0253

TU ELECTRIC
CPSES UNIT 2

INSERVICE INSPECTION BOUNDARY DIAGRAM

CHEMICAL AND VOLUME CONTROL SYSTEM
SHEET 1 OF 13

REV 2	APPROVED:	SIGNED COPY ON FILE

ECS253011.JSI

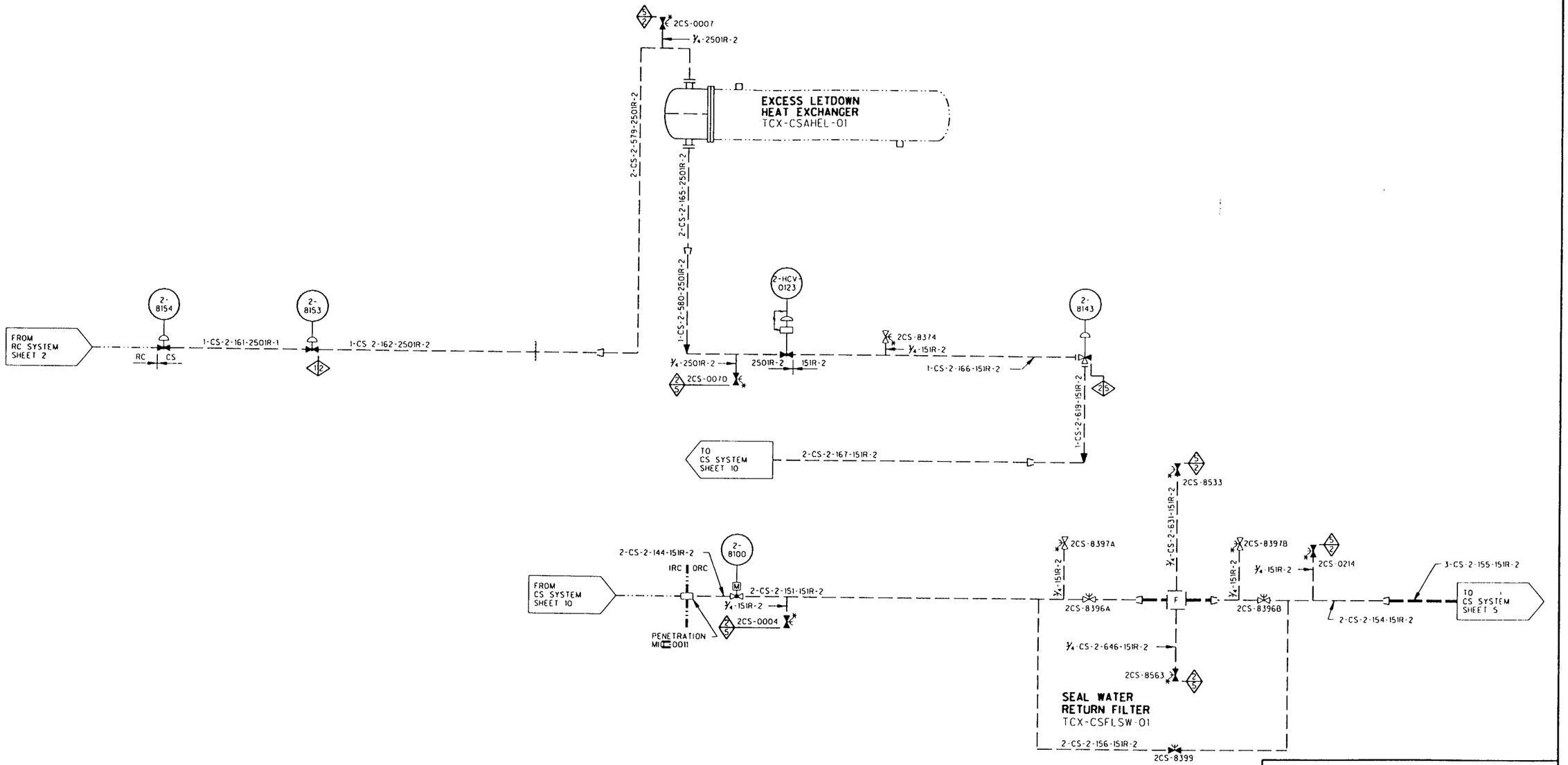

ILLUSTRATIVE USE ONLY

THIS DIAGRAM DEVELOPED FROM FLOW DIAGRAM M2-0253

TU ELECTRIC
CPSES UNIT 2

INSERVICE INSPECTION
BOUNDARY DIAGRAM

CHEMICAL AND VOLUME
CONTROL SYSTEM
SHEET 2 OF 13

REV 2 | APPROVED: SIGNED COPY ON FILE

ECS253021.1SI

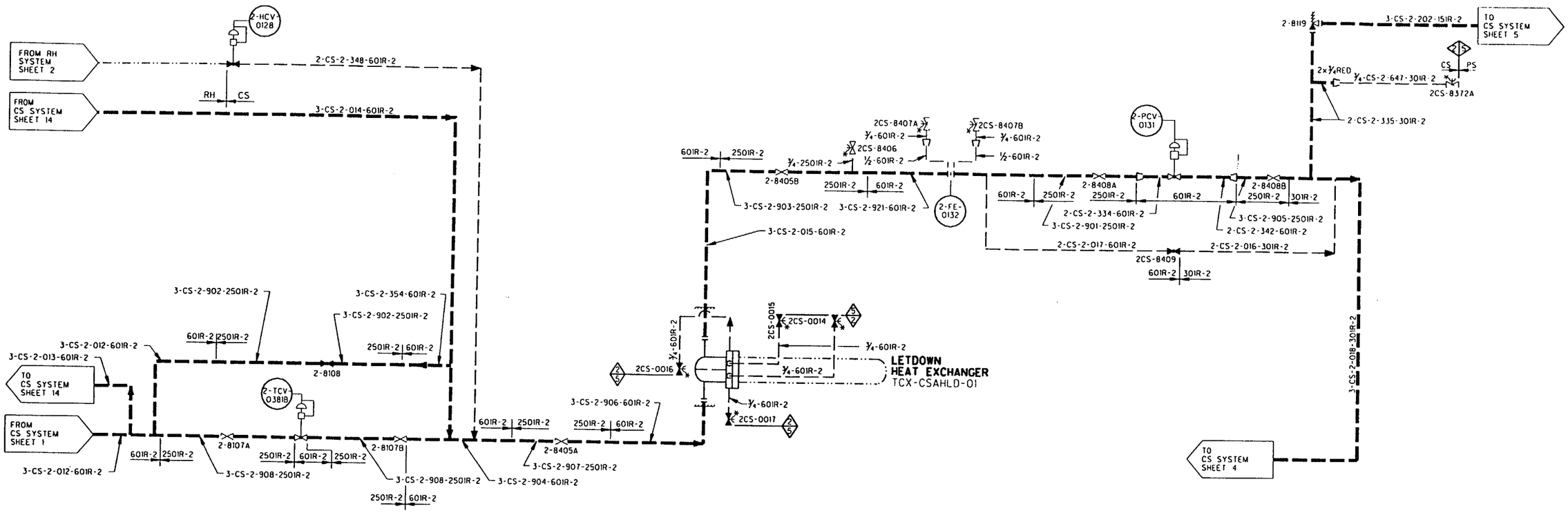

ECS253031.1SI

ILLUSTRATIVE USE ONLY

THIS DIAGRAM DEVELOPED FROM FLOW DIAGRAM M2-0253 SH A

TU ELECTRIC
CPSES UNIT 2

INSERVICE INSPECTION BOUNDARY DIAGRAM

CHEMICAL AND VOLUME CONTROL SYSTEM
SHEET 3 OF 13

REV 2 | APPROVED: SIGNED COPY ON FILE

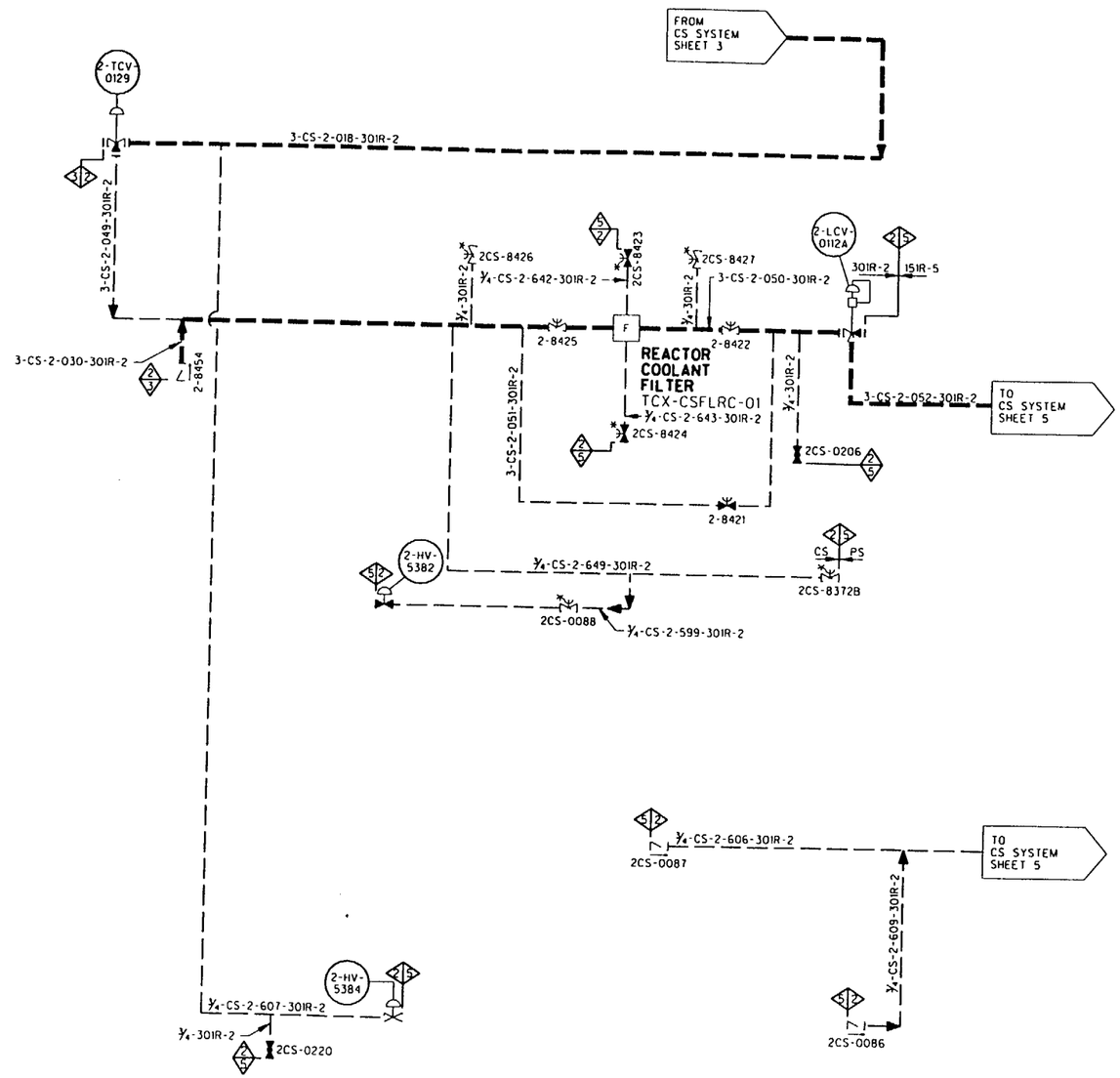

ECS253041.1S1

ILLUSTRATIVE USE ONLY

THIS DIAGRAM DEVELOPED FROM FLOW DIAGRAM M2-0253 SH A

TU ELECTRIC
CPSES UNIT 2

INSERVICE INSPECTION BOUNDARY DIAGRAM

CHEMICAL AND VOLUME CONTROL SYSTEM
SHEET 4 OF 13

REV 2	APPROVED:	SIGNED COPY ON FILE

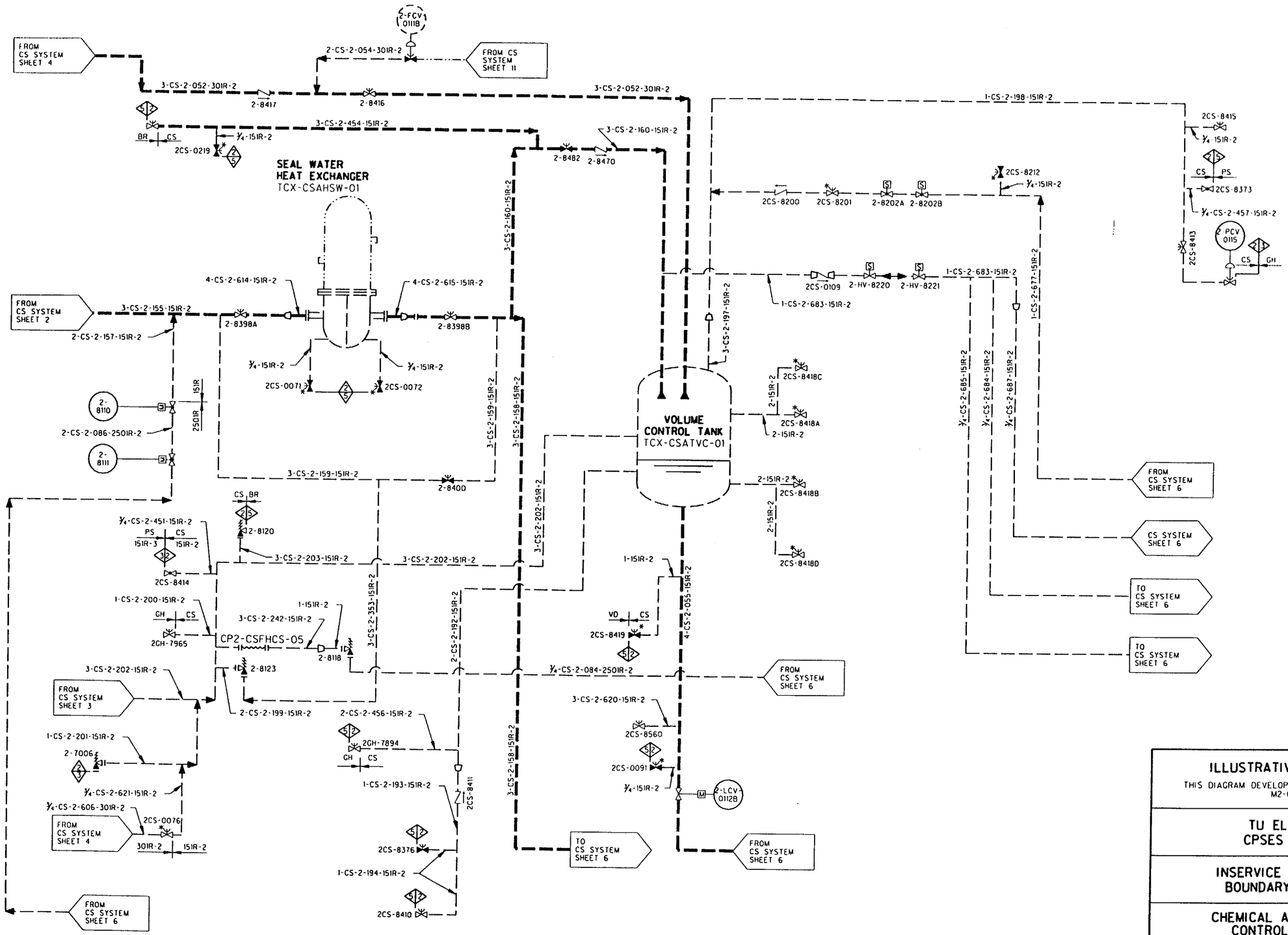

ECS254051.1S1

ILLUSTRATIVE USE ONLY

THIS DIAGRAM DEVELOPED FROM FLOW DIAGRAM M2-0254

TU ELECTRIC
CPSES UNIT 2

INSERVICE INSPECTION BOUNDARY DIAGRAM

CHEMICAL AND VOLUME CONTROL SYSTEM
SHEET 5 OF 13

REV 2 | APPROVED: SIGNED COPY ON FILE

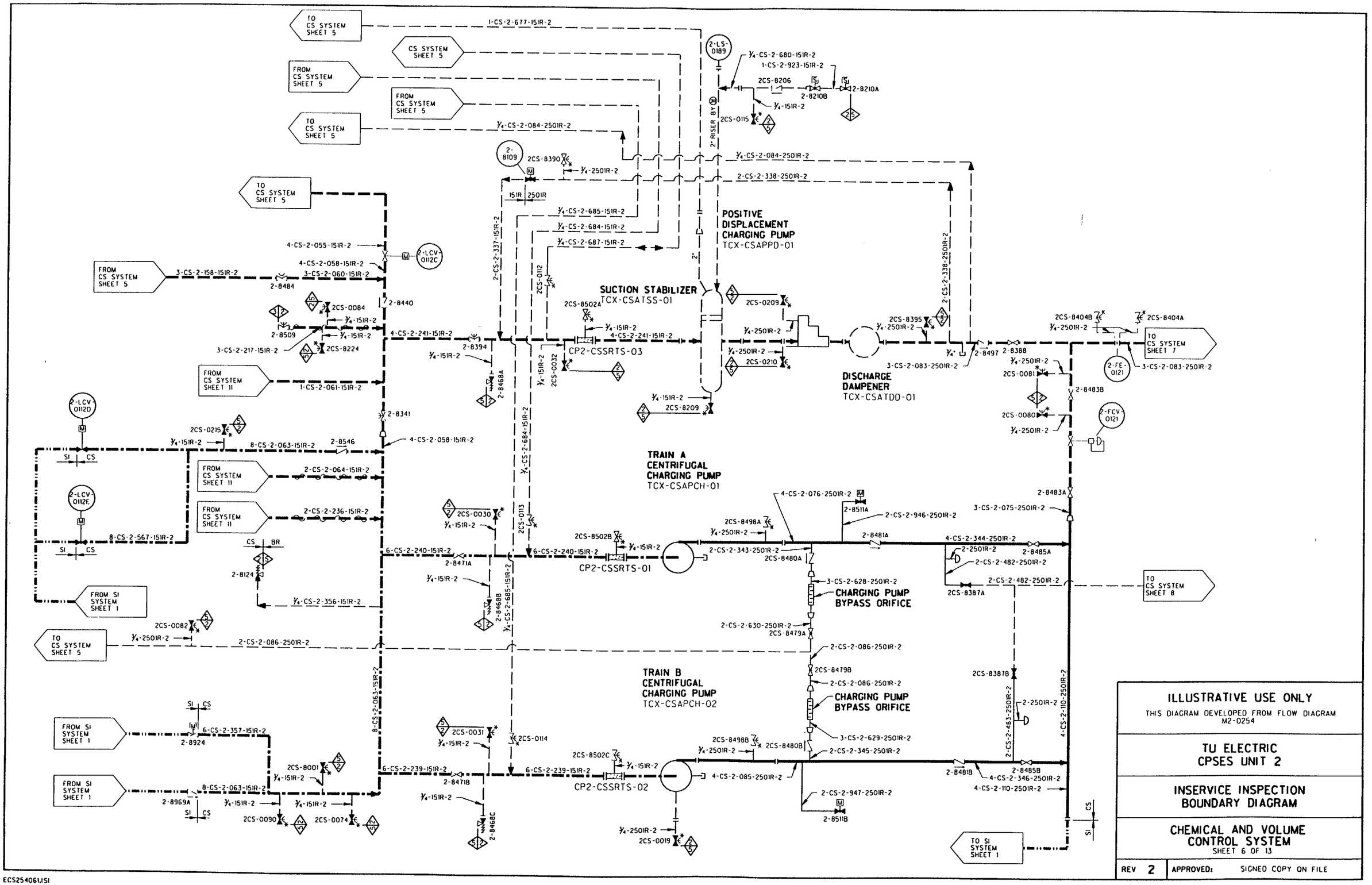

ILLUSTRATIVE USE ONLY

THIS DIAGRAM DEVELOPED FROM FLOW DIAGRAM M2-0254

TU ELECTRIC
CPSES UNIT 2

INSERVICE INSPECTION BOUNDARY DIAGRAM

CHEMICAL AND VOLUME CONTROL SYSTEM
SHEET 6 OF 13

REV 2 | APPROVED: SIGNED COPY ON FILE

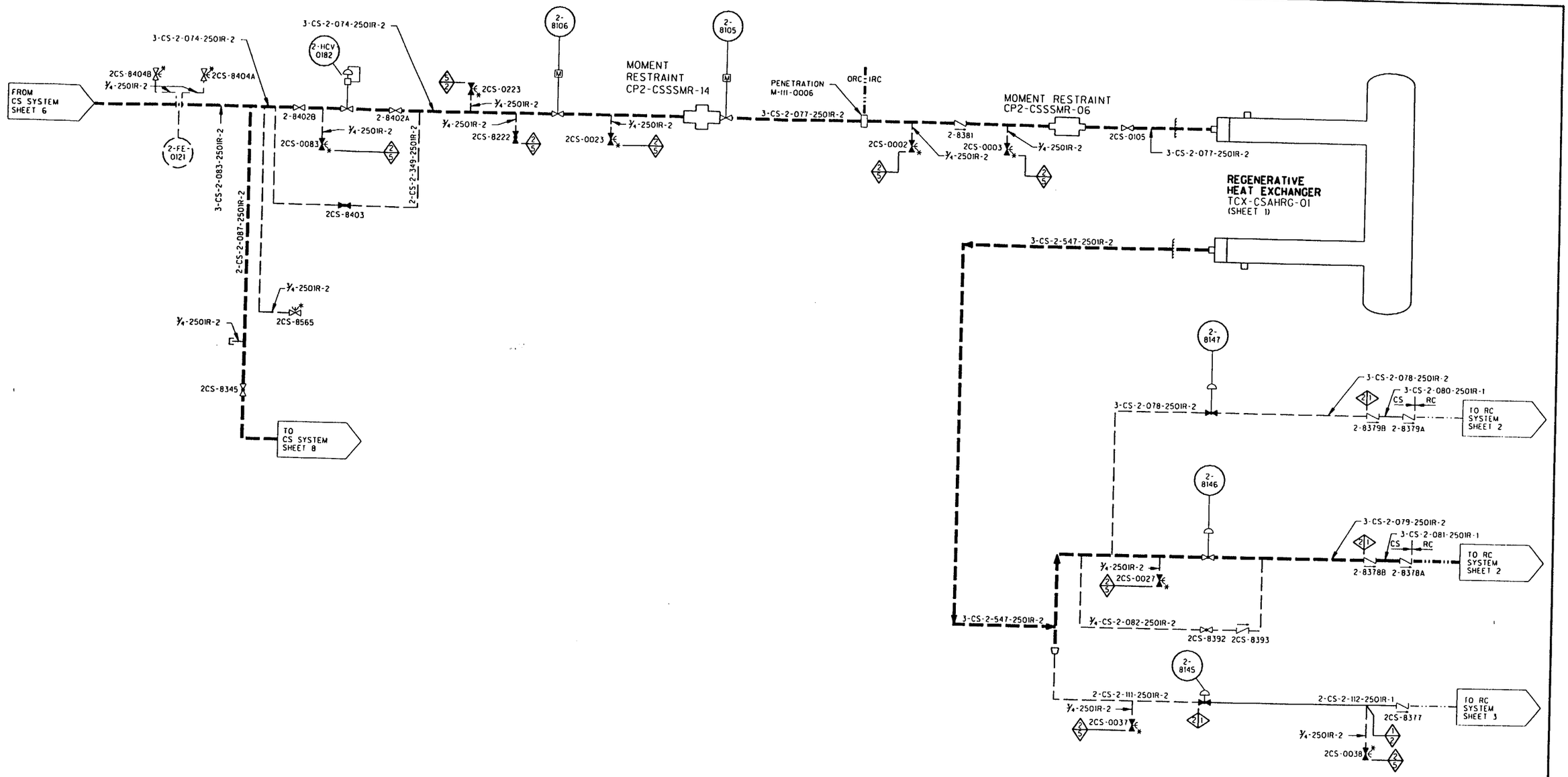

ILLUSTRATIVE USE ONLY

THIS DIAGRAM DEVELOPED FROM FLOW DIAGRAM M2-0255

TU ELECTRIC
CPSES UNIT 2

INSERVICE INSPECTION BOUNDARY DIAGRAM

CHEMICAL AND VOLUME CONTROL SYSTEM
SHEET 7 OF 13

REV 2 | APPROVED: SIGNED COPY ON FILE

ECS255071.ISI

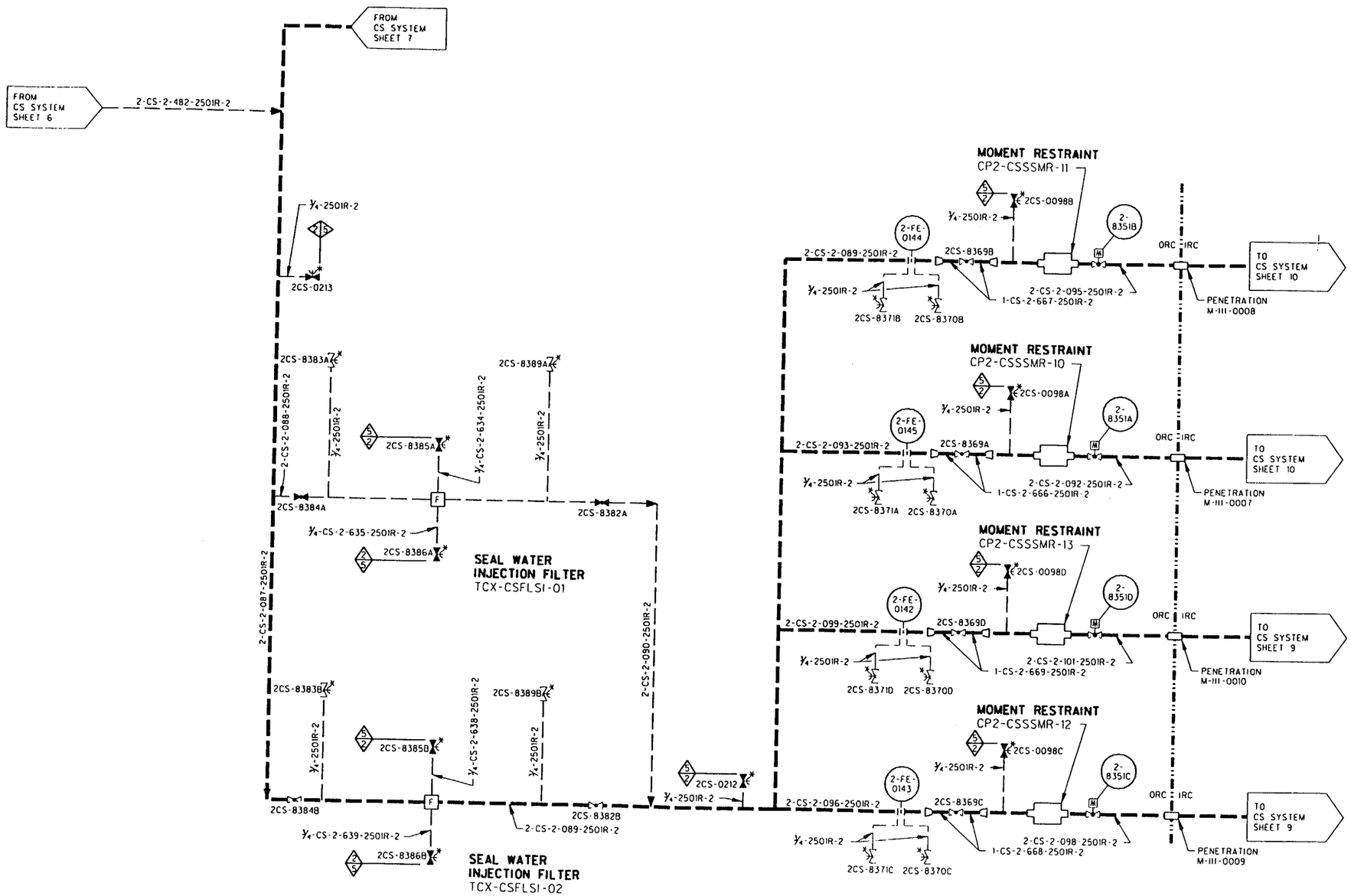

ILLUSTRATIVE USE ONLY

THIS DIAGRAM DEVELOPED FROM FLOW DIAGRAM M2-0255

TU ELECTRIC
CPSES UNIT 2

INSERVICE INSPECTION BOUNDARY DIAGRAM

CHEMICAL AND VOLUME CONTROL SYSTEM
SHEET 8 OF 13

REV 2 | APPROVED: SIGNED COPY ON FILE

ECS255081.ISI

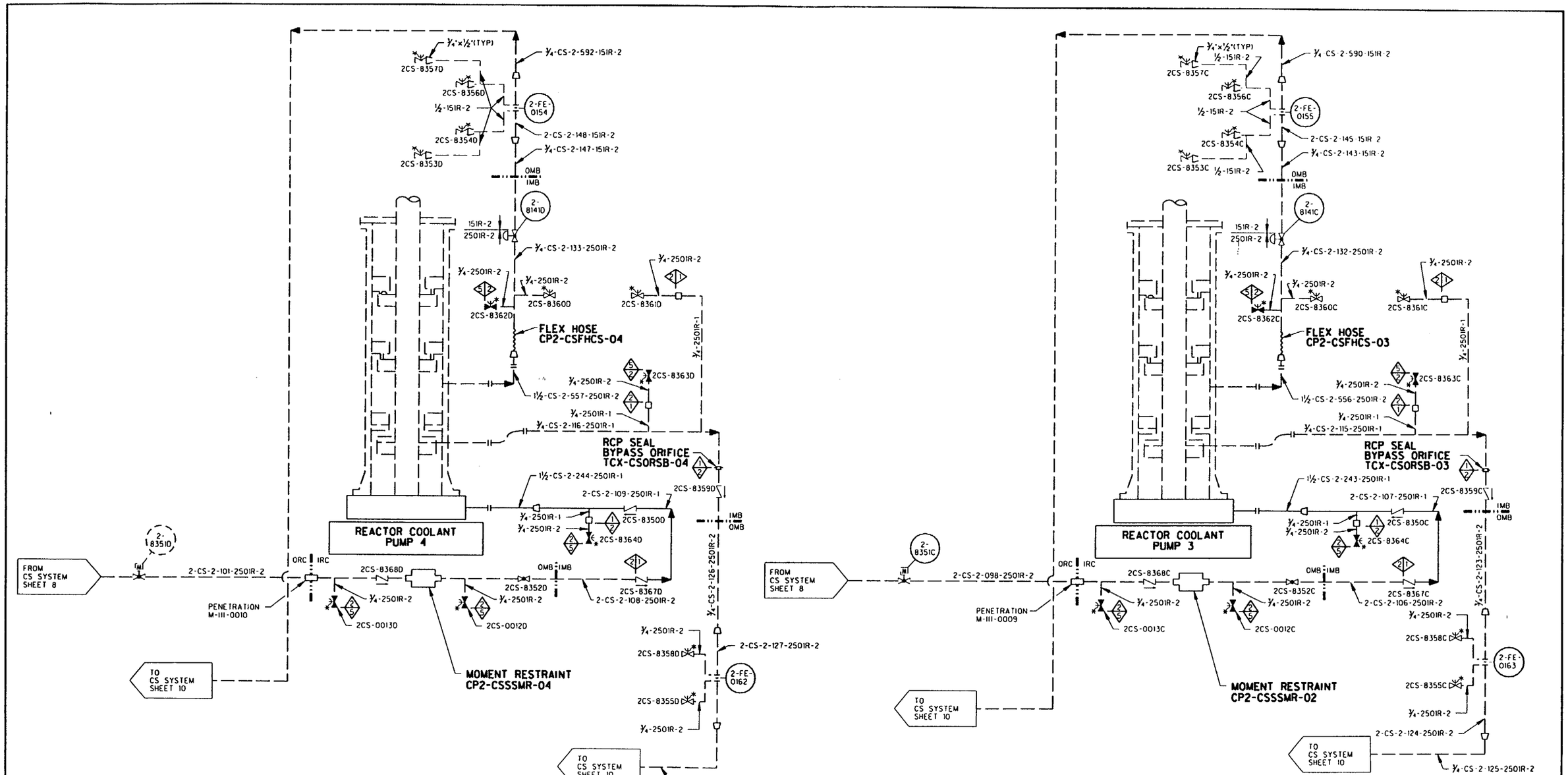

ILLUSTRATIVE USE ONLY

THIS DIAGRAM DEVELOPED FROM FLOW DIAGRAM M2-0255 SH 01

TU ELECTRIC
CPSES UNIT 2

INSERVICE INSPECTION BOUNDARY DIAGRAM

CHEMICAL AND VOLUME CONTROL SYSTEM
SHEET 9 OF 13

REV 2 | APPROVED: SIGNED COPY ON FILE

ECS255091.ISI

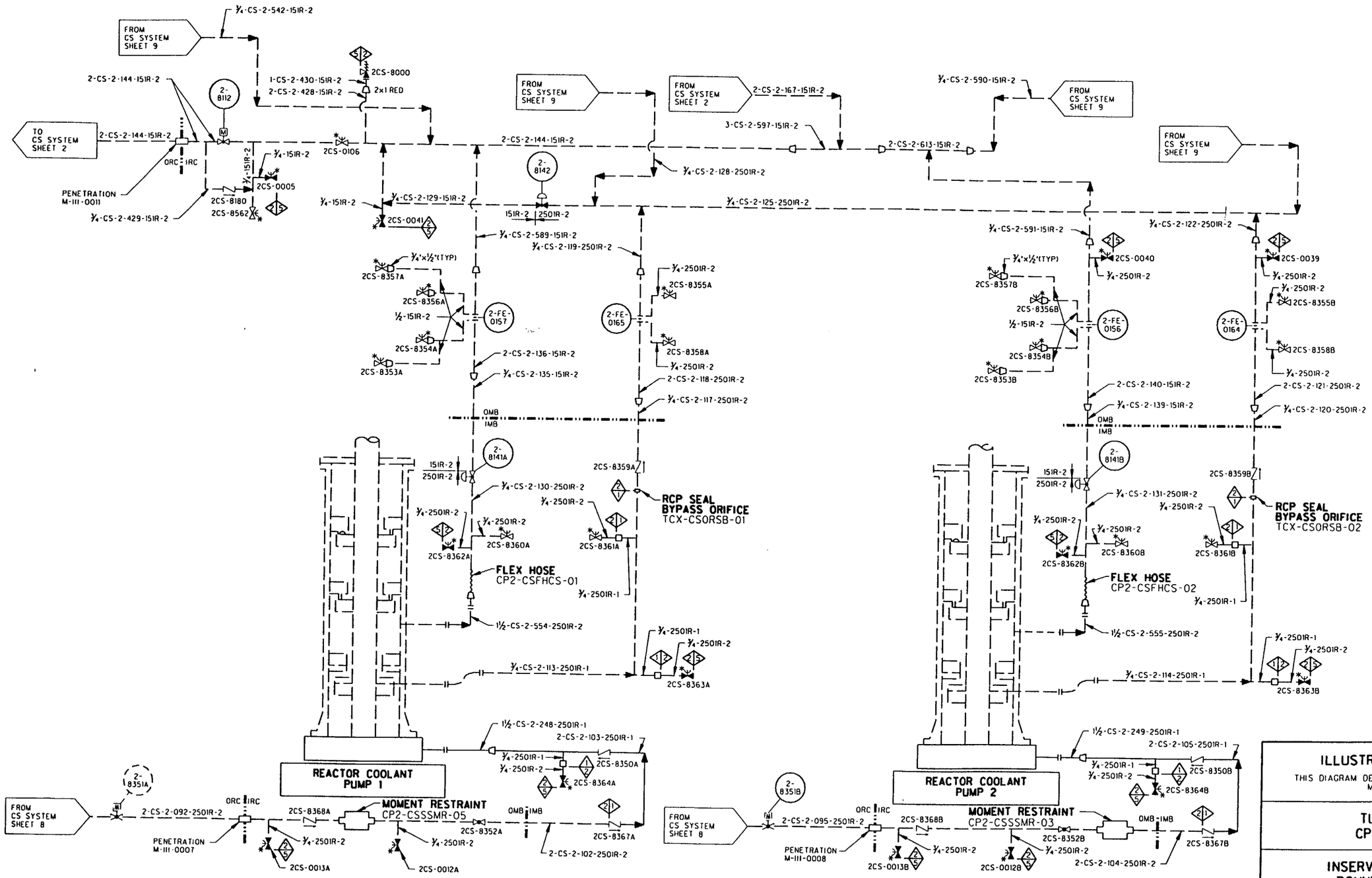

ECS255101.1S1

ILLUSTRATIVE USE ONLY

THIS DIAGRAM DEVELOPED FROM FLOW DIAGRAM M2-0255 SH 01

TU ELECTRIC
CPSES UNIT 2

INSERVICE INSPECTION BOUNDARY DIAGRAM

CHEMICAL AND VOLUME CONTROL SYSTEM
SHEET 10 OF 13

REV 2 | APPROVED: SIGNED COPY ON FILE

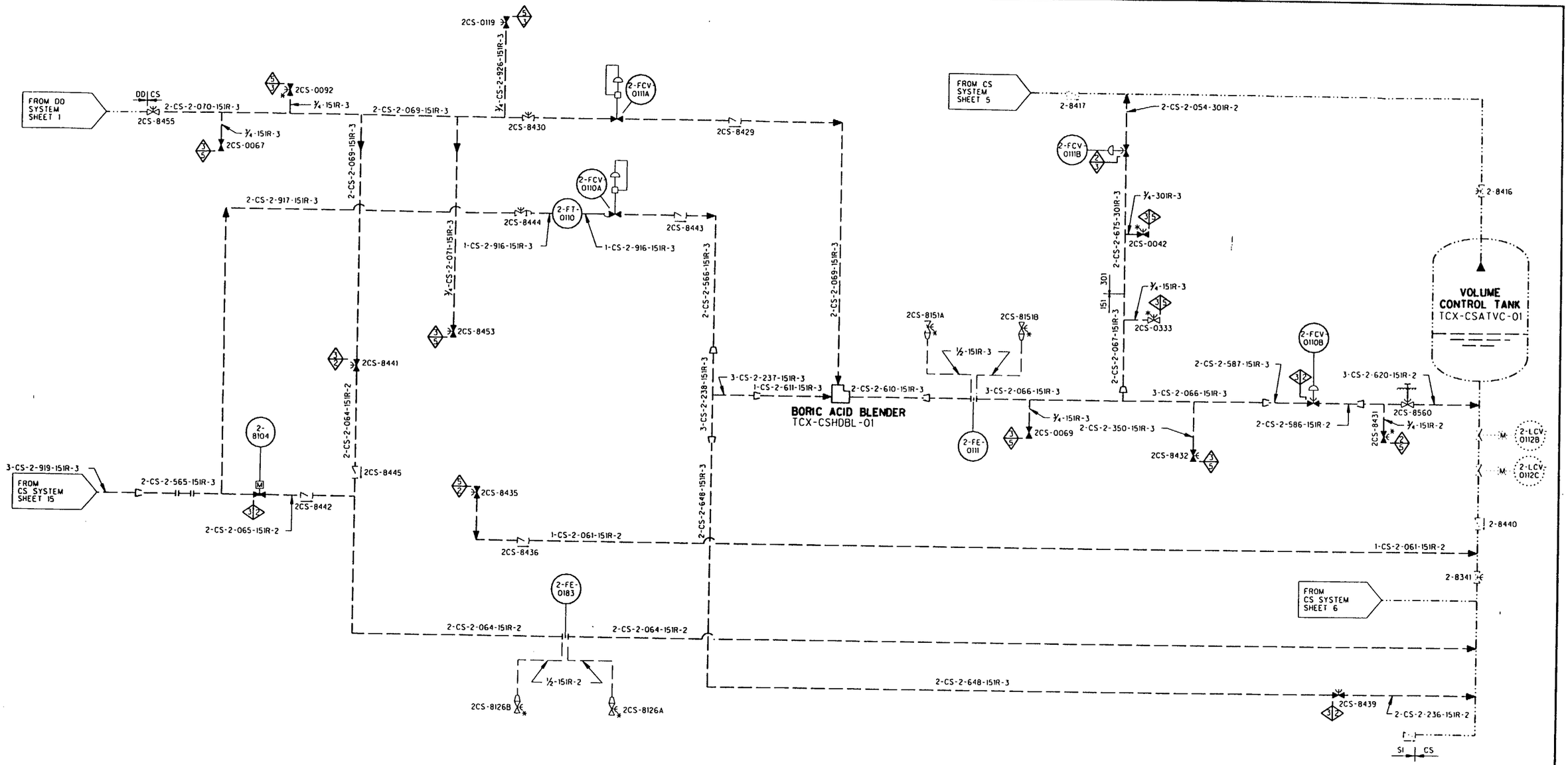

ILLUSTRATIVE USE ONLY

THIS DIAGRAM DEVELOPED FROM FLOW DIAGRAM M2-0255 SH 02

TU ELECTRIC
CPSES UNIT 2

INSERVICE INSPECTION BOUNDARY DIAGRAM

CHEMICAL AND VOLUME CONTROL SYSTEM
SHEET 11 OF 13

REV 3 | APPROVED: SIGNED COPY ON FILE

ECS255112.1SI

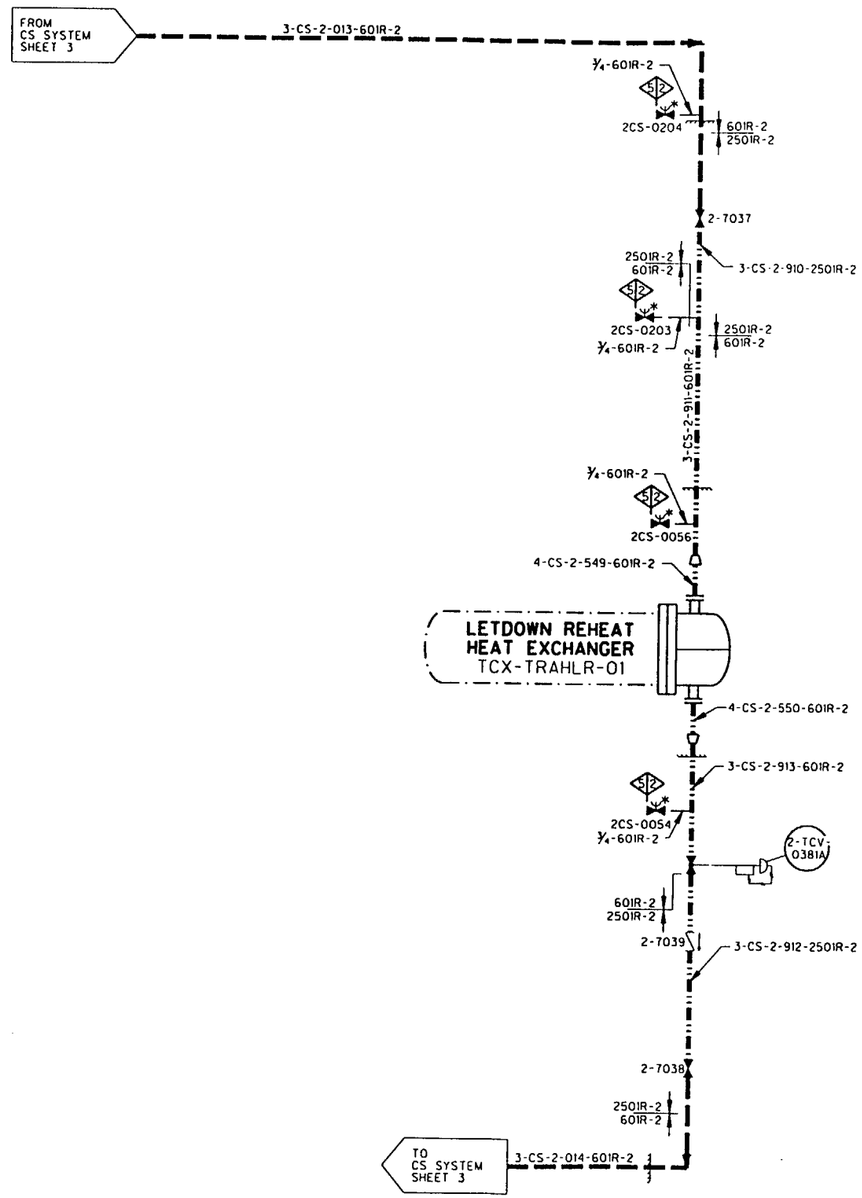

ILLUSTRATIVE USE ONLY

THIS DIAGRAM DEVELOPED FROM FLOW DIAGRAM M2-0256 SH A

TU ELECTRIC
CPSES UNIT 2

INSERVICE INSPECTION
BOUNDARY DIAGRAM

CHEMICAL AND VOLUME
CONTROL SYSTEM
SHEET 12 OF 13

REV 3 | APPROVED: SIGNED COPY ON FILE

ECS256121.1S1

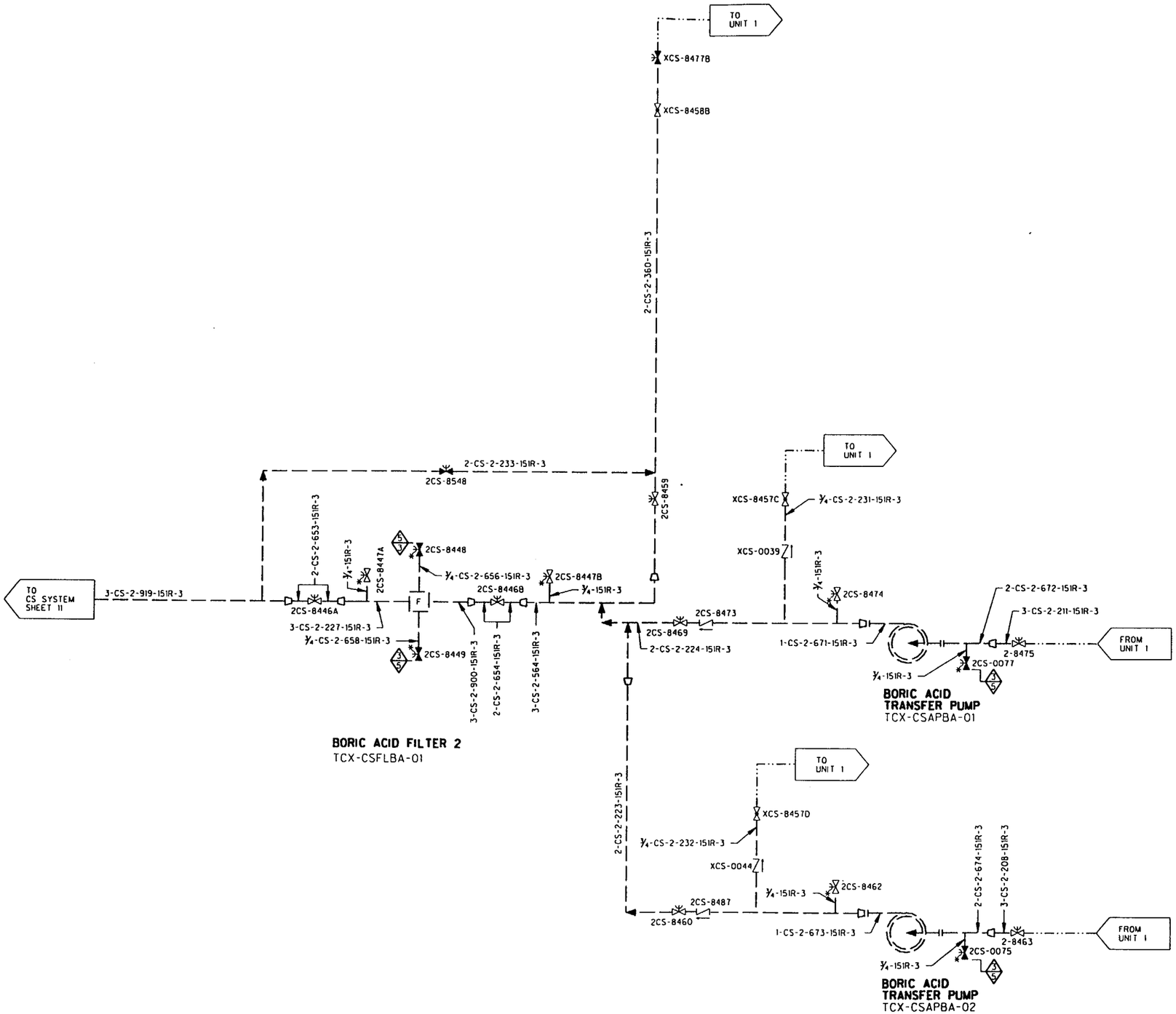

ILLUSTRATIVE USE ONLY

THIS DIAGRAM DEVELOPED FROM FLOW DIAGRAM M1-0257

TU ELECTRIC
CPSES UNIT 2

INSERVICE INSPECTION BOUNDARY DIAGRAM

CHEMICAL AND VOLUME CONTROL SYSTEM
SHEET 13 OF 13

REV 2 | APPROVED: SIGNED COPY ON FILE

ECS257131.1SI

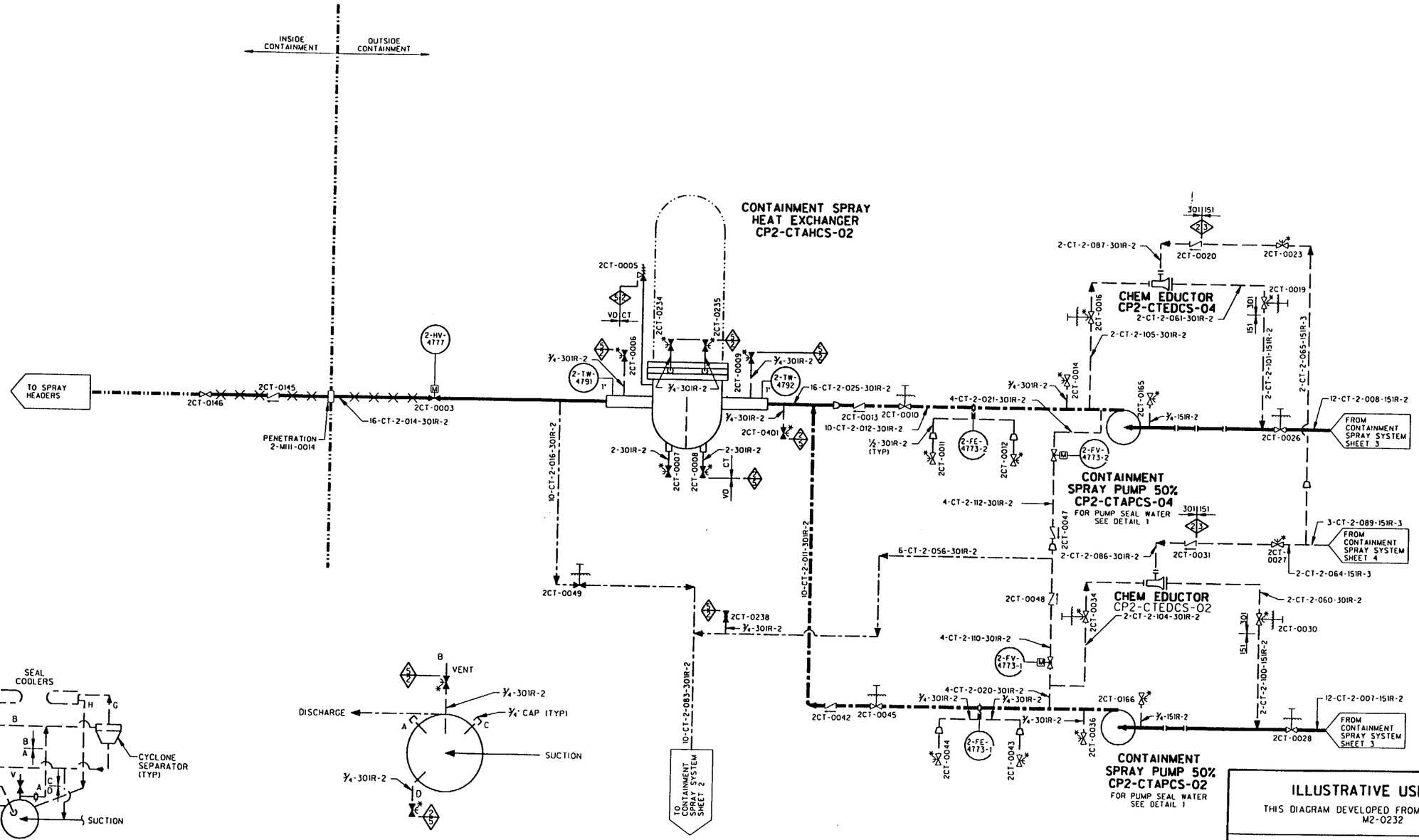

CONTAINMENT SPRAY PUMPS SEAL COOLER PIPING

SEE TABLE FOR LINE NUMBERS

PUMP NUMBER	VALVE NUMBER	XXX FOR LINE NUMBERS							
		A	B	C	D	E	F	G	H
CP2-CTAPCS-02	2CT-0193	913	914	915	916	917	918	919	920
CP2-CTAPCS-04	2CT-0195	929	930	931	932	933	934	935	936

LINE NUMBERS ARE ½-CT-1-XXX-1501R-2

CONTAINMENT SPRAY PUMPS

PUMPS, VENTS AND DRAINS (TYP 4)

PUMP	A (SUCT VENT)	B (DISCH VENT)	C (SUCT VENT)	D (DRAIN)
CP2-CTAPCS-02	-	2CT-0193	-	2CT-0035
CP2-CTAPCS-04	-	2CT-0195	-	2CT-0017

DETAIL 1

ILLUSTRATIVE USE ONLY

THIS DIAGRAM DEVELOPED FROM FLOW DIAGRAM M2-0232

TU ELECTRIC
CPSES UNIT 2

INSERVICE INSPECTION BOUNDARY DIAGRAM

CONTAINMENT SPRAY SYSTEM

SHEET 1 OF 4

REV 3 | APPROVED: SIGNED COPY ON FILE

ECT232012.ISI

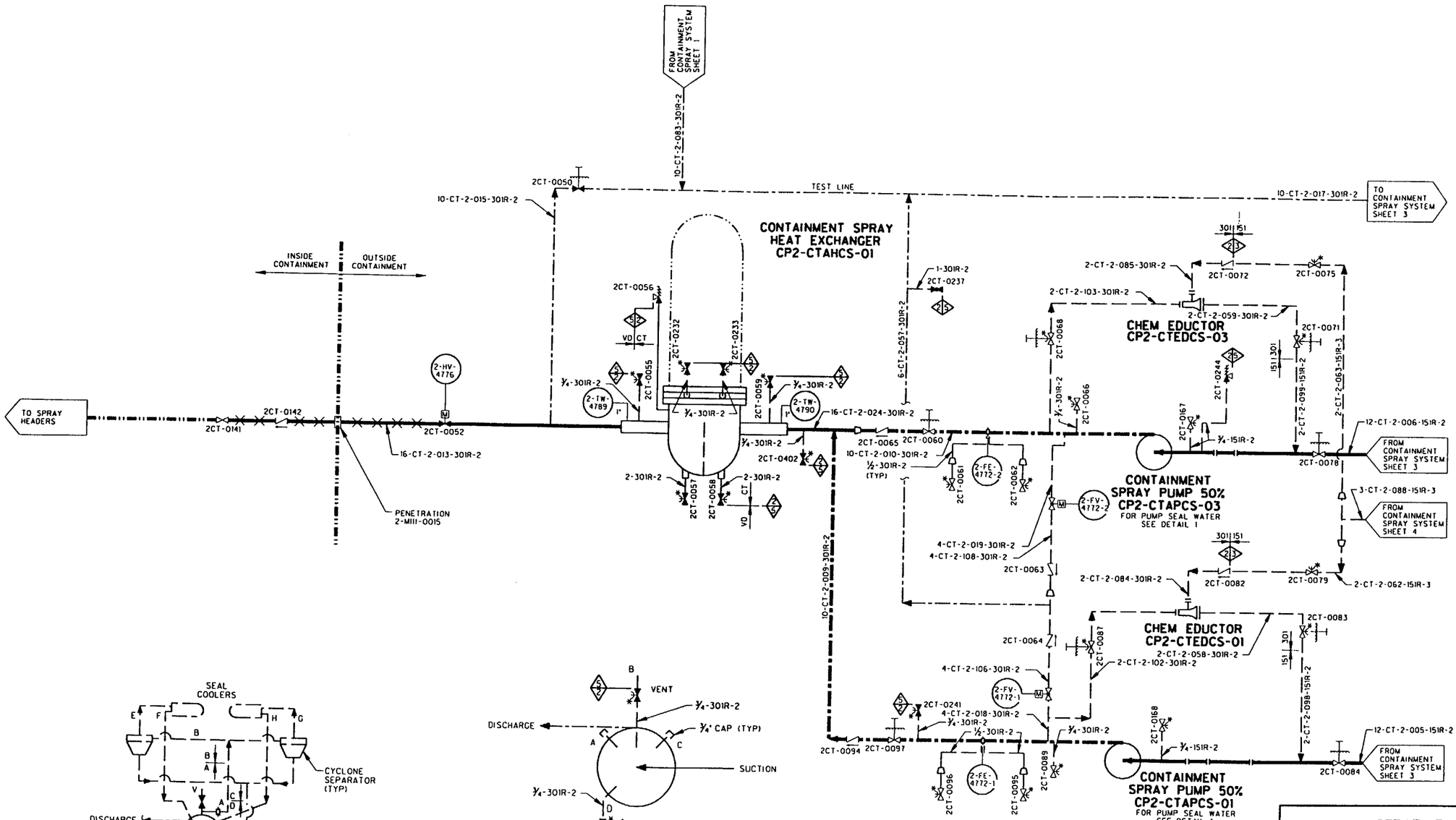

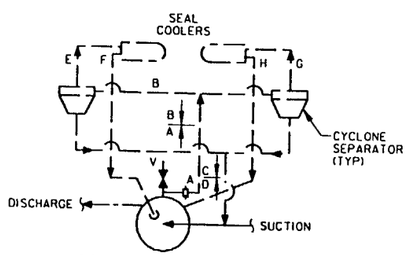

CONTAINMENT SPRAY PUMPS SEAL COOLER PIPING

SEE TABLE FOR LINE NUMBERS

PUMP NUMBER	VALVE NUMBER	XXX FOR LINE NUMBERS							
		A	B	C	D	E	F	G	H
CP2-CTAPCS-01	2CT-0192	905	906	907	908	909	910	911	912
CP2-CTAPCS-03	2CT-0194	921	922	923	924	925	926	927	928

LINE NUMBERS ARE ½-CT-2-XXX-1501R-2

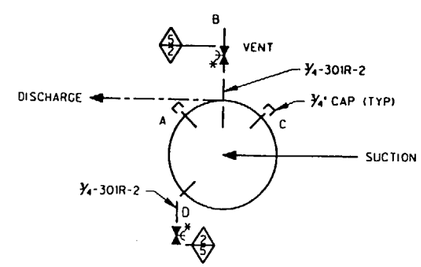

CONTAINMENT SPRAY PUMPS

PUMPS, VENTS AND DRAINS (TYP 4)

PUMP	A (SUCT VENT)	B (DISCH VENT)	C (SUCT VENT)	D (DRAIN)
CP2-CTAPCS-01	-	2CT-0192	-	2CT-0086
CP2-CTAPCS-03	-	2CT-0194	-	2CT-0069

DETAIL 1

ILLUSTRATIVE USE ONLY

THIS DIAGRAM DEVELOPED FROM FLOW DIAGRAM M2-0232

TU ELECTRIC
CPSES UNIT 2

INSERVICE INSPECTION BOUNDARY DIAGRAM

CONTAINMENT SPRAY SYSTEM

SHEET 2 OF 4

REV 3 | APPROVED: SIGNED COPY ON FILE

ECT232022.1S1

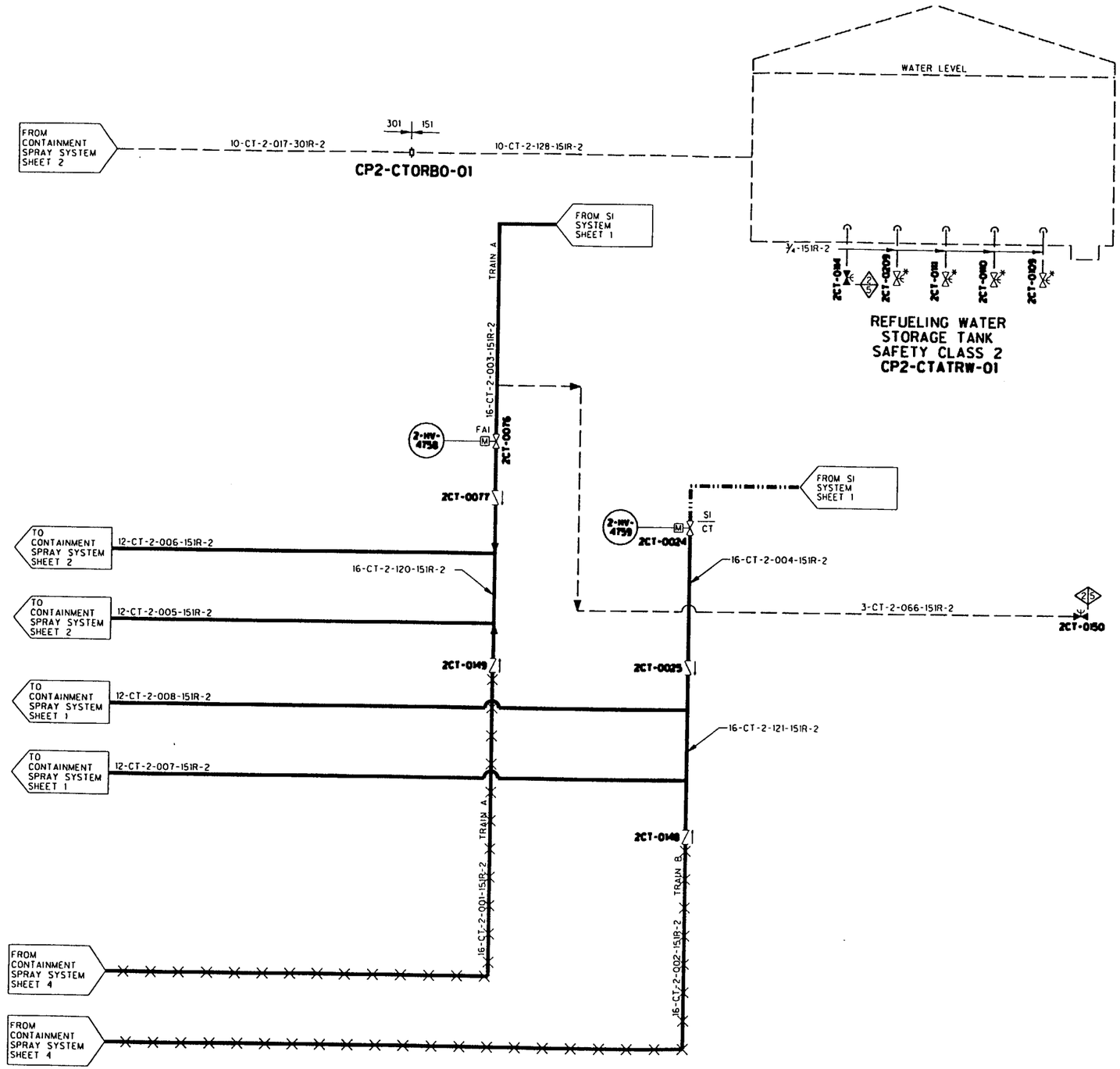

ILLUSTRATIVE USE ONLY

THIS DIAGRAM DEVELOPED FROM FLOW DIAGRAM M2-0232 SH A

TU ELECTRIC
CPSES UNIT 2

INSERVICE INSPECTION BOUNDARY DIAGRAM

CONTAINMENT SPRAY SYSTEM
SHEET 3 OF 4

REV 2 | APPROVED: SIGNED COPY ON FILE

ECT232031.1SI

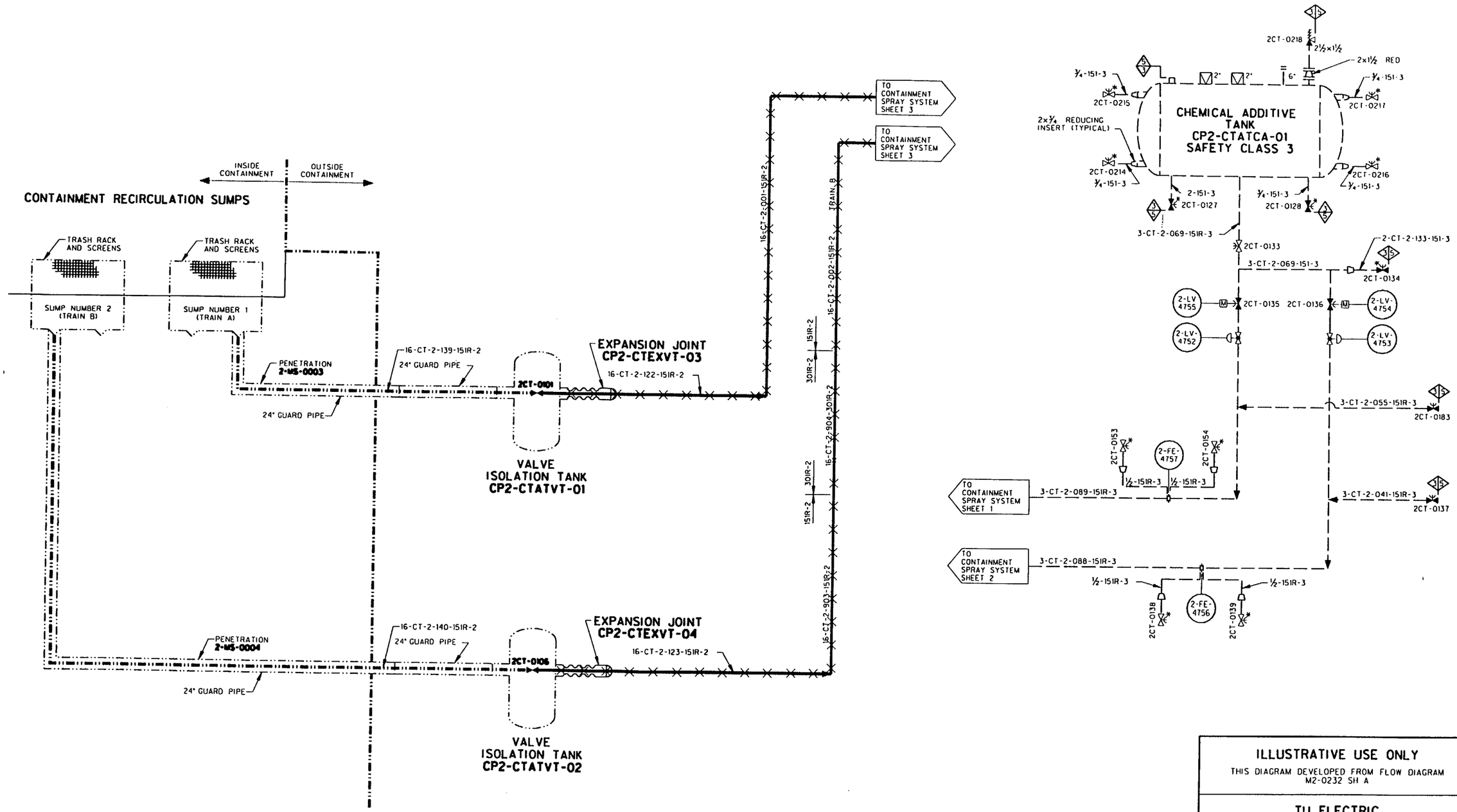

ILLUSTRATIVE USE ONLY

THIS DIAGRAM DEVELOPED FROM FLOW DIAGRAM M2-0232 SH A

TU ELECTRIC
CPSES UNIT 2

INSERVICE INSPECTION BOUNDARY DIAGRAM

CONTAINMENT SPRAY SYSTEM

SHEET 4 OF 4

REV 2 | APPROVED: SIGNED COPY ON FILE

ECT232041.ISI

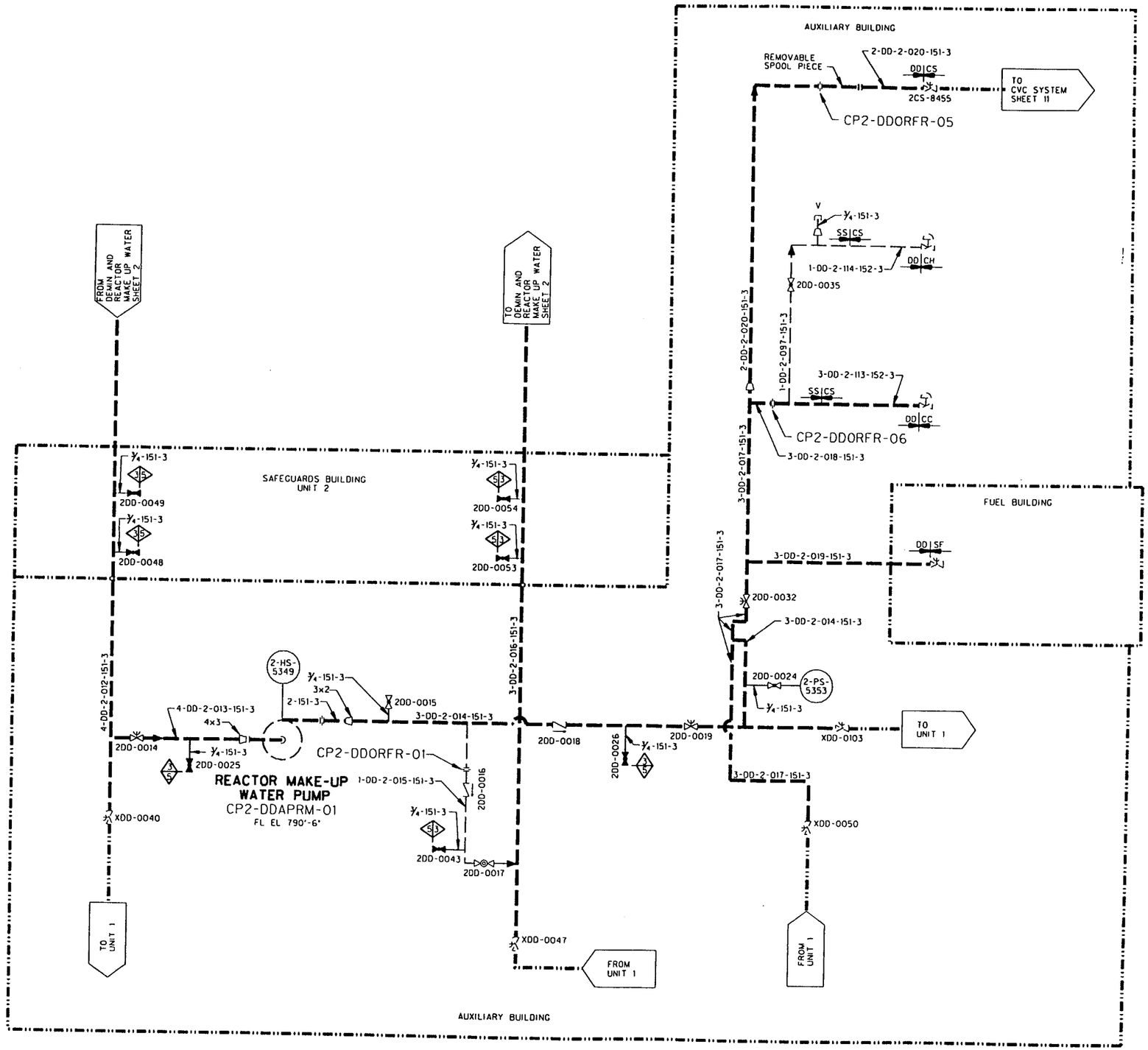

ILLUSTRATIVE USE ONLY

THIS DIAGRAM DEVELOPED FROM FLOW DIAGRAM M2-0241

TU ELECTRIC
CPSES UNIT 2

INSERVICE INSPECTION BOUNDARY DIAGRAM

DEMINERALIZED AND REACTOR MAKE UP WATER
SHEET 1 OF 2

REV 2 | APPROVED: SIGNED COPY ON FILE

EDD241011.ISI

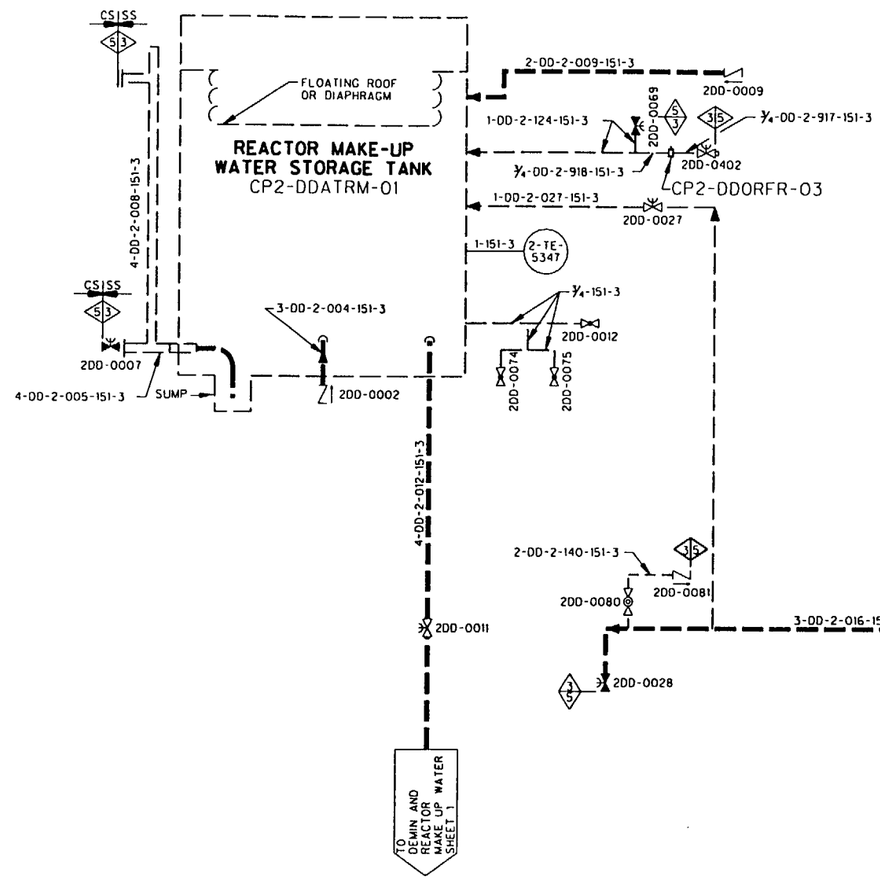

ILLUSTRATIVE USE ONLY

THIS DIAGRAM DEVELOPED FROM FLOW DIAGRAM M2-0241 AND M2-0242

TU ELECTRIC
CPSES UNIT 2

INSERVICE INSPECTION BOUNDARY DIAGRAM

DEMINERALIZED AMD REACTOR MAKE UP WATER
SHEET 2 OF 2

REV	2	APPROVED:	SIGNED COPY ON FILE

EDD241021.1S1

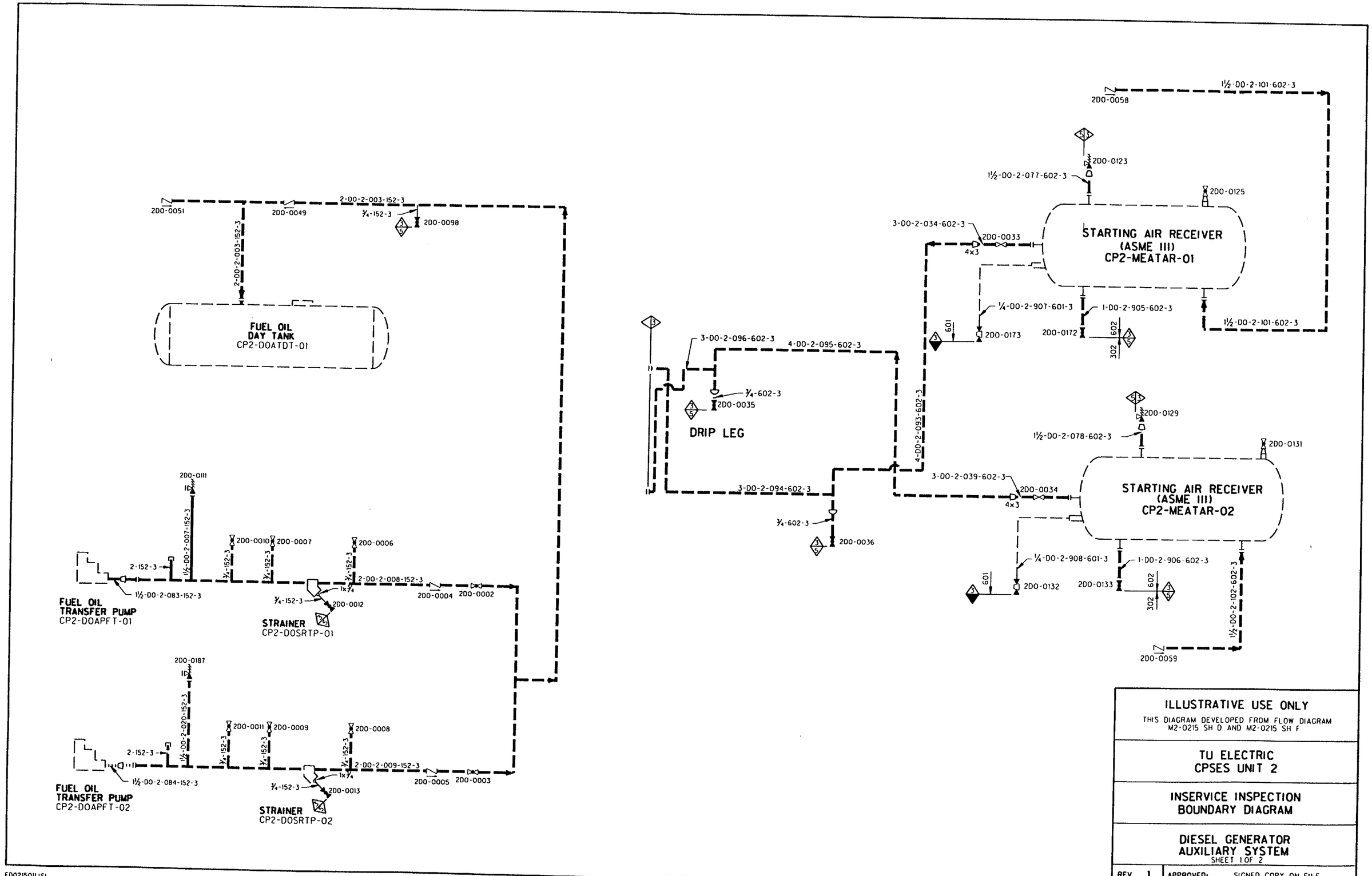

ILLUSTRATIVE USE ONLY

THIS DIAGRAM DEVELOPED FROM FLOW DIAGRAM M2-0215 SH D AND M2-0215 SH F

TU ELECTRIC
CPSES UNIT 2

INSERVICE INSPECTION
BOUNDARY DIAGRAM

DIESEL GENERATOR
AUXILIARY SYSTEM
SHEET 1 OF 2

REV 1 | APPROVED: SIGNED COPY ON FILE

ED0215011.151

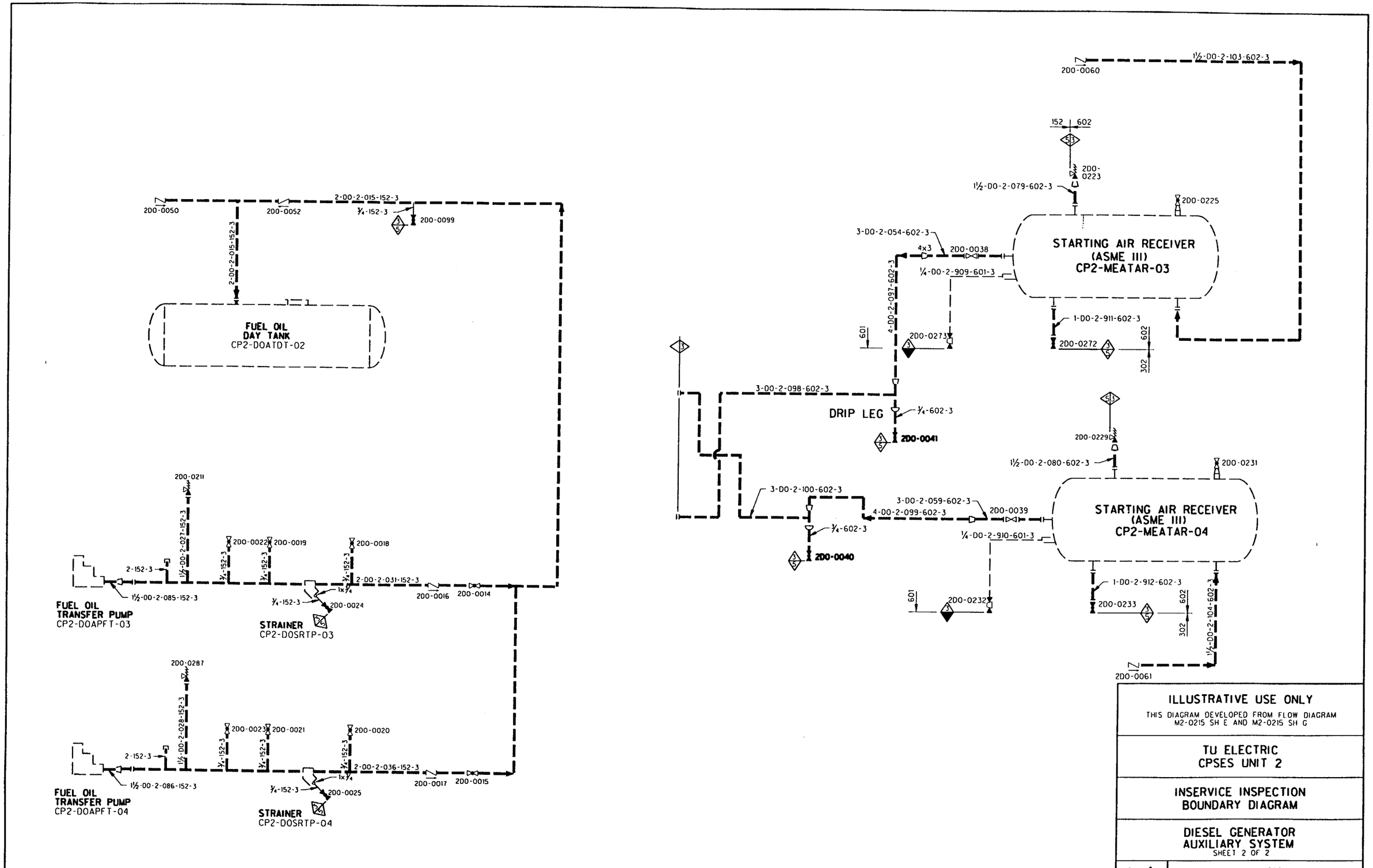
2DO-0050
2DO-0052
2-DO-2-015-152-3
¾-152-3
2DO-0099
2-DO-2-015-152-3
FUEL OIL
DAY TANK
CP2-DOATDT-02
2DO-0211
1½-DO-2-027-152-3
2-152-3
1½-DO-2-085-152-3
FUEL OIL
TRANSFER PUMP
CP2-DOAPFT-03
¾-152-3
2DO-0022
2DO-0019
2DO-0018
2-DO-2-031-152-3
1x¾
2DO-0024
STRAINER
CP2-DOSRTP-03
2DO-0016
2DO-0014
2DO-0287
1½-DO-2-028-152-3
2-152-3
1½-DO-2-086-152-3
FUEL OIL
TRANSFER PUMP
CP2-DOAPFT-04
¾-152-3
2DO-0023
2DO-0021
2DO-0020
2-DO-2-036-152-3
1x¾
2DO-0025
STRAINER
CP2-DOSRTP-04
2DO-0017
2DO-0015
2DO-0060
1½-DO-2-103-602-3
152
602
2DO-0223
1½-DO-2-079-602-3
2DO-0225
3-DO-2-054-602-3
4x3
2DO-0038
¼-DO-2-909-601-3
STARTING AIR RECEIVER
(ASME III)
CP2-MEATAR-03
4-DO-2-097-602-3
601
2DO-0273
1-DO-2-911-602-3
2DO-0272
602
302
3-DO-2-098-602-3
DRIP LEG
¾-602-3
2DO-0041
2DO-0229
1½-DO-2-080-602-3
2DO-0231
3-DO-2-100-602-3
3-DO-2-059-602-3
4-DO-2-099-602-3
2DO-0039
¾-602-3
2DO-0040
¼-DO-2-910-601-3
STARTING AIR RECEIVER
(ASME III)
CP2-MEATAR-04
601
2DO-0232
1-DO-2-912-602-3
2DO-0233
602
302
1½-DO-2-104-602-3
2DO-0061
ILLUSTRATIVE USE ONLY
THIS DIAGRAM DEVELOPED FROM FLOW DIAGRAM
M2-0215 SH E AND M2-0215 SH G
TU ELECTRIC
CPSES UNIT 2
INSERVICE INSPECTION
BOUNDARY DIAGRAM
DIESEL GENERATOR
AUXILIARY SYSTEM
SHEET 2 OF 2
REV 1
APPROVED: SIGNED COPY ON FILE
ED0215021.1S1