Kewaunee Nuclear Power Plant
N490 Highway 42
Kewaunee, WI 54216-9511
920.388.2560

Point Beach Nuclear Plant
6610 Nuclear Road
Two Rivers, WI 54241
920.755.2321

NMC
Committed to Nuclear Excellence

Kewaunee / Point Beach Nuclear
Operated by Nuclear Management Company, LLC

NRC-02-027

March 21, 2002

10 CFR 50.73

U. S. Nuclear Regulatory Commission
Attention: Document Control Desk
Washington, D.C. 20555

Ladies/Gentlemen:

Docket 50-305
Operating License DPR-43
Kewaunee Nuclear Power Plant
Reportable Occurrence 2001-005-02

In accordance with the requirements of 10 CFR 50.73, "Licensee Event Report System," the attached Licensee Event Report (LER) for reportable occurrence 2001-005-02 is being submitted. This report contains no new commitments.

Sincerely,

Thomas Coutu
Manager-Kewaunee Plant

ADB

Attach.

cc - INPO Records Center
US NRC Senior Resident Inspector
US NRC, Region III

IE22

NRC FORM 366 (1-2001)

U.S. NUCLEAR REGULATORY COMMISSION

LICENSEE EVENT REPORT (LER)

(See reverse for required number of digits/characters for each block)

APPROVED BY OMB NO. 3150-0104 EXPIRES 7-31-2004
Estimated burden per response to comply with this mandatory information collection request: 50 hours. Reported lessons learned are incorporated into the licensing process and fed back to industry. Send comments regarding burden estimate to the Records Management Branch (T-6 E6), U.S. Nuclear Regulatory Commission, Washington, DC 20555-0001, or by internet e-mail to bjs1@nrc.gov, and to the Desk Officer, Office of Information and Regulatory Affairs, NEOB-10202 (3150-0104), Office of Management and Budget, Washington, DC 20503. If a means used to impose information collection does not display a currently valid OMB control number, the NRC may not conduct or sponsor, and a person is not required to respond to, the information collection.

FACILITY NAME (1)	DOCKET NUMBER (2)	PAGE (3)
Kewaunee Nuclear Power Plant	05000305	1 of 6

TITLE (4)

Unanalyzed Condition: Non-Safety Related Service Water Header Flows Affects Safety Related Components

EVENT DATE (5)			LER NUMBER (6)			REPORT DATE (7)			OTHER FACILITIES INVOLVED (8)	
MO	DAY	YEAR	YEAR	SEQUENTIAL NUMBER	REV NO	MO	DAY	YEAR	FACILITY NAME	DOCKET NUMBER
10	09	2001	2001	-- 005 --	02	03	21	2002	FACILITY NAME	DOCKET NUMBER

OPERATING MODE (9)	N
POWER LEVEL (10)	000

THIS REPORT IS SUBMITTED PURSUANT TO THE REQUIREMENTS OF 10 CFR §: (Check all that apply) (11)

	20.2201(b)		20.2203(a)(3)(ii)	X	50.73(a)(2)(ii)(B)		50.73(a)(2)(ix)(A)
	20.2201(d)		20.2203(a)(4)		50.73(a)(2)(iii)		50.73(a)(2)(x)
	20.2203(a)(1)		50.36(c)(1)(i)(A)		50.73(a)(2)(iv)(A)		73.71(a)(4)
	20.2203(a)(2)(i)		50.36(c)(1)(ii)(A)		50.73(a)(2)(v)(A)		73.71(a)(5)
	20.2203(a)(2)(ii)		50.36(c)(2)		50.73(a)(2)(v)(B)		OTHER Specify in Abstract below or in NRC Form 366A
	20.2203(a)(2)(iii)		50.46(a)(3)(ii)		50.73(a)(2)(v)(C)		
	20.2203(a)(2)(iv)		50.73(a)(2)(i)(A)		50.73(a)(2)(v)(D)		
	20.2203(a)(2)(v)		50.73(a)(2)(i)(B)		50.73(a)(2)(vii)		
	20.2203(a)(2)(vi)		50.73(a)(2)(i)(C)		50.73(a)(2)(viii)(A)		
	20.2203(a)(3)(i)		50.73(a)(2)(ii)(A)		50.73(a)(2)(viii)(B)		

LICENSEE CONTACT FOR THIS LER (12)

NAME	TELEPHONE NUMBER (Include Area Code)
Anthony David Bolyen – Plant Licensing	(920) 388-8864

COMPLETE ONE LINE FOR EACH COMPONENT FAILURE DESCRIBED IN THIS REPORT (13)

CAUSE	SYSTEM	COMPONENT	MANU-FACTURER	REPORTABLE TO EPIX	CAUSE	SYSTEM	COMPONENT	MANU-FA CTURER	REPORTABLE TO EPIX

SUPPLEMENTAL REPORT EXPECTED (14)				EXPECTED SUBMISSION DATE (15)	MONTH	DAY	YEAR
	YES (If yes, complete EXPECTED SUBMISSION DATE).	X	NO				

ABSTRACT (Limit to 1400 spaces, i.e., approximately 15 single-spaced typewritten lines) (16)

On 10/9/01, while the plant was in refueling shutdown, Nuclear Management Company (NMC) determined that an analyzed Service Water (SW) flow to the non-safety related turbine building SW header may be exceeded under postulated accident conditions. The increased turbine building SW flow (and subsequent decreased safety related SW flow) could have impacted the ability of the safety related SW flow to remove the design basis heat loads from safety related components. Due to the length of time since plant design, NMC did not determine whether 1) the original designers failed to realize this potential design interaction or 2) they considered manual isolation of the turbine building as a design input, thus negating the impact of the non-safety related SW flow in the turbine building on the safety related components. NMC installed a design change to the turbine building SW header isolation valves to automatically isolate on a Safety Injection sequence signal concurrent with low SW header pressure. Also, NMC implemented administrative controls to require appropriate plant configuration in the event an affected component becomes inoperable. NMC plans to submit a License Amendment Request to change the KNPP Technical Specifications to include these controls. This event was characterized by the KNPP PRA as having very low risk significance.

DESCRIPTION

On October 9, 2001, while the plant was in refueling shutdown, Nuclear Management Company (NMC) personnel determined that an analyzed Service Water (SW) flow of 2000 gpm to the non-safety related turbine building SW header may be exceeded under postulated accident conditions. NMC concluded that this condition may have impacted the ability of safety related components to perform their intended function.

As shown in Figure 1, the turbine building SW header is supplied through one of two remotely operated butterfly valves, SW-4A and SW-4B from the 'A' and 'B' SW header, respectively. During normal operation, only one valve may be open at a time; however, both valves can be in the closed position concurrently. The turbine building service water header valves are arranged such that they fail as-is on loss of instrument air. Sufficient compressed air is stored within a Class I accumulator for each turbine building header valve to permit valve closure following a loss of instrument air. Additionally, under a loss of off-site power (LOOP) condition, the ability to close valves SW-4A and SW-4B remains operable since power to the valve control circuit is provided by safety related battery backed instrument inverters and buses.

Air operated temperature control valves [TCV] downstream of valves SW-4A and SW-4B modulate to control the SW flow to non-safety related components. The temperature control valves have fail open operators in the event of a loss of instrument air [LD]. The instrument air feeding the non-safety related temperature control valves is not credited to remain operable during LOOP condition.

The Service Water System has been designed to provide redundant cooling water supplies to components such as: the Containment Fan Coil Units, diesel generators, air compressors, component cooling heat exchangers, safety injection pump stuffing boxes and/or coolers, and control room air conditioners. The design includes provisions for isolation of nonessential components following an accident. Lake Michigan is the source of service water.

Under the conditions of a concurrent loss-of-coolant accident (LOCA) and loss of off-site power (LOCA-LOOP), either pair of SW pumps are capable of supplying the required cooling capacity to the containment fan-coil units, diesel generators and other components. The two service water supply headers run through the Screenhouse Tunnel to the Class I portion of the Turbine Building. The return paths are separated to the fullest extent possible to minimize the possibility of flooding problems should a return line fail. Service water returns to the Circulating Water System discharge which discharges to Lake Michigan.

The service water header can be separated to provide two independent systems with no cross-connections. Upon manual or automatic initiation of safety injection, both service water header isolation valves (SW-3A and SW-3B) close separating the service water system into two independent headers. In addition, the four containment fan coil service water return motor valves open and the two containment fan coil service water flow control valves close to provide service water flow through all containment fan coil units.

The original design of the SW system assumed a single train (two SW pumps [P] per train) provided sufficient safety related cooling during a design basis accident assuming an inlet temperature of 66 degrees F. During an internal audit in 1990, it was determined the inlet temperature had exceeded 66 degrees F in the past. Testing and evaluation performed from 1990 through 1992 attempted to demonstrate that an inlet temperature of 80 degrees F was acceptable. Problems associated with the higher SW design temperature have been previously reported in LER 2000-010-01.

Testing performed in 2000 included a 2000 gallons per minute (gpm) turbine building SW load which was thought to be representative of the turbine building SW load at 100 percent power. Subsequent evaluations were performed using data obtained with the 2000 gpm load.

Prior to entering the scheduled refueling outage, and while the plant was removed from service on September 23, 2001, operating flow and temperature data was obtained for the non-safety related Service Water (SW) system [KG] header in the turbine building. However, after reviewing the 2001 test data, Nuclear Management Company (NMC) personnel determined that the analyzed SW flow of 2000 gpm to the turbine building may be exceeded under postulated accident conditions. As a result of this testing, NMC concluded that during a LOCA-LOOP the turbine building demand on the SW system could be significantly greater than the flows assumed for previous tests and analyses. The increased turbine building SW flow (and subsequent decreased safety related SW flow) could have impacted the ability of the safety related SW flow to remove the design basis heat loads from safety related components.

In addition, the decreased SW flow to the Containment Fan Coil Units (CFCUs) [BK] could have resulted in a SW pressure below the peak postulated containment pressure during a LOCA-LOOP. Consequently, voiding in the CFCUs, as described in NRC Generic Letter 96-06, could have occurred and reduced flow through the CFCUs below that assumed in the accident analysis.

At 1342 CDT, on October 9, 2001, NMC conservatively reported this condition to the NRC (EN# 38367) in accordance with 10CFR50.72(b)(3)(ii)(B) as a condition that results in the plant being in an unanalyzed condition that significantly degrades plant safety.

CAUSE OF THE EVENT

The design of the SW system in the turbine building has been in place since original plant construction. Due to the length of time since plant design, NMC did not determine whether 1) the original designers failed to realize this potential design interaction or 2) they considered manual isolation of the turbine building as a design input, thus negating the impact of the non-safety related SW flow in the turbine building on the safety related components.

Assumptions presented in the Service Water Elevated Temperature Report were either incorrect or unclear to site personnel and were not validated by testing. Specifically, in earlier tests of the SW system, the turbine building SW header was isolated from the safety related SW train being tested on the assumption that the turbine building SW header would be isolated from the safety related SW header during an accident. No automatic isolation was provided to isolate the turbine building SW header during an accident. Other assumptions, such as the 2000 gpm flow to the turbine building SW header, were used based on past testing. Attempts were made in 1992 to validate this assumption; however, those attempts failed to identify the concern discovered during the testing performed in the September 2001. Because the timing for subsequent testing was not during peak inlet temperatures, the turbine building SW header showed flow less than 2000 gpm.

However, since this issue has existed since original plant design, prior identification would not have precluded occurrence.

ANALYSIS OF THE EVENT

Analysis of the SW flows and the cooling requirements of the affected components has identified the maximum permissible SW inlet temperatures for key safety related components. These temperatures are being compared to actual lake temperature over the last three years. The analysis of these two sets of data will provide NMC with an understanding of the affect this design issue had on plant safety.

NMC has evaluated the historical data and risk-insights from the site-specific Probabilistic Risk Assessment (PRA). As a result of this evaluation, this condition was assessed with an incremental core damage frequency of 1.1×10^{-7}, which corresponds to very low risk significance.

This issue only affects the train of SW aligned to supply the turbine building header. This design issue alone did not result in redundant trains of SW being inoperable. Therefore, this condition is not reportable as a safety system functional failure under 10CFR50.73(a)(2)(v). However, because this event did result in one train of SW being considered inoperable, it is being reported in accordance with 10CFR50.73(a)(2)(ii)(B) as a unanalyzed condition that significantly degraded plant safety.

CORRECTIVE ACTIONS

NMC has completed the following corrective actions:

- NMC tested the SW system including postulated accident conditions in the turbine building SW header.
- Following the testing, NMC installed a design change on the SW-4A and SW-4B valves to automatically isolate the turbine building SW header on a Safety Injection (SI) sequence signal concurrent with low SW header pressure.
- In conjunction with the design change, NMC implemented compensatory administrative controls to require appropriate plant configuration in the event a required component becomes inoperable.

NMC plans to perform the following corrective actions:

- Continue to evaluate the as-found condition to determine the past operability of affected safety related equipment and for overall risk significance.
- Submit a License Amendment Request to change the KNPP Technical Specifications to include controls on plant configuration in the event a required component becomes inoperable.
- Develop and implement a preventative maintenance schedule for the new equipment installed as part of the design change.

SIMILAR EVENTS

LER 2000-10-001, "Testing and Evaluation Determine the Service Water System has a Lower Design Basis Temperature Than Previously Believed," describes other design basis issues regarding the Service Water System. Specifically, SW temperatures near the design limit of 80 degrees F caused flow demand to increase beyond the ability of the certain common discharge piping to allow return. That condition resulted in inadequate flow to certain safety-related components. The LER identifies the cause as "a failure to recognize a design interaction during original plant construction and the assumption that a loss of a whole train was a limiting failure." Although design interaction is a cause in the event reported herein, the extent of condition for LER 2000-10-01 would not have identified the turbine building flow as a concern without the data provided from the 2001 testing. Therefore, the corrective actions in LER 2000-010-01 would not have prevented this occurrence.
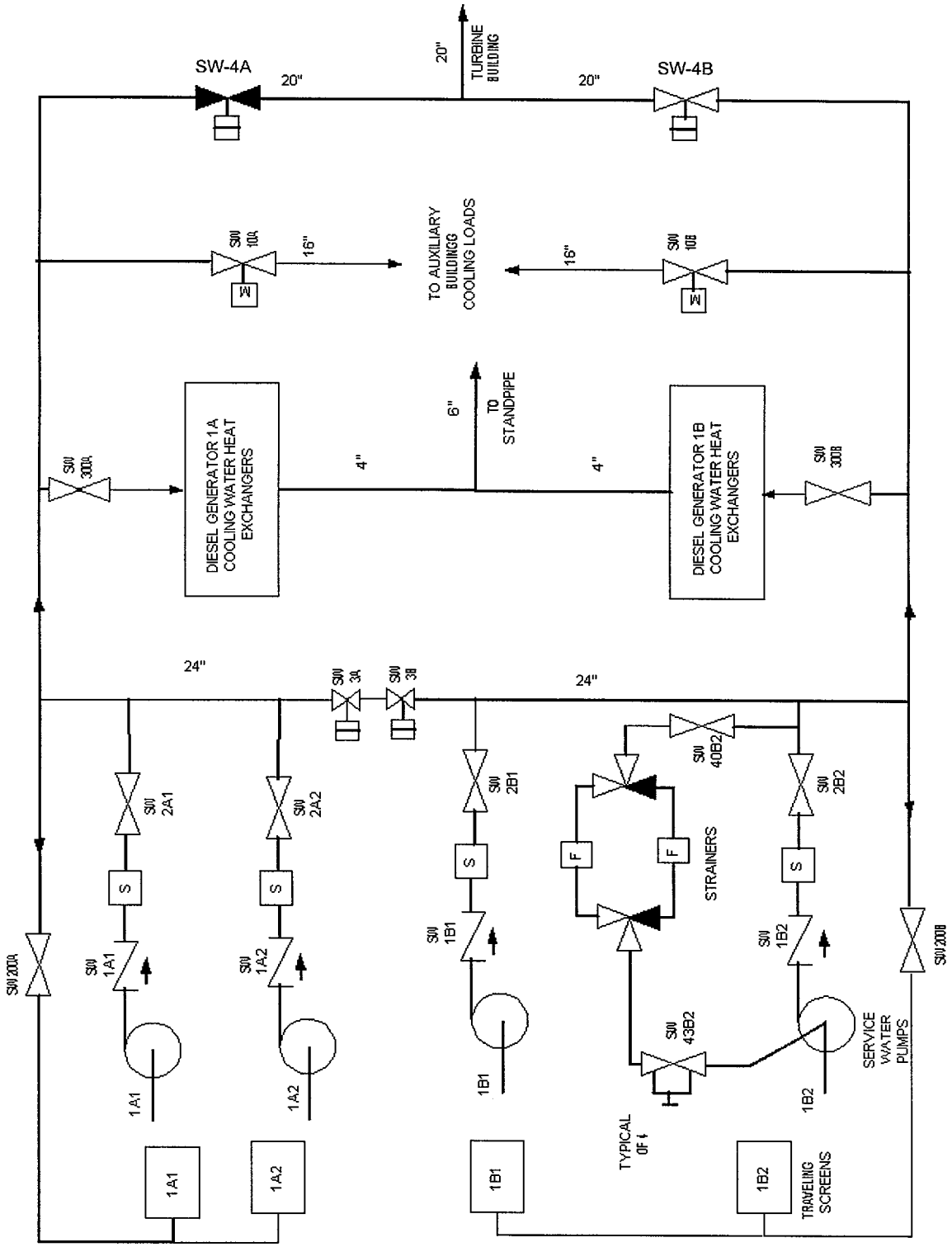
Figure 1: Simplified SW Sketch