ROCHESTER GAS & ELECTRIC CORPORATION

DOCUMENT CONTROL

Document Transmittal

Transmittal: 200203032 032
Date: 03/14/2002
Holder: 1217

To: DOCUMENT CONTROL DESK
US NRC
ATT: GUY VISSING
PROJECT DOCTORATE 1-1
WASHINGTON DC 20555

LISTED BELOW ARE NEW OR REVISED CONTROLLED DOCUMENTS. REVIEW THE ATTACHED INSTRUCTION LETTER (IF APPLICABLE), AND UPDATE YOUR CONTROLLED DOCUMENT IN ACCORDANCE WITH EP-3-S-0901

Doc Id	Doc Title	Rev	Rev Date	Qty
TRM	TECHNICAL REQUIREMENTS MANUAL FOR GINNA STATION	018	03/15/2002	1

Receipt Acknowledgement and Action Taken:

Signature _____ Date _____

Return ENTIRE FORM to: Rochester Gas & Electric Corporation
Ginna Station - Records Management
1503 Lake Road
Ontario, New York 14519

A001

Rochester Gas and Electric Corporation
Inter-Office Correspondence

March 13, 2002

Subject: Technical Requirements Manual (TRM) Revision 18

To: Distribution

Attached are the revised pages for the Ginna Station Technical Requirements Manual (TRM). The change included within Revision 18 is summarized as follows:

> TRM sections TR 3.7.7, Spent Fuel Pool (SFP) Cooling System, and TR 3.9.4, Full Core Offload for Cycle 27, will be revised to provide the changes associated with PCR 2001-0036 and the Cycle 29 core offload. PCR 2001-0036 provides the ability to cross-tie the A SFP pump and/or the Standby SFP pump to the B SFP heat exchanger. Analysis has been generated supporting the timing of the Cycle 29 core offload.

Revision 18 of the TRM is considered effective March 15, 2002. Instructions for the necessary changes to your controlled copy of the ITS are as follows:

Volume	Section	Remove	Insert
III	TRM	Cover Page	Cover Page
III	TRM	LEP-i and LEP-ii	LEP-i and LEP-ii
III	TRM Table of Contents	i through iii	i through iii
III	TRM Chapter 3.7	TR 3.7.7-1 and TR 3.7.7-2	TR 3.7.7-1 and TR 3.7.7-2
III	TRM Chapter 3.7	TRB 3.7.7-1 through TRB 3.7.7-6	TRB 3.7.7-1 through TRB 3.7.7-7
III	TRM Chapter 3.9	TR 3.9.4-1 and TR 3.9.4-2	TR 3.9.4-1 through TR 3.9.4-3
III	TRM Chapter 3.9	TRB 3.9.4-1 through TRB 3.9.4-4	TRB 3.9.4-1 through TRB 3.9.4-6

Please contact Tom Harding (extension 3384) if you have any questions.

Thomas L. Harding

R.E. Ginna Nuclear Power Plant

Technical Requirements Manual
TRM

Revision 18

Responsible Manager: Mark D Flaherty
Mark Flaherty

Effective Date: 3/15/02
3/15/2002

Controlled Copy No. 1217

Record Cat.# 4.43.4

TRM TABLE OF CONTENTS

List of Effective Pages
(TRM)

Page	Rev.
TOC	
i	15
ii	15
Section 1.0	
TR 1.0-1	14
Section 2.0	
TR 2.1-1	14
Section 3.0	
TR 3.0-1	14
TR 3.0-2	14
Section 3.1	
TR 3.1.1-1	14
TR 3.1.1-2	14
TR 3.1.1-3	14
TR 3.1.2-1	14
TR 3.1.2-2	14
Section 3.2	
TR 3.2-1	14
Section 3.3	
TR 3.3.1-1	14
TR 3.3.1-2	14
TR 3.3.2-1	14
TR 3.3.2-2	14
TR 3.3.3-1	14
TR 3.3.4-1	14
TR 3.3.4-2	14
TR 3.3.4-3	14
TR 3.3.4-4	14
TR 3.3.4-5	14
TR 3.3.4-6	14
TR 3.3.4-7	14
TR 3.3.5-1	14
TR 3.3.5-2	14
TR 3.3.5-3	14
Section 3.4	
TR 3.4.1-1	14
TR 3.4.1-2	14
TR 3.4.2-1	14
TR 3.4.2-2	14
TR 3.4.2-3	14
TR 3.4.3-1	14
TR 3.4.3-2	14
TR 3.4.3-3	14
TR 3.4.3-4	14
TR 3.4.3-5	14
TR 3.4.3-6	14
Section 3.5	
TR 3.5-1	14
Section 3.6	
TR 3.6-1	14
Section 3.7	
TR 3.7.1-1	14
TR 3.7.1-2	14
TR 3.7.1-3	14
TR 3.7.2-1	14
TR 3.7.2-2	14
TR 3.7.2-3	14
TR 3.7.2-4	14
TR 3.7.2-5	14
TR 3.7.3-1	14
TR 3.7.3-2	14
TR 3.7.3-3	14
TR 3.7.4-1	14
TR 3.7.4-2	14
TR 3.7.4-3	14
TR 3.7.4-4	14
TR 3.7.5-1	14
TR 3.7.5-2	14
TR 3.7.5-3	14
TR 3.7.5-4	14
TR 3.7.5-5	14
TR 3.7.6-1	14
TR 3.7.6-2	14
TR 3.7.7-1	18
TR 3.7.7-2	18
TR 3.7.8-1	15
TR 3.7.8-2	15
Section 3.8	
TR 3.8.1-1	14
TR 3.8.2-1	14
TR 3.8.2-2	14
Section 3.9	
TR 3.9.1-1	14
TR 3.9.2-1	14
TR 3.9.2-2	14
TR 3.9.3-1	14
TR 3.9.4-1	18
TR 3.9.4-2	18
TR 3.9.4-3	18
Section 4.0	
TR 4.0-1	14
Section 5.0	
TR 5.1-1	16
TR 5.1-2	16

List of Effective Pages
(TRM Bases)

Page	Rev.	Page	Rev.	Page	Rev.	Page	Rev.
TOC		**Section 3.7**					
iii	15	TRB 3.7.1-1	14				
		TRB 3.7.2-1	14				
		TRB 3.7.3-1	14				
Section 2.0		TRB 3.7.4-1	14				
		TRB 3.7.5-1	14				
		TRB 3.7.6-1	14				
Section 3.0		TRB 3.7.7-1	18				
		TRB 3.7.7-2	18				
		TRB 3.7.7-3	18				
Section 3.1		TRB 3.7.7-4	18				
		TRB 3.7.7-5	18				
		TRB 3.7.7-6	18				
Section 3.2		TRB 3.7.7-7	18				
		TRB 3.7.8-1	15				
		TRB 3.7.8-2	15				
Section 3.3		TRB 3.7.8-3	15				
Section 3.4		**Section 3.8**					
Section 3.5		**Section 3.9**					
		TRB 3.9.1-1	14				
Section 3.6		TRB 3.9.1-2	14				
		TRB 3.9.1-3	14				
		TRB 3.9.2-1	14				
		TRB 3.9.3-1	14				
		TRB 3.9.4-1	18				
		TRB 3.9.4-2	18				
		TRB 3.9.4-3	18				
		TRB 3.9.4-4	18				
		TRB 3.9.4-5	18				
		TRB 3.9.4-6	18				
		Section 4.0					
		Section 5.0					

3.7 PLANT SYSTEMS

TR 3.7.7 Spent Fuel Pool (SFP) Cooling System

TR 3.7.7 The SFP Cooling System shall be maintained as follows:

a. The SFP water temperature shall be ≥ 50°F and ≤ 150°F; and

b. Two SFP cooling loops shall be OPERABLE, each commensurate with the SFP heat load.

- NOTE -

The SFP heat load and SFP cooling capabilities are determined by Nuclear Engineering Services.

APPLICABILITY: Whenever any irradiated fuel assembly is stored in the SFP, except when compliance with TR 3.9.4 is required due to a Full Core Offload.

ACTIONS

CONDITION	REQUIRED ACTION	COMPLETION TIME
A. SFP temperature not within limit.	A.1 Suspend movement of irradiated fuel assemblies from the reactor to the SFP.	Immediately
	AND	
	A.2 Initiate action to restore SFP temperature to within limit.	Immediately
B. One required SFP cooling loop inoperable.	B.1 Suspend movement of irradiated fuel assemblies from the reactor to the SFP.	Immediately
	AND	
	B.2 Initiate action to restore a second SFP cooling loop to OPERABLE status.	14 days

CONDITION	REQUIRED ACTION	COMPLETION TIME
C. Both required SFP cooling loops inoperable.	C.1 Perform TSR 3.7.7.1.	Once within 1 hour and every 4 hours thereafter
	AND	
	C.2 Initiate action to restore one SFP cooling loop to OPERABLE status.	Prior to the SFP water temperature exceeding 120°F

SURVEILLANCE REQUIREMENTS

SURVEILLANCE		FREQUENCY
TSR 3.7.7.1	Verify SFP temperature is within limit.	24 Hours
TSR 3.7.7.2	Verify power available and any temporary hose connections to the two OPERABLE SFP cooling loops.	7 days

B 3.7 PLANT SYSTEMS

TRB 3.7.7 Spent Fuel Pool (SFP) Cooling System

BASES

BACKGROUND

The Spent Fuel Pool (SFP) Cooling System is designed to remove from the SFP the heat generated by stored spent fuel assemblies.

The SFP Cooling System consists of three SFP pumps, two installed SFP heat exchangers, one SFP Standby Heat Exchanger (which is not normally used), and associated piping, valves, and hoses (see Figure TRB 3.7.7-1). The flow path starts at the common suction from the spent fuel pool to the three SFP pumps, through one or more SFP pumps and one or more SFP heat exchangers, and to the spent fuel pool via the common return line. The primary loop (SFP Loop B) is made up of the SFP Pump B, SFP Heat Exchanger B, and piping. The backup loops include:

a. installed SFP Loop A with the SFP Pump A, SFP Heat Exchanger A, and piping, and

b. a SFP Standby Loop with the SFP Standby Pump, SFP Standby Heat Exchanger, and hoses.

There is also the ability to align the SFP Pump A and SFP Standby Pump individually or in parallel to the SFP Heat Exchanger B. Service water (SW) circulates through the shell while SFP water circulates through the tubes of the SFP heat exchangers. There is also the ability to provide fire water for cooling of the SFP Heat Exchanger A and SFP Standby Heat Exchanger. SFP Cooling System Loop B is sized for 100% of the design SFP heat load. SFP Loop A and the SFP Standby Loop are each capable of removing the normal basis heat load. When the SFP Pump A and the SFP Standby Pump are operated in parallel, through either their designated heat exchangers or through the SFP Heat Exchanger B, they can remove 100% of the design heat load (Ref. 1). Motor-operated valves provide automatic and remote manual isolation of the SW supply to the SFP heat exchangers. These valves close automatically upon coincidence of safety injection and loss of offsite power. Handwheels are provided for manual operation.

The SFP Cooling System is designed to maintain the pool ≤ 120°F during normal refueling conditions and ≤ 150°F during full core discharge operations (Ref. 1). The cooling systems can take a suction from either near the surface of the SFP and/or at a point above the irradiated fuel assemblies, such that a failure of any pipe in the system will not drain the pool to a point where the fuel would be exposed. The cooling system return line to the pool also contains a 0.25 inch vent hole located near the

SFP surface level to prevent siphoning. Control board alarms exist with respect to the SFP level and temperature. These features all help to prevent inadvertent draining of the SFP.

APPLICABLE SAFETY ANALYSES

In accordance with the assumptions of the SFP criticality safety analysis, the pool water temperature is not to be less than 50°F. For structural integrity reasons, the pool water temperature is not to exceed 180°F. In order to provide sufficient time to take corrective action in the event of a SFP Cooling System failure, the pool temperature limit is not to exceed 150°F for all modes of operation including a full core discharge.

Consideration of a single passive failure for SFP cooling is not required by the NRC Standard Review Plan (SRP) (contained in NUREG-0800) and is not a part of the licensing basis for the Ginna Station SFP Cooling System. Per Section 9.1.3 of the SRP, for the "maximum normal heat load" (of the spent fuel pool) there should be suitable redundancy of components so that safety functions can be performed assuming a single active failure of a component coincident with the loss of offsite power. For the "abnormal maximum heat load" (defined in the SRP as full core unload), a single active failure need not be considered (see TR 3.9.4).

Therefore, the requirement for two 100% SFP cooling loops is based on being able to provide cooling for the "maximum normal heat load" assuming a single active failure of a component coincident with the loss of offsite power. For the "abnormal maximum heat load" during a full core offload, the basis for this requirement does not include consideration of a single active failure.

TR

The SFP water temperature is required to be ≥ 50°F and ≤ 150°F. The specified lower water temperature limit is an assumption of the SFP criticality safety analysis, and as such it is the minimum allowed while storing fuel assemblies within the SFP. Additional margin to the criticality safety analysis is not provided since the fuel assemblies do not contribute to the overcooling affect, only the cooling system. The specified water upper temperature limit provides sufficient margin to the assumptions of the SFP structural integrity. As such, it is the maximum allowed while storing irradiated fuel assemblies within the SFP.

To ensure that the SFP temperature can be maintained within the required limit, two SFP Cooling loops must be OPERABLE. This requirement provides for 100% backup capability assuming a single active failure of a component coincident with the loss of offsite power as described below.

SFP cooling loop options (at least two must be met):

1. SFP Loop A (normal)

   - SFP Pump A has power available
   - SFP Heat Exchanger A is capable of providing cooling water with the ability to remove the decay heat load of the irradiated fuel assemblies stored within the SFP

2. SFP Loop B

   - SFP Pump B has power available
   - SFP Heat Exchanger B is capable of providing cooling water with the ability to remove the decay heat load of the irradiated fuel assemblies stored within the SFP

3. SFP Standby Loop (normal)

   - SFP Standby Pump has power available
   - SFP Standby Heat Exchanger has been staged, the temporary hoses have been connected (to SW if loop is redundant to the SFP Loop B and to fire water if the loop is redundant to SFP Loop A (normal)) and leak checked, and is capable of providing cooling water with the ability to remove the decay heat load of the irradiated fuel assemblies stored within the SFP

4. SFP Loop A (cross-connect)

   (This option cannot be used in combination with options 1, 2, or 5.)

   - SFP Pump A has power available
   - SFP Heat Exchanger B is capable of providing cooling water with the ability to remove the decay heat load of the irradiated fuel assemblies stored within the SFP

5. SFP Standby Loop (cross-connect)

   (This option cannot be used in combination with options 2, 3, or 4.)

   - SFP Standby Pump has power available
   - SFP Heat Exchanger B is capable of providing cooling water with the ability to remove the decay heat load of the irradiated fuel assemblies stored within the SFP

- temporary hoses have been connected and leak checked

SFP Heat Exchanger A and the SFP Standby Heat Exchanger have the ability to utilize fire water for cooling in lieu of SW to provide for increased redundancy. The temporary electrical power source for the SFP Standby Pump may also be varied to provide for increased redundancy.

Also included in the determination of OPERABILITY are all necessary support systems not addressed by this TR (e.g., service water, fire water, electrical). The support systems must be capable of performing their support function per the definition of OPERABLE-OPERABILITY in ITS Section 1.1.

The TR is modified by a note. The SFP heat load from the irradiated fuel assemblies stored within the SFP is a variable based on the total number of assemblies stored, the power history of the individual assemblies, and the time since the assemblies were last irradiated. The SFP Cooling System heat removal capabilities are also a variable based on the temperature and flow rate of the cooling source, SW or fire water. The SFP heat load and the SFP Cooling System heat removal capabilities are determined by Nuclear Engineering Services and provided, as necessary, based on plant conditions.

APPLICABILITY

This TR applies whenever any irradiated fuel assembly is stored in the SFP, to maintain the assumptions of the criticality safety analysis and to provide sufficient margin to the assumptions of the SFP structural integrity. During Full Core Offload conditions, compliance with TR 3.7.7 is suspended, and specific requirements applicable during a full core discharge are covered by TR 3.9.4, "Full Core Offload".

ACTIONS

A.1 and A.2

If the SFP temperature is not below the upper limit, steps should be taken to preclude the assumptions of the SFP structural integrity from being exceeded. Suspending any operation that would increase SFP decay heat load, such as discharging a fuel assembly from the reactor to the SFP, is a prudent action under this condition. If the SFP temperature is not above the lower limit, the assumptions of the criticality safety analyses are not met. Therefore, actions shall be taken immediately to suspend movement of irradiated fuel assemblies from the reactor to the SFP.

With the potential for exceeding the assumptions of the SFP criticality safety analysis or the SFP structural integrity, corrective actions to restore the SFP temperature to within limit shall be initiated immediately.

B.1 and B.2

With one of the required SFP cooling loops inoperable, suspending any operation that would increase SFP decay heat load, such as discharging an irradiated fuel assembly from the reactor to the SFP, is a prudent action under this condition. Therefore, actions shall be taken immediately to suspend movement of irradiated fuel assemblies from the reactor to the SFP.

With the suspension of fuel discharge into the SFP then a second SFP cooling loop must be restored to OPERABLE status within 14 days. In this condition the remaining OPERABLE SFP cooling loop is adequate to remove the decay heat load. The 14 day Completion Time is adequate to perform typical maintenance activities associated with a SFP cooling loop and takes into account the large heat sink capabilities of the SFP and the redundancy of active components.

C.1 and C.2

If no SFP cooling loop is OPERABLE, there will be no forced cooling of the SFP and as such the SFP temperature must be monitored more frequently until the cooling is restored. This monitoring is accomplished by performing surveillance TSR 3.7.7.1 to verify SFP temperature is within limit. The Completion Time of 1 hour and every 4 hours thereafter is sufficient due to the large heat sink of the SFP and slow heatup rate.

Actions must also be initiated to restore one SFP cooling loop to OPERABLE status prior to the SFP temperature exceeding 120°F. The 120°F is not a safety requirement but is a limit set for normal operation and provides adequate margin to the 150°F limit.

SURVEILLANCE REQUIREMENTS

TSR 3.7.7.1

This TSR verifies that the SFP temperature is within the required limits. The temperature in the SFP must be checked periodically to ensure the SFP criticality safety analysis assumptions and structural integrity are met. The 24 hour Frequency is appropriate due to the large volume of water in the pool and the relatively slow heatup and cool down rate.

Verification of SFP water temperature is normally accomplished by the use of TIA-635, which also provides a SFP high temperature alarm to alert the operators of an increasing SFP temperature.

TSR 3.7.7.2

Verification that the required pumps are OPERABLE ensures that an additional SFP pump can be placed in operation, if needed, to maintain decay heat removal. Verification is performed by verifying proper breaker alignment and power available to the required pumps. It also includes verification of any temporary hoses that are required to be connected and leak checked. The Frequency of 7 days is considered reasonable in view of other administrative controls available and has been shown to be acceptable by operating experience.

REFERENCES

1. UFSAR, Section 9.1.3.

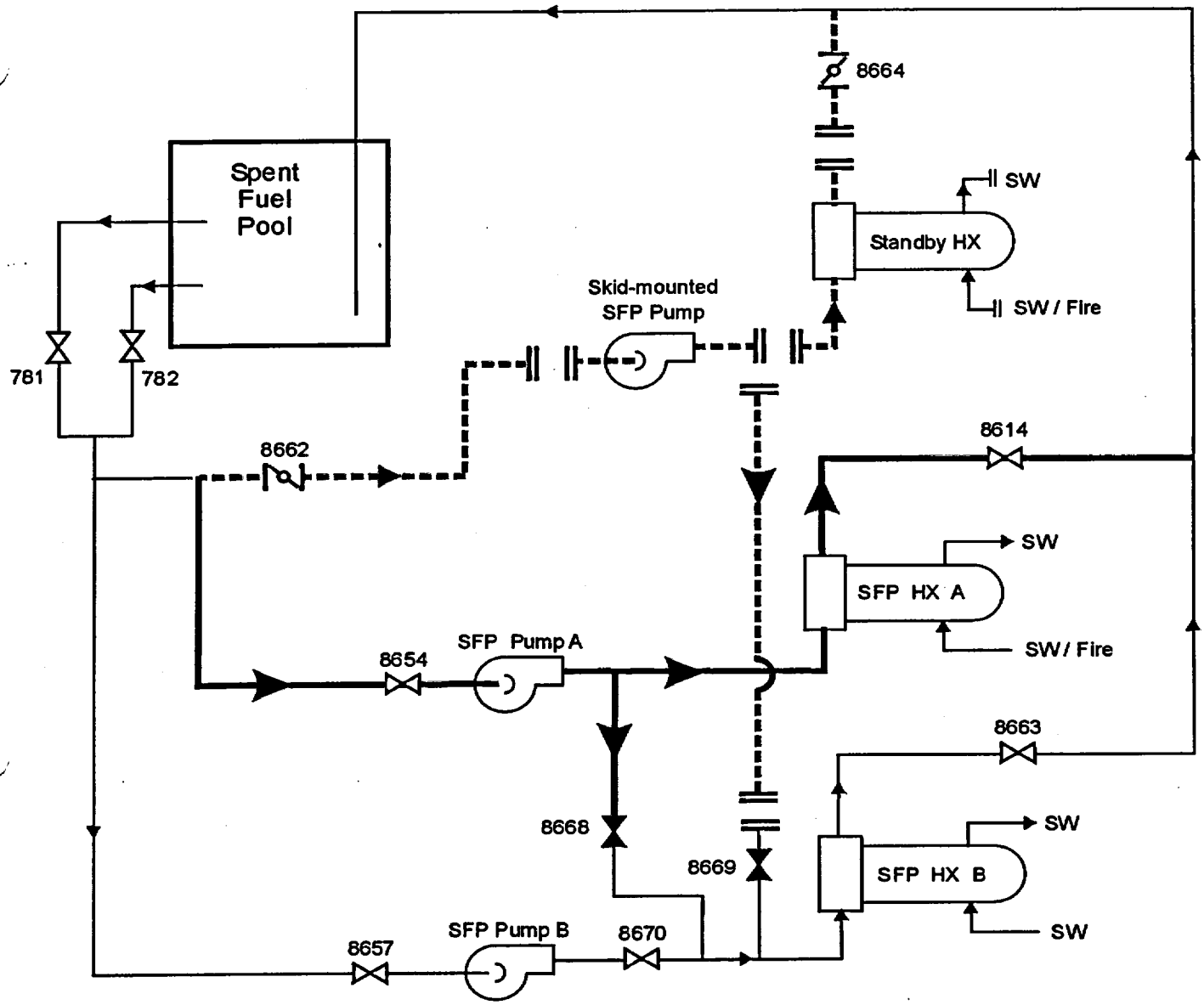

For illustration only

Legend:

Loop B Flowpath

Loop A Flowpaths

Standby Loop Flowpaths

Figure TRB 3.7.7-1
SFP Cooling System

3.9 REFUELING OPERATIONS

TR 3.9.4 Full Core Offload

TR 3.9.4 During the removal of all irradiated fuel assemblies from the reactor to the spent fuel pool (SFP), the following shall be met:

a. The SFP water temperature shall be ≥ 50°F and ≤ 150°F;

b. Two SFP Cooling Systems shall be OPERABLE, each commensurate with the SFP heat load; and

c. The combination of the following screenhouse bay water temperature (T_{sw}) and time after shutdown shall be met:

SFP Cooling System Options	Time After Shutdown (hours)		
	$T_{sw} \leq 50°F$	$T_{sw} \leq 60°F$	$T_{sw} \leq 85°F$
SFP Loop B	100	129	332
SFP Loop A (normal) AND SFP Standby Loop (normal)	100	129	332
SFP Loop A (cross-connect) AND SFP Standby Loop (cross-connect)	100	129	332
SFP Loop A (cross-connect) OR SFP Standby Loop (cross-connect)	124	163	435
SFP Loop A (normal) OR SFP Standby Loop (normal)	421	570	1300

- NOTE -

- The SFP heat load and SFP cooling system capabilities are determined by Nuclear Engineering Services.
- The combination of screenhouse bay water temperature (T_{sw}) and minimum time after shutdown is cycle/outage specific and needs to be re-evaluated for each full core offload.

APPLICABILITY: During the complete removal of irradiated fuel assemblies from the reactor to the SFP, and until the reactor has been refueled.

ACTIONS

CONDITION	REQUIRED ACTION	COMPLETION TIME
A. SFP temperature not within limit.	A.1 Suspend movement of irradiated fuel assemblies from the reactor to the SFP.	Immediately
	AND	
	A.2 Initiate action to restore SFP temperature to within limit.	Immediately
B. One required SFP Cooling System inoperable.	B.1 Suspend movement of irradiated fuel assemblies from the reactor to the SFP.	Immediately
	AND	
	B.2 Initiate action to restore a second SFP Cooling System to OPERABLE status.	Immediately
C. Combination of screenhouse bay water temperature (T_{sw}) and minimum time after shutdown not met.	C.1 Suspend movement of irradiated fuel assemblies from the reactor to the SFP.	Immediately

SURVEILLANCE REQUIREMENTS

SURVEILLANCE		FREQUENCY
TSR 3.9.4.1	Verify SFP temperature is within limit.	12 Hours
TSR 3.9.4.2	Verify two SFP Cooling Systems are OPERABLE, each commensurate with the SFP heat load associated with the full core offload.	Once prior to moving irradiated fuel assemblies from the reactor to the SFP and every 12 hours thereafter
TSR 3.9.4.3	Verify combination of the screenhouse bay water temperature (T_{sw}) and minimum time after shutdown met.	Once prior to moving irradiated fuel assemblies from the reactor to the SFP and every 24 hours thereafter

B 3.9 REFUELING OPERATIONS

TRB 3.9.4 Full Core Offload

BASES

BACKGROUND

The Background section for TRM Bases 3.7.7, "Spent Fuel Pool (SFP) Cooling System" is applicable to these Bases.

APPLICABLE SAFETY ANALYSES

The Applicable Safety Analyses section for TRM Bases 3.7.7, "Spent Fuel Pool (SFP) Cooling System" is applicable to these Bases.

TR

The SFP water temperature is required to be ≥ 50°F and ≤ 150°F. The specified lower water temperature limit is an assumption of the SFP criticality safety analysis, and as such it is the minimum allowed while storing fuel assemblies within the SFP. Additional margin to the criticality safety analysis is not provided since the fuel assemblies do not contribute to the overcooling effect, only the cooling system. The specified water upper temperature limit provides sufficient margin to the assumptions of the SFP structural integrity. As such, it is the maximum allowed while storing irradiated fuel assemblies within the SFP.

To ensure that the SFP temperature can be maintained within the required limit, two SFP Cooling Systems must be OPERABLE. This requirement provides for 100% backup capability assuming a loss of offsite power.

SFP Cooling System options:

(based on SFP heat load and SFP loop cooling capabilities, more than one SFP cooling loop may be required to comprise an OPERABLE SFP Cooling System)

1. <u>SFP Loop A</u> (normal)

   - SFP Pump A has power available
   - SFP Heat Exchanger A is capable of providing cooling water with the ability to remove the decay heat load of the irradiated fuel assemblies stored within the SFP

2. SFP Loop B

   - SFP Pump B has power available
   - SFP Heat Exchanger B is capable of providing cooling water with the ability to remove the decay heat load of the irradiated fuel assemblies stored within the SFP

3. SFP Standby Loop (normal)

   - SFP Standby Pump has power available
   - SFP Standby Heat Exchanger has been staged, the temporary hoses have been connected and leak checked, and is capable of providing cooling water with the ability to remove the decay heat load of the irradiated fuel assemblies stored within the SFP

4. SFP Loop A (cross-connect)

   (This option cannot be used in combination with option 1.)

   - SFP Pump A has power available
   - SFP Heat Exchanger B is capable of providing cooling water with the ability to remove the decay heat load of the irradiated fuel assemblies stored within the SFP

5. SFP Standby Loop (cross-connect)

   (This option cannot be used in combination with option 3.)

   - SFP Standby Pump has power available
   - SFP Heat Exchanger B is capable of providing cooling water with the ability to remove the decay heat load of the irradiated fuel assemblies stored within the SFP
   - temporary hoses have been connected and leak checked

SFP Heat Exchanger A and the SFP Standby Heat Exchanger have the ability to utilize fire water for cooling in lieu of SW to provide for increased redundancy. The temporary electrical power source for the SFP Standby Pump may also be varied to provide for increased redundancy.

Also included in the determination of OPERABILITY are all necessary support systems not addressed by this TR (e.g., service water, fire water, electrical). Single active or passive failures are not required to be considered within the support systems for the purpose of this TR; however, the support systems must be capable of performing their support function per the definition of OPERABLE-OPERABILITY in ITS Section 1.1.

The SFP heat load will increase as the number of irradiated fuel assemblies stored in the SFP increases. In order to maintain the SFP temperature below the limit of 150°F, the irradiated fuel assemblies must be held in the core for a minimum amount of time following reactor shutdown to ensure that the total SFP heat load is less than the heat removal capability of the SFP Cooling System. Since the heat removal capability of the SFP Cooling System is a function of the cooling source, analyses have been performed to establish the required decay time following reactor shutdown in relation to screenhouse bay water temperature (T_{sw}).

It is possible for the SFP Loop A and the SFP Standby Loop by themselves to each comprise a system capable of removing the decay heat of the stored irradiated fuel assemblies stored in the SFP based on time after shutdown and screenhouse bay water temperature (T_{sw}).

The TR is modified by two notes. The first note is associated with the SFP heat load and SFP Cooling System capabilities. The SFP heat load from the irradiated fuel assemblies stored within the SFP is a variable based on the total number of assemblies stored, the power history of the individual assemblies, and the time since the assemblies were last irradiated. The SFP Cooling System heat removal capabilities are also a variable based on the temperature and flow rate of the cooling source, SW or fire water. The SFP heat load and the SFP Cooling System heat removal capabilities are determined by Nuclear Engineering Services and provided, as necessary, based on plant conditions.

The second note has been provided to emphasize that the listed minimum time after shutdown as a function of screenhouse bay water temperature (T_{sw}) are only applicable for a specific offload. These values require review by Nuclear Engineering Services each outage that a full core offload is expected, to confirm that they are still bounding.

APPLICABILITY

This TR applies during any plant outage when it is intended to completely defuel the reactor and specifies the requirements that must be met prior to initiating the offload of irradiated fuel assemblies and up to the point at which the reactor has been refueled. These specific requirements supersede those of TR 3.7.7, "Spent Fuel Pool (SFP) Cooling System".

ACTIONS

A.1 and A.2

If the SFP temperature is not below the upper limit, steps should be taken to preclude the assumptions of the SFP structural integrity from being exceeded. Suspending any operation that would increase SFP decay heat load, such as discharging a fuel assembly from the reactor to the SFP, is a prudent action under this condition. If the SFP temperature is not above the lower limit, the assumptions of the criticality safety analyses are not met. Therefore, actions shall be taken immediately to suspend movement of irradiated fuel assemblies from the reactor to the SFP.

With the potential for exceeding the assumptions of the SFP criticality safety analysis or the SFP structural integrity, corrective actions to restore the SFP temperature to within limit shall be initiated immediately.

B.1 and B.2

With one of the required SFP cooling systems inoperable, suspending any operation that would increase SFP decay heat load, such as discharging an irradiated fuel assembly from the reactor to the SFP, is a prudent action under this condition. Therefore, actions shall be taken immediately to suspend movement of irradiated fuel assemblies from the reactor to the SFP.

If only one SFP Cooling System is OPERABLE, redundancy for SFP cooling is lost. Action must be initiated to restore a second system to OPERABLE status. The immediate Completion Time reflects the importance of maintaining the availability of redundancy for SFP heat removal during the time that there is a high heat load in the SFP. The action to restore must continue until the second SFP Cooling System is restored to OPERABLE status.

C.1

If the screenhouse bay temperature (T_{sw}) and time after shutdown requirement is not met, suspending any operation that would increase SFP decay heat load, such as discharging an irradiated fuel assembly from the reactor to the SFP, is a prudent action under this condition. Therefore, actions shall be taken immediately to suspend movement of irradiated fuel assemblies from the reactor to the SFP. With the screenhouse bay temperature (T_{sw}) and time after shutdown requirements not met, the assumptions of the SFP Cooling System heat removal analyses are invalid and the potential exists for the SFP temperature to exceed the limit required for SFP structural integrity.

SURVEILLANCE REQUIREMENTS

TSR 3.9.4.1

This TSR verifies that the SFP temperature is within the required limits. The temperature in the SFP must be checked periodically to ensure the SFP criticality safety analysis assumptions and structural integrity are met. The 12 hour Frequency is appropriate due to the large volume of water in the pool and reflects the importance of monitoring the SFP temperature during the time that there is a high heat load in the SFP.

Verification of SFP water temperature is normally accomplished by the use of TIA-635, which also provides a SFP high temperature alarm to alert the operators of an increasing SFP temperature.

TSR 3.9.4.2

This TSR requires verification prior to commencing a complete core offload of irradiated fuel assemblies that two SFP Cooling Systems are OPERABLE, each of which must be able to meet the SFP heat removal requirement associated with the complete offload.

Verification that two SFP Cooling Systems are OPERABLE includes verifying that the respective pump has power available and the respective heat exchanger is capable of providing cooling water with the ability to remove the decay heat load of the irradiated fuel assemblies planned to be stored within the SFP. This includes any temporary hoses that are required to be connected and leak checked.

The 12 hour Frequency is appropriate due to the large volume of water in the pool and reflects the importance of verifying SFP Cooling System redundancy during the time that there is a high heat load in the SFP.

TSR 3.9.4.3

This TSR requires verification of the screenhouse bay water temperature (T_{sw}) (normally performed by using either TT-3001 or TT-2977) and time after shutdown of the irradiated fuel assemblies to confirm that the assumptions of the SFP Cooling System heat removal analyses are being met. This surveillance is required prior to commencing a complete core offload of irradiated fuel assemblies and every 24 hours thereafter, which is considered reasonable based on operating experience.

REFERENCES

1. UFSAR, Section 9.1.3.