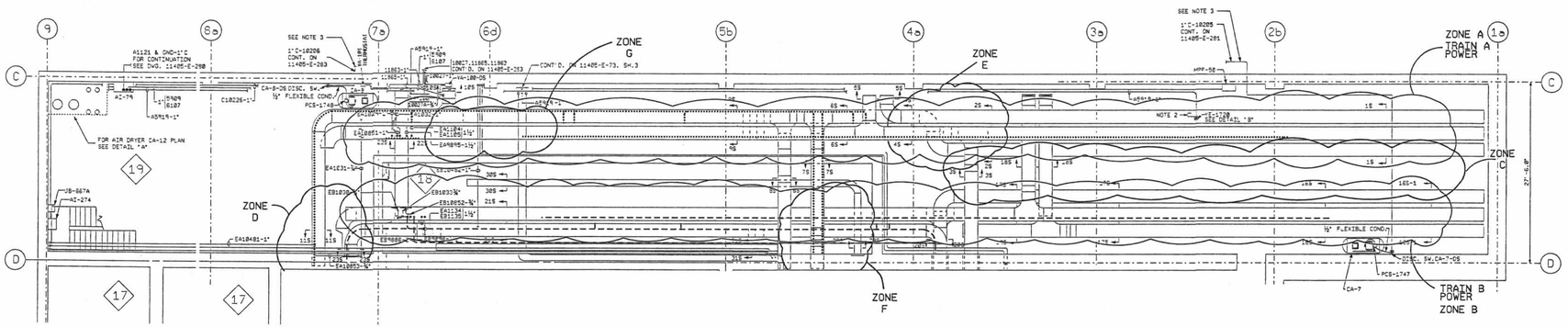

D-1

FORT CALHOUN STATION		
FIRE AREA 32 APPENDIX R CABLE LOCATIONS		
FIGURE 1		
REV.SHL	APVD	REV
FILE RM19-1		