Docket

Docket No. 50-255

RECEIVED
APR 29 1981
U.S. NUCLEAR REGULATORY COMMISSION

Mr. David P. Hoffman
Nuclear Licensing Administrator
Consumers Power Company
1945 W. Parnall Road
Jackson, Michigan 49201

Dear Mr. Hoffman:

SUBJECT: ORDER FOR MODIFICATION OF LICENSE CONCERNING PRIMARY COOLANT SYSTEM PRESSURE ISOLATION VALVES

This letter transmits an Order for Modification of License which revises the Technical Specifications for Provisional Operating License No. DPR-20 for the Palisades Plant. The change is a result of the information you provided in response to our 10 CFR 50.54(f) letter of February 23, 1980, regarding primary coolant system pressure isolation valves. Based upon our review of your response, as well as other previously docketed information, we have concluded that a WASH-1400 Event V valve configuration exists at your facility and that corrective action as defined in the attached Order is necessary.

Attached to the Order for Modification of License is the Technical Evaluation Report (TER) which supports the Order; and the plant Technical Specifications which will ensure public health and safety over the operating life of your facility. We are aware that there may be editorial corrections to the attached TER. Please note that the Technical Specifications correctly delineate the requirements for your facility.

In addition to Event V valve configurations, we are continuing our efforts to review other configurations located at high pressure/low pressure system boundaries for their potential risk contribution to an intersystem LOCA. Therefore, further activity regarding the broader topic of intersystem LOCA's may be expected in the future.

8105040006
P

A copy of the enclosed Order is being filed with the Office of the Federal Register for publication.

Sincerely,

Dennis M. Crutchfield, Chief
Operating Reactors Branch #5
Division of Licensing

Enclosure:
Order for Modification
of License

cc w/enclosure:
See next page

DISTRIBUTION

Docket
NRC PDR
Local PDR
ORB Reading
HDenton
ECAse
DEisenhut
RPurple
TNovak
RTedesco
GLainas
JRoe
HSmith
TWambach
PPolk
DCrutchfield
OELD
OI&E (3)
TBarnhart (4)
ACRS (10)
OPA (Calra Miles)
NSIC
TERA
Scretariat (SECY)
RDiggs
JHeltemes, AEOD

OFFICE	DL: ORB #5	DL: ORB #5	DL: ORB #2	DL: ORB#5	DL: AD/SA	DL: DIR	NRR: DDIR
SURNAME	TWambach:cc	HSmith	PPolk	DCrutchfield	GLainas	DEisenhut	ECase
DATE	3/06/81	3/27/81	4/14/81	3/6/81	4/16/81	4-20-81	

UNITED STATES
NUCLEAR REGULATORY COMMISSION
WASHINGTON, D. C. 20555

April 20, 1981

Docket No. 50-255
LS05-81-04-021

Mr. David P. Hoffman
Nuclear Licensing Administrator
Consumers Power Company
1945 W. Parnall Road
Jackson, Michigan 49201

Dear Mr. Hoffman:

SUBJECT: ORDER FOR MODIFICATION OF LICENSE CONCERNING PRIMARY COOLANT SYSTEM PRESSURE ISOLATION VALVES

This letter transmits an Order for Modification of License which revises the Technical Specifications for Provisional Operating License No. DPR-20 for the Palisades Plant. The change is a result of the information you provided in response to our 10 CFR 50.54(f) letter of February 23, 1980, regarding primary coolant system pressure isolation valves. Based upon our review of your response, as well as other previously docketed information, we have concluded that a WASH-1400 Event V valve configuration exists at your facility and that corrective action as defined in the attached Order is necessary.

Attached to the Order for Modification of License is the Technical Evaluation Report (TER) which supports the Order; and the plant Technical Specifications which will ensure public health and safety over the operating life of your facility. We are aware that there may be editorial corrections to the attached TER. Please note that the Technical Specifications correctly delineate the requirements for your facility.

In addition to Event V valve configurations, we are continuing our efforts to review other configurations located at high pressure/low pressure system boundaries for their potential risk contribution to an intersystem LOCA. Therefore, further activity regarding the broader topic of intersystem LOCA's may be expected in the future.

A copy of the enclosed Order is being filed with the Office of the Federal Register for publication.

Sincerely,

Dennis M. Crutchfield

Dennis M. Crutchfield, Chief
Operating Reactors Branch #5
Division of Licensing

Enclosure:
Order for Modification
of License

cc w/enclosure:
See next page

cc
M. I. Miller, Esquire
Isham, Lincoln & Beale
Suite 4200
One First National Plaza
Chicago, Illinois 60670

Mr. Paul A. Perry, Secretary
Consumers Power Company
212 West Michigan Avenue
Jackson, Michigan 49201

Judd L. Bacon, Esquire
Consumers Power Company
212 West Michigan Avenue
Jackson, Michigan 49201

Myron M. Cherry, Esquire
Suite 4501
One IBM Plaza
Chicago, Illinois 60611

Ms. Mary P. Sinclair
Great Lakes Energy Alliance
5711 Summerset Drive
Midland, Michigan 48640

Kalamazoo Public Library
315 South Rose Street
Kalamazoo, Michigan 49006

Township Supervisor
Covert Township
Route 1, Box 10
Van Buren County, Michigan 49043

Office of the Governor (2)
Room 1 - Capitol Building
Lansing, Michigan 48913

Director, Criteria and Standards
Division
Office of Radiation Programs
(ANR-460)
U. S. Environmental Protection
Agency
Washington, D. C. 20460

U. S. Environmental Protection
Agency
Federal Activities Branch
Region V Office
ATTN: EIS COORDINATOR
230 South Dearborn Street
Chicago, Illinois 60604

Charles Bechhoefer, Esq., Chairman
Atomic Safety and Licensing Board
Panel
U. S. Nuclear Regulatory Commission
Washington, D. C. 20555

Dr. George C. Anderson
Department of Oceanography
University of Washington
Seattle, Washington 98195

Dr. M. Stanley Livingston
1005 Calle Largo
Santa Fe, New Mexico 87501

Resident Inspector
c/o U. S. NRC
P. O. Box 87
South Haven, Michigan 49090

Palisades Plant
ATTN: Mr. J. G. Lewis
Plant Manager
Covert, Michigan 49043

William J. Scanlon, Esquire
2034 Pauline Boulevard
Ann Arbor, Michigan 48103

UNITED STATES OF AMERICA
NUCLEAR REGULATORY COMMISSION

In the Matter of	)	
	)	
CONSUMERS POWER COMPANY	)	
	)	Docket No. 50-255
Palisades Plant	)	
	)	
	)	

ORDER FOR MODIFICATION OF LICENSE

I

The Consumers Power Company (the licensee) holds Provisional Operating License No. DPR-20, which authorizes the licensee to operate the Palisades Plant (the facility) at power levels not in excess of 2530 megawatts (thermal) rated power. The facility, which is located at the licensee's site in Van Buren County, Michigan, is a pressurized water reactor (PWR) used for the commercial generation of electricity.

II

The Reactor Safety Study (RSS), WASH-1400, identified in a PWR an inter-system loss of coolant accident (LOCA) which is a significant contributor to risk of core melt accidents (Event V). The design examined in the RSS contained in-series check valves isolating the high pressure Primary Coolant System (PCS) from the Low Pressure Injection System (LPIS) piping. The scenario which leads to the Event V accident is initiated by the failure of these check valves to function as a pressure isolation barrier. This causes an overpressurization and rupture of the LPIS low pressure piping which results in a LOCA that bypasses containment.

8105040011

In order to better define the Event V concern, all light water reactor licensees were requested by letter dated February 23, 1980, to provide the following in accordance with 10 CFR 50.54(f):

1. Describe the valve configurations and indicate if an Event V isolation valve configuration exists within the Class I boundary of the high pressure piping connecting PCS piping to low pressure system piping; e.g., (1) two check valves in series, or (2) two check valves in series with a motor operated valve (MOV);
2. If either of the above Event V configurations exist, indicate whether continuous surveillance or periodic tests are being performed on such valves to ensure integrity. Also indicate whether valves have been known, or found, to lack integrity; and
3. If either of the above Event V configurations exist, indicate whether plant procedures should be revised or if plant modifications should be made to increase reliability.

In addition to the above, licensees were asked to perform individual check valve leak testing prior to plant startup after the next scheduled outage.

By letter dated March 18, 1980, the licensee responded to our February letter. Based upon the review of this response as well as the review of previously docketed information for the facility, I have concluded in consonance with the attached Safety Evaluation (Attachment 1) that one or more valve configuration(s) of concern exist at the facility. The attached Technical Evaluation Report (TER) (Attachment 2) provides, in Section 4.0, a tabulation of the subject valves.

The staff's concern has been exacerbated due not only to the large number of plants which have an Event V configuration(s) but also because of recent unsatisfactory operating experience. Specifically, two plants have leak tested check valves with unsatisfactory results. At Davis-Besse, a pressure isolation check valve in the LPIS failed and the ensuing investigation found that valve internals had become disassembled. At the Sequoyah Nuclear Plant, two Residual Heat Removal (RHR) injection check valves and one RHR recirculation check valve failed because valves jammed open against valve over-travel limiters.

It is, therefore, apparent that when pressure isolation is provided by two in-series check valves and when failure of one valve in the pair can go undetected for a substantial length of time, verification of valve integrity is required. Since these valves are important to safety, they should be tested periodically to ensure low probability of gross failure. As a result, I have determined that periodic examination of check valves must be undertaken by the licensee as provided in Section III below to verify that each valve is seated properly and functioning as a pressure isolation device. Such testing will reduce the overall risk of an inter-system LOCA. The testing mandated by this Order may be accomplished by direct volumetric leakage measurement or by other equivalent means capable of demonstrating that leakage limits are not exceeded in accordance with Section 2.2 of the attached TER.

In view of the operating experiences described above and the potential consequences of check valve failure, I have determined that prompt action is necessary to increase the level of assurance that multiple pressure isolation barriers are in place and will remain intact. Therefore, the public health, safety and interest require that this modification of Provisional Operating License No. DPR-20 be immediately effective.

III

Accordingly, pursuant to Section 161i of the Atomic Energy Act of 1954, as amended, and the Commission's regulations in 10 CFR Parts 2 and 50, IT IS HEREBY ORDERED THAT EFFECTIVE IMMEDIATELY, Provisional Operating License No. DPR-20 is modified by the addition of the following requirements:

1. Implement Technical Specifications (Attachment 3) which require periodic surveillance over the life of the plant and which specify limiting conditions for operation for PCS pressure isolation valves.
2. If check valves have not been (a) individually tested within 12 months preceding the date of the Order, and (b) found to comply with the leakage rate criteria set forth in the Technical Specifications described in Attachment 3, the MOV in each line shall be closed within 30 days of the effective date of this Order and quarterly Inservice Inspection (ISI) MOV cycling ceased until the check valve tests have been satisfactorily accomplished. (Prior to closing the MOV, procedures shall be implemented and operators trained to assure

that the MOV remains closed. Once closed, the MOV shall be tagged closed to further preclude inadvertent valve opening).

3. The MOV shall not be closed as indicated in paragraph 2 above unless a supporting safety evaluation has been prepared. If the MOV is in an emergency core cooling system (ECCS), the safety evaluation shall include a determination as to whether the requirements of 10 CFR 50.46 and Appendix K to 10 CFR Part 50 will continue to be satisfied with the MOV closed. If the MOV is not in an ECCS, the safety evaluation shall include a determination as to whether operation with the MOV closed presents an unreviewed safety question as defined in 10 CFR 50.59(a)(2). If the requirements of 10 CFR 50.46 and Appendix K have not been satisfied, or if an unreviewed safety question exists as defined in 10 CFR 50.59, then the facility shall be shut down within 30 days of the date of this Order and remain shutdown until check valves are satisfactorily tested in accordance with the Technical Specifications set forth in Attachment 3.

4. The records of the check valve tests required by this Order shall be made available for inspection by the NRC's Office of Inspection and Enforcement.

IV

The licensee or any other person who has an interest affected by this Order may request a hearing on this Order within 25 days of its publication in the Federal Register. A request for hearing shall be submitted to the Secretary, U.S. Nuclear Regulatory Commission, Washington, D.C. 20555. A copy of the request shall also be sent to the Executive Legal Director at the same address, and to Judd L. Bacon, Esquire, Consumers Power Company, 212 West Michigan Avenue, Jackson, Michigan 49201, attorney for the licensee. If a hearing is requested by a person other than the licensee, that person shall describe, in accordance with 10 CFR 2.714(a)(2), the manner in which his or her interest is affected by this Order. ANY REQUEST FOR A HEARING SHALL NOT STAY THE IMMEDIATE EFFECTIVENESS OF THIS ORDER.

If a hearing is requested by the licensee or other person who has an interest affected by this Order, the Commission will issue an order designating the time and place of any such hearing. If a hearing is held, the issues to be considered at such a hearing shall be:

(a) Whether the licensee should be required to individually leak test check valves in accordance with the Technical Specifications set forth in Attachment 3 to this Order.

(b) Whether the actions required by Paragraphs 2 and 3 of Section III of this Order must be taken if check valves have not been tested within 12 months preceding the date of this Order.

Operation of the facility on terms consistent with this Order is not stayed by the pendency of any proceedings on this Order. In the event that a need for further action becomes apparent, either in the course of proceedings on this Order or any other time, the Director will take appropriate action.

FOR THE NUCLEAR REGULATORY COMMISSION

Darrell G. Eisenhut, Director
Division of Licensing

Effective Date: April 20, 1981
Bethesda, Maryland

Attachments:
1. Safety Evaluation Report
2. Technical Evaluation Report
3. Technical Specifications

Attachment 1

UNITED STATES
NUCLEAR REGULATORY COMMISSION
WASHINGTON, D. C. 20555

SAFETY EVALUATION REPORT
PALISADES PLANT
PRIMARY COOLANT SYSTEM PRESSURE ISOLATION VALVES
(WASH-1400, EVENT V)

1.0 Introduction

The Reactor Safety Study (RSS), WASH-1400, identified in a PWR an intersystem loss of coolant accident (LOCA) which is a significant contributor to risk of core melt accidents (Event V). The design examined in the RSS contained in-series check valves isolating the high pressure Primary Coolant System (PCS) from the Low Pressure Injection System (LPIS) piping. The scenario which leads to the Event V accident is initiated by the failure of these check valves to function as a pressure isolation barrier. This causes an overpressurization and rupture of the LPIS low pressure piping which results in a LOCA that bypasses containment.

In order to better define the Event V concern, all light water licensees were requested by 10 CFR 50.54(f) letter, dated February 23, 1980, to identify valve configurations of concern and prior valve test results, if any. By letter dated March 18, 1980, the licensee responded to our request and this information was subsequently transmitted to our contractor, the Franklin Research Center for verification that the licensee had correctly identified the subject valve configurations.

2.0 Evaluation

In order to prepare the attached Technical Evaluation Report (TER) it was necessary that the contractor verify and evaluate the licensee's response to our February 1980 letter. The NRC acceptance criteria used by Franklin were based on WASH-1400 findings, probabilistic analyses and appropriate Standard Review Plan requirements. With respect to the verification of the licensee's response to our information request, the Franklin evaluation was based on FSAR information, ISI/IST site visit data, and other previously docketed information. The attached Franklin TER correctly identifies the subject valve configurations.

3.0 Conclusion

Based on our review of the Franklin TER we find that the valve configurations of concern have been correctly identified. Since periodic testing of these PCS pressure isolation valves will reduce the probability of an intersystem LOCA we, therefore, conclude that the requirement to test these valves should be incorporated into the plant's Technical Specifications.

Dated: April 20, 1981

8105040015

Attachment 2

TECHNICAL EVALUATION REPORT

PRIMARY COOLANT SYSTEM PRESSURE ISOLATION VALVES

CONSUMERS POWER COMPANY
PALISADES UNIT 1

NRC DOCKET NO. 50-255

NRC TAC NO. 12912

NRC CONTRACT NO. NRC-03-79-118

FRC PROJECT C5257

FRC TASK 245

Prepared by

Franklin Research Center
The Parkway at Twentieth Street
Philadelphia, PA 19103

Author: P. N. Noell
T. C. Stilwell
FRC Group Leader: P. N. Noell

Prepared for

Nuclear Regulatory Commission
Washington, D.C. 20555

Lead NRC Engineer: P. J. Polk

October 24, 1980

This report was prepared as an account of work sponsored by an agency of the United States Government. Neither the United States Government nor any agency thereof, or any of their employees, makes any warranty, expressed or implied, or assumes any legal liability or responsibility for any third party's use, or the results of such use, of any information, apparatus, product or process disclosed in this report, or represents that its use by such third party would not infringe privately owned rights.

8105040022

Franklin Research Center
A Division of The Franklin Institute
The Benjamin Franklin Parkway, Phila., Pa. 19103 (215) 448-1000

1.0 INTRODUCTION

The NRC has determined that certain isolation valve configurations in systems connecting the high-pressure Primary Coolant System (PCS) to lower-pressure systems extending outside containment are potentially significant contributors to an intersystem loss-of-coolant accident (LOCA). Such configurations have been found to represent a significant factor in the risk computed for core melt accidents.

The sequence of events leading to the core melt is initiated by the concurrent failure of two in-series check valves to function as a pressure isolation barrier between the high-pressure PCS and a lower-pressure system extending beyond containment. This failure can cause an overpressurization and rupture of the low-pressure system, resulting in a LOCA that bypasses containment.

The NRC has determined that the probability of failure of these check valves as a pressure isolation barrier can be significantly reduced if the pressure at each valve is continuously monitored, or if each valve is periodically inspected by leakage testing, ultrasonic examination, or radiographic inspection. The NRC has established a program to provide increased assurance that such multiple isolation barriers are in place in all operating Light Water Reactor plants designated by DOR Generic Implementation Activity B-45.

In a generic letter of February 23, 1980, the NRC requested all licensees to identify the following valve configurations which may exist in any of their plant systems communicating with the PCS: 1) two check valves in series or 2) two check valves in series with a motor-operated valve (MOV).

For plants in which valve configurations of concern are found to exist, licensees were further requested to indicate: 1) whether, to ensure integrity of the various pressure isolation check valves, continuous surveillance or periodic testing was currently being conducted, 2) whether any check valves of concern were known to lack integrity, and 3) whether plant procedures should be revised or plant modifications be made to increase reliability.

Franklin Research Center (FRC) was requested by the NRC to provide technical assistance to NRC's B-45 activity by reviewing each licensee's submittal

against criteria provided by the NRC and by verifying the licensee's reported findings from plant system drawings. This report documents FRC's technical review.

2.0 CRITERIA

2.1 Identification Criteria

For a piping system to have a valve configuration of concern, the following five items must be fulfilled:

1) The high-pressure system must be connected to the Primary Coolant System;

2) there must be a high-pressure/low-pressure interface present in the line;

3) this same piping must eventually lead outside containment;

4) the line must have one of the valve configurations shown in Figure 1; and

5) the pipe line must have a diameter greater than 1 inch.

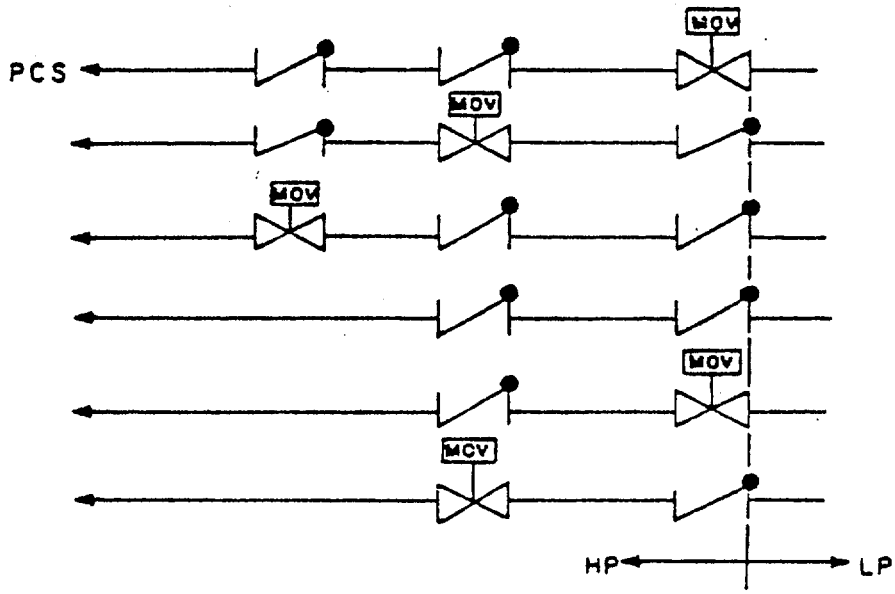

Figure 1. Valve Configurations Designated by the NRC To Be Included in This Technical Evaluation

2.2 Periodic Testing Criteria

For licensees whose plants have valve configurations of concern and choose to institute periodic valve leakage testing, the NRC has established criteria for frequency of testing, test conditions, and acceptable leakage rates. These criteria may be summarized as follows:

2.2.1 Frequency of Testing

Periodic hydrostatic leakage testing* on each check valve shall be accomplished every time the plant is placed in the cold shutdown condition for refueling, each time the plant is placed in a cold shutdown condition for 72 hours if testing has not been accomplished in the preceding 9 months, each time any check valve may have moved from the fully closed position (i.e., any time the differen- tial pressure across the valve is less than 100 psig), and prior to returning the valve to service after maintenance, repair, or replacement work is performed.

2.2.2 Hydrostatic Pressure Criteria

Leakage tests involving pressure differentials lower than function pressure differentials are permitted in those types of valves in which service pressure will tend to diminish the overall leakage channel opening, as by pressing the disk into or onto the seat with greater force. Gate valves, check valves, and globe-type valves, having function pressure differential applied over the seat, are examples of valve applications satisfying this requirement. When leakage tests are made in such cases using pressures lower than function maximum pressure differential, the observed leakage shall be adjusted to function maximum pressure differential value. This adjustment shall be made by calculation appropriate to the test media and the ratio between test and function pressure differential, assuming leakage to be directly proportional to the pressure differential to the one-half power.

2.2.3 Acceptable Leakage Rates:

- Leakage rates less than or equal to 1.0 gpm are considered acceptable.
- Leakage rates greater than 1.0 gpm but less than or equal to 5.0 gpm are considered acceptable if the latest measured rate has not exceeded the rate determined by the previous test by an amount

*To satisfy ALARA requirements, leakage may be measured indirectly (as from the performance of pressure indicators) if accomplished in accordance with approved procedures and supported by computations showing that the method is capable of demonstrating valve compliance with the leakage criteria.

that reduces the margin between the measured leakage rate and the maximum permissible rate of 5.0 gpm by 50% or greater.

- Leakage rates greater than 1.0 gpm but less than or equal to 5.0 gpm are considered unacceptable if the latest measured rate exceeded the rate determined by the previous test by an amount that reduces the margin between measured leakage rate and the maximum permissible rate of 5.0 gpm by 50% or greater.
- Leakage rates greater than 5.0 gpm are considered unacceptable.

3.0 TECHNICAL EVALUATION

3.1 Licensee's Response to the Generic Letter

In response to the NRC's generic letter [Ref. 1], the Consumers Power Company (CPC) stated [Ref. 2] that, "The Palisades Plant does not have an Event V isolation valve configuration as described in Figure 1 of the NRC letter dated February 23, 1980; however, the following valve configurations were reviewed.

Low-Pressure Safety Injection (LPSI)
Charging
High-Pressure Safety Injection (HPSI)

Other systems are connected to the PCS [Primary Coolant System] but are isolated by the containment isolation signal and were, therefore, excluded from this review.

Both the Charging and HPSI Systems consist of high-pressure piping between the pumps and the PCS and do not fall within the scope of the NRC February 23, 1980 letter."

The licensee further stated, "Surveillance is performed to verify the seating of check Valve 'A' [closest to PCS]. This surveillance is conducted during each plant start-up from cold shutdown by observation of the [pressure indicator-controller] PIC. Use of the PIC allows for a continuous pressure monitoring on the low-pressure side of the subject check valves. The PCS isolation check valves have not caused any significant integrity problems."

It is FRC's understanding that, with CPC's concurrence, the NRC will direct CPC to change its Plant Technical Specifications as necessary to ensure

that periodic leakage testing (or equivalent testing) is conducted in accordance with the criteria of Section 2.2.

3.2 FRC Review of Licensee's Response

FRC has reviewed the licensee's response against the plant-specific Piping and Instrumentation Diagrams (P&IDs) [Ref. 3] that might have the valve configurations of concern.

FRC has also reviewed the efficacy of instituting periodic testing for the check valves involved in this particular application with respect to the reduction of the probability of an intersystem LOCA in High- and Low-Pressure Safety Injection pipe lines.

In its review of the P&IDs [Ref. 3] for Palisades Unit 1, FRC found the following two piping systems to be of concern:

- The High- and Low-Pressure Safety Injection Systems are connected to the PCS by a single, common piping line to each of the cold leg sides of the four PCS loops, 1A, 1B, 2A, and 2B.
- Both the High- and Low-Pressure Safety Injection Systems have two check valves and a motor-operated valve (MOV) in one of the series configurations of concern.

In both systems the high-pressure/low- pressure interface is on the upstream side of the MOV. The valves for each system are listed below:

High-Pressure Safety Injection

<u>Loop 1A, cold leg</u>

high-pressure check valve, 3101
high-pressure check valve, 3104
high-pressure MOV, 3007, normally closed (n.c.)

<u>Loop 1B, cold leg</u>

high-pressure check valve, 3116
high-pressure check valve, 3119
high-pressure MOV, 3009, n.c.

Loop 2A, cold leg

high-pressure check valve, 3131
high-pressure check valve, 3134
high-pressure MOV, 3011, n.c.

Loop 2B, cold leg

high-pressure check valve, 3146
high-pressure check valve, 3149
high-pressure MOV, 3013, n.c.

Low-Pressure Safety Injection

Loop 1A, cold leg

high-pressure check valve, 3101
high-pressure check valve, 3103
high-pressure MOV, 3008, n.c.

Loop 1B, cold leg

high-pressure check valve, 3116
high-pressure check valve, 3118
high-pressure MOV, 3010, n.c.

Loop 2A, cold leg

high-pressure check valve, 3131
high-pressure check valve, 3133
high-pressure MOV, 3021, n.c.

Loop 2B, cold leg

high-pressure check valve, 3146
high-pressure check valve, 3148
high-pressure MOV, 3014, n.c.

In accordance with the criteria of Section 2.0, FRC found no other valve configurations of concern existing in this plant.

FRC reviewed the effectiveness of instituting periodic leakage testing of the check valves in these lines as a means of reducing the probability of an intersystem LOCA occurring. FRC found that introducing a program of check valve leakage testing in accordance with the criteria summarized in Section 2.0 will be an effective measure in substantially reducing the probability of an intersystem LOCA occurring in these lines, and a means of increasing the probability that these lines will be able to perform their safety-related functions. It is also a step toward achieving a corresponding reduction in the plant probability of an intersystem LOCA in Palisades Unit 1.

4.0 CONCLUSION

Based on the previously docketed information and drawings made available for FRC review, FRC found that all four cold-leg branches common to both the High and Low-Pressure Safety Injection systems in Palisades Unit 1 contain a valve configuration of concern (identified in Figure 1). Thus, if the licensee's review of the valving configuration contained in the cold-leg branches of both the High and Low-Pressure Safety Injection systems confirms FRC's finding, then the valve configurations of concern existing in Palisades Unit 1 incorporate the valves listed in Table 1.0.

If CPC modifies the Plant Technical Specifications for Palisades Unit 1 to incorporate periodic testing (as delineated in Section 2.2) for the check valves itemized in Table 1.0, then FRC considers this an acceptable means of achieving plant compliance with the NRC staff objectives of Reference 1.

Table 1.0

Primary Coolant System Pressure Isolation Valves

System	Check Valve No.	Allowable Leakage*
High-Pressure Safety Injection		
Loop 1A, cold leg	3101 3104	
Loop 1B, cold leg	3116 3119	
Loop 2A, cold leg	3131 3134	
Loop 2B, cold leg	3146 3149	
Low-Pressure Safety Injection		
Loop 1A, cold leg	3103	
Loop 1B, cold leg	3118	
Loop 2A, cold leg	3133	
Loop 2B, cold leg	3148	

*To be provided by the licensee at a future date in accordance with Section 2.2.3.

5.0 REFERENCES

1. Generic NRC letter, dated 2/23/80, from Mr. D. G. Eisenhut, Department of Operating Reactors (DOR), to Mr. D. P. Hoffman, Consumers Power Company (CPC).

2. Consumers Power Company's response to NRC's letter, dated 3/18/80, from Mr. D. P. Hoffman (CPC) to Mr. D. G. Eisenhut (DOR).

3. List of examined P&IDs:

   Bechtel drawings of Palisades Unit 1:

   M-200 (Rev. 7)

   M-201 (Rev. 13)

M-202 (Rev. 14)

M-203 (Rev. 12)

M-204 (Rev. 12)

M-205 (Rev. 18)

M-209 (Rev. 13)

M-219 (Rev. 8)

M-220 (Rev. 11)

ORDER FOR MODIFICATION OF LICENSE

(EVENT V)

PALISADES PLANT

DOCKET NO. 50-255

Delete (where appropriate and insert the following pages in the Technical Specifications:

Pages
3-30
3-30a*
4-17
4-18 *
4-19

* There are no changes to the provisions contained on this page: it is included for pagaination purposes only.

g. A maximum of one high-pressure safety injection pump shall be OPERABLE whenever the temperature of one or more of the PCS cold legs is ≤ 250°F.

3.3.3 Prior to returning to the Power Operation Condition after every time the plant has been placed in the Refueling Shutdown Condition, or the Cold Shutdown Condition for more than 72 hours and testing of Specification 4.3.h has not been accomlished in the previous 9 months, or prior to returning the check valves in Table 4.3.1 to service after maintenance, repair or replacement, the following conditions shall be met:

a. All pressure isolation valves listed in Table 4.3.1 shall be functional as a pressure isolation device, except as specified in b. Valve leakage shall not exceed the amounts indicated.

b. In the event that integrity of any pressure isolation valve specified in Table 4.3.1 cannot be demonstrated, at least two valves in each high pressure line having a non-functional valve must be in and remain in, the mode corresponding to the isolated condition.[1]

c. If Specification a. and b. cannot be met, an orderly shutdown shall be initiated and the reactor shall be in hot shutdown condition within 12 hours, and cold shutdown within the next 24 hours.

[1] Motor-operated valves shall be placed in the closed position and power supplies deenergized.

Basis

The normal procedure for starting the reactor is, first, to heat the primary coolant to near operating temperature by running the primary coolant pumps. The reactor is then made critical by withdrawing control rods and diluting boron in the primary coolant.[1] With this mode of start-up, the energy stored in the primary coolant during the approach to criticality is substantially equal to that during power operation and, therefore, all engineered safety features and auxiliary cooling systems are required to be fully operable. During low-temperature physics tests, there is a negligible amount of stored energy in the primary coolant; therefore, an accident comparable in

inspection techniques that have been proven practical, and the conclusions of the evaluation shall be used as appropriate to update the inspection program.

f. Surveillance of the regenerative heat exchanger and primary coolant pump flywheels shall be performed as indicated in Table 4.3.2.

g. A surveillance program to monitor radiation induced changes in the mechanical and impact properties of the reactor vessel materials shall be maintained as described in Section 4.5.3 of the FSAR. The specimen removal schedule shall be as indicated in Table 4.3.3.

h. Periodic leakage testing (a), (b) on each check valve listed in Table 4.3.1 shall be accomplished prior to returning to the Power Operation Condition after every time the plant has been placed in the Refueling Shutdown Condition, or the Cold Shutdown Condition for more than 72 hours if such testing has not been accomplished within the previous 9 months, and prior to returning the check valves to service after maintenance, repair or replacement work is performed on the valves.

i. Whenever integrity of a pressure isolation valve listed in Table 4.3.1 cannot be demonstrated and credit is being taken for compliance with Specification 3.3.3.b., the integrity of the remaining check valve in each high pressure line having a leaking valve shall be determined and recorded daily and the position of the other closed valve located in that high pressure line shall be recorded daily.

(a) To satisfy ALARA requirements, leakage may be measured indirectly (as from the performance of pressure indicators) if supported by computations showing that the method is capable of demonstrating valve compliance with the leakage criteria.

(b) Reduced pressure testing is acceptable (see footnote 5 to Table 4.3.1). Minimum test differential pressure shall not be less than 150 psid.

BASIS

The inspection program specified places major emphasis on the areas of highest stress concentration as determined by general design evaluation and experience with similar systems.[1] In addition, that portion of the reactor vessel shell welds which will be subjected to a fast neutron dose sufficient to change ductility properties will be inspected. The inspections will rely primarily on ultrasonic methods utilizing up-to-date analyzing equipment and trained personnel. Preoperational inspections will establish base conditions by determining indications that might occur from geometrical or metallurgical sources and from discontinuities in weldments or plates which might cause undue concern on a postservice inspection. To the extent applicable, based upon the existing design and construction of the plant, the requirements of Section XI of the Code shall be complied with. Significant exceptions are detailed in the requests for relief which have received NRC approval and are contained in the Class 1, Class 2 and Class 3 Long-Term Inspection Plans.

REACTOR VESSEL SURVEILLANCE SPECIMENS

Table 4.3.3 is consistent with the surveillance program as presented in the FSAR.[2] However, the withdrawal schedule has been modified to reflect the slightly different wall fluence values resulting from removal of the thermal shield.

REFERENCES

(1) FSAR, Section 4.5.6.

(2) FSAR, Section 4.5.3.

TABLE 4.3.1

PRIMARY COOLANT SYSTEM PRESSURE ISOLATION VALVES

System	Valve No.	Maximum[a] Allowable Leakage
High Pressure Safety Injection		
Loop 1A, Cold Leg	3101	5.0 gpm
	3104	5.0 gpm
Loop 1B, Cold Leg	3116	5.0 gpm
	3119	5.0 gpm
Loop 2A, Cold Leg	3131	5.0 gpm
	3134	5.0 gpm
Loop 2B, Cold Leg	3146	5.0 gpm
	3149	5.0 gpm
Low Pressure Safety Injection		
Loop 1A, Cold Leg	3103	5.0 gpm
Loop 1B, Cold Leg	3118	5.0 gpm
Loop 2A, Cold Leg	3133	5.0 gpm
Loop 2B, Cold Leg	3148	5.0 gpm

Footnote:

(a)
1. Leakage rates less than or equal to 1.0 gpm are considered acceptable.
2. Leakage rates greater than 1.0 gpm but less than or equal to 5.0 gpm are considered acceptable if the latest measured rate has not exceeded the rate determined by the previous test by an amount that reduces the margin between measured leakage rate and the maximum permissible rate of 5.0 gpm by 50% or greater.
3. Leakage rates greater than 1.0 gpm but less than or equal to 5.0 gpm are considered unacceptable if the latest measured rate exceeded the rate determined by the previous test by an amount that reduces the margin between measured leakage rate and the maximum permissible rate of 5.0 gpm by 50% or greater.
4. Leakage rates greater than 5.0 gpm are considered unacceptable.
5. Measured leakage rates must be adjusted for test pressures less than the maximum potential pressure differential across the valve by assuming leakage to be directly proportional to the pressure differential to the one-half power.