Appendix D

PUBLIC RADIATION SAFETY
SIGNIFICANCE DETERMINATION PROCESS

This process is used in conjunction with Inspection Procedure 71122, "Public Radiation Safety," to determine the risk significance of a finding.

I. RADIOACTIVE EFFLUENT RELEASE PROGRAM

A. Objective

This branch of the logic diagram focuses on the licensee's routine (i.e., non-accident) radioactive effluent release program. It assesses the licensees ability to monitor and maintain radioactive effluents ALARA (i.e., the design dose objectives contained in Appendix I to 10 CFR Part 50 and 10 CFR 20.1301(d)). Being able to assess dose from radioactive effluents and maintain radiation doses to a member of the public within Appendix I design objectives is the success criterion.

B. Basis

The regulatory basis for requiring radiological effluent monitoring programs is given in General Design Criterion 60, "Control of releases of radioactive materials to the environment," of Appendix A, "General Design Criteria for Nuclear Power Plants," to 10 CFR Part 50, "Licensing of Production and Utilization Facilities." Criterion 60 requires a licensee to provide for a means to control the release of radioactive materials in gaseous and liquid effluents during normal reactor operation, including anticipated operational occurrences. An additional requirement is in Section IV.B.1 of Appendix I to 10 CFR Part 50. This section requires a licensee to provide data on the quantities of radioactive material released in liquid and gaseous effluents to assure that such releases are within the ALARA design objectives. This data, pursuant to 10 CFR 50.36a, is reported to the NRC annually. There is also a requirement in 10 CFR 20.1301(d), that requires power reactors to comply with the U.S. Environmental Protection Agency's environmental radiation standards in 40 CFR Part 190.

II. SDP DETERMINATION PROCESS

Is there a finding in the licensee's radiological effluent monitoring program that is contrary to NRC regulations or the licensee's Technical Specifications (TS), Offsite Dose Calculation Manual (ODCM), or procedures? If yes, was the licensee able to assess the dose from the release of radioactive effluent and what is the dose impact (as calculated by the licensee) of the event? If there was no radiological release associated with the event (no dose impact to a member of the public) then there is minimal "risk" and the SDP classifies it as GREEN. The licensee is responsible to resolve the finding. The NRC will periodically inspect the effectiveness of the licensee's corrective action program.

If the licensee failed to have any data in which to assess the dose (i.e., no monitor data, no independent sample data, no actual release sample data, etc.), then the finding would be WHITE. This would be a rare situation. Usually the licensee has enough plant data (i.e., from tank volumes and periodic sample analysis of the radioactive material in the tank) to be able to reconstruct a source term and calculate a bounding dose from the unmonitored release.

If the event resulted in an effluent release of radioactive material that, based on the methodology in the licensee's ODCM, exceeded the dose values in Appendix I to 10 CFR Part 50 and/or 10 CFR 20.1301(d) but is less than 0.1 rem, the SDP classifies the event as WHITE.

NOTE: The licensee has a Performance Indicator (PI) in this area that uses dose values equal to the quarterly dose values given in the TS or the ODCM. This SDP is not to be used to "double count" the PI. If a situation results in which the dose exceeds Appendix I values because of multiple effluent releases which exceeded the PI threshold it should not automatically be assessed as a degraded cornerstone. The SDP is to be used to assess the significance of a finding on an action or event by the licensee which was contrary to NRC regulations, the licensee's TS, ODCM, or procedures.

If the event resulted in effluent release of radioactive material that, based on the methodology in the licensee's ODCM, exceeded the annual public dose limit in 10 CFR Part 20 of 0.1 rem but is less than 0.5 rem, the SDP classifies the event as YELLOW.

If the event resulted in effluent release of radioactive material that, based on the methodology in the licensee's ODCM, exceeded 0.5 rem, the SDP classifies the event as RED.

III. RADIOACTIVE ENVIRONMENTAL MONITORING PROGRAM

A. Objective

This branch of the logic diagram focuses on the licensee's ability to operate an effective radioactive environmental monitoring program.

B. Basis

The regulatory basis for requiring radiological environmental monitoring programs is given in General Design Criterion 64, "Monitoring Radioactivity Releases," of Appendix A, "General Design Criteria for Nuclear Power Plants," to 10 CFR Part 50, "Licensing of Production and Utilization Facilities." Criterion 64 requires a licensee to provide for a means for monitoring the plant environs for radioactivity that may be released during normal operations, including anticipated operational occurrences, and from postulated accidents. An additional requirement is in Section IV.B.3 of Appendix I to 10 CFR Part 50. This section requires that the monitoring program identify changes in the use of unrestricted areas (e.g., for agricultural purposes) to permit modifications in the monitoring program for evaluating doses to individuals from principal pathways of exposure.

Radiological environmental monitoring is important both for normal operations, as well as in the event of an accident. During normal operations, environmental monitoring verifies the effectiveness of the plant systems used for controlling the release of radioactive effluents. It also is used to check that the levels of radioactive material in the environment do not exceed the projected values used to license the plant. For an accident, the program provides an additional means to estimate the dose to members of the public.

IV. SDP DETERMINATION PROCESS

Is there a finding in the licensee's radiological environmental monitoring program that is contrary to NRC regulations or the licensee's Technical Specifications (TS), Offsite Dose Calculation Manual (ODCM), or procedures? If yes, the question is; did it impair the licensee's ability to assess the impact of its radiological effluents on the environment? This means that a few of the environmental sampling stations were not operable or that not all the required environmental samples were collected or analyzed. Even though the licensee was missing data, an assessment of the environmental impact was still able to be done. For this case, the risk significance is GREEN.

The more significant finding is where the licensee failed to assess the environmental impact from its radioactive effluents. To answer the question with a yes means that the licensee's overall program is degraded. It does not mean that a few environmental samples over the course of a year were not taken, or improperly analyzed. A failure in one or two parts of the licensee's program is not sufficient to reach a WHITE significance determination. A failure to evaluate a required pathway (i.e., no valid data to be able to assess the environmental impact for that pathway) would result in a YES answer to the decision diamond and result in a WHITE risk significance finding. This is a high threshold to reach. Historically, inspection findings have documented that samples are missed, or a land use census was not performed, or the air samplers were broken for extended periods of time or they were not in the correct location. Overall, these findings have resulted in lost data, but not a complete failure to be able to assess the impact on the environment from that pathway, therefore a GREEN risk significance finding is typical for environmental monitoring programs.

V. RADIOACTIVE MATERIAL CONTROL PROGRAM

A. Objective

This branch of the logic diagram focuses on the licensee's radioactive material control program. It assesses the licensee's ability to prevent the inadvertent release and/or loss of control of licensed radioactive material to an unrestricted area that can cause a radiation dose to members of the public.

B. Basis

10 CFR Part 20 contains the requirements for the control and disposal of licensed radioactive material. At a licensee's facility, any equipment or material that came into contact with licensed radioactive material or that had the potential to be contaminated

with radioactive material of plant origin and are to be removed from the facility must be surveyed for the presence of licensed radioactive material. This is because NRC regulations, with one exception in 10 CFR 20.2005, provide no minimum level of licensed radioactive material that can be disposed of in a manner other than as radioactive waste or transferred to a licensed recipient.

VI. SDP DETERMINATION PROCESS

Is there an finding in the licensee's radiological material control program that is contrary to NRC regulations? If yes, the question is what is the dose impact (as calculated by the licensee) of the event? If the dose impact was not more than 0.005 rem total effective dose equivalent (TEDE) and there were not more than 5 of these events in the inspection period, then the SDP classification is GREEN. If the dose impact was greater than 0.005 rem TEDE or there were more than 5 occurrences that were not above 0.005 rem TEDE in the inspection period (i.e., two years, based on 8 rolling calendar quarters), then the SDP classification is WHITE. If the dose impact is greater than 0.1 rem TEDE (exceeds 10 CFR Part 20 public dose limit), the SDP classification is YELLOW. If the dose impact was greater than 0.5 rem TEDE, the SDP classification is RED.

Historically, these events have had calculated doses well below 0.001 rem TEDE, thus, in most cases a GREEN significance determination is likely. However, if there were more than 5 events in the assessment period where licensed radioactive material was released, there is a potential for the cumulative dose from the occurrences to be 0.005 rem TEDE or greater. This will result in a WHITE classification.

It should be noted that discrete radioactive particles (also known as hot particles or fuel fleas) are not applicable to this program if the dose from a discrete radioactive particle does not result in a TEDE dose as defined in 10 CFR Part 20. Generally, the dose from the particle is to a very small localized area of the skin and is not equivalent to the risk of a TEDE dose. However, if the discrete radioactive particle is of such a magnitude that a TEDE dose (i.e., equal to or greater than 1 mrem) is received, then the finding should be evaluated in the SDP. While the skin dose from discrete radioactive particle is not evaluated in the SDP, except as described above, it would still be counted as an occurrence.

VII. TRANSPORTATION

A. Objective

This branch of the logic diagram focuses on the licensee's radioactive material packaging and transportation program. It assesses the licensee's ability to safely transport radioactive material on public roadways in accordance with regulations.

The SDP described below is intended to be used only for those radioactive material shipments classified as Schedule 5 (LSA-1) through 11 (Fissile Material), as described

in NUREG-1660, U.S. Specific Schedules of Requirements for Transport of Specified Types of Radioactive Material Consignments.

B. Basis

The regulatory basis for the transportation program is contained in 10 CFR Parts 20, 61, and 71, and Department of Transportation regulations contained in 49 CFR Parts 170-189.

VIII. SDP DETERMINATION PROCESS

A. Radiation Limits Exceeded

The limits on radiation levels of a package offered for transport are found in 49 CFR 173. These include both limits for external and removable surface contamination. The external radiation level limits vary somewhat as a function of the type of shipment (non-exclusive and exclusive- use). Specific limits exist also as a function of distance from the package and for the area occupied by the driver. These external radiation limits are found in 49 CFR 173.441 and are duplicated in 10 CFR Part 71.47 (as related to Type B radioactive material shipments).

The limits for removable (non-fixed) surface contamination on a package are found in 49 CFR 173.443 (Table 11) and vary as a function of type of shipment (non-exclusive and exclusive use), and vary relative to the type of nuclides (alpha, and beta/gamma emitters). Additionally for certain exclusive-use shipments, the surface contamination levels can be ten times higher during the shipment.

The external radiation level branch provides for a graded approach for assessing the level of significance of findings. Exceeding any of the limits and increasing multiplies of the limits provide for WHITE, YELLOW and RED findings.

The removable surface contamination level branch provides for a graded approach for assessing the level of significance of findings. Exceeding any of the limits and increasing multiplies of the limits provide for WHITE, YELLOW and RED findings. Note that to have a RED finding, the surface contamination levels must not only exceed 100 times the limit, but the unrestricted area must have been contaminated as well.

B. Breach of Package During Transit

DOT and NRC shipping regulations relative to packaging requirements are diverse. Generally, these requirements become more stringent as a function of several factors. As the quantity, type, form (i.e.,readily dispersible) of radioactive material varies (increases), then the potential impact on the public (dose) increases as a result of a package breach during transit. For purposes of significant risk determinations, a package breach means a loss of containment. The actual or potential impact on the public from a package breach then is a function of the package contents. For Type A packages normal conditions of transport are assumed; this includes rough handling tests as specified in the DOT regulations (i.e., drop, water, puncture and crush tests). Thus, during normal conditions of transport Type A packages are designed to prevent the loss

or dispersal of radioactive material contents, and maintain radiation levels below limits. If a breach occurs under conditions more adverse than the rough handling tests , then a breach finding would not be appropriate unless it can be shown that licensee negligence contributed to the loss of containment. If a breach occurs during transit with equal to or less than the normal conditions of transport and the licensee failed to meet transportation requirements (resulting in the breach), then a breach finding is appropriate.

Type B packages must meet the performance and packaging requirements of Type A, as well as beyond normal conditions of transport. They are designed to withstand hypothetical serious accident conditions with no loss of containment (no breach), as measured by leak-rate testing. These design considerations and criteria are contained in 10 CFR Part 71.73, and include free fall, crush, puncture, fire, and water immersion. Given these rigorous design requirements, any breach of a Type B package in transit (in less than hypothetical accident conditions) is a candidate for a YELLOW or RED finding. If the licensee failed to meet the transportation requirements, and this failure contributed to the breach, then a breach finding is appropriate. The significant risk determination after a design basis accident will be determined on a case-by-case basis.

The less-than-or-equal-to Type A shipment branch provides for a graded approach for assessing the level of significance of findings. If a breach in a Type A container occurs as a result of the failure to meet transportation requirements, but no loss of control of the contents is evident, then the finding is GREEN. An example could be a solidified radwaste liner, inside a Type A package where the closure lid was loose (not tightened down). In this case, given the form of the radioactive contents, loss of control of the material is very unlikely. However, on a similar shipment, failure to properly torque the closure lid bolts (35 ft-lbs versus required 45 ft-lbs) is not a breach, assuming the licensee analysis demonstrates that package integrity would be maintained during the normal conditions of transport.

While power reactor shipping history has demonstrated that serious mishaps are highly unlikely, if a transportation incident occurs with a package breach, then public dose consequences could result. The next two blocks in the Type A branch (assuming a breach) focus on public and occupational doses that occur as a result of the loss of control of package contents. These are actual doses to real individuals, and depending on the level, would lead to either YELLOW or RED findings. Note that for a member of the public, the dose would in almost all cases be an estimate. Designated on-scene trained responders (e.g., local county Hazmat emergency team) would be designated occupational workers, subject the occupation dose limits.

The greater-than-Type A branch provides for a YELLOW finding, assuming no loss of control of package contents. A RED finding would result if package contents control was lost. An example of a YELLOW finding is where a receiving facility finds the incoming shipment (irradiated components) package's drain valve on the package open -- a direct pathway to environment, but no potential for loss of control of materials (assuming normal conditions of transport). A RED finding is appropriate for the same "open valve" scenario if the package contents were spent fuel -- fission product gases released continuously to the environs during the shipment, assuming normal conditions of transport. However, in the event of a transportation accident that led to loss of fuel

integrity, public dose consequences could exceed acceptable levels before adequate protective measures could be implemented.

C. Low Level Burial Ground Access

Nuclear power plants ship low-level waste (LLW) to licensed LLW burial grounds. These facilities (typically licensed by the host State) have the responsibility and authority to grant access to licensees for disposal of LLW. These LLW burial grounds have specific disposal criteria (aside from DOT/NRC shipping regulations) that licensees must meet (e.g., Waste Characterization, Part 61.56). In the past, some NRC licensees did not meet the acceptance standards of the LLW burial ground, and were issued temporary bans (i.e., the burial ground would not accept LLW from non-compliant licensees for extended time periods). As the receiving party, the LLW burial facilities are required to inspect for certain non-compliances with shipping regulations. Failure to meet these and the disposal grounds requirements can weigh in on the LLW facilities decision to prohibit access to the LLW burial site. While recent NRC licensee performance has been excellent, if a licensee is banned for an extended period of time (typically one month or more, based on inadequate performance), the finding is YELLOW.

D. Part 61 Finding

If a licensee ships Class C or greater waste and it is determined that the waste was under-classified, contrary to the requirements of 10 CFR 61.55 (e.g., waste classified as Class A or Class B, but later found to be Class C or greater), then the finding is WHITE. In addition, if a licensee ships Class A or Class B waste and it is determined that the waste was under-classified, contrary to the requirements of 10 CFR Part 61.55 (e.g., waste classified as Class A, but later found to be Class B), and resulted in the improper disposal of the waste, contrary to the requirements of 10 CFR 61.56, then the finding is WHITE. If the under-classification of Class A or Class B waste did not result in the improper disposal of the waste (i.e., not resulting in an actual increase in risk), then the finding is GREEN.

Determination of the acceptability of the waste for disposal is made by the applicable regulatory agency for the waste disposal facility; either NRC or the Agreement State. Agreement States have the authority under the Atomic Energy Act to promulgate regulations that are compatible with NRC's disposal regulations in 10 CFR Part 61. They also have the authority and responsibility to issue disposal facility licenses under their Part 61 compatible regulations, and to disposition a non-compliance by a licensee.

E. Failure to Make Notifications or Provide Emergency Information

This branch of the logic diagram focuses on vital communication and information, and notification requirements that must be provided by the licensee. Shippers of hazardous materials are required to provided emergency response information. Failure to provide these required notifications could seriously hamper or prevent the ability of the federal, state and local agencies to adequately respond as needed to transportation events and accidents. By hampering or preventing this regulatory response, the public health and safety could be negatively impacted, with an attendant loss of public confidence.

These requirements (in 49 CFR Part 172, Subpart G, Section 172.600) apply to any shipment which is required to have shipping papers. Shipments of excepted radioactive material packages (limited quantities, "empty" packages, etc) are not subject to the emergency response information.

NRC regulations (10 CFR 71.97) require advance notification to state governors for shipments of irradiated reactor fuel and nuclear waste under certain conditions. These notifications include quantity and form, and type of shipping container required. Notifications must be made in a timely manner to all the states hosting the radioactive material shipment. Additionally, 10 CFR 20.1906 requires receivers of certain packages of radioactive materials to perform timely external and surface contamination radiation monitoring upon receipt of the packages. If applicable radiation limits are exceeded, the receiving licensee must then report the event to the appropriate NRC Regional Office.

For Block N1 (10 CFR 71.97 non-compliance), if the licensee fails to make the required notifications before the shipment entered the State's boundary (crossed the State line) for interstate shipments, the finding would be WHITE. For intrastate shipments, if the shipment was put on public roads/rails before the Governor received the required notification, then a finding would be WHITE. Note that any other timeliness non-compliance (e.g., notification not postmarked at least 7 days before the 7 day shipment period), these findings would be GREEN.

For Block N2 (49 CFR 172.602 non-compliance), if the licensee fails to provide the required emergency response information to the shipment carrier (the shipment leaves the licensee's facility and control without the required information), the finding is WHITE. If the carrier misplaces or loses the information (beyond the licensee's control), the finding is GREEN.

For Block N3 (49 CFR 172.604 non-compliance), if during an actual emergency the licensee does not respond in a timely manner in accordance with the requirements (or had not provided the 24-hour telephone number), the finding is WHITE.

For Block N4 (10 CFR 20. 1906), if the licensee's receipt surveys show 1) the package's external radiation levels in excess of five times the Part 71 limits, or 2) the surface radioactive contamination level in excess of five times the Part 71 (49 CFR 173) limits, and the licensee facility fails to make an immediate report, then the finding is WHITE. Other non-compliances are GREEN.

F. Certificates of Compliance

Pursuant to 10 CFR 71.3, a licensee may not deliver or transport licensed material without a general or specific license. The general license for the use of an NRC-approved package is discussed in 10 CFR 71.12. Section 71.12 grants a general license to a licensee to transport or deliver to a carrier for transport, licensed material in a package for which a license, certificate of compliance (CoC), or other approval has been issued by the NRC. Additionally, Section 71.5 requires the licensee to comply with the applicable DOT regulations in 49 CFR.

Usually, the form of approval issued by the NRC is a CoC. For purposes of readability, consider the CoC as discussed here to mean any NRC issued approval for a package.

The CoC approves a specific package design, including a detailed allowable contents description consistent with the use of the general license of Section 71.12. The CoC also lists the requirements or "conditions" for the use and maintenance of the package in block 4 of the CoC. Frequently, these conditions include references to the package's Safety Analysis Report (SAR) or procedures supplied by the CoC holder to the package owner or user. The user of the package must comply with the requirements of 10 CFR Part 71, the applicable regulations of 49 CFR, the CoC and their own transportation program instructions, including quality assurance requirements, to ship material.

G. Discussion

The following discussion provides a step-by-step description of the decision steps which make up the Certificate of Compliance (COC) portion of the Significance Determination Process (SDP) flowchart for Transportation & Part 61. It is anticipated that the inspector will have properly followed the Transportation and Part 61 SDP flowchart through the Radiation Limit Exceeded and Breach of Package decision points to the decision point where this COC branch begins. It is also expected that the inspector follows previous guidance concerning multiple findings on a single incident. That is, a finding with a package breach which resulted in a YELLOW determination and a CoC deficiency which resulted in a GREEN determination, would be considered to be a YELLOW finding. This is because the YELLOW signifies a more serious problem with the package breach aspect of the finding, than the CoC deficiency aspect of the finding.

This branch of the logic diagram resolves an NRC, or licensee, identified finding that deals with package preparation, use and maintenance. It includes a noncompliance with a CoC specification(s) or condition(s) for a transportation package/cask. The following is a list of all the decision blocks contained in the COC SDP flowchart for Transportation & Part 61.

IX. DESIGN DOCUMENTATION DEFICIENCY (1st decision block)

Any documentation deficiency related to maintenance or use of an NRC-approved package. This does not include deliberate misconduct related to documentation. The deficiencies covered here are expected to be purely documentation noncompliances and not the failure to perform a required action. These noncompliances would not be considered safety significant (i.e., GREEN) because the required action was performed and, often, the required documentation can be re-created with appropriate measures to show its creation after the actual performance of the activity.

Examples of documentation deficiencies include, but are not limited to, the failure to properly document compliance with:

- 49 CFR requirements such as shipping papers
- Section 71.87, Routine determinations (failure to document performance of the loading checklist
- Section 71.89, Opening instructions (failing to document providing them when necessary)

- Section 71.91, Records (shipment records and evidence of package quality)
- Section 71.95, Reports
- CoC conditions such as the loading/unloading requirements of Section 7 of the Package SAR or CoC holder supplied procedures (including failure to use latest revision)
- CoC conditions such as the maintenance requirements of Section 8 of the Package SAR or CoC holder supplied procedures (including failure to use latest revision)

It is assumed that a documentation problem will be documented in the licensee's corrective action program and appropriate actions will be taken to correct the problem and preclude repetition in the future. Thus, the finding would be GREEN.

X. MAINTENANCE/USE PERFORMANCE DEFICIENCY (2nd decision block)

This section is intended to cover physical problems with the package or the failure to verify the physical condition of the package. It includes the failure to perform required actions, or the improper performance of required actions. It does not include the physical failure of a package or the results from a physical failure, such as excessive exposures, personnel injury or property damage. These noncompliances would not be considered safety significant because a single occurrence of failure to perform one of these individual actions will not usually result in a significant event. Any consequences of the noncompliance would be considered elsewhere in the SDP (radiation exposure, breach of package, etc.)

Examples of performance deficiencies include, but are not limited to, the failure to properly perform:

- Section 71.87, Routine determinations (failure to perform the loading checklist, verify package is in unimpaired physical condition)
- Section 71.89, Opening instructions (failure to provide then when necessary)
- Package is found to not meet the basic design criteria of the CoC (wall thickness is too thin empty weight is incorrect, package is rusted/corroded beyond tolerances)
- CoC conditions such as the loading/unloading requirements of Section 7 of the Package SAR or CoC holder supplied procedures
- CoC conditions such as the maintenance requirements of Section 8 of the Package SAR or CoC holder supplied procedures as evidenced by the wrong closure bolts, wrong gaskets (no gasket), or weld problems
- Section 71.85, Preliminary determinations or Section 8 of the SAR (failure to verify that the container is in accordance with the CoC)

It is assumed that the discovered problem would also be documented in the corrective action program. The deficiency would be corrected and a root cause evaluation would be conducted to preclude repetition. This finding would be GREEN.

XI. MINOR CONTENTS DEFICIENCY (3rd decision block)

Where the NRC or licensee found that a specification regarding cask contents with minor safety significance included in the CoC was not met (e.g. not a temperature, pressure, geometry, weight, burnup, enrichment, or moderator specification nonconformance), this finding would be considered GREEN. This type of deficiency would have low risk significance relative to causing a radioactive release to the public or public or occupational exposure. If a radiation limit were exceeded or an overexposure resulted due to this deficiency, that finding would be handled through a different SDP branch. This type of deficiency would also be addressed by the licensee's corrective action program.

Examples are:

- minor structural component left out or improperly configured (those not required to maintain content arrangement
- non-load bearing and not shielding related)
- non-fissile material curie content exceeds the specification in the CoC
- a non-fissile isotope other than what is allowed by the CoC is loaded
- residual water in a non-fissile package
- inclusion of non-radioactive material not intended to be in the package

XII. >1 MAJOR CONTENTS DEFICIENCIES (4th decision block)

If it is determined that the package contained material such that a critical parameter was outside of the limits of the CoC, or that the closure/containment system was deficient, then the significance would be determined here. Deficiencies such as these would be risk significant in that they are more likely to lead to a criticality event, a breach of package, a radioactive release, the failure to exercise adequate controls, or a public or occupational dose exceeding NRC limits. If one critical deficiency was identified by the NRC or licensee, then the finding would be WHITE. If more than one critical deficiency was identified, then the finding would be YELLOW.

Examples are:

- temperature
- pressure
- geometry/configuration
- weight
- burnup
- enrichment

- moderator presence when not allowed/moderator exclusion when required
- neutron absorber not present when required
- fissile material curie content or quantity exceeds the specification in the CoC
- major structural item left out (internal brace, basket, shoring, foam, shielding etc.) or structural deficiency/failure.

END

PUBLIC RADIATION SAFETY

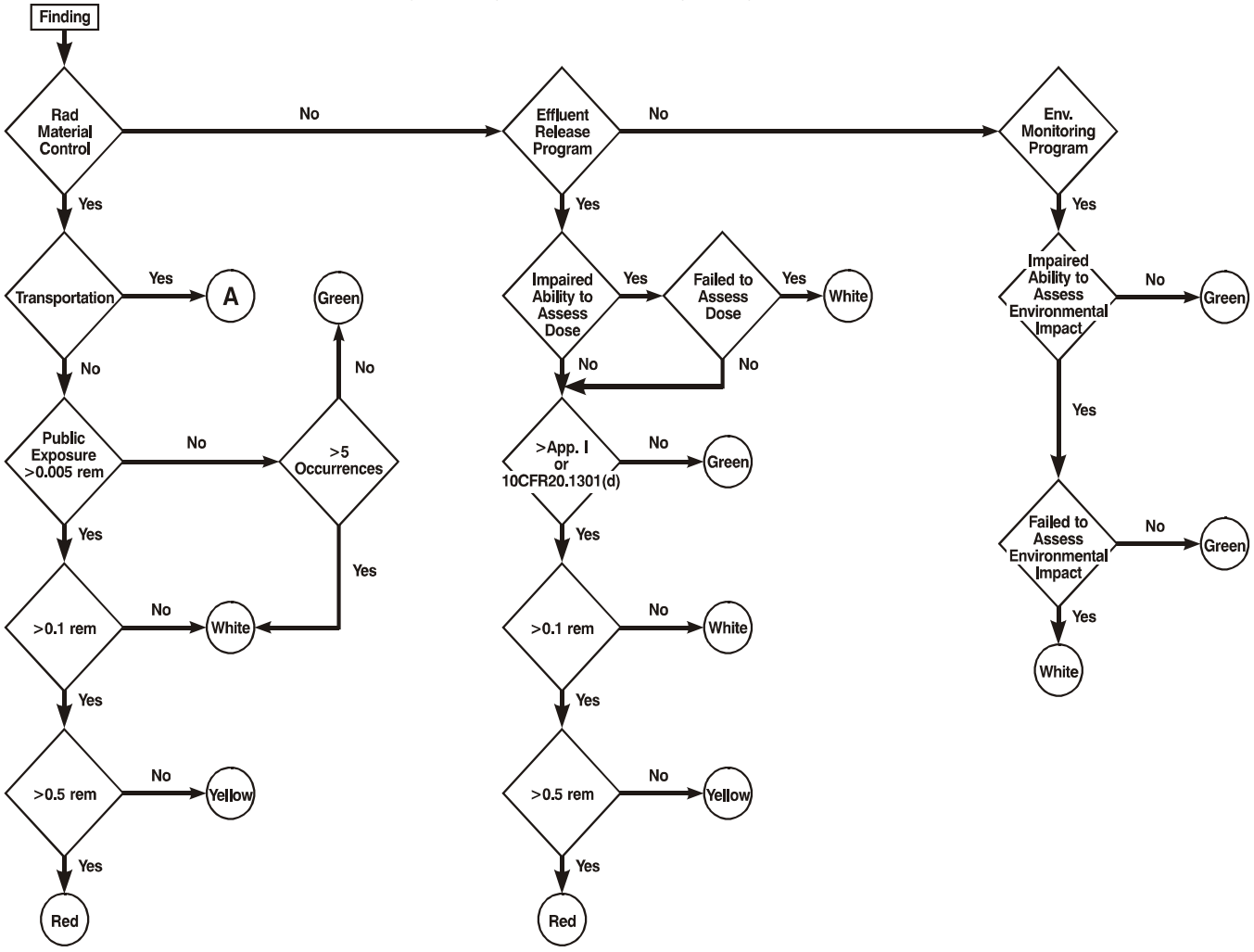

Radiation Limits

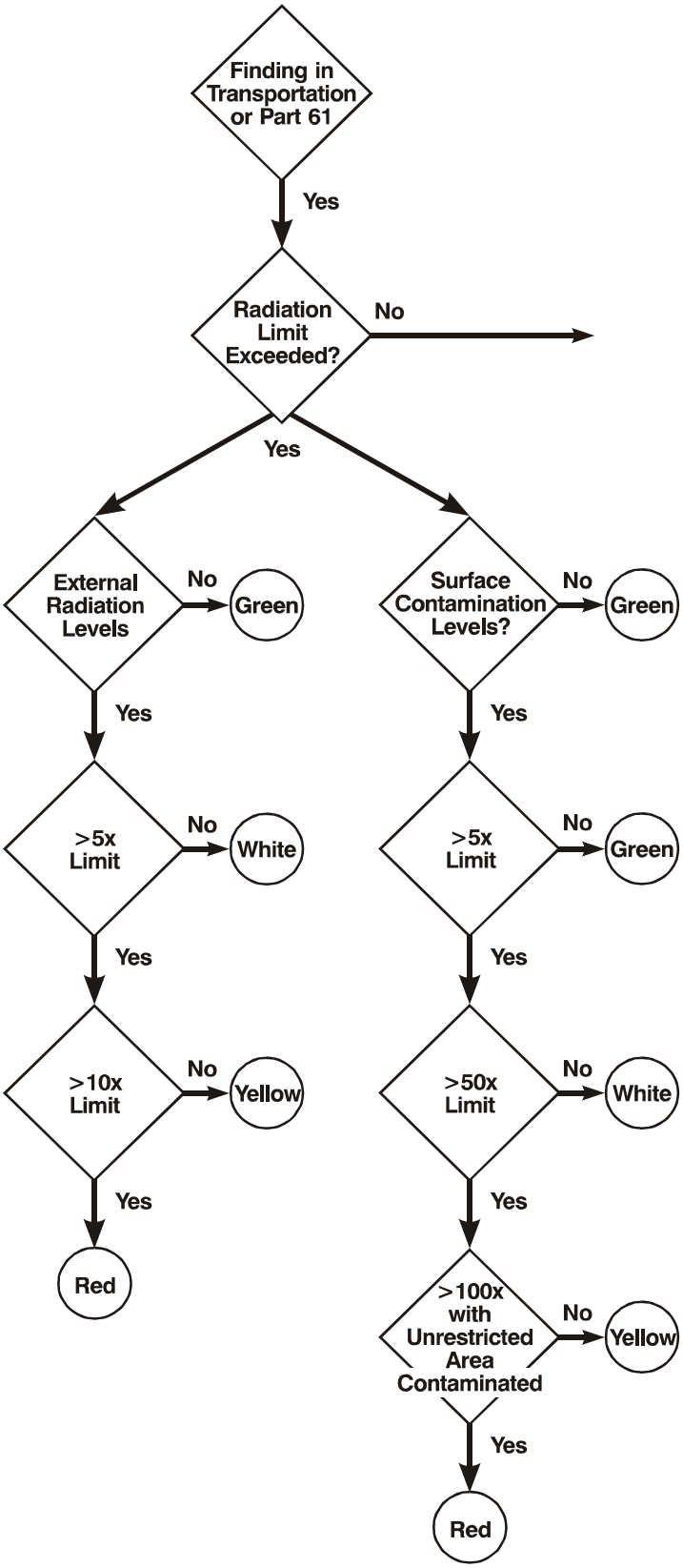

Package Breach

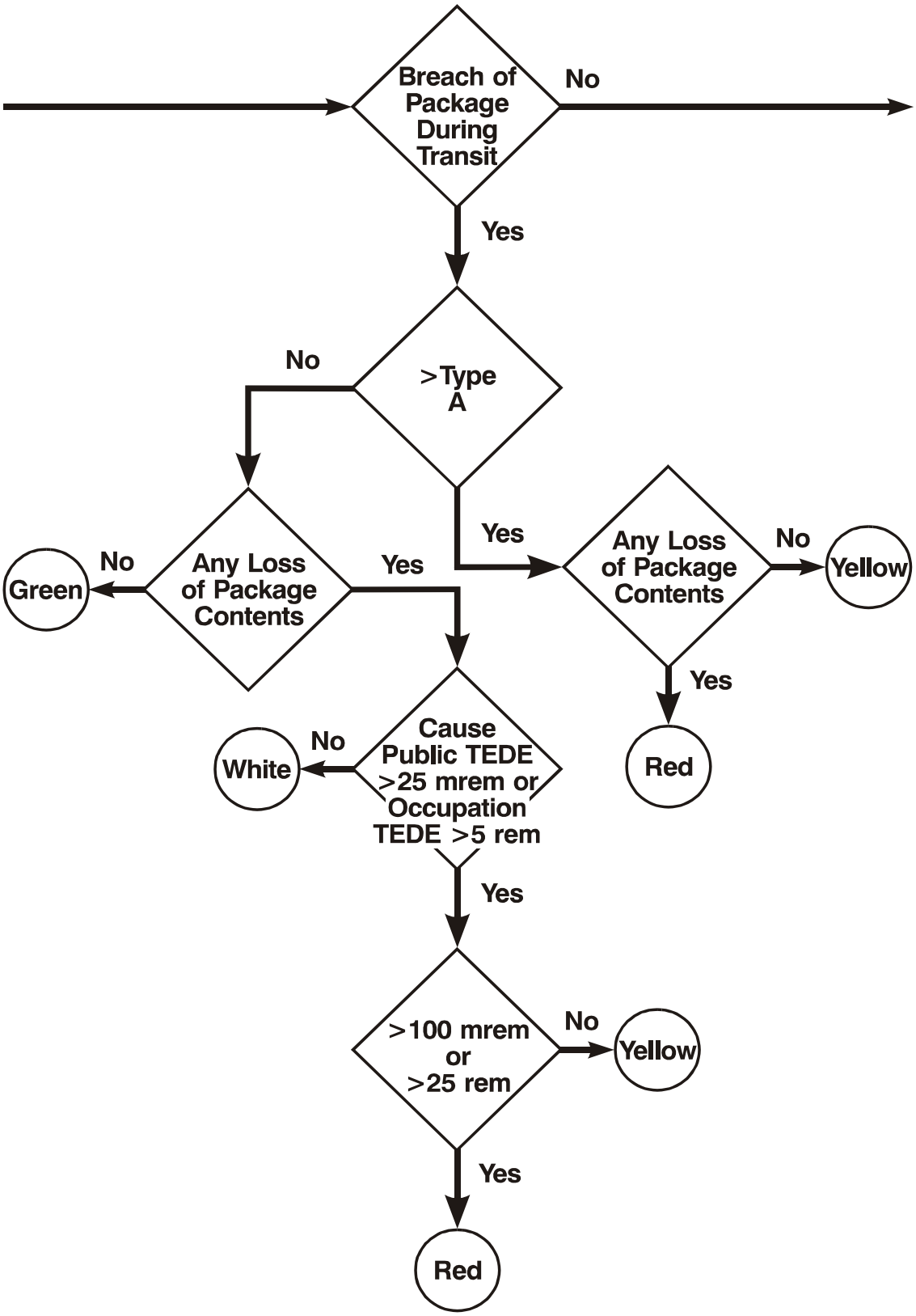

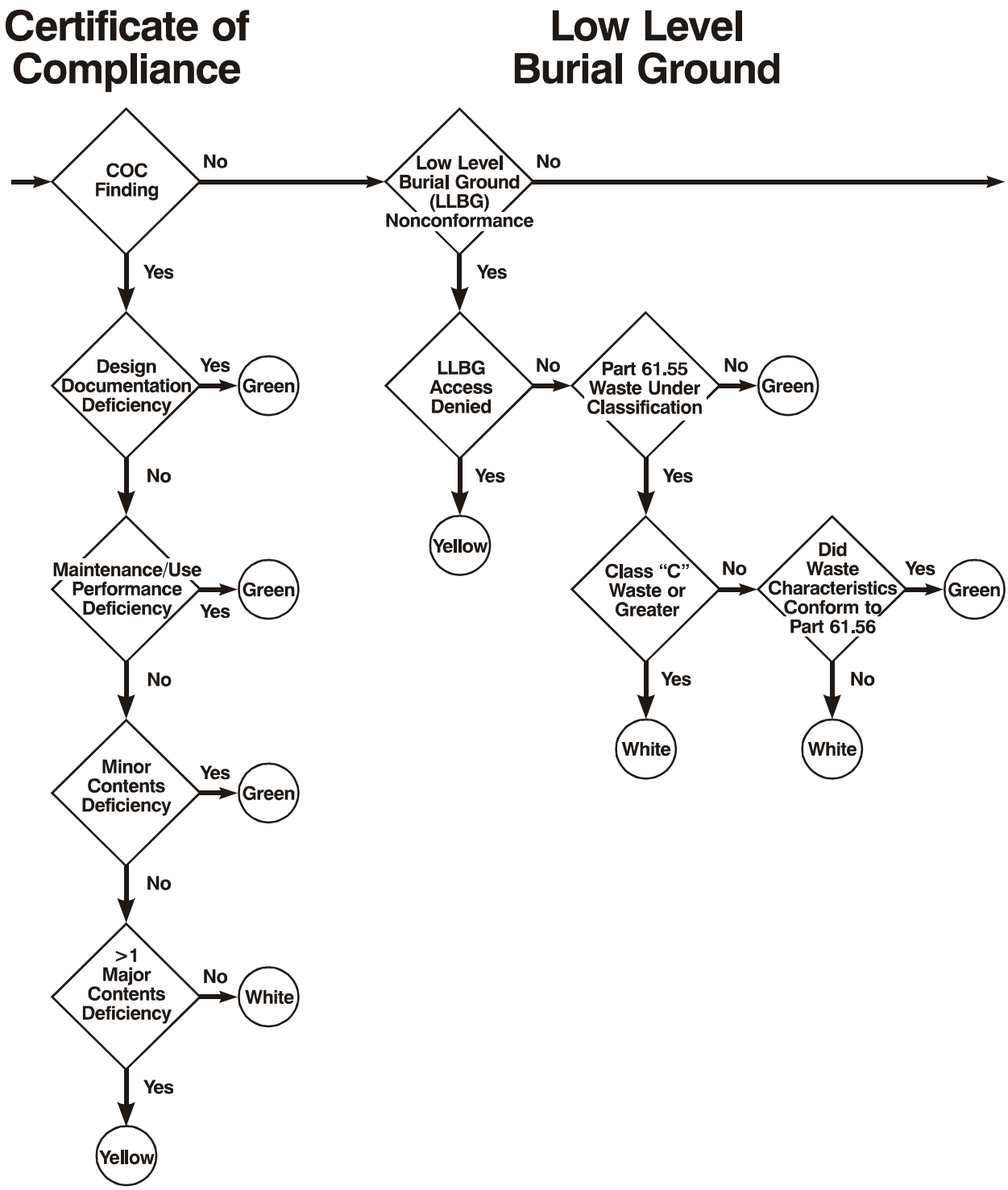
Certificate of Compliance
Low Level Burial Ground
COC Finding
No
Yes
Design Documentation Deficiency
Yes
Green
No
Maintenance/Use Performance Deficiency
Yes
Green
No
Minor Contents Deficiency
Yes
Green
No
>1 Major Contents Deficiency
No
White
Yes
Yellow
Low Level Burial Ground (LLBG) Nonconformance
No
Yes
LLBG Access Denied
No
Yes
Yellow
Part 61.55 Waste Under Classification
No
Green
Yes
Class "C" Waste or Greater
No
Yes
White
Did Waste Characteristics Conform to Part 61.56
Yes
Green
No
White

Notification & Emergency Information

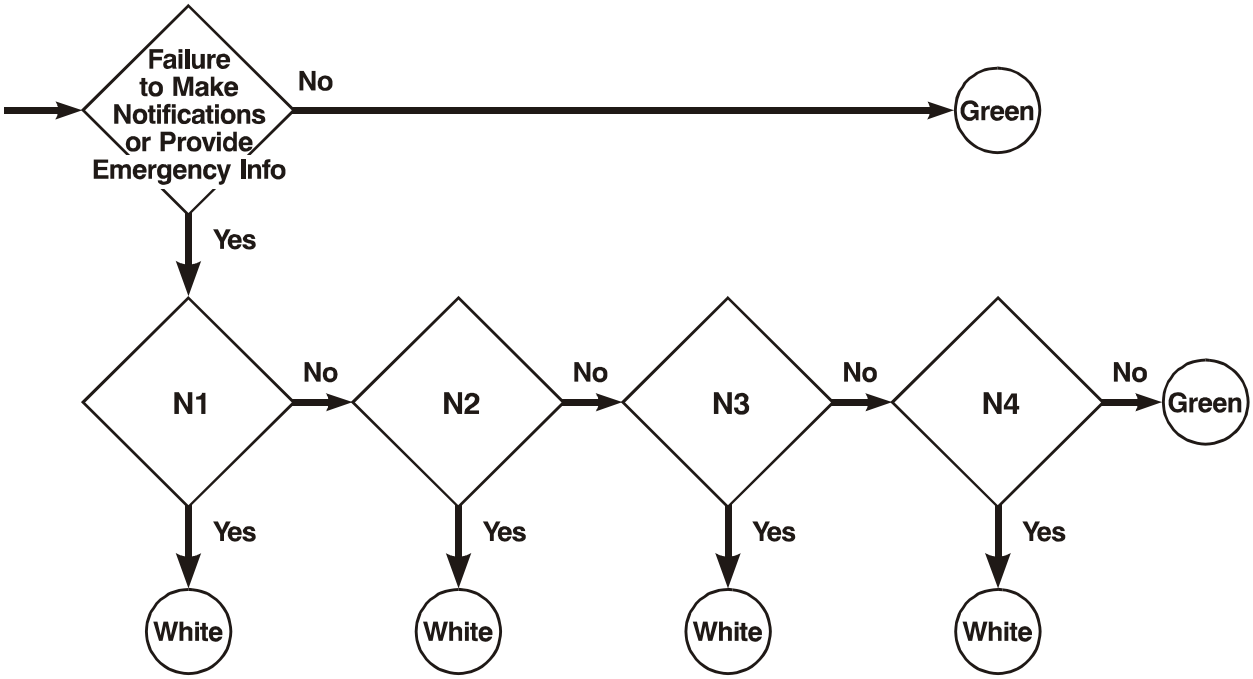

N1 - Failure to comply with 10 CFR 71.97 - Made a shipment w/o notifying state governor prior to shipment entering state

N2 - Failure to provide emergency response info required by 49 CFR 172.602

N3 - Failure to respond during actual request IAW 49 CFR 172.604

N4 - Failure to make notification of 5x limits exceeded as required by 10 CFR 20.1906