NRC FORM 658
(9-1999)

U.S. NUCLEAR REGULATORY COMMISSION

TRANSMITTAL OF MEETING HANDOUT MATERIALS FOR IMMEDIATE PLACEMENT IN THE PUBLIC DOMAIN

This form is to be filled out (typed or hand-printed) by the person who announced the meeting (i.e., the person who issued the meeting notice). The completed form, and the attached copy of meeting handout materials, will be sent to the Document Control Desk on the same day of the meeting; under no circumstances will this be done later than the working day after the meeting.
Do not include proprietary materials.

DATE OF MEETING
03/08/2002

The attached document(s), which was/were handed out in this meeting, is/are to be placed in the public domain as soon as possible. The minutes of the meeting will be issued in the near future. Following are administrative details regarding this meeting:

Docket Number(s)	**50-321 AND 50-366**
Plant/Facility Name	**EDWIN I. HATCH NUCLEAR PLANT, UNITS 1 AND 2**
TAC Number(s) (if available)	**MB2886 AND MB2887**
Reference Meeting Notice	**FEBRUARY 20, 2002**
Purpose of Meeting (copy from meeting notice)	**TO DISCUSS THE 8/31/01 HATCH AMENDMENT REQUEST TO EXTEND COMPLETION TIMES FOR INOPERABLE EMERGENCY DIESEL GENERATORS**

NAME OF PERSON WHO ISSUED MEETING NOTICE	TITLE
L. N. OLSHAN	**PROJECT MANAGER**

OFFICE
NRR

DIVISION
DLPM

BRANCH
PD II-1

Distribution of this form and attachments:
Docket File/Central File
PUBLIC

DF01

Diesel Generator
Technical Specifications Change

Edwin I. Hatch Nuclear Plant
March 8, 2002

SOUTHERN COMPANY

Energy to Serve Your World™

SOUTHERN COMPANY
Energy to Serve Your World™

Agenda

Topic	Presenter	Page
Summary of Submittal	Ozzie Vidal	3
Hatch Implementation of the Maintenance Rule	Keith Fry	11
Diesel Generator Information	Randy Bunt	18
Management of Risk at Plant Hatch	Jim Anderson	21
Quantifiable Risk Impact	Ed Ingram	28
Specific Questions	All	

Diesel Generator Technical Specifications Change

SOUTHERN COMPANY
Energy to Serve Your World™

◆ Description and Reason for Submittal

- Change DG AOT from 3 to 14 days for committed DGs and from 7 to 14 days for the swing DG
- Allow increased flexibility in the scheduling and performance of DG preventive maintenance, including allowing overhauls to be performed on-line
- Avert unplanned plant shutdowns and minimize the potential need for emergency TS change requests
- Increase equipment reliability and safety

Diesel Generator Technical Specifications Change

SOUTHERN COMPANY
Energy to Serve Your World™

- **Brief Overview of the Submittal**
  - Submittal based on probabilistic and deterministic evaluations
  - Deterministic evaluation consists of three main elements
    - Availability of the normal and alternate offsite power sources
    - Verification of operability of other DGs and offsite power sources
    - Reliance on site risk management process while DG is in extended AOT
  - Probabilistic evaluation based on three-tiered approach described in RG 1.177

Diesel Generator Technical Specifications Change

SOUTHERN COMPANY
Energy to Serve Your World™

- **Brief Overview of the Submittal (Cont)**
  - Defense-in-Depth (Deterministic) (E1-4 to E1-7)
    - Class 1E AC distribution system
      - » Two redundant offsite sources via SUT 1(2)C and SUT 1(2)D, with auto transfer
      - » Standby source for each 1E, 1G, 2E and 2G bus. One standby source for the 1F and 2F emergency bus
      - » Loss of any one DG will not prevent safe unit shutdown

Diesel Generator
Technical Specifications Change

SOUTHERN COMPANY
Energy to Serve Your World™

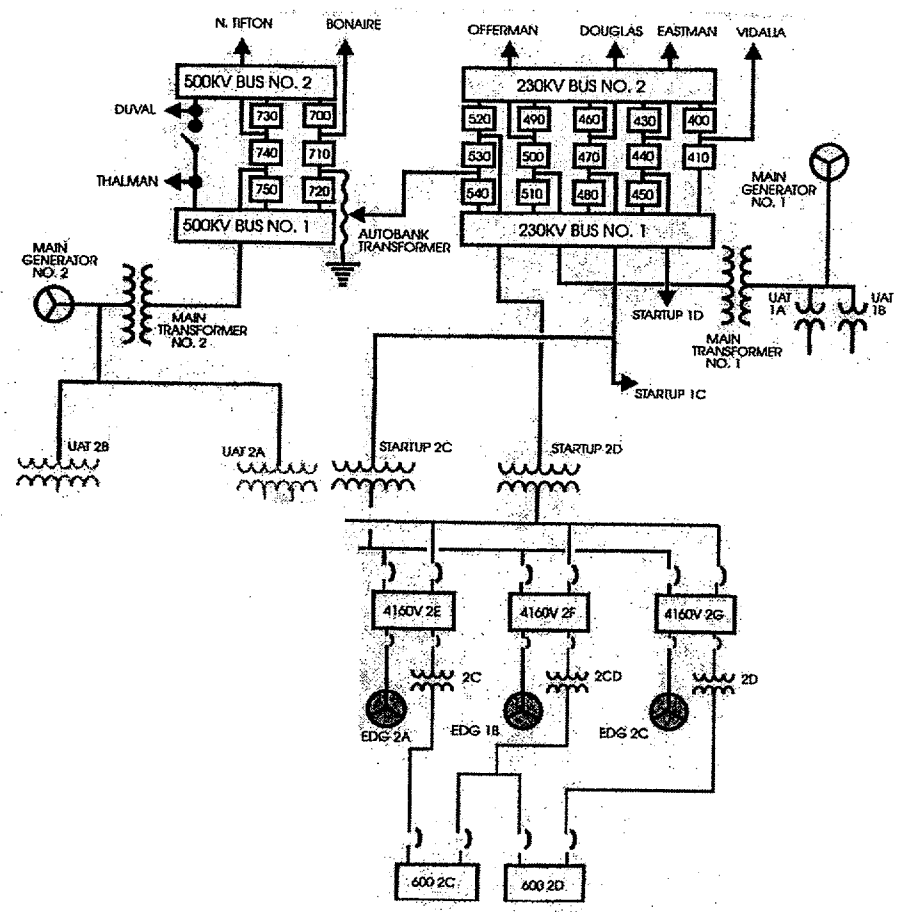

Diesel Generator Technical Specifications Change

SOUTHERN COMPANY
Energy to Serve Your World™

◆ Brief Overview of the Submittal (Cont)

- Risk Impact
  - Evaluation performed using RG 1.174 and RG 1.177
  - Based on the three tier approach described in RG 1.177
    1. PSA capabilities and insights
    2. Avoidance of risk significant plant configurations

       "...risk significant plant equipment outage configuration will not occur when specific plant equipment is out of service consistent with the proposed TS change."
    3. Risk-informed configuration risk management

Diesel Generator Technical Specifications Change

SOUTHERN COMPANY
Energy to Serve Your World™

- **Brief Overview of the Submittal (Cont)**
  - Risk Impact (Cont)
    - Tier 1 and Tier 2
      - » Tier 1 evaluations performed per the guidance of RG 1.174 and 1.177 (E1-9 through E1-26)
      - » Risk management process will ensure no intentional high-risk configurations exist during DG extended outage (E1-27)
        - > Page E1-29 of submittal details our commitments to ensure no high-risk configurations. (No switchyard work, DG 1B alignment, no risk significant activities, alignment of power supplies)
        - > Existing Tech Specs will also aid in the prevention of high risk configurations

Diesel Generator Technical Specifications Change

SOUTHERN COMPANY
Energy to Serve Your World™

- **Brief Overview of the Submittal (Cont)**
  - Risk Impact (Cont)
    - Tier 3 (E1-27 to E1-30)
      - » Plant Hatch risk management process contained in 90AC-OAM-002-0s, "Scheduling Maintenance"
      - » Hatch risk management process includes the four key elements listed in RG 1.177 and is based on 10 CFR 50.65(a)(4)

SOUTHERN COMPANY
Energy to Serve Your World™

◆ Brief Overview of the Submittal (Cont)

- Submittal meets the intent of RG 1.174 and 1.177

SOUTHERN COMPANY
Energy to Serve Your World™

◆ RG 1.177 CRMP and Plant Hatch RMP

- Background
  - RG 1.177 (August 1998) Configuration Risk Management Program elements are included in subsection 2.3.7.1 and 2.3.7.2
  - NRC amended 10 CFR 50.65, The Maintenance Rule, on July 19, 1999, to include the requirements of (a)(4)

◆ RG 1.177 CRMP and Plant Hatch RMP (Cont)

- Background (Cont)
  - Federal register dated July 19, 1999, paragraph II-5 states in part:

    "In NRC staff requirements memorandum dated June 29, 1998, for SECY-98-067, the Commission directed NRC staff to take actions to ensure that CRMP regulatory guidance conforms to the provisions of the final maintenance rule."

SOUTHERN COMPANY
Energy to Serve Your World™

◆ RG 1.177 CRMP and Plant Hatch RMP (Cont)

- Background Conclusion
  - Plant Hatch Risk Management Process complies with 10 CFR 50.65 (a)(4)
  - Plant Hatch Risk Management Process was developed in accordance with NUMARC 93-01 Section 11, which was endorsed by RG 1.182
  - Plant Hatch Risk Management Process is described in 90AC-OAM-002-0S

◆ RG 1.177 CRMP and Plant Hatch RMP (Cont)

- Summary Comparison
  - Scope of SSCs in Plant Hatch Risk Management Process is in accordance with NUMARC 93-01 Section 11.1 [(a)(4) scope]. RG 1.177 states (a)(3) scope
  - The Plant Hatch Risk Management Process is a blended approach of both quantitative and qualitative risk assessments

SOUTHERN COMPANY
Energy to Serve Your World™

◆ RG 1.177 CRMP and Plant Hatch RMP (Cont)

- Summary Comparison (Cont)
  - The Plant Hatch Risk Management Process assesses risk for the following plant configurations:
    - » Pre-planned maintenance
    - » Unplanned maintenance
    - » Emergent maintenance

SOUTHERN COMPANY
Energy to Serve Your World™

◆ RG 1.177 CRMP and Plant Hatch RMP (Cont)

- Summary Comparison (Cont)
  - The Plant Hatch Risk Management Process includes controls for risk assessment procedures and software for compliance and timely revision for permanent plant configuration changes

SOUTHERN COMPANY
Energy to Serve Your World™

◆ RG 1.177 CRMP and Plant Hatch RMP (Cont)

- Overall Comparison Conclusion
  - The Plant Hatch Risk Management Process meets the intent of RG 1.177 CRMP elements by compliance with 10 CFR 50.65 (a)(4) and NRC endorsed industry guidance NUMARC 93-01
  - Plant Hatch Risk Management Process is adequate and does not need a specific CRMP per RG 1.177

Diesel Generator Technical Specifications Change

SOUTHERN COMPANY
Energy to Serve Your World™

- **Every Refueling Cycle DG Maintenance (duration of 3.5 to 4 days)**
  - Engine internal component inspections
    - Bearings, rings, turbos, blowers
  - Remove and test injectors
  - Hydro water/coolant portion of machine
  - Replace filters in fuel/lube oil/coolant systems
  - Generator inspections
  - 24 Hour endurance runs and logic testing

Diesel Generator Technical Specifications Change

SOUTHERN COMPANY
Energy to Serve Your World™

- **Reoccurring DG Maintenance (duration of 4.5 to 10.5 days)**
  - Every 3 refueling cycle inspections
    - Dampers, air start distributor, fluid draining, generator
  - Every 5 refueling cycle change outs
    - Governor
  - Every 6 to 7 refueling cycle change outs
    - Engine internal component replacement (liners, pistons, rings)

Diesel Generator Technical Specifications Change

SOUTHERN COMPANY
Energy to Serve Your World™

◆ DG Maintenance Summary

- Work schedules per the Hatch Risk Management Process using approximately half the allowed LCO time
  - Once per cycle inspections take 3-4 days
  - Once every 6 to 7 cycles component replacements take 5-10 days
  - With 5 DGs, a 5 to 10 day work window will occur approximately every other year

SOUTHERN COMPANY
Energy to Serve Your World™

◆ Plant Hatch Risk Management

- Key components of program are listed in 90AC-OAM-002-OS "Scheduling Maintenance"
- The details of Work Management contained in AG-OAM-02
  - Multi-week process based on a 12 week baseline
  - Detailed review starts 3 weeks prior to implementation
  - This review includes the impact to Technical Specifications, FHA, ODCM and Risk
  - Using our online risk monitor EOOS, we start by assuming equipment out concurrently, if this results in a higher level risk we try to schedule consecutively

Diesel Generator Technical Specifications Change

SOUTHERN COMPANY
Energy to Serve Your World™

- **Plant Hatch Risk Management (Cont)**
  - System Outages for DGs, RHR, HPCI, etc.
    - Dates for the outages selected several weeks to several months ahead
    - This provides time for planning, ensure parts available, allows Engineering time to evaluate the proposed OOS time with the Maintenance Rule performance criteria, allows us to run EOOS calculations and move other activities out of the system outage window

Diesel Generator
Technical Specifications Change

SOUTHERN COMPANY
Energy to Serve Your World™

◆ Plant Hatch Risk Management (Cont)

Example 1

1A DG out-of-service
TS - 72 hr. RAS
EOOS - CDF 2.0 (Green), LERF 6.0 (Yellow)

- With the 1A DG OOS, Maintenance requests we take out the 1A RHR pump to change oil. Considering TS, it is a 7 day RAS. Running EOOS - CDF 4.22 (Green), LERF 8.2 (Yellow)

◆ Plant Hatch Risk Management (Cont)

Example 2

- With the 1A DG OOS, Team 2 requests to perform a high trip potential surveillance. No TS concerns. Running EOOS-CDF 3.36 (Green), LERF 12.0 (Yellow)

Example 3

- High trip potential surveillance due (cannot extend date) and the 1A DG becomes INOP. EOOS the same CDF 3.36 (Green), LERF 12.0 (Yellow)

◆ Plant Hatch Risk Management Process (Cont)

Example 3 (Cont)

- In the first and second cases the activities would have been known and discussed in several planning meetings. They would have been scheduled to avoid being performed with the DG OOS. The same planning occurs regardless if the DG RAS time is 72 hrs. or 14 days
- When the third unplanned maintenance on the DG occurs, we would evaluate the risk and try to reschedule, if possible

Diesel Generator
Technical Specifications Change

SOUTHERN COMPANY
Energy to Serve Your World™

◆ Plant Hatch Risk Management Process (Cont)

Example 4

- 1B Core Spray pump tagged out for PM TS 7 day RAS EOOS CDF .94 (Green) LERF .77 (Green)
- 1A DG becomes INOP ~~7~~ 3 day RAS on DG new EOOS values CDF 5.3 (Green) LERF 6.0 (Yellow). The unit is in TS 3.0.3 (7 hrs. to mode 2) (both CS INOP)
- We quickly determine if either the CS or the DG can be returned to operable status or begin plant shutdown

- **Plant Hatch Risk Management Process (Cont)**

  Emergent work activities which result in medium to high risk involve:

  - Actions to provide increased risk awareness
  - Actions to reduce the duration of the activity
  - Actions to minimize risk
  - Approval of Plant Management

RESULTS: For (14) Fourteen Day AOT

Regulatory Guide 1.174 Comparison	
Reg Guide 1.174 Guidance	**Actual Value for AOT**
ΔCDF = 1.0E-06	**ΔCDF = 3.0E-07**
ΔLERF = 1.0E-07	**ΔLERF = 1.79E-07**

Regulatory Guide 1.177 Comparison	
Reg Guide 1.177 Guidance	**Actual Value for AOT**
ICCDP = 5.0E-07	**ICCDP (A Diesel) < 1.0E-08**
	ICCDP (B Diesel) = 4.18E-08
	ICCDP (C Diesel) = 1.208E-07
ICLERP = 5.0E-08	**ICLERP (A Diesel) = 8.967E-08**
	ICLERP (B Diesel) = 9.27E-08
	ICLERP (C Diesel) = 1.15E-07

Diesel Generator Technical Specifications Change

SOUTHERN COMPANY
Energy to Serve Your World™

- **Major Contribution to Large Early Release Frequency (LERF)**
  - The Loss of Site Power (LOSP) cases make the largest contribution to the Hatch PSA LERF model
  - The Hatch LOSP Initiating Event Frequency uses industry data which is accepted PSA methodology
  - The Hatch LOSP frequency is driven by data from plants prone to severe east coast weather
  - These data fail to account for extreme robust character of the Hatch high-voltage switchyard
  - Research for this submittal did not find any documented LOSP events where power was lost to the emergency buses

Diesel Generator Technical Specifications Change

SOUTHERN COMPANY
Energy to Serve Your World™

◆ Model Conservatism

DC Power

- Presently the Hatch PSA uses approximately two (2) hours of station service battery support without charger capability
- This is based on existing margin calculations for safety analysis
- Attempts to reduce this conservatism have revealed that under station blackout conditions four (4) hours of battery power can be made available
- The battery power consideration affects the electrical power recovery, portions of the PSA and in turn can reduce the LERF contribution

Diesel Generator Technical Specifications Change

SOUTHERN COMPANY
Energy to Serve Your World™

◆ Conclusion

- The regulatory guidance depicts negligible change in risk. For the BWR 4 with a Mark I containment this is very small in magnitude
- The Hatch PSA is based on engineering calculations, follows Technical Specifications and plant procedures, and is extremely detailed to comprehensively model equipment failure. It is an acceptable and conservative model with which to evaluate the proposed diesel AOT
- There has been no unusual or unique risk circumstances uncovered by the PSA for this application
- The increases above negligible risk guidance calculated with the Hatch model are due to calculation based conservatisms

Concerning the March 8, 2002 Meeting with Hatch on the LAR for a Permanent TS modification to extent CTs for LCO 3.8.1

The licensee will be expected to discuss of the following issues, and present quantitative and qualitative analyses where specifically requested:

1) The maximum risk associated with failure to meet the LCO (Condition A) would occur in connection with the CT of 17 days for Required Action A.3. According to the TS, at any time during the (14 day) maintenance interval to restore an inoperable EDG, one required offsite circuit may be declared inoperable for up to 3 days. Even though the change was made for consistency, increasing the EDG CT from 3 days to 14 days increases considerably the likelihood of concurring events. For this reason, Hatch is requested to estimate the maximum EOOS risk associated with the 2nd A.3 CT (i.e., that for a 14 day EDG CT with concurring 3 day offsite circuit CT) for restoration of required AC sources to OPERABLE status.

   This is the "third" request for this information.

2) It is noted that every time an LCO is entered taking an EDG in either unit out of service to perform maintenance, by procedure, the B EDG is out of service for the other unit, hence, a single LCO entry adversely affects the risk to both units approximately to the same degree. For this reason, Hatch is requested to estimate and discuss the factors responsible for, i.e., contributing to, the calculated ICLERP(EOOS-EDG).

3) In order for a program developed for - and used to - support the maintenance rule to also be an adequate substitute for a CRMP it must specifically include the attributes discussed in Regulatory Guide 1.177. Discuss how the Hatch program incorporates and implements these characteristics in managing risk, i.e., how risk management is proceduralized for TS application. Discuss the Hatch EOOS color code in terms of quantitative measures of risk.

4) With regard to what we have been referring to as a "corrective maintenance" concern, but should be calling an "overlapping outages" issue, CRMPs provide only part of the solution. In order to be confident that the risk is managable, the likely risk change associated with an AOT change needs to be anticipated by analysis of the proposed AOT in terms of outages of other risk significant equipment. This has become important due the increase in the frequency and length of preventative maintenance outages. The only way to anticipate these risk changes is to analyze recent risk history, e.g., by evaluating the risk profile for the previous cycle. Hence, for the highest risk unit, Hatch is requested to present and discuss the EOOS risk profile for the last or current cycle and estimates of the maximum, minimum, and mean risks associated with having the EDG out of service during the cycle for the proposed AOT.

1) We cannot operate with a diesel generator out of service concurrently with an offsite circuit.

If a diesel generator and an offsite circuit are inoperable concurrently, Technical Specification (TS) 3.8.1.E states that one or the other must be returned to service within 12 hours. If not, the unit is brought to hot shutdown within the next 12 hours. Thus the TS effectively prohibits operation in this mode.

The below example attempts to explain TS 3.8.1 A3 and B4:

Specifications A.3 and B.4 are meant to prevent abuse of the TS limiting condition for operation.

For example,
Suppose the 1C diesel generator becomes inoperative. Call this Day 1. On Day 2, of the diesel outage, SUT 1C goes out of service. Two hours later, the 1C diesel returns to service.

For the two hour period that DG 1C and SUT 1C were concurrently inoperative, TS RAS 3.8.1.E *(no concurrrent operation of diesel and offsite circuit)* was in effect. When the DG was returned operable, however, RAS 3.8.1.E was no longer in effect. At this point, 3.8.1.A is in effect for the inop offsite circuit (SUT 1C).

Note that LCO 3.8.1 is still being met by reliance on a Required Action Statement (RAS), since SUT 1C is still out of service. On Day 1, the 1C DG was inop and at the end of day 2, SUT 1C is inop. Thus, LCO 3.8.1 is still being met by reliance on an RAS.

Now, assume that on Day 5, with SUT 1C still inop, DG 1B goes out of service. Two hours later, SUT 1C is returned to service. Again, TS 3.8.1.E was in effect for the two hour period that DG 1B and SUT 1C were out of service concurrently. LCO 3.8.1 is still being met by reliance on an RAS; in fact the LCO has been relying on an RAS for 5 consecutive days. With diesel 1B out of service, 3.8.1.B is in effect.

Note that the TS RAS for the 1B diesel allows a 7 day out of service time.

Now, assume that on Day 10, the 1B diesel is still out of service. Even though the diesel itself has been out of service for only 5 days and the TS allows 7 days, TS 3.8.H must be entered at the end of Day 10 and the unit placed in mode 3 (hot shutdown) within 12 hours. *This is because LCO 3.8.1 has been relying on an RAS for greater than 10 days, which is the maximum time allowed by 3.8.1.B.4.*

Summarizing, the purpose of specification 3.8.1 A3 and 3.8.1 B4 is to prevent a continuous reliance on an RAS for fulfillment of LCO 3.8.1 a,b and c , which theoretically could go on indefinitely if this provision did not exist.

The spec does not allow a concurrent diesel and offsite circuit outage. Neither does it allow an individual component to be out of service any longer than its respective completion time.

Question 2

Conservative estimates based on engineering judgement for ICLERP for the C diesel generator is approximately 8.8 E-08 as opposed to the 1.15 E-07 originally submitted. The new estimate is based on extending the Station Service battery operation for RCIC to approximately 4 hours. This will extend the time to core uncovery, core damage and/or subsequent vessel failure.

The estimate does not account for the use of the diesel driven fire pumps for injection which have their own self contained power system. In addition, the capability to tie, under certain circumstances, an operable diesel generator to more than one emergency 4KV Bus is not accounted for.

The LOSP model for the Hatch PSA is also conservative in that it considers only one half of the High Voltage switchyard as the offsite power source. The actual switchyard is composed of 8 incoming lines. Four of these are 230KV which comprise the offsite source considered in the PSA. The other four lines are 500KV and are connected to the 230KV side via an autotransformer used for synchronizing the two transmission systems. During the LOSP condition, the 500KV source can be considered in affect an extra offsite power source. This was not accounted for in the PSA model, nor in the above estimate.

These items alone could very well reduce ICLERP to very close to the Regulatory Guide 1.177 limits for negligible risk.

3/4/02

RESPONSE TO NRC REVIEWER'S QUESTIONS CONCERNING RG 1.177

This document is to support the following request;

Plant Hatch's LAR for a Permanent TS modification to extent CTs for LCO 3.8.1

NRC Reviewer's Question:

3) In order for a program developed for - and used to - support the maintenance rule to also be an adequate substitute for a CRMP it must specifically include the attributes discussed in Regulatory Guide 1.177. Discuss how the Hatch program incorporates and implements these characteristics in managing risk, i.e., how risk management is procedurelized for TS application. Discuss the Hatch EOOS color code in terms of quantitative measures of risk.

Hatch Response:

General supporting information:

Point 1: Plant Hatch compliance to 10 CFR 50.65 (a)(4).
Point 2: Clarification of a Configuration Risk Management Program (CRMP) versus a Risk Management Process in accordance with 10 CFR 50.65 (a)(4).

Supporting Regulatory Information:

1. Federal Register: June 1, 2000 Volume 65, Number 106, Page 34913 states in part the following:
   "The Nuclear Regulatory Commission amended its maintenance rule, 10 CFR 50.65, ``Requirements for monitoring the effectiveness of maintenance at nuclear power plants," on July 19, 1999 (64 FR 38551). This amendment requires nuclear power plant licensees to assess and manage the increase in risk that may result from proposed maintenance activities. The implementation date of this amendment was made dependent upon guidance being issued to nuclear power plant licensees on assessing and managing increases in risk associated with maintenance activities. Rather than issue Revision 3 to Regulatory Guide 1.160, ``Monitoring the Effectiveness of Maintenance at Nuclear Power Plants," the NRC staff decided to issue Regulatory Guide 1.182, ``Assessing and Managing Risk Before Maintenance Activities at Nuclear Power Plants," as guidance to nuclear power plant licensees on assessing and managing risk before maintenance activities are conducted at the nuclear power plant. Regulatory Guide 1.182 is being issued as a companion guide to Regulatory Guide 1.160, which provides guidance on the structure of the licensees' maintenance effectiveness monitoring programs. Regulatory Guide 1.160 endorses a document prepared by the Nuclear Energy Institute (formerly NUMARC), NUMARC 93-01, ``Industry Guideline for Monitoring the Effectiveness of Maintenance at Nuclear Power Plants." ***Regulatory Guide 1.182 endorses a revised Section 11, "Assessment of Risk Resulting from Performance of Maintenance Activities," of NUMARC 93-01. Regulatory Guide 1.182 was published for public comment (64 FR 70098, December 15, 1999) as DG-1082, "Assessing and Managing Risk Before Maintenance Activities at***

Nuclear Power Plants." There were no public comments on the draft guide, and NEI addressed the comments on Section 11 of NUMARC 93-01 with minor revisions, and the NRC staff concurs in these revisions. Therefore, the effective date of the July 19, 1999, amendment to 10 CFR 50.65 is November 28, 2000."

2. Federal Register: July 19, 1999 Volume 64, Number 137, Page 38553 states in part the following:

   "5. Regulatory Controls Overlapping Technical Specifications

   Comment. Several commentors stated that there is a need to reconcile the overlapping regulatory regimes of the maintenance rule, technical specifications (TS), and the configuration risk management program (CRMP) (described in Regulatory Guide 1.177, ''An Approach for Plant-Specific, Risk-Informed Decisionmaking: Technical Specifications''). NEI and the utilities were mainly concerned with the overlap of regulatory controls in the revised rule and TS.

   Response. The NRC agrees that some overlap exists among these regulatory controls. Under certain conditions, a plant's TS may allow an SSC to be out of service, while a pre-maintenance assessment proposing the removal of that same SSC from service may indicate a need to take other actions to preclude that configuration. It is possible that allowed outage times of TS may not be in complete agreement with reasonable out-of-service times resulting from the required assessments. However, TS limiting conditions for operation were, in part, developed to address random single failures of plant SSCs; they were not intended to be used by licensees as rationale for removing multiple SSCs from service to perform on-line maintenance. In general, TS may serve as a pre-analyzed assessment, when used with sound judgement, when a licensee proposes to remove a single SSC from service for maintenance, the licensee will remain in conformance with its TS.

   In NRC staff requirements memorandum dated June 29, 1998, for SECY–98–067, the Commission directed the NRC staff to take actions to ensure that CRMP regulatory guidance conforms to the provisions of the final maintenance rule. After revisions to the maintenance rule are completed, the NRC will expeditiously support licensee requests to remove the CRMP requirements from plant TS."

Plant Hatch Conclusion based on general supporting information:

1. **The Plant Hatch Risk Management Process is proceduralized in Administrative Control Procedure 90AC-0AM-002-0S, Scheduling Maintenance. This procedure was developed using the guidance in NUMARC 93-01, Section 11, Assessment of Risk Resulting From Performance of Maintenance Activities. Section 11 of the NUMARC document was endorsed by NRC RG 1.182.**
2. **Per NRC staff memorandum dated June 29, 1998, for SECY–98–067,*" the Commission directed the NRC staff to take actions to ensure that CRMP regulatory guidance conforms to the provisions of the final maintenance rule*."**

3/4/02

RESPONSE TO NRC REVIEWER'S QUESTIONS CONCERNING RG 1.177

Plant Hatch's Risk Management Process complies with the guidance in NUMARC 93-01, Section 11, Assessment of Risk Resulting From Performance of Maintenance Activities. Section 11 of the NUMARC document was endorsed by NRC RG 1.182. Plant Hatch's Risk Management Process is based on 10 CFR 50.65 (a)(4). However, both the CRMP described in Reg Guide 1.177 and 10 CFR 50.65 (a)(4) have the same objective, managing risk.

Response to first part of question number 3.

The following responses to elements of a CRMP in RG 1.177 are based on Plant Hatch's compliance to 10 CFR 50.65 (a)(4).

RG 1.177 An Approach for Plant-Specific, Risk-Informed Decisionmaking: Technical Specifications states in part the following:

2.3.7.1 Configuration Risk Management Program (CRMP).

Licensees should describe their capability to perform a contemporaneous assessment of the overall impact on safety of proposed plant configurations prior to performing and during performance of maintenance activities that remove equipment from service. Licensees should explain how these tools or other processes will be used to ensure that risk-significant plant configurations will not be entered and that appropriate actions will be taken when unforeseen events put the plant in a risk-significant configuration.
The TS Administrative Controls section should describe the licensee's program for performing a real-time risk assessment. The bases for TS for which an extended AOT is granted should reference this program description. The following program should be incorporated and should be described in the TS Administrative Controls section.

MODEL CONFIGURATION RISK MANAGEMENT PROGRAM

The Configuration Risk Management Program (CRMP) provides a procedurelized risk-informed assessment to manage the risk associated with equipment inoperability. The program applies to technical specification structures, systems, or components for which a risk-informed allowed outage time has been granted. The program is to include the following.

a. Provisions for the control and implementation of a Level 1 at-power internal events PRA-informed methodology. The assessment is to be capable of evaluating the applicable plant configuration.
   Hatch Response:

   90AC-OAM-002-0S, Subsection 8.2 Maintenance During Power Operation, associated flow chart and instructions, Attachment 2 General Requirement for Risk Assessments and Attachment 3 Equipment Out of Service Assessment, provide station personnel with the methodology for assessing risk for plant configurations during power

operation. This includes the use of an online risk monitor "EOOS", a quantitative tool and qualitative considerations based on NUMARC 93-01 Section 11.

b. Provisions for performing an assessment prior to entering the plant configuration described by the Limiting Conditions for Operation (LCO) Action Statement for preplanned activities.
Hatch Response:

90AC-0AM-002-0S Subsection 8.1.1, under the heading 8.1 General Requirements, in part states the following; "Subsections 8.2, 8.3 AND 8.4 require that a risk-informed safety assessment be performed *prior to removing* these SSC's from service for the purpose of maintenance." Subsection 8.2 and referenced Attachment 2 and 3 provide guidance for at power operation risk assessment of plant configurations prior to planned maintenance.

c. Provisions for performing an assessment after entering the plant configuration described by the LCO Action Statement for unplanned entry into the LCO Action Statement.
Hatch Response:

**First, if a SSCs described in the Technical Specification has an unplanned entry into the LCO Action Statement, appropriate timely actions shall occur to meet our TS requirements. Secondly, 90AC-0AM-002-0S, Subsection 8.2 Maintenance During Power Operation flow chart and instructions, Attachment 2 General Requirement for Risk Assessments and Attachment 3 Equipment Out of Service Assessment, provide station personnel with the methodology for assessing risk for plant configurations during power operation for a change to the plant configuration. 90AC-0AM-002-0S Subsection 8.2 flow chart item number 27 states in part: *"The applicable unit Shift Supervisor will release activities for work per 30AC-OPS-0S section 8.1.2 after confirming that a safety assessment for the configuration has been performed. If necessary, the on-shift staff may perform additional assessments per this procedure.*
*Emergency OR Urgent corrective maintenance required to return failed components to service should not be delayed in order to perform safety assessments, but the start of other normally scheduled work shall be delayed until an assessment is performed. If the urgent work activity is completed and restored before an assessment can be performed, no assessment is required."***

d. Provisions for assessing the need for additional actions after the discovery of additional equipment-out-of-service conditions while in the plant configuration described by the LCO Action Statement.

Hatch Response:

First, if a SSCs described in the Technical Specification has an unplanned entry into the LCO Action Statement, appropriate timely actions shall occur to meet our TS requirements. Secondly, 90AC-0AM-002-0S, Section 8.2 Maintenance During Power Operation flow chart and instructions, Attachment 2 General Requirement for Risk Assessments and Attachment 3 Equipment Out of Service Assessment, provide station personnel with the methodology for assessing risk for plant configurations during power operation. Based on the guidance of Subsection 8.2, and the first block of the flowchart (and associated instructions), *"New or Revised Work Activities Identified" will be assessed."* "New" maintenance activities due to an additional OOS condition of an inscope SSC would require an assessment. If per Subsection 8.2, Attachment 2 General Requirement for Risk Assessments and Attachment 3 Equipment Out of Service, assessment requires additional actions, constraints, or contingencies are required they shall be implemented in accordance with the procedure.

e. Provisions for considering other applicable risk-significant contributors such as Level 2 issues and external events, qualitatively or quantitatively.

Hatch Response:

In accordance with 90AC-0AM-002-0S, the online risk monitor "EOOS" will be used for quantitative assessments. The online risk monitor "EOOS" is based on a level 1 and 2 PSA model. 90AC-0AM-002-0S, Attachment 2 General Requirement for Risk provide station personnel with the methodology for assessing risk for plant configurations during power operation for plant external events consistent with NUMARC 93-01 guidance.

2.3.7.2 Key Components of the CRMP.

The licensee should ensure that the CRMP contains the following key components.

Key Component 1: Implementation of CRMP

The intent of the CRMP is to implement Section a(3) of the Maintenance Rule (10 CFR 50.65) with respect to on-line maintenance for risk-informed TS, with the following additions and clarifications:

1. The scope of structures, systems, and components (SSCs) to be included in the CRMP is all SSCs modeled in the licensee's plant PRA in addition to all SSCs considered high safety significant per Revision 2 of Regulatory Guide 1.160 (Ref. 16) that are not modeled in the PRA.

Hatch Response:

NUMARC 93-01 Section 11.1 states in part that *"The scope of the assessment may be limited to those structures, systems, and components that a risk-informed evaluation*

process has shown to be significant to public health and safety." **Also, NUMARC Section 11.3.3 states in part that *"10 CFR 50.65(a)(4) states "The scope of the Systems, Structures and Components (SSCs) to be addressed by the assessment may be limited to those SSCs that a risk-informed evaluation process has shown to be significant to public health and safety". Thus, the scope of SSCs subject to the (a)(4) assessment provision may not include all SSCs that meet sections (b)(1) and (b)(2) maintenance rule scoping criteria."* Plant Hatch SSCs required to be assessed for risk under the (a)(4) process were limited, per the NUMARC guidance to:**

a) All components contained in the at-power PSA Risk Model
b) Functions classified as 'Risk Significant' by the Expert Panel, not already modeled
c) Functions known from plant or industry experience to significantly affect initiating events.

Items b) and c) necessitated revisions and enhancements to the risk model used in EOOS including the addition of a number of qualitative decision trees to assist in evaluating initiating events and separating a number of "black box" functions into their separate components.

2. The CRMP assessment tool is PRA-informed and may be in the form of a risk matrix, an on-line assessment, or a direct PRA assessment.
   Hatch Response:

   90AC-OAM-002-0S, Section 8.2 Maintenance During Power Operation allows use of an online risk monitor assessment tool "EOOS" or a pre-analyzed risk matrix.

3. The CRMP will be invoked as follows:
   - For pre-planned entrance into the plant configuration described by a TS action statement with a risk-informed AOT, a risk assessment, including, at a minimum, a search for risk-significant configurations, will be performed prior to entering the action statement.
     Hatch Response:

     90AC-0AM-002-0S Subsection 8.1.1, under the heading 8.1 General Requirements, states in part the following; *"Subsections 8.2, 8.3 <u>AND</u> 8.4 require that a risk-informed safety assessment be performed <u>prior to removing</u> these SSC's from service for the purpose of maintenance."* Subsections 8.2 and referenced Attachment 2 and 3 provide guidance for at Power Operation Risk Assessment of Plant configurations prior to planned maintenance. During the maintenance work planning process, configurations that result from scheduling requests from different work groups are evaluated for "potential" risk significant configurations to ensure the risk associated with the proposed work schedule is minimized. When work is released by the operating shift, if it is outside the schedule or configuration already analyzed, the

"actual" plant configuration is evaluated prior to releasing the work. Qualitative considerations for factors that need to be avoided or considered are included in Attachment 2 General Requirement for Risk Assessments and Attachment 3 Equipment Out of Service Assessment.

- For unplanned entrance into the plant configuration described by a TS action statement with a risk-informed AOT, a similar assessment will be performed in a time frame defined by the plant's Corrective Action Program (Criteria XVI of Appendix B to 10 CFR Part 50).

- When in the plant configuration described by a TS action statement with a risk-informed AOT, if additional SSCs become inoperable or nonfunctional, a risk assessment, including, at a minimum, a search for risk-significant configurations, will be performed in a time frame defined by the plant's Corrective Action Program (Criteria XVI of Appendix B to 10 CFR Part 50).

Hatch Response (both bullets above):

First, if a SSCs described in the Technical Specification has an unplanned entry into the LCO Action Statement, appropriate timely actions shall occur to meet our TS requirements. Second, the timeliness of performing a risk assessment is not defined in our Corrective Action Program. 90AC-0AM-002-0S provides station personnel with the methodology for assessing risk during Power Operation for an unplanned entry into a plant configuration. Timeliness of the risk assessment in 90AC-0AM-002-0S Subsection 8.2 is based on NUMARC 93-01 Section 11.3.2, 1. 90AC-0AM-002-0S Subsection 8.2 Flow Chart item number 27 states in part: *"The applicable unit Shift Supervisor will release activities for work per 30AC-OPS-0S section 8.1.2 after confirming that a safety assessment for the configuration has been performed. If necessary, the on-shift staff may perform additional assessments per this procedure. Emergency OR Urgent corrective maintenance required to return failed components to service should not be delayed in order to perform safety assessments, but the start of other normally scheduled work shall be delayed until an assessment is performed. If the urgent work activity is completed and restored before an assessment can be performed, no assessment is required.*

If unusual evolutions external to the plant (as listed on attachment 2) occur, revisions or additions to existing assessments may be needed. In addition, these unusual evolutions in combination with single systems listed on Attachment 1 will be assessed."

Plant Hatch's Corrective Action Program is described in administrative procedures 10AC-MGR-004-0S, Corrective Action Program and AG-MGR-64-1198N, Condition Reporting Process. If a Plant SSC has a problem or has a failure a Condition Report (CR)

is written. Hatch's Corrective Action Program provides guidance for categorizing the severity level of the CR, type of root cause evaluation and timeliness of required actions.

4. Tier 2 commitments apply only for planned maintenance, but should be evaluated as part of the Tier 3 assessment for unplanned occurrences.

   Hatch Response:

   90AC-0AM-002-0S, Section 8.2 Maintenance During Power Operation flow chart and instructions, Attachment 2 General Requirement for Risk Assessments and Attachment 3 Equipment Out of Service Assessment, provide station personnel with the methodology for assessing risk for plant configurations during power operation. Based on the guidance of Subsection 8.2, and the first block of the flowchart (and associated instructions), *"New or Revised Work Activities Identified"* will be assessed. "New" maintenance activities due to an additional OOS condition of an inscope SSC would require an assessment. If per Subsection 8.2, Attachment 2 General Requirement for Risk Assessments and Attachment 3 Equipment Out of Service assessment requires additional actions, constraints, or contingencies are required they shall be implemented accordance with the procedure.

Key Component 2:Control and Use of the CRMP Assessment Tool

1. Plant modifications and procedure changes will be monitored, assessed, and dispositioned.

   - Evaluation of changes in plant configuration or PRA model features will be dispositioned by implementing PRA model changes or by the qualitative assessment of the impact of the changes on the CRMP assessment tool. This qualitative assessment recognizes that changes to the PRA take time to implement and that changes can be effectively compensated for without compromising the ability to make sound engineering judgments.

     Hatch Response:

     The SNC PSA group has responsibilities for evaluating and dispositioning plant changes and modifications, including procedural changes affecting operator actions or system configurations for the PSA model. In addition, plant modifications are also screened at the site as a part of the Design Change Request Impact Review (procedure 17MS-MMS-002-0S). Changes identified that requiring immediate action to the online risk monitor "EOOS" is coordinator with the PSA Group by the onsite personnel from the Outage and Modification Department.

- Limitations of the CRMP assessment tool are identified and understood for each specific AOT extension.
  Hatch Response:

  Site procedure 90AC-OAM-002-0S requires the use of EOOS or the risk matrix, and section 8.2, step 18 and 19, provides directions to go to Attachment 2 and 3 if the evolution is not suitable for evaluation with either the risk matrix or EOOS.

2. Procedures exist for the control and application of CRMP assessment tools, including a description of the process when the plant configuration of concern is outside the scope of the CRMP assessment tool.
   Hatch Response:

   Procedure control for 90AC-OAM-002-0S and all Plant Hatch procedures are included in procedure 10AC-MGR-003-0 Procedure Processing. The online risk monitor "EOOS" is controlled per the SNC PSA Group procedures.
   Use of the online risk monitor "EOOS" is provided in the form of training materials for onsite personnel. Site procedure 90AC-OAM-002-0S requires the use of EOOS or the risk matrix, and section 8.2, step 18 and 19, provides directions to go to Attachment 2 and 3 if the evolution is not suitable for evaluation with either the risk matrix or EOOS.

Key Component 3: Level 1 Risk-Informed Assessment

The CRMP assessment tool utilizes at least a Level 1, at-power, internal events PRA model. The CRMP assessment may use any combination of quantitative and qualitative input. CRMP assessments can include reference to a risk matrix, pre-existing calculations, or new PRA analyses.

1. Quantitative assessments should be performed whenever necessary for sound decisionmaking.

2. When quantitative assessments are not necessary for sound decisionmaking, qualitative assessments can be performed. Qualitative assessments should consider applicable existing insights from previous quantitative assessments.
   Hatch Response (both statements):

   90AC-OAM-002-0S requires the online risk monitor "EOOS" or the risk matrix for quantitative risk assessment if applicable and Subsection 8.2 flowchart steps 18 and 19, provides directions to go to Attachment 2 and 3 if the evolution is not suitable for evaluation with either the risk matrix or EOOS.

Key Component 4: Level 2 Issues and External Events

External events and Level 2 issues are treated qualitatively or quantitatively, or both.
Hatch Response:

Level 2 issues are included in the online risk monitor "EOOS". 90AC-OAM-002, specifically, Attachments 2 General Requirement for Risk Assessments provide instruction for considering significant external events such as bad weather or severe grid loading conditions.

Second part of question number 3.

Discuss the Hatch EOOS color code in terms of quantitative measures of risk.
Hatch Response:

The color codes for EOOS are based on guidance provided in NUMARC 93-01, section 11.3.7.2. The numerical boundary defining the color codes were selected using the change in risk and a 4 day out of service interval.

The color transistion from GREEN to YELLOW for CDF is based on a change in EOOS core damage probability of 1 E-06.

The color transistion from YELLOW to ORANGE for CDF is based on a change in EOOS core damage probability of 5 E-06.

The color transistion from ORANGE to RED for CDF is based on a change in EOOS core damage probability of 1 E-05.

The color transistion from GREEN to YELLOW for LERF is based on a change in EOOS large early release probability of 1 E-07.

The color transistion from YELLOW to ORANGE for LERF is based on a change in EOOS large early release probability of 5 E-07.

The color transistion from ORANGE to RED for LERF is based on a change in EOOS large early release probability of 1 E-06.

In order to calculate the transistion RAW values used to change the color codes the "no maintenance numbers" derived specifically for the on-line risk monitor at Hatch are used.

(CDF [transistion] – CDF[no maintenance]) × (4÷365) = Core Damage Probability Limit
((CDF [transistion]÷CDF[no maintenance]) – 1) × (4÷365) = Core Damage Probability Limit ÷ CDF[no maintenance]
RAW – 1 = (Core Damage Probability Limit÷ CDF[no maintenance]) × (365÷4)
RAW = {(Core Damage Probability Limit÷ CDF[no maintenance]) × (365÷4)}+ 1

LERF values are calculated in a similar fashion.

Question 4.

Unit 1 will be used in response to this question, Unit 2 has come out of an outage within recent months.

Work evaluations are made using the Plant Hatch on-line risk monitor tool: EOOS. These evaluations cover the time frame from November 27, 2000 to December 29, 2001. The following numbers are provided as a result of the EOOS evaluation. A value of 1E-09 was used in the EOOS calculations as a cutoff frequency limit as well as in the PSA average risk model calculations.

Core Damage Frequency (CDF) as averaged for the referenced time frame = 6.62E-06
Large Early Release Frequency (LERF) as averaged for the referenced time frame = 1.56E-06

The PSA average risk model numbers are as follows.
CDF = 1.01E-05
LERF = 1.65E-06

Three risk profiles are provided from the EOOS runs and are described as follows.

A This is a complete EOOS risk profile for the referenced time frame. It includes LERF and CDF. There is a symbol chart describing the information on the graph.
B This is another profile showing CDF only compared to the overall average for the referenced time frame.
C This is the same as **B** except it is for LERF.

Major peaks are numbered 1 through 6 and correspond to the following general maintenance.

1 Plant Service Water pump maintenance,
2 Traveling Water Screen design modification and the C Diesel Generator maintenance,

3 RHR pump maintenance,

4 Diesel maintenance,

5 RCIC maintenance, and

6 Removal of the control room ventilation purge capability.

The following information estimates the maximum numbers for a diesel outage superimposed on selected frequency peaks from profiles **B** and **C**. The risk peak on profile **B** point **3** is approximately 3.5 E-05 instantaneous CDF. Assuming the C diesel generator is out of service at this time the instantaneous EOOS value is 1.79 E-04. As a note this particular condition will require a short term shutdown LCO.

LERF profile **C** point **2** accounts for the C diesel being inoperative during the time of traveling water screen design modifications. The risk peak on profile **C** point **2** is approximately 1.06 E-05.

The same calculations using minimum profile numbers are also performed. The minimum risk peak used on profile **B** is point **4**. Point 4 is diesel maintenance and due to Technical Specification shutdown requirements, two diesels out of service for a unit will require a shutdown LCO. The smaller LERF risk peak for profile **C** is point **5** which is approximately 5.5 E-06. This corresponds to a RCIC outage. The combined affects of RCIC and the C diesel out of service for LERF are 3.38 E-05. This is due to the use of RCIC in the LOSP sequences in the PSA model.

The previously discussed values are very conservative and instantaneous in nature.

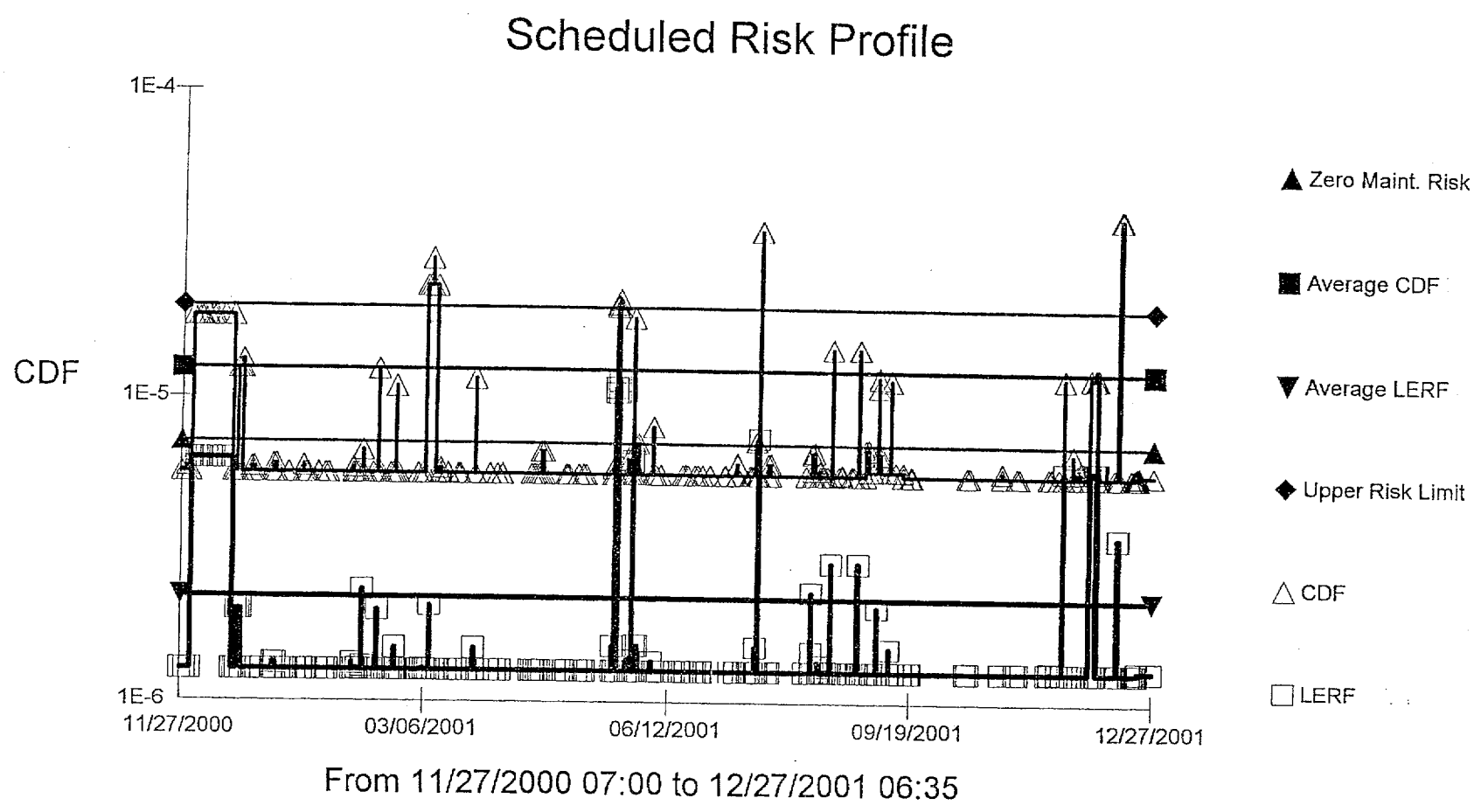
Scheduled Risk Profile
CDF
1E-4
1E-5
1E-6
11/27/2000
03/06/2001
06/12/2001
09/19/2001
12/27/2001
Zero Maint. Risk
Average CDF
Average LERF
Upper Risk Limit
CDF
LERF
From 11/27/2000 07:00 to 12/27/2001 06:35

A

Scheduler's Evaluation

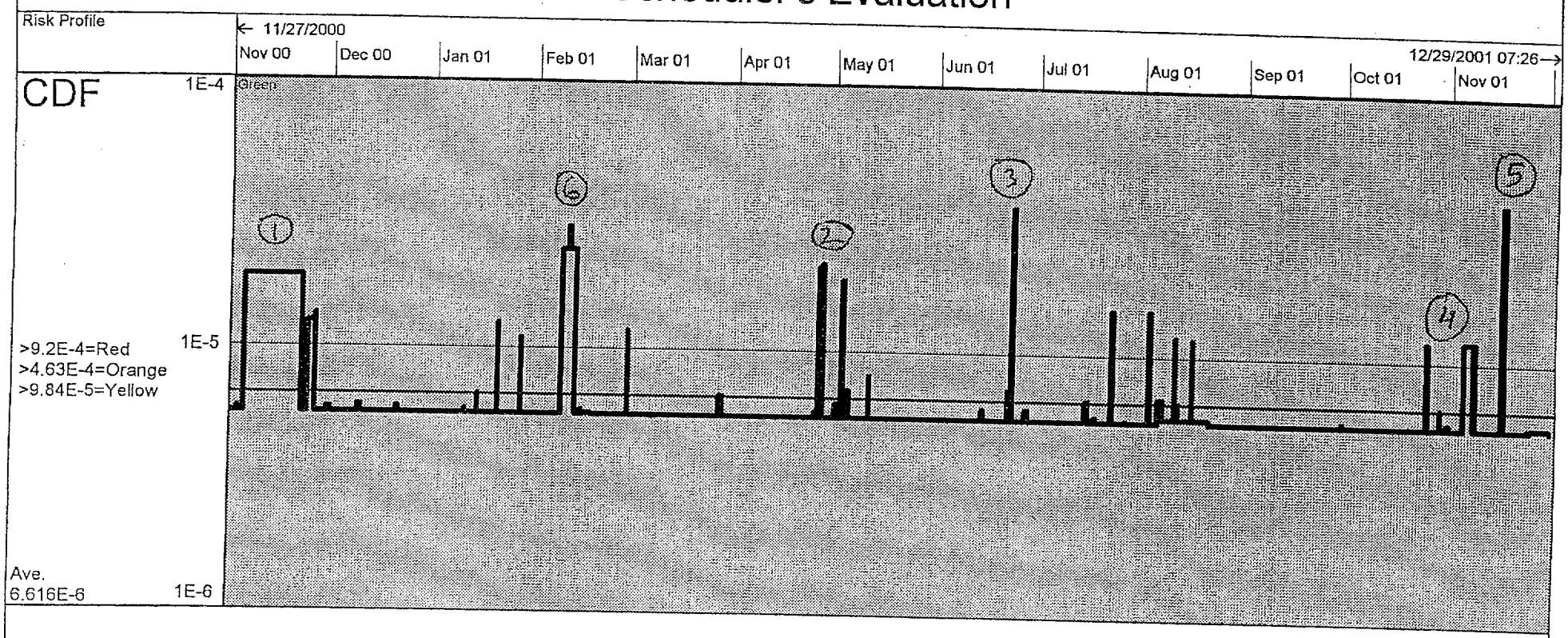

B

Printed 02/28/2002 14:46
EOOS Version 3.1

R&R Workstation
Making PSA Work for You

Scheduler's Evaluation

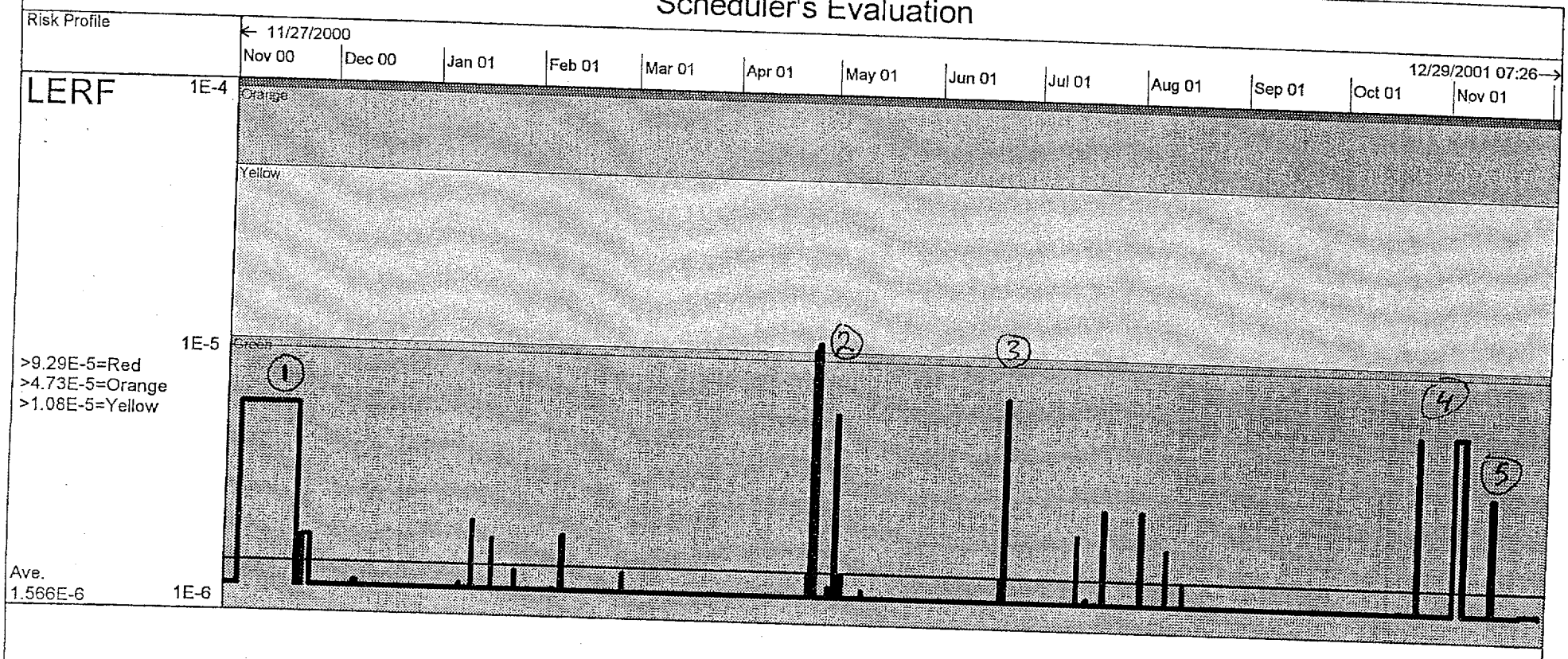

C

R&R Workstation
Making PSA Work for You

Printed 02/28/2002 14:46
EOOS Version 3.1