NMC
Committed to Nuclear Excellence

Kewaunee Nuclear Power Plant
N490 Highway 42
Kewaunee, WI 54216-9511
920.388.2560

Point Beach Nuclear Plant
6610 Nuclear Road
Two Rivers, WI 54241
920.755.2321

Kewaunee / Point Beach Nuclear
Operated by Nuclear Management Company, LLC

NRC 2002-0019

10 CFR 50.67
10 CFR 50.90

February 28, 2002

U.S. Nuclear Regulatory Commission
ATTN: Document Control Desk
Washington, DC 20555

Dockets 50-266 and 50-301
Point Beach Nuclear Plant, Units 1 and 2
License Amendment Request 224
Control Room Habitability

Ladies/Gentlemen:

By letter dated August 17, 2000 (reference NPL 2000-0372), Wisconsin Electric Power Company (WE), then licensee for the Point Beach Nuclear Plant (PBNP), committed to submit, for NRC review and approval, revised radiological dose analyses for the control room and a license amendment proposal as necessary to demonstrate continued conformance to the regulatory requirements and the PBNP licensing basis.

In accordance with the provisions of 10 CFR 50.67 and 10 CFR 50.90, Nuclear Management Company, LLC (NMC) is hereby submitting a request for review and approval of a selective scope application of an alternative source term for PBNP for control room habitability and offsite radiological dose. NMC also requests an amendment to the Technical Specifications (TS) for PBNP, Units 1 and 2.

The proposed amendment would modify TS 1.1, "Definitions", TS 3.3.5, "CREFS Actuation Instrumentation," TS 3.4.16, "RCS Specific Activity," TS 3.7.9, "CREFS," and TS 3.7.13, "Secondary Specific Activity". Additionally, the implementation of the Alternative Source Term (AST) methodology supports deletion of TS 3.9.3, "Containment Penetrations."

Attachment I provides a description, justification, and No Significant Hazards Consideration for the proposed change. Attachment II provides the safety analysis. Attachment III provides a summary of the regulatory commitments made in this submittal. Attachment IV provides the existing TS pages marked up to show the proposed change. Attachment V provides the existing TS Bases pages marked up to show the proposed change (for information only). Attachment VI provides revised (clean) TS pages.

A001

NMC requests approval of the proposed license amendment by February 2003, with a 270-day implementation period to allow for completion of necessary modifications. The approval date was administratively selected to allow for NRC review, but PBNP does not require this amendment to allow continued safe full power operation.

In accordance with 10 CFR 50.91, NMC is providing the designated State of Wisconsin official a copy of this submittal and its attachments.

To the best of my knowledge and belief, the statements contained in this document are true and correct. In some respects, these statements are not based entirely on my personal knowledge, but on information furnished by cognizant NMC employees and consultants. Such information has been reviewed in accordance with company practice and I believe it to be reliable.

Sincerely,

Mark E. Warner
Site Vice President

Subscribed and sworn before me
on this 28 day of February, 2002

Notary Public, State of Wisconsin

My commission expires on October 24, 2004.

LAS/kmd

Attachments:
- I - Description and Assessment
- II - Safety Evaluation
- III List of Regulatory Commitments
- IV - Proposed Technical Specification Changes
- V - Proposed Technical Specification Bases Changes
- VI - Revised Technical Specification Pages

cc: NRC Regional Administrator
NRC Resident Inspector
NRC Project Manager
PSCW

bcc:

R. A. Anderson	A. J. Cayia	K. M. Duescher (3)
J. Gadzala	R. R. Grigg (P460)	N. L. Hoefert
R. G. Mende	K. E. Peveler	R. P. Pulec
L. Schofield (JOSRC)	S. L. Scott	G. D. Strharsky
T. H. Taylor	M. E. Warner	D. A. Weaver (P129)
T. J. Webb	E. J. Weinkam III	R. Wood
File		

DESCRIPTION AND ASSESSMENT OF CHANGES

LICENSE AMENDMENT REQUEST 224

CONTROL ROOM HABITABILITY

POINT BEACH NUCLEAR PLANT, UNITS 1 AND 2

1.0 INTRODUCTION

As a holder of an operating license issued prior to January 10, 1997, and in accordance with 10 CFR 50.67, the Point Beach Nuclear Plant (PBNP) is voluntarily replacing the accident source term used in a selection of its design basis offsite and control room dose analyses by the selective implementation of Alternative Source Term (AST). In order to maintain the conditions and assumptions utilized by these analyses, PBNP proposes to revise the following PBNP Technical Specification (TS) requirements pursuant to 10 CFR 50.90: TS 1.1, "Definitions," TS 3.3.5, "CREFS Actuation Instrumentation," TS 3.4.16, "RCS Specific Activity," TS 3.7.9, "CREFS," and TS 3.7.13, "Secondary Specific Activity." The implementation of the AST methodology also supports the deletion of TS 3.9.3, "Containment Penetrations." In addition, the submission of the revised radiological analyses meets the PBNP commitment to the NRC to revise its radiological accident analysis for control room habitability. (Reference 1)

2.0 BACKGROUND

The Alternative Source Term analyses for the design basis accidents presented in Attachment II generally follow the guidance in Regulatory Guide 1.183, "Alternative Radiological Source Terms for Evaluation Design Basis Accidents at Nuclear Power Reactors" (Reference 2), Draft Design Guideline (DG)-1111, "Atmospheric Relative Concentration for Control Room Radiological Habitability Assessment at Nuclear Power Plants" (Reference 3), and Standard Review Plan (SRP) Section 15.0.1, "Radiological Consequence Analyses Using Alternative Source Term" (Reference 4).

The analyses assume an uprated core power level of 1683 MWt (compared to the current license limit of 1518.5 MWt), nominal 18 month fuel cycle, and the use of Westinghouse 422V+ fuel that utilizes higher enrichments and allows higher burnups than past fuel types used at PBNP. No actual increase in license power level is being sought by this submittal. The NRC approved License Amendments for PBNP to allow 18-month cycle operation and fuel type changes on July 21, 1998 and February 8, 2000, respectively.

3.0 DESCRIPTION OF CHANGE

The details of the proposed Technical Specifications amendment request and the justification for the finding of no significant hazards are provided in this attachment. The safety evaluation and supporting analyses for the proposed Technical Specifications are contained in Attachment II. Attachments IV, V, and VI provide the revisions to the affected Technical Specifications and Bases pages. Plant modifications needed to support the assumptions of the new analyses are discussed in the corresponding sections of the safety evaluation.

Summary of Proposed Technical Specifications Changes

1. TS 1.1, "Definitions"
   a. Revise the definition for L_a (containment leakage) from 0.4% to 0.2%.

2. TS 3.3.5, "CREFS Actuation Instrumentation"
   a. Revise Table 3.3.5-1, CREFS Actuation Instrumentation", to indicate that either RE-101 or RE-235 must be operable to ensure that the control room radiation instrumentation necessary to initiate the CREFS emergency make-up mode (Mode 4) is operable. (See Note "a")
   b. The Control Room Area Monitor and Control Room Air Intake trip setpoints (≤ 2 mrem/hr and ≤ 6E-6 μCi/cc, respectively) were added to Note "d" of Table 3.3.5-1. These values are the assumed analytical setpoints for the accident analyses.

3. TS 3.4.16, "RCS Specific Activity"
   a. Revise LCO Action Condition A to indicate 1.0 μCi/gm as the maximum reactor coolant dose equivalent iodine 131 (DE I-131) value.
   b. Action Condition C references Figure 3.4.16-1, "Reactor Coolant Dose Equivalent I-131 Specific Activity Limit versus Percent of Rated Thermal Power." This figure will be revised to indicate 60 μCi/gm DE I-131 as the maximum RCS limit for operations at or above 80% of rated thermal power.
   c. Revise SR 3.4.16.2 to verify 1.0 μCi/gm as the maximum reactor coolant DE I-131 value.

4. TS 3.7.9, "CREFS"
   a. Delete SR 3.7.9.5, which was created during the conversion to Improved Technical Specifications to assure the ability to manually start the control room ventilation system in the emergency make-up mode of operation following a LOCA coincident with a loss of offsite power (LOOP). This surveillance requires verification of CREFS manual start capability and alignment on an 18-month periodicity. Per Reference 1, the licensing basis for control room habitability does not need to assume a LOOP coincident with a LOCA.

5. TS 3.7.13, "Secondary Specific Activity"
   a. Revise LCO 3.7.13 and SR 3.7.13.1 to indicate that the secondary specific activity shall be less than or equal to 0.1 μCi/gm.

6. TS 3.9.3, "Containment Penetrations"
   a. Delete section 3.9.3. The new analyses do not take credit for having the containment hatch closed and in place or having air lock doors capable of closure during refueling operations, nor is credit taken for containment purge supply and exhaust system closure capability or for filtration associated with the purge stack. Therefore, TS 3.9.3 and its Bases may be deleted.

Summary of Proposed Technical Specification Bases Changes

1. Bases to TS 3.3.5, "CREFS Actuation Instrumentation"
   a. Minor editorial changes were made to the Applicable Safety Analyses, and Reference sections.
   b. Revise the LCO requirements for control room radiation instrumentation to include the analytical setpoints assumed in the accident analyses for the control room area monitor and control room air intake noble gas monitor (≤ 2 mrem/hr and ≤ 6E-6 μCi/cc, respectively).
   c. Add clarifying words to the LCO and Actions sections to support the changes to Table 3.3.5-1.

2. Bases to TS 3.6.1, "Containment"
   a. The allowable containment leakage rate was reduced from 0.4 weight percent per day to 0.2 weight percent per day.

3. Bases to TS 3.6.2, "Containment Air Locks"
   a. Reduce the allowable containment leakage rate from 0.4 weight percent per day to 0.2 weight percent per day.
   b. Minor editorial and grammatical changes were made to the Applicable Safety Analyses, Actions, and Reference sections.

4. Bases to TS 3.7.9, "CREFS"
   a. In the Background section, revise the description of CREFS to specify that the Control Room HVAC system has four modes of operation and that CREFS is a subsystem of the Control Room HVAC system. Add the containment isolation signal as an additional signal that automatically initiates Mode 4.
   b. It has been demonstrated that the licensing basis for control room habitability does not need to assume a LOOP coincident with a LOCA. (Reference 1) Revise the Background section to reflect this information.
   c. In the Applicable Safety Analyses section, delete the 2nd paragraph and its subsequent points describing the radiological effects in the control room of the stopping and subsequent restart of CREFS after a loss of offsite power. This was removed from the PBNP licensing basis based on the letter from the NRC dated April 7, 2000. (Reference 1)
   d. The LCO is revised to replace the 30 rem thyroid dose limit with a 5 rem TEDE dose limit.
   e. Delete LCO operability statement "f". Automatic actuation of CREFS is required to determine operability.

Summary of Proposed Technical Specification Bases Changes (continued)

f. Delete the Bases section related to SR 3.7.9.5. This surveillance was put in place to assure the ability to manually start the control room ventilation system in the emergency make-up mode of operation following a design basis event coincident with a loss of offsite power. It has been demonstrated that the licensing basis for control room habitability does not need to assume a LOOP coincident with a LOCA. (Reference 1)
g. Renumber SR 3.7.9.6 to SR 3.7.9.5.

5. Bases to TS 3.9.3, "Containment Penetrations"
   a. Delete Bases Section 3.9.3. The new analyses do not take credit for having the containment hatch closed and in place or having air lock doors capable of closure during refueling operations, nor is credit taken for containment purge supply and exhaust system closure capability or for filtration associated with the purge stack. Therefore, TS 3.9.3 and its Bases may be deleted.

6. Bases to TS 3.9.6, "Refueling Cavity Water Level"
   a. The decontamination factor to be used in the fuel handling accident analysis for iodine was revised to 200 per RG 1.183. The Applicable Safety Analyses section was revised to support that change.
   b. Minor editorial and grammatical changes were made to the Background, LCO, and Reference sections.

4.0 ANALYSIS

The safety evaluation and supporting analyses for the proposed Technical Specifications and proposed modifications are contained in Attachment II.

5.0 REGULATORY ANALYSIS

5.1 No Significant Hazards Determination

In accordance with the requirements of 10 CFR 50.90, Nuclear Management Company (licensee) hereby requests amendments to facility operating licenses DPR-24 and DPR-27, for Point Beach Nuclear Plant, Units 1 and 2, respectively. The proposed license amendment would revise Technical Specification (TS) 1.1, "Definitions," TS 3.3.5, "CREFS Actuation Instrumentation," TS 3.4.16, "RCS Specific Activity," TS 3.7.9, "CREFS," and TS 3.7.13, "Secondary Specific Activity", to incorporate changes resulting from the use of an Alternate Source Term (AST) and the implementation of several plant modifications. The implementation of the AST methodology also supports the deletion TS 3.9.3, "Containment Penetrations."

NMC has evaluated the proposed amendments in accordance with 10 CFR 50.91 against the standards in 10 CFR 50.92 and has determined that the operation of the Point Beach Nuclear Plant in accordance with the proposed amendments present no significant hazards. Our evaluation against each of the criteria in 10 CFR 50.92 follows.

1. **Operation of the Point Beach Nuclear Plant in accordance with the proposed amendments does not result in a significant increase in the probability or consequences of any accident previously evaluated.**

   The Alternative Source Term (AST) and those plant systems affected by implementing the proposed changes to the TS are not accident initiators and cannot increase the probability of an accident. The AST does not adversely affect the design or operation of the facility in a manner that would create an increase the probability of an accident. Rather, the AST is used to evaluate the dose consequences of a postulated accident. The revised dose calculations, except those for LOCA, use the values in the proposed Technical Specifications. The limiting design bases accidents at PBNP have been evaluated for implementation of the AST.

   These analyses have demonstrated that, with the proposed changes, the dose consequences meet the regulatory acceptance criteria of 10 CFR 50.67 and RG 1.183. A comparison of the current offsite dose calculations to the revised offsite dose calculations indicate that the proposed changes will not result in a significant increase in the predicted dose consequences for any of the analyzed accidents. Therefore, the proposed changes do not involve a significant increase in the probability or consequences of any of the selected previously analyzed accidents.

2. **Operation of the Point Beach Nuclear Plant in accordance with the proposed amendments does not result in a new or different kind of accident from any accident previously evaluated.**

   The proposed amendment will not create the possibility for a new or different type of accident from any accident previously evaluated. Changes to the allowable activity in the primary and secondary systems do not result in changes to the design or operation of these systems. The evaluation of the effects of the proposed changes indicates that all design standard and applicable safety criteria limits are met.

   The systems affected by the changes are used to mitigate the consequences of an accident that has already occurred. The proposed TS changes and modifications do not significantly affect the mitigative function of these systems. Equipment important to safety will continue to operate as designed. Component integrity is not challenged. The changes do not result in any event previously deemed incredible being made credible. The changes do not result in more adverse conditions or result in any increase in the challenges to safety systems. Therefore, operation of the Point Beach Nuclear Plant in accordance with the proposed amendments will not create the possibility of a new or different type of accident from any accident previously evaluated.

3. Operation of the Point Beach Nuclear Plant in accordance with the proposed amendments does not result in a significant reduction in a margin of safety.

The implementation of the proposed changes does not significantly reduce the margin of safety. These changes have been evaluated in the revisions to the analysis of the consequences of the design basis accidents for PBNP. The radiological analysis results in concert with the proposed Technical Specification changes, meet the regulatory acceptance criteria of 10 CFR 50.67 and RG 1.183. These acceptance criteria have been developed for the purpose of use in design basis accident analyses such that meeting these limits demonstrates adequate protection of public health and safety. The proposed changes will not degrade the plant protective boundaries, will not cause a release of fission products to the public and will not degrade the performance of any SSCs important to safety. Therefore, there is no significant reduction in the margin of safety as a result of the proposed changes.

Conclusion

Operation of the Point Beach Nuclear Plant in accordance with the proposed amendments will not result in a significant increase in the probability or consequences of any accident previously analyzed; will not result in a new or different kind of accident from any accident previously analyzed; and, does not result in a significant reduction in any margin of safety. Therefore, operation of PBNP in accordance with the proposed amendments does not result in a significant hazards determination.

6.0 ENVIRONMENTAL EVALUATION

NMC has determined that the information for the proposed amendments does not involve a significant hazards consideration, authorize a significant change in the types or total amounts of effluent release, or result in any significant increase in individual or cumulative occupational radiation exposure. Therefore, we conclude that the proposed amendments meet the categorical exclusion requirements of 10 CFR 51.22(c)(9) and that an environmental impact appraisal need not be prepared.

7.0 REFERENCES

1 USNRC letter to M. Sellmen, WE, " Point Beach Nuclear Plant, Units 1 and 2 – Discussion of Amendments Pertaining to Control Room Habitability (TAC Nos. MA 1082 and MA 1083)," April 7, 2000.

2 USNRC Regulatory Guide 1.183, "Alternative Radiological Source Terms for Evaluating Design Basis Accidents At Nuclear Power Reactors," July 2000.

3 USNRC Draft Regulatory Guide DG-1111, "Atmospheric Relative concentrations for Control Room radiological Habitability Assessments at Nuclear Power Plants," December 2001.

4 USNRC NUREG-0800, Standard Review Plan SRP-15.0.1, "Radiological Consequence Analyses Using Alternative Source Terms," July 2000.

SAFETY ANALYSIS

TABLE OF CONTENTS

1.0 Introduction

1.1 Evaluation Overview and Objective

The objective of this evaluation is to document the PBNP selective implementation of the Alternative Source Terms (AST) in accordance with 10 CFR 50.67 (Reference 2) as described in Regulatory Guide (RG) 1.183, "Alternative Source Terms for Evaluating Design Basis Accidents at Nuclear Power Reactors." (Reference 1) PBNP is revising the accident source term used in a limited number of its design basis site boundary and control room dose analyses with AST. Also included in the analysis is the use of updated control room atmospheric dispersion factors based on the ARCON96 methodology. (Reference 9)

The accidents listed below were reanalyzed to demonstrate compliance with the PBNP regulatory commitment, which requires the resubmission of the control room habitability radiological analyses as documented in letters July 9, 1997 and April 7, 2000 from NRC to WEPCO. (Reference 12 and 7)

The offsite and control room dose analyses for the following design basis accidents have been reanalyzed for the proposed change in the licensing basis as discussed above:

FSAR Chapters:
- 14.1.8, Loss of Coolant Flow (Locked Rotor)
- 14.2.1, Fuel Handling Accident
- 14.2.4, Steam Generator Tube Rupture
- 14.2.5, Rupture of a Steam Pipe (Main Steam Line Break)
- 14.2.6, Rupture of a Control Rod Mechanism Housing – RCCA Ejection
- 14.3.5, Large Break Loss of Coolant Accident

In order to support the PBNP future application for an extended power uprate, the analyses have been performed assuming reactor operation at a thermal power of 1683 MWt (102% of 1650 MWt). This results in conservative fission product inventory for operation at the current licensed power of 1518.5 MWt.

1.2 Changes to the PBNP Design and Licensing Basis

The following denotes the more significant changes to the PBNP design and licensing bases that are to be considered:

1. The AST methodology is adopted for the composition and timing of radiation releases, as well as accident specific modeling.
2. Atmospheric dispersion factors for the control room intake are reanalyzed for existing pathways.
3. Increased value is assumed for unfiltered in-leakage to the Control Room.
4. Credit for additional shielding modifications to be added to the control room.

5. A shorter discharge/decay time prior to fuel movement is considered in the FHA without reliance on ventilation filtration or isolation.
6. Changes in allowable DE I-131 concentrations in the primary and secondary systems.
7. Reduced containment leakage is modeled.
8. Crediting the use of containment spray while on recirculation (LOCA).
9. Application of a factor of two increase to the ECCS leakage limit for control room habitability radiological analysis.

1.3 Deviations from the Regulatory Guideline

Except as noted, the revised PBNP accident analyses addressed in this submittal follow the guidance provided in Regulatory Guide 1.183:

- Although the use of prophylactic drugs is not generally considered part of the standard methodology, the administration of potassium iodide (KI) to control room personnel is assumed in Locked Rotor, MSLB, Rod Ejection, and LOCA control room operator dose analyses in order to obtain acceptable results. It has been shown and NRC concurrence received that the use of KI is part of the licensing basis for the PBNP control room habitability. (Reference 7)

- Consideration of the loss of offsite power (LOOP) is taken in all accidents with regard to accident mitigation systems, excluding FHA, in order to maximizing the release from a plant system. Generally speaking, the LOOP was used to limit equipment availability for plant cooldown, which in turn results in a larger amount of activity being released. NRC has acknowledged that a LOOP need not be considered coincident with a LOCA for the purposes of evaluating control room habitability. (Reference 7)

2.0 Computer Codes

The QA Category 1 Westinghouse/S&W computer codes utilized to support this application are listed below:

1. Industry computer code, "ORIGEN2.1: Isotope Generation and Depletion Code – Matrix Exponential Method," RSIC Computer Code Collection, Oak Ridge National Laboratory, February 1996.

2. WCAP-7949, "FIPCO-V, A Computer Code for Calculating the Distribution of Fission Products in Reactor System," August 1972, J. Sejvar and M. Simon.

3. Westinghouse Proprietary Computer Program, "TITAN5," Version 4.10.

4. S&W Computer Code, SW-QADCGGP, "A Combinatorial Geometry Version of QAD5A," NU-222, V00, L02.

5. S&W Proprietary Computer Code, PERC2, "Passive Evolutionary Regulatory Consequence Code," NU-226, V00, L01.

6. Westinghouse Proprietary Computer Code, "CIRCUS," Version 1.1.

7. NRC Sponsored ARCON96, "Atmospheric Relative Concentrations in Building Wakes," developed by Pacific Northwest Laboratory, May 1997.

3.0 Radiological Evaluation Methodology

3.1 Introduction

The Point Beach Nuclear Power Plant (PBNP) licensing basis for the radiological consequences analyses currently utilizes methodologies and assumptions that are derived from TID-14844 (Reference 3) and other early guidance.

Regulatory Guide (RG) 1.183 (Reference 1) provides guidance on application of alternative source terms (AST) in revising the accident source terms used in design basis radiological consequences analyses, as allowed by 10 CFR 50.67 (Reference 2). The offsite and control room radiological consequences for PBNP are calculated using the alternative source term methodology as established in RG 1.183. The following accidents are analyzed: Locked Rotor, Fuel Handling Accident (FHA), Steam Generator Tube Rupture (SGTR), Main Steam Line Break (MSLB), Rod Ejection, and Loss of Coolant Accident (LOCA). Each accident and the specific input assumptions are described in detail in subsequent sections in this attachment.

The current licensed maximum power level is 1518.5 MWt. The analyses in this evaluation model a core power of 1683 MWt. Although the analyses were performed at a higher power level, this license amendment is not requesting approval for use of the higher power.

3.2 Common Analysis Inputs and Assumptions

The assumptions and inputs described in this section are common to analyses discussed in this report. The accident specific inputs and assumptions are discussed in Sections 7.1 through 7.6.

The total effective dose equivalent (TEDE) doses are determined at the exclusion area boundary (EAB) for the worst 2-hour interval. The TEDE doses at the low population zone (LPZ) and for the control room personnel (CR) are determined for the duration of the event. The interval for determining control room doses may extend beyond the time when the releases are terminated. This accounts for the additional dose to the operators in the control room, which will continue for as long as the activity is circulating within the control room envelope.

The TEDE dose is equivalent to the committed effective dose equivalent (CEDE) from inhalation and the deep dose equivalent (DDE) from external exposure. Effective dose equivalent (EDE) is used in lieu of DDE in determine the contribution of external dose to the TEDE consistent with Regulatory Guide 1.183. The dose conversion factors (DCFs) used in determining the CEDE dose are from the EPA Federal Guidance Report No. 11 (Reference 4) and are given in Table 3.2-1. The dose conversion factors used in determining the EDE dose are from the EPA Federal Guidance Report No. 12 (Reference 5) and are listed in Table 3.2-2.

The offsite breathing rates and the offsite atmospheric dispersion factors used in the offsite radiological calculations are provided in Tables 3.2-4 and 3.2-5, respectively. These dispersion factors are identical to those currently used in the PBNP FSAR.

Parameters used in the control room personnel dose calculations are provided in Table 3.2-6. These parameters include the normal operation flow rates, the post-accident operation flow rates, control room volume, filter efficiencies and control room operator breathing rates. Atmospheric dispersion factors are specific to each analysis and are calculated to the control room intake. These accident specific atmospheric dispersion factors are applied to the unfiltered inleakage value as well.

Each accident assumes an unfiltered inleakage value of 500 cfm into the control room. This value does not include the ventilation filter break through flow. Current licensing basis analysis for control room habitability assumes an unfiltered inleakage of 10 cfm based on the guidance of the Murphy-Campe methodology. (Reference 15) This early methodology provided a value of 10 cfm unfiltered inleakage for pressurized control rooms, in order to account for the door opening/closing. Recent industry inleakage testing of control room envelopes has shown that 10 cfm may not be a conservative value for this parameter.

In light of this industry issue, PBNP has made improvements to the integrity of the envelope in order to minimize the potential for unfiltered inleakage as well as reduce overall operator dose. These upgrades include hardcasting of ductwork, replacement of current dampers with bubble tight dampers as well as the addition of new bubble tight and balancing dampers. Additional shielding will also be added to portions of the perimeter of the control room proper. The current configuration of the control room is able to maintain a positive pressure greater than 1/8 in. w.g. between all adjacent spaces. The completed modifications as well as those in progress will be able to improve this capability. The control room envelope is discussed further in Section 6.0 of this attachment.

PBNP realizes that the NRC is in the process of releasing a draft generic letter and draft regulatory guides in the near future regarding control room habitability. Since these NRC documents cannot be specifically addressed in this submittal, PBNP will address those issues when the final generic letter is released.

No credit is taken for the radioactive decay during release and transport or for cloud depletion by ground deposition during transport to the control room, exclusion area boundary (EAB) or outer boundary of the low population zone (LPZ). Decay is a depletion mechanism credited only for a source term prior to release to the atmosphere and for activity after it enters the control room. Decay constants for each nuclide are provided in Table 3.2-7.

The primary to secondary leakage assumed in the steam generators is applicable in all of the accidents except FHA and LOCA. The amount of primary to secondary SG tube leakage is assumed to be equal to the Technical Specification 3.4.13 limit of 0.7 gpm total (i.e., 500 gpd per SG). The density for this leakage is assumed to be 47 lb_m/ft^3.

Surveillance tests and facility instrumentation used to show compliance with the leak rate TS are done under cooled liquid conditions. However, final calculations take into consideration the nominal temperature and pressure of the RCS and secondary side of the SG. The plant procedures assume the average RCS fluid temperature, T_{Ave}, whereas the analyses assume the lowest temperature in the allowable range yielding a slightly larger density. Although the primary to secondary pressure differential drops throughout these events, the constant flow rate is conservatively maintained.

The core fission product activity and nominal reactor coolant activity are discussed in detail in Section 4.0.

3.3 Dose Calculation Models

Offsite Dose Calculation Models

The TEDE dose is calculated for the worst 2-hour period at the EAB. At the LPZ the TEDE dose is calculated up to the time all releases are terminated. The TEDE doses are obtained by combining the CEDE doses and the EDE doses.

Offsite inhalation doses (CEDE) are calculated using the following equation:

$$D_{CEDE} = \sum_i \left[DCF_i \left(\sum_j (IAR)_{ij} (BR)_j (\chi/Q)_j \right) \right]$$

where:

D_{CEDE} = CEDE dose via inhalation (rem).
DCF_i = CEDE dose conversion factor (rem/Ci) via inhalation for isotope i (Table 3.2-1)
$(IAR)_{ij}$ = integrated activity of isotope i released during the time interval j (Ci)
$(BR)_j$ = breathing rate (m^3/sec) during time interval j (Table 3.2-4)
$(\chi/Q)_j$ = atmospheric dispersion factor (sec/m^3) during time interval j (Table 3.2-5)

Offsite external exposure (EDE) doses are calculated using the following equation:

$$D_{EDE} = \sum_i \left[DCF_i \left(\sum_j (IAR)_{ij} (\chi/Q)_j \right) \right]$$

where:

D_{EDE} = external exposure dose via cloud immersion (rem)
DCF_i = EDE dose conversion factor (rem·m^3/Ci·sec) via external exposure for isotope i (Table 3.2-2)
$(IAR)_{ij}$ = integrated activity (Ci) of isotope i released during the time interval j
$(\chi/Q)_j$ = atmospheric dispersion factor (sec/m^3) during time interval j (Table 3.2-5)

Control Room Dose Calculation Models

CEDE (doses due to inhalation) and EDE (doses due to external exposure) are calculated for 30 days in the control room for all accidents except fuel handling accident. Control room operator doses for FHA are calculated for 24 hours.

The control room is modeled as a discrete volume. The atmospheric dispersion factors calculated for the transfer of activity to the control room intake are used to determine the activity available at the control room intake. The inflow (filtered and unfiltered) to the control room is used to calculate the concentration of activity in the control room. Control room parameters used in the analyses are presented in Table 3.2-6. Control room atmospheric dispersion factors used in each analysis are provided in the input assumption table for that accident.

All accident analyses, excluding SGTR and FHA, assume that potassium iodide (KI) pills are taken by the control room operators. This effectively reduces the iodine inhalation portion of the dose to the thyroid (i.e., the committed dose equivalent organ dose) by a factor of 10. The TEDE dose for the control room operator is calculated by adding the EDE dose to the CEDE dose corrected to account for the dose reduction to the thyroid. Taking credit for KI is part of the current PBNP licensing basis. (Reference 7)

Control room inhalation doses are calculated using the following equation:

$$D_{CEDE} = \sum_i \left[DCF_i \left(\sum_j Conc_{ij} * (BR)_j * (OF)_j \right) \right]$$

where:

D_{CEDE} = CEDE dose via inhalation (rem)
DCF_i = CEDE dose conversion factor (rem/Ci) via inhalation for isotope i (Table 3.2-1)
$Conc_{ij}$ = concentration (Ci-sec/m^3) in the control room of isotope i, during time interval j, calculated dependent upon inleakage and filtered inflow
$(BR)_j$ = breathing rate (m^3/sec) during time interval j (Table 3.2-4)
$(OF)_j$ = occupancy factor during time interval j (Table 3.2-6)

The credit for KI is taken by determining the CEDE dose due to each iodine isotope. The fraction of that dose that is from the thyroid exposure is calculated and then reduced by a factor of 10 to credit KI ingestion. The fraction of the dose that is not from the thyroid is calculated and not reduced. The reduced thyroid dose is added to the portion of the dose not from the thyroid to obtain the new total control room dose from iodine inhalation. This is added to the control room dose from other nuclides and from external iodine exposure using the event specific results.

The reduced thyroid committed effective dose equivalent is calculated for each isotope of iodine by:

$$D_{CEDE-Thyroid} = \sum_i D_{CEDE-i} * F_{Thyroid-i} * 0.10$$

where:

$D_{CEDE\text{-}Thyroid}$ = committed effective dose equivalent (rem) to the thyroid due to the inhalation of iodine
$D_{CEDE\text{-}i}$ = committed effective dose equivalent (all organs) due to the inhalation of isotope i of iodine (rem)
$F_{Thyroid\text{-}i}$ = fractional contribution of the thyroid to the overall dose defined as $= \frac{CDE_i * WF_{Thyroid}}{CEDE_i}$ (Table 3.2-3)
CDE_i = committed dose equivalent dose conversion factor (rem/Ci) for the thyroid due to the inhalation of isotope i of iodine (Table 3.2-3)
$WF_{Thryroid}$ = thyroid organ weighting factor equal to 0.03 (Reference 4)
$CEDE_i$ = committed effective dose equivalent dose conversion factor (rem/Ci) for isotope i of iodine (Table 3.2-1)
0.10 = dose reduction credit for the ingestion of KI (Reference 16)

The committed effective dose equivalent to all other organs is calculated for each isotope of iodine by:

$$D_{CEDE-Remaining} = \sum_i D_{CEDE-i} * (1 - F_{Thyroid-i})$$

where:

$D_{CEDE-Remaining}$ = committed effective dose equivalent (rem) to the remaining organs due to the inhalation of iodine

All other parameters are defined above.

Summing the $D_{CEDE-Thyroid}$ and $D_{CEDE-Remaining}$ then simplifying the result, the commitment effective dose equivalent corrected for KI is calculated as below:

$$(D_{CEDE})_{KI} = \sum_i D_{CEDE-i} * [1 - (0.90 * F_{Thyroid-i})]$$

Control room external exposure doses are calculated using the following equation:

$$D_{EDE} = \left(\frac{1}{GF}\right) * \sum_i DCF_i \left(\sum_j Conc_{ij} * (OF)_j\right)$$

where:

D_{EDE} = external exposure dose via cloud immersion in rem.

GF = geometry factor, calculated based on Reference 6, using the equation: $GF = \frac{1173}{V^{0.338}}$, where V is the control room volume in ft^3

DCF_i = EDE dose conversion factor ($rem \cdot m^3/Ci \cdot sec$) via external exposure for isotope i (Table 3.2-2)

$Conc_{ij}$ = concentration ($Ci\text{-}sec/m^3$) in the control room of isotope i, during time interval j, calculated dependent upon inleakage and filtered inflow

$(OF)_j$ = occupancy factor during time interval j (Table 3.2-6)

Table 3.2-1: Committed Effective Dose Equivalent Dose Conversion Factors

Isotope	DCF (rem/curie)	Isotope	DCF (rem/curie)
I-131	3.29E+04	Cs-134	4.62E+04
I-132	3.81E+02	Cs-136	7.33E+03
I-133	5.85E+03	Cs-137	3.19E+04
I-134	1.31E+02	Rb-86	6.63E+03
I-135	1.23E+03		
		Ru-103	8.95E+03
Kr-85m	N/A	Ru-105	4.55E+02
Kr-85	N/A	Ru-106	4.77E+05
Kr-87	N/A	Rh-105	9.56E+02
Kr-88	N/A	Mo-99	3.96E+03
Xe-131m	N/A	Tc-99m	3.30E+01
Xe-133m	N/A		
Xe-133	N/A	Y-90	8.44E+03
Xe-135m	N/A	Y-91	4.89E+04
Xe-135	N/A	Y-92	7.80E+02
Xe-138	N/A	Y-93	2.15E+03
		Nb-95	5.81E+03
Te-127	3.18E+02	Zr-95	2.37E+04
Te-127m	2.15E+04	Zr-97	4.33E+03
Te-129m	2.39E+04	La-140	4.85E+03
Te-129	9.00E+01	La-141	5.81E+02
Te-131m	6.40E+03	La-142	2.53E+02
Te-132	9.44E+03	Nd-147	6.85E+03
Sb-127	6.04E+03	Pr-143	1.09E+04
Sb-129	6.44E+02	Am-241	4.44E+08
		Cm-242	1.73E+07
Ce-141	8.96E+03	Cm-244	2.48E+08
Ce-143	3.39E+03		
Ce-144	3.74E+05	Sr-89	4.14E+04
Pu-238	3.92E+08	Sr-90	1.3E+06
Pu-239	4.30E+08	Sr-91	1.66E+03
Pu-240	4.30E+08	Sr-92	8.10E+02
Pu-241	8.26E+06	Ba-139	1.70E+02
Np-239	2.51E+03	Ba-140	3.74E+03

Table 3.2-2: Effective Dose Equivalent Dose Conversion Factors

Isotope	DCF (rem·m^3/Ci·sec)[1]	Isotope	DCF (rem·m^3/Ci·sec)[1]
I-131	6.734E-2	Cs-134	0.2801
I-132	0.4144	Cs-136	0.3922
I-133	0.1088	Cs-137 [2]	0.1066
I-134	0.4810	Rb-86	1.780E-02
I-135	0.2953		
		Ru-103	8.325E-02
Kr-85m	2.768E-02	Ru-105	0.1410
Kr-85	4.403E-04	Ru-106	0.0
Kr-87	0.1524	Rh-105	1.376E-02
Kr-88	0.3774	Mo-99	2.694E-02
Xe-131m	1.439E-03	Tc-99m	2.179E-02
Xe-133m	5.069E-03		
Xe-133	5.772E-03	Y-90	7.030E-04
Xe-135m	7.548E-02	Y-91	9.620E-04
Xe-135	4.403E-02	Y-92	4.810E-02
Xe-138	0.2135	Y-93	1.776E-02
		Nb-95	0.1384
Te-127	8.954E-04	Zr-95	0.1332
Te-127m	5.439E-04	Zr-97	3.337E-02
Te-129m	5.735E-03	La-140	0.4329
Te-129	1.018E-02	La-141	8.843E-03
Te-131m	0.2594	La-142	0.5328
Te-132	3.811E-02	Nd-147	2.290E-02
Sb-127	0.1232	Pr-143	7.770E-05
Sb-129	0.2642	Am-241	3.027E-03
		Cm-242	2.105E-05
Ce-141	1.269E-02	Cm-244	1.817E-05
Ce-143	4.773E-02		
Ce-144	3.156E-03	Sr-89	2.860E-04
Pu-238	1.806E-05	Sr-90	2.786E-05
Pu-239	1.569E-05	Sr-91	0.1277
Pu-240	1.758E-05	Sr-92	0.2512
Pu-241	2.683E-07	Ba-139	8.029E-03
Np-239	2.845E-02	Ba-140	3.175E-02

1 Table III.1 in FGR 12 (Reference 5) gives dose conversion factors in Sv·m^3/Bq·sec; therefore, each value was multiplied by 3.7E+12 rem/Sv·Bq/Ci to get the units of rem·m^3/Ci·sec.

2 This is the DCF for BA-137m. Because a significant amount of Ba-137m is produced through Cs-137 decay and the DCF for Cs-137 is lower, the DCF for Ba-137m is used.

Table 3.2-3: CDE and Fractional CEDE for Iodine

Nuclide	CDE-Thyroid (Sv/Bq)	WF - Thyroid	CEDE – Thyroid (Sv/Bq)	Thyroid Fraction of the CEDE
I-131	2.92E-07	0.03	8.89E-09	0.985
I-132	1.74E-09	0.03	1.03E-10	0.507
I-133	4.86E-08	0.03	1.58E-09	0.923
I-134	2.88E-10	0.03	3.55E-11	0.243
I-135	8.46E-09	0.03	3.32E-10	0.764

Table 3.2-4: Offsite Breathing Rates

	Offsite Breathing Rates (m^3/sec)
0 - 8 hours	3.5E-04
8 - 24 hours	1.8E-04
>24 hours	2.3E-04

Table 3.2-5: Offsite Atmospheric Dispersion Factors

	Offsite Atmospheric Dispersion Factors (sec/m^3)
Exclusion Area Boundary[1]	5.0E-04
Low Population Zone	
0 - 2 hours	3.0E-05
2 - 24 hours	1.6E-05
1 - 4 days	4.2E-06
> 4 days	8.6E-07

[1] This exclusion area boundary atmospheric dispersion factor is conservatively applied during all time intervals in the determination of the limiting 2-hour period.

Table 3.2-6: Control Room Parameters

Volume	65,243 ft^3
Control Room Unfiltered In-Leakage	500 cfm
Normal Mode Ventilation Flow Rates	
Filtered Makeup Flow Rate	0.0 cfm
Filtered Recirculation Flow Rate	0.0 cfm
Unfiltered Makeup Flow Rate	2000.0
Emergency Mode Ventilation Flow Rates	
Filtered Makeup Flow Rate	4950 cfm ± 10%
Filtered Recirculation Flow Rate	0.0 cfm
Unfiltered Makeup Flow Rate	0.0 cfm
Filter Efficiencies	
Elemental	95%
Organic	95%
Particulate	99%
CR Radiation Monitor Setpoint	6.0E-6 μCi/cc for Xe-133
CR Radiation Monitor Location (RE-235)	Ventilation Line upstream of filter
CR Gamma Dose Area Monitor Setpoint	2 mrem/hr
CR Gamma Dose Monitor Location (RE-101)	Wall in the Center of Control Room
Delay to Switch CR HVAC Normal Mode to Emergency Mode	30 seconds[(1)]
Breathing Rate - Duration of the Event	3.5E-4 m^3/sec
Occupancy Factors	
0 - 24 hours	1.0
1 - 4 days	0.6
4 - 30 days	0.4

[1] Delay for the steam line break dose analysis; all of the accident analyses assume a conservative delay time of 60 seconds.

Table 3.2-7: Nuclide Decay Constants

Isotope	Decay Constant (hr^{-1})	Isotope	Decay Constant (hr^{-1})
I-131	0.00359	Cs-134	3.84E-05
I-132	0.301	Cs-136	2.2E-03
I-133	0.0333	Cs-137	2.64E-06
I-134	0.791	Rb-86	1.55E-03
I-135	0.105		
		Ru-103	7.35E-04
Kr-85m	0.155	Ru-105	0.156
Kr-85	7.38E-06	Ru-106	7.84E-05
Kr-87	0.545	Rh-105	1.96E-02
Kr-88	0.244	Mo-99	1.05E-02
Xe-131m	0.00243	Tc-99m	0.115
Xe-133m	0.0132		
Xe-133	0.00551	Y-90	1.08E-02
Xe-135m	2.72	Y-91	4.94E-04
Xe-135	0.0763	Y-92	0.196
Xe-138	2.93	Y-93	0.0686
		Nb-95	8.22E-04
Te-127	7.41E-02	Zr-95	4.51E-04
Te-127m	2.65E-04	Zr-97	4.1E-02
Te-129m	8.6E-04	La-140	1.72E-02
Te-129	0.598	La-141	0.176
Te-131m	2.31E-02	La-142	0.45
Te-132	8.86E-03	Nd-147	2.63E-03
Sb-127	7.5E-03	Pr-143	2.13E-03
Sb-129	0.16	Am-241	1.83E-07
		Cm-242	1.77E-04
Ce-141	8.89E-04	Cm-244	4.37E-06
Ce-143	0.021		
Ce-144	1.02E-04	Sr-89	5.72E-04
Pu-238	9.02E-07	Sr-90	2.72E-06
Pu-239	3.29E-09	Sr-91	0.073
Pu-240	1.21E-08	Sr-92	0.256
Pu-241	5.5E-06	Ba-139	0.502
Np-239	0.0123	Ba-140	2.27E-03

4.0 Radiation Source Terms

4.1 Core Inventory

A new core source term has been calculated for use in the radiological accident analyses. The inventory of the fission products in the reactor core is based on maximum full-power operation of the core at a power level equal to 1683 MWt, and current licensed values of fuel enrichment and burnup. The core mass calculated is 48.0 MTU with an equilibrium cycle length of 17175 MWD/MTU. The fuel was modeled with an active fuel length of 132 inches with axial blanket regions of six inches in length. The current licensing core power level is 1518.5 MWt, although the analyses were performed at the higher power level, this amendment request is not asking approval for operation at the higher power level.

The ORIGEN2 computer code was used to determine the equilibrium core inventory. ORIGEN2 is a versatile point depletion and radioactive decay computer code for use in simulating nuclear fuel cycles and calculating the nuclide compositions and characteristics of materials contained therein. The equilibrium core inventory runs model a single assembly in each of seven regions. Sixteen new feed assemblies with an active fuel enrichment of 4.40 w/o and 24 assemblies with an active fuel enrichment of 4.95 w/o are assumed. In each assembly, the axial blanket region is assumed to have an enrichment of 2.60 w/o. An average enrichment is calculated for each type of assembly for input to ORIGEN2.

Burnup calculations, reflecting each of the appropriate power histories are performed. The ORIGEN2 runs model a single assembly in each of the seven regions: 16 assemblies of fresh (4.40 w/o), once-burnt and twice-burnt "A" regions, 24 assemblies of fresh (4.95 w/o), once burnt and twice burnt "B" regions, and a seventh region consisting of a single thrice-burnt "A" assembly. The total inventory for each region at the end of the equilibrium cycle is then determined by multiplying the assembly value by the number of assemblies per region. Finally, the seven regions are summed to produce a total core inventory. No shutdowns are modeled between cycles, while strictly conservative, this simplification is expected to have virtually no effect on core inventory. The equilibrium core at the end of a fuel cycle is assumed to consist of fuel assemblies with once, twice and thrice burnups.

The core inventory developed using ORIGEN2 based on the above methodology includes many isotopes that are not dose significant. Only those dose significant isotopes relative to light water reactor accidents is presented in Table 4.1-1.

4.2 Coolant Inventory

For the reactor coolant system, maximum coolant activities obtained during a cycle of operation are calculated. Small cladding defects in fuel are assumed present at initial core loading and uniformly distributed throughout the core.[21] The radiation source is based on 1% of the rods contain fuel defects and operation at the core power of 1683 MWt.[21] The RCS activity is determined using a calculated minimum liquid volume to obtain conservative concentrations. Other parameters used include the pertinent information concerning the expected coolant cleanup flow rate, demineralizer effectiveness, and volume control tank noble gas stripping behavior.

The Chemical and Volume Control System (CVCS) is assumed to be operated with 40 gpm letdown flow and no purging of the volume control tank (VCT) in order to conservatively increase the RCS activities. By not purging, gases are retained in the vapor portion of the VCT thereby limiting any additional gases from exiting the reactor coolant.[24] The source term for the RCS includes the decay products of the parent and daughter nuclides and assumes that there is no RCS leakage or activity reduction due to pressurizer operation.

The Westinghouse QA Category I Proprietary computer code, FIPCO, is used to calculate the reactor coolant system (RCS) maximum coolant activity obtained during a cycle of operation. The core inventory generated by ORIGEN2, as discussed, above is relayed to FIPCO to determine the activity inventories in the RCS.

The coolant activities tabulated are the maximum concentrations that occur during the fuel cycle from startup through the equilibrium cycle. Nuclides of fission and corrosion products listed in ANS Standard ANSI/ANS 18.1 are included as well as other nuclides important to shielding calculations.[28] (Reference 8)

The reactor coolant inventory based on 1% fuel defect is listed in Table 4.2-1. The DE I-131 concentrations for the primary and secondary limits are listed in Table 4.2-2.

4.3 Gap Inventory for Non-LOCA Accidents

No exceptions are taken from the gap fractions listed in Table 3 of Regulatory Guide 1.183. These fractions serve as a basis for Locked Rotor, Control Rod Drive Ejection, Main Steam Line Break, and Steam Generator Tube Rupture. The gap fractions are listed in Table 4.3-1.

Table 4.1-1: Equilibrium Core Total Fission Product Activities at 1683 MWt

Isotope	Activity (Ci)	Isotope	Activity (Ci)
I-131	4.48E+07	Cs-134	9.23E+06
I-132	6.46E+07	Cs-136	2.30E+06
I-133	9.15E+07	Cs-137	5.92E+06
I-134	1.01E+08	Rb-86	9.36E+04
I-135	8.56E+07		
		Ru-103	6.84E+07
Kr-85m	1.20E+07	Ru-105	4.59E+07
Kr-85	5.45E+05	Ru-106	2.44E+07
Kr-87	2.31E+07	Rh-105	4.25E+07
Kr-88	3.25E+07	Mo-99	8.20E+07
Xe-131m	4.81E+05	Tc-99m	7.17E+07
Xe-133m	2.85E+06		
Xe-133	9.07E+07	Y-90	4.49E+06
Xe-135m	1.79E+07	Y-91	5.73E+07
Xe-135	2.33E+07	Y-92	5.93E+07
Xe-138	7.58E+07	Y-93	6.83E+07
		Nb-95	7.76E+07
Te-127	4.68E+06	Zr-95	7.69E+07
Te-127m	6.20E+05	Zr-97	7.55E+07
Te-129m	2.10E+06	La-140	8.22E+07
Te-129	1.40E+07	La-141	7.48E+07
Te-131m	6.44E+06	La-142	7.24E+07
Te-132	6.36E+07	Nd-147	3.01E+07
Sb-127	4.72E+06	Pr-143	6.84E+07
Sb-129	1.42E+07	Am-241	7.95E+03
		Cm-242	2.01E+06
Ce-141	7.58E+07	Cm-244	1.76E+05
Ce-143	6.96E+07		
Ce-144	5.93E+07	Sr-89	4.46E+07
Pu-238	1.58E+05	Sr-90	4.31E+06
Pu-239	1.60E+04	Sr-91	5.47E+07
Pu-240	2.33E+04	Sr-92	5.90E+07
Pu-241	6.36E+06	Ba-139	8.20E+07
Np-239	8.54E+08	Ba-140	7.94E+07

Table 4.2-1: RCS Coolant Concentrations

Based on 1683 MWt and 1% Fuel Defect

Isotope	Activity (μCi/gm)
I-131	2.451
I-132	2.618
I-133	3.962
I-134	0.5429
I-135	2.049
Kr-85m	1.521
Kr-85	7.557
Kr-87	1.004
Kr-88	2.822
Xe-131m	2.723
Xe-133m	4.518
Xe-133	244.8
Xe-135m	0.4318
Xe-135	7.913
Xe-138	0.6452
Cs-134	2.109
Cs-136	2.225
Cs-137	1.726
Rb-86	0.02232

Table 4.2-2: Iodine Specific Activities (μCi/gm)

Primary Coolant Based on 1.0 and 60.0 μCi/gm of DE I-131
Secondary Coolant Based on 0.1 μCi/gm of DE I-131

	Primary Coolant		Secondary Coolant
Nuclide	**1 μCi/gm**	**60 μCi/gm**	**0.1 μCi/gm**
1-131	0.77	46.16	0.077
1-132	0.82	49.31	0.082
1-133	1.24	74.62	0.124
1-134	0.17	10.22	0.017
1-135	0.64	38.59	0.064

Table 4.3-1: Non-LOCA Fraction of Fission Product Inventory in the Gap

Group	Fraction
I-131	0.08
Kr-85	0.10
Other Noble Gases	0.05
Other Halogens	0.05
Alkali Metals	0.12

5.0 Accident Atmospheric Dispersion Factors (χ/Q)

5.1 Control Room Atmospheric Dispersion Factors

The control room intake χ/Q values for the five release paths are calculated using the latest version of the "ARCON96: Atmospheric Relative Concentrations in Building Wakes" methodology. (Reference 9) Input data consists of: hourly on-site meteorological data; release characteristic such as release height; the building area affecting the release; and various receptor parameters such as its distance and direction from the release to the control room air intake and intake height.

A continuous temporally representative 3-year period of hourly average data from the PBNP primary meteorological tower (i.e., January 1, 1997 through December 31, 1999) is used in this calculation. Each hour of data, at a minimum, has a validated wind speed and direction at the 10-meter level and a temperature difference between the 45 and 10-meter levels. The data recovery average for all three years is greater than 90%. The individual average for years 1997 and 1998 were greater than 93%; however, 1999 had less than 90% data recovery.

Most of the data in December 1999 is unavailable due to the replacement of the meteorology data recorders in the control room. The data had been captured via strip chart recorders. In December of 1999, these recorders were replaced with a digital recorder. While the data recorders were out of service, meteorological data was received from the Kewaunee Nuclear Power Plant, roughly five miles North of Point Beach. This is a compensatory measure is commensurate with the actions taken per the PBNP Emergency Plan if backup meteorological data is needed. Although the Kewaunee data is qualified for use in an emergency scenario/situation, it was deemed not appropriate for developing site-specific accident dispersion factors to be used in a licensing application.

All releases are conservatively treated as ground level as there are no releases at this site that are high enough to escape the aerodynamic effects of the plant buildings (i.e., 2.5 times Containment Building height per Reference 10). All releases are assumed to be under the influence of the containment building wake effect, with the exception of the spent fuel building release. The applicable structure relative to building wake effects on the spent fuel building release is the auxiliary building.

For PBNP, release source from the containment building during a large break loss of coolant accident will be treated as diffuse source (i.e., the containment can potentially leak anywhere on the exposed surface). In this accident, the activity released is assumed to be homogeneously distributed throughout the containment building and released at a constant rate from the building surface. In order to have ARCON 96 treat the containment surface area as a virtual point source, initial horizontal and vertical diffusion coefficients are approximated. These diffusion coefficients were calculated by dividing the containment width and height by six as directed by DG-1111. (Reference 11) For PBNP, the containment width is 34.14 m and height is 39.85 m; therefore, the horizontal and vertical coefficients are 5.69 m and 6.64 m, respectively. In addition, the atmospheric dispersion factors were calculated using the shortest distance between the containment building the control room intake. Both Unit 1 and Unit 2 χ/Q were calculated in this manner; however, χ/Q associated with Unit 2 yielded a more conservative atmospheric dispersion factor. All other release paths are treated as point sources.

The specific release point/paths for which χ/Q values are calculated are listed below. These locations generated the most conservative atmospheric dispersion factors for the intended application. For each release location, the receptor is the control room fresh air intake. This receptor location is also used conservatively for unfiltered inleakage. Atmospheric dispersion factors calculated at the north and south control room doors were lower than at the control room air intake structure. Release locations 1 and 2 were used to calculate the concentrations at the North and South doors of the control room 46-foot level for purposes of determining the external cloud shine dose. Figure 5.1-1 shows the release locations with respect to the receptor locations.

1. Unit 2 Containment Wall
2. Auxiliary Building Vent Stack
3. Unit 2 Main Steam Safety Valves/Atmospheric Dump Valves
4. Unit 2 Containment Façade
5. Unit 2 Purge Stack

The following assumptions are made for these calculations:

1. The plume centerline from each release is conservatively transported directly over the control room air intake or north and south doors.
2. All releases are assumed to be under the influence of the containment building wake effect, with the exception of the spent fuel building release. The applicable structure relative to building wake effects on the spent fuel building release is the auxiliary building based on the release to receptor orientation.
3. The MSSV/ADV releases (i.e., Unit 2 Safeties) are from the approximate center of the discharge vents.
4. The control room air intake χ/Q values are representative of the χ/Q values for the center of the control room, and the north and south doors since the distances and directions from these releases to these receptors are very similar.

5. The ARCON96 default wind direction range of 90°, centered on the direction that transports the gaseous effluents from the release points to the receptors is used in the calculation per DG-1111. (Reference 11)
6. The ARCON96 values for surface roughness length (i.e., 0.20 meter) and sector averaging constant (i.e., 4.3) are based on DG-1111. (Reference 11)
7. All releases are conservatively treated as ground level as there are no release conditions that merit categorization as an elevated release (i.e., 2.5 times the containment building height, Reference 10) with respect to the PBNP configuration.

The χ/Q values for all release locations are summarized in Table 5.1-1. Figure 5.1-1 shows the release locations in relation to the control room intake.

5.2 Offsite Atmospheric Dispersion Factors

The atmospheric dispersion (χ/Q) values for the PBNP exclusion area boundary (EAB) and the low population zone (LPZ) are those from the current licensing basis. These values were developed from the guidance provided in Regulatory Guide 1.145 and meteorological data collected at the site from January 1, 1991 through December 31, 1993. The offsite χ/Q values are presented in Table 5.2-1 and represent the maximum sector χ/Q values.

Table 5.1-1: Point Beach Control Room Atmospheric Dispersion Factors (sec/m^3)

	Averaging Period				
Release Location	**0 – 2 hr**	**2 – 8 hr**	**8 – 24 hr**	**1 – 4 d**	**4 – 30 d**
Unit 2 Containment Wall	1.34E-03	1.02E-03	3.88E-04	3.04E-04	2.23E-04
Auxiliary Building Vent Stack	1.75E-03	1.25E-03	4.52E-04	3.34E-04	2.91E-04
Unit 2 MSSV/ADV	3.75E-03	2.58E-03	9.28E-04	7.58E-04	6.91E-04
Unit 2 Containment Facade	1.73E-02	1.24E-02	4.27E-03	3.66E-03	3.11E-03
Unit 2 Purge Stack	5.51E-03	3.90E-03	1.27E-03	1.04E-03	8.91E-04

Table 5.2-1: Point Beach Offsite Atmospheric Dispersion Factors (sec/m^3)

	Averaging Period			
Receptor Location	**0 – 8 hr**	**8 – 24 hr**	**1 – 4 d**	**4 – 30 d**
Exclusion Area Boundary	5.0E-04	5.0E-04	5.0E-04	5.0E-04
Low Population Zone	3.0E-05	1.6E-05	4.2E-06	8.6E-07

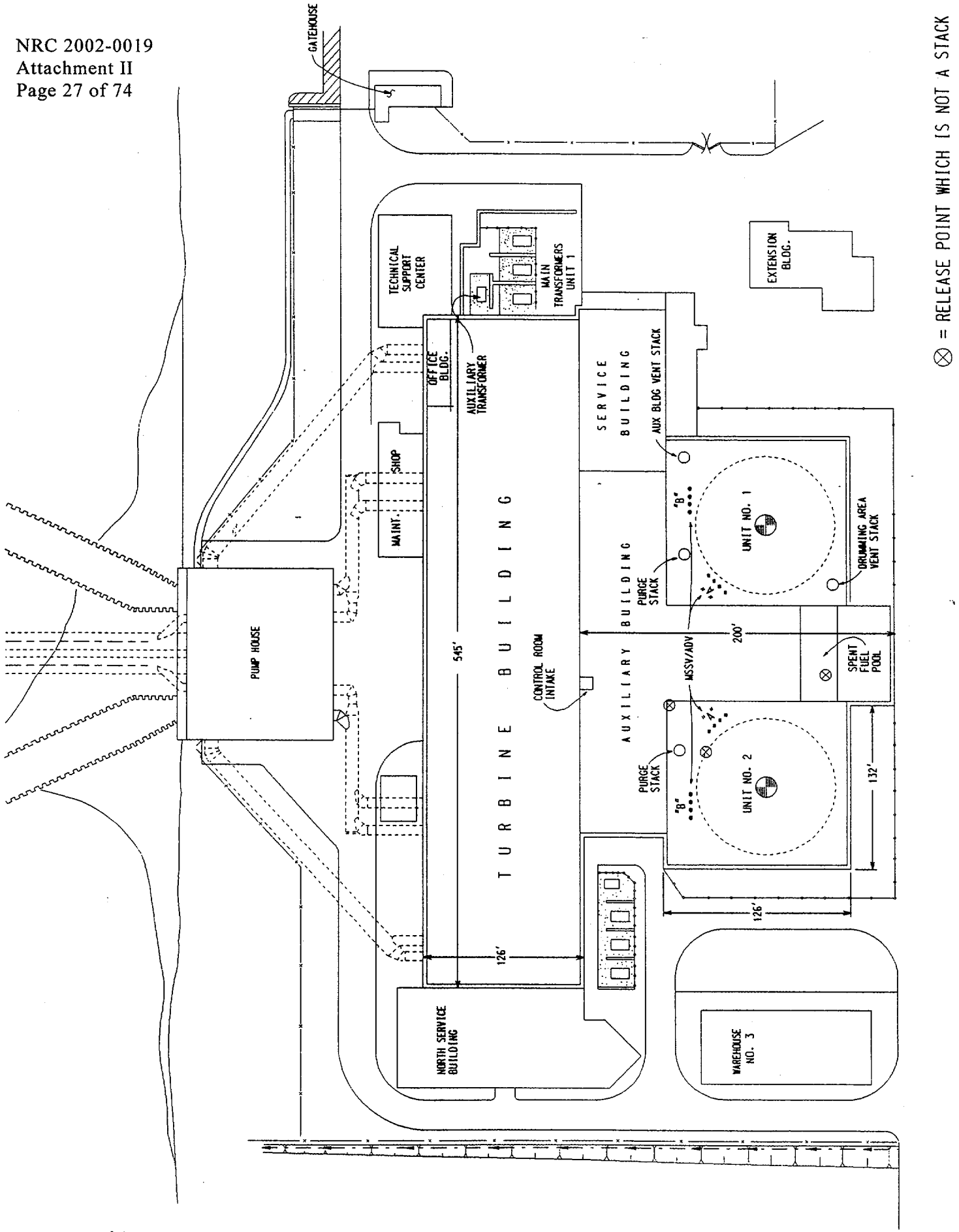

Figure 5.1-1: Release Locations in Relation to the Control Room Intake

6.0 Control Room Envelope

6.1 Control Room Licensing Basis

The PBNP control room design was implemented and licensed under site specific General Design Criterion (GDC) 11, which was in existence before the issuance of the GDC in 10 CFR 50, Appendix A. Simply stated, PBNP GDC 11 requires that the facility shall be provided with a control room from which actions to maintain safe operational status can be controlled. Adequate radiation protection shall be provided to permit continuous occupancy of CR under any credible post-accident condition or as an alternative, access to other areas as necessary to shutdown and maintain safe control of the facility without excessive radiation exposures of personnel. Although this design criterion is applicable in many other areas, such as fire protection, HELB, security, etc., the focus of this section is solely on radiological habitability of the control room.

The control room ventilation system is designed to provide heating, ventilation, air conditioning, and radiological habitability for the control and computer rooms, both of which are within the control room envelope. For radiological habitability the system is capable of operating in four different modes providing for control room pressurization to limit inleakage; makeup and recirculation through HEPA and charcoal filters to remove contaminates; and recirculation without filtration or makeup. Design and system reviews stemming from the post-TMI initiatives demonstrate that the system is capable of meeting the dose limits of 10 CFR 50 Appendix A GDC-19 as required by NUREG-0737, Item III.D.3.4 while taking credit for potassium iodine (KI) to reduce the thyroid dose. The design factors affecting the system's ability to meet the above dose limits include: actuation on a containment isolation or high radiation signal, emergency filtration flow rate 4950 cfm ± 10%, maintaining a positive pressure ≥1/8 in. w.g. during Mode 4 operation, and meeting minimum filtration efficiencies specified in the test section for the HEPA and charcoal filters.

Due to the vintage of the plant design (i.e., 1960's), the control room HVAC system was designed and constructed similar to commercial applications (e.g., using ductwork construction with S-Slip and Drive joints). Since the original construction, modifications have been made to the control room envelope to improve its integrity and improve overall system reliability. In addition, the plant licensing basis allowed a control room habitability analysis that relies on the administration of the prophylactic KI to the operators to limit the potential dose to the thyroid. This analysis is not required to consider a loss of offsite power (LOOP) coincident with the limiting design basis accident (i.e., LOCA) for control room dose calculations. These issues were re-examined by the NRC during review of License Amendments 174 and 178. These amendments were approved on July 9, 1997 and contained a license condition referencing reliance on KI. (Reference 12) Upon further review, the NRC staff accepted the original licensing basis pertaining to control room habitability, as documented in USNRC letter to WE dated April 7, 2000. (Reference 7) The license condition regarding reliance on KI was subsequently eliminated in approved License Amendments 198 and 203 on August 15, 2000. (Reference 17)

6.2 Control Room Design and Ventilation System (VNCR) Description

The PBNP control room envelope is located in the control building within the turbine building approximately half way between Unit 1 and Unit 2. The control room envelope consists of the control room, the computer room, and each room's associated ductwork as it transitions through the mechanical equipment room. The cable spreading room on the 26' elevation (directly below the control room) and the mechanical equipment room on the 60' elevation (directly above the control room) are not part of the control room envelope. Figure 6.2-1 shows the relation of all four areas within the control building.

Two types of radiation monitors with control functions are located within the control room envelope: an area monitor and a process monitor. The area monitor (RE-101), located on the west wall of the control room, is a low-range gamma sensitive G-M tube detector assembly. The process monitor (RE-235), is a scintillation type detector, calibrated to Xe-133, and physically located on the control building roof. The sensing line penetrates the control room supply ductwork downstream of the control room HVAC filter unit. Because noble gases cannot be filtered via HEPA or charcoal, the monitor measurements are relatively unaffected by the filters. A "high" signal from either detector will automatically switch the control room ventilation system from the normal mode of operation to the emergency mode. The descriptions of these modes are given in the following discussion.

The control room ventilation system is designed for four modes of operation. Mode 1 is normal operation, Mode 2 is 100% recirculation, Mode 3 is 25% filtered return air / 75% recirculation, and Mode 4 is 25% filtered outside air / 75% recirculation. Because Modes 2 and 3 are not relied on for the accident analysis presented in this submittal, they will not be discussed further.

For Mode 1, one of the two normal supply/recirculation fans (W-13B1 or W-13B2) is started. The fan start opens the outside air damper VNCR-4849C to predetermined throttled position to supply approximately 1000 cfm of makeup air ducted from an intake penthouse located on the roof of the auxiliary building. The makeup air and return air from the control and computer rooms passes through roughing filter F-43 and cooling coils HX-100A & B before entering one of the normal recirculation fans. Room thermostats and/or humidistats control operation of the chilled water unit supplying the cooling coils. After leaving the normal recirculation fan, the filtered and cooled air passes through separate heating coils, HX-92 and HX-91A & B, and humidifiers, Z-78 and Z-77, to the computer and control rooms respectively. Room thermostats and humidistats also control the operation of the heating coils and humidifiers. Also operating in Mode 1 are computer room supplemental air conditioning unit W-107A/HX-190A/HX-191A or W-107B/HX-190B/HX-191B and control room washroom exhaust fan W-15.

Mode 4 is currently initiated by a high radiation signal from the control room area monitor RE-101, or a high radiation signal from noble gas monitor RE-235 located in the supply duct to the control room, or manually from panel C-67. While in Mode 4, the return air inlet damper VNCR-4851B to the emergency fans is closed and outside air supply damper VNCR-4851A opens. This allows approximately 4950 cfm of makeup air to pass through filter F-16 and the emergency fan to the suction of the normal recirculation fan, ensuring a positive pressure of ≥ 1/8 in. w.g. is maintained in the control and computer rooms to prevent inleakage. Modifications will be made to the CR HVAC actuation logic such that upon receipt of a containment isolation signal Mode 4 will be initiated from Mode 1.

In order to determine the limiting Mode 4 HVAC operation for each accident scenario, sensitivities were performed to determine whether the minimum or maximum fresh air inlet flow rate was bounding. As mentioned above, Mode 4 is designed to operate with approximately 4950 cfm of filtered outside air, therefore, analyses were performed assuming 4950 cfm ± 10% to calculate the bounding case. For all analyzed accidents, the lower flow rate, 4455 cfm, resulted in bounding dose consequence to the control room operator.[66]

In light of recent industry concerns with regard to control room habitability, initiatives are currently underway at PBNP to further increase system reliability, improve program implementation, gain safety margin, and increase the integrity of the control room HVAC system by tightening up the envelope to reduce the potential areas for unfiltered air infiltration. Modifications in progress are improving the system by the replacement of dampers on the periphery of the control room envelope (CRE) with bubble-tight dampers (extremely low-leakage dampers) and hardcasting the seams of portions of the CRE ductwork. The hardcasting is a sealant applied to the seams of the ductwork consisting of a fibrous material bonded with an epoxy-like adhesive material. The replacement of a number of the dampers, as well as the hardcasting of particular portions of the ductwork, require more time than allowed by Technical Specification 3.7.9. License Amendment Request 221, addressing this concern, was submitted on November 1, 2001 to the NRC for approval.

Other modifications completed to date include installation of a new balance damper and bubble tight isolation damper upstream of the cable spreading room outside air intake isolation, installation of a new bubble tight damper at the discharge of the control room washroom exhaust fan, installation of three new bubble tight dampers for the control room, computer room, and cable spreading room smoke and heat exhaust fan isolation, upgrades to the control room backup instrument air system, replacement of existing control room washroom exhaust fan with a direct drive fan and improved differential pressure indication between the control room and the turbine building (Figures 6.2-2 through 6.2-4).

6.3 Proposed Design Changes to the Control Room Envelope

Additional shielding modifications will be made to the control building in order to improve the integrity of the control room envelope by reducing the amount of dose to the operator from contained sources (i.e., containment and the CR HVAC emergency filter unit) and external cloud due to containment and the emergency core cooling system leakage. These modifications include additional shielding at the south door, east window, and work control center (WCC) outer walls located on the north end of the control room. In addition, shielding will be provided on the floor of the mechanical equipment room near the control room HVAC filter unit (located above the control room proper).

The CR HVAC actuation logic will be modified such that a containment isolation signal will place the control room ventilation system directly in emergency mode of operation (Mode 4), thereby, reducing the delay time for actuation. This modification will help reduce the dose to the operator for accidents that historically had relied on the RMS high radiation setpoint to switch the operating mode of the CR HVAC.

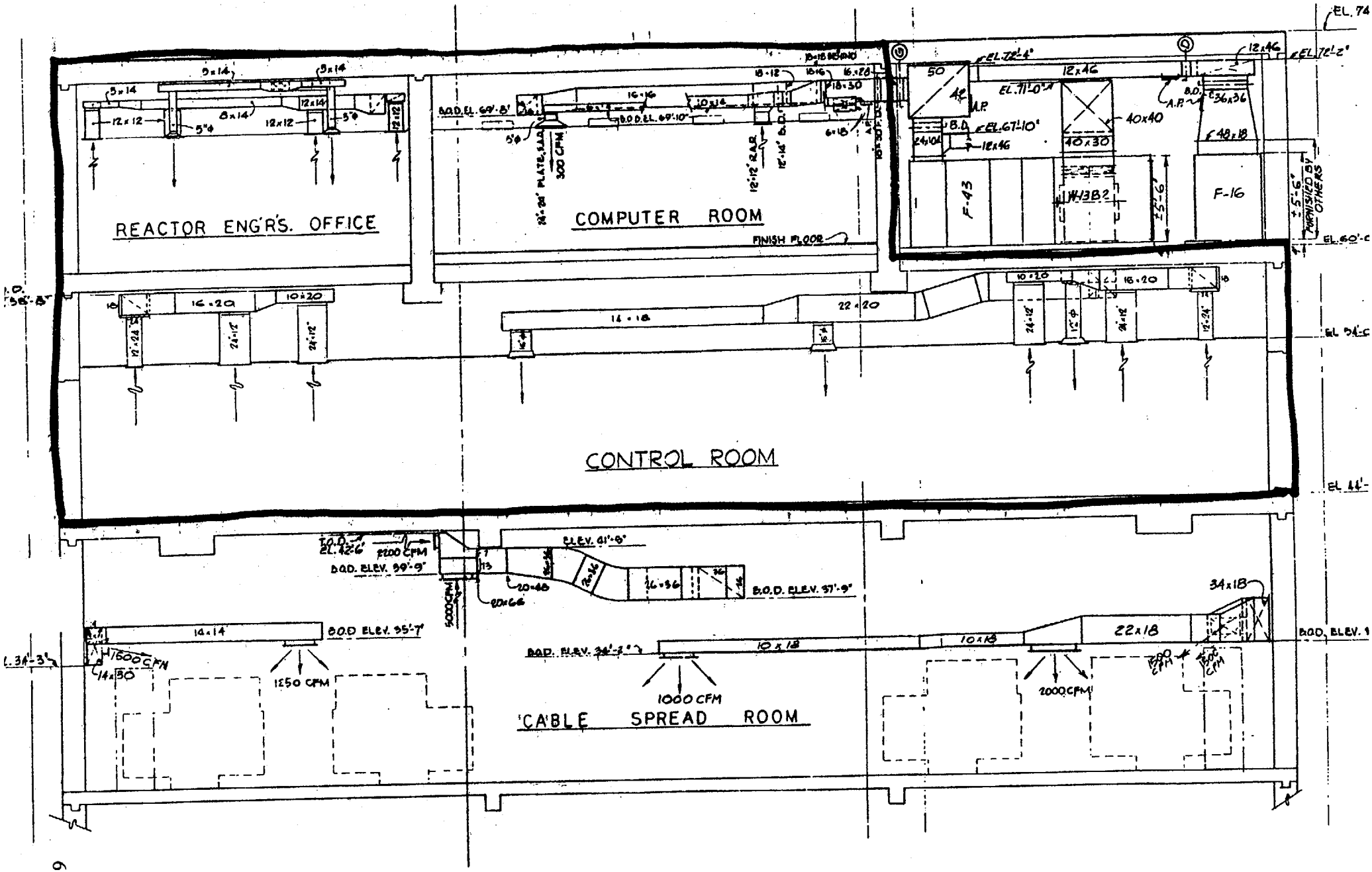

Bold line indicates areas included in the control room envelope.

Figure 6.2-1: Control Room Envelope

CONTROL ROOM VENTILATION OPERATING MODES

Current Configuration, including recent Phase 1 Modification

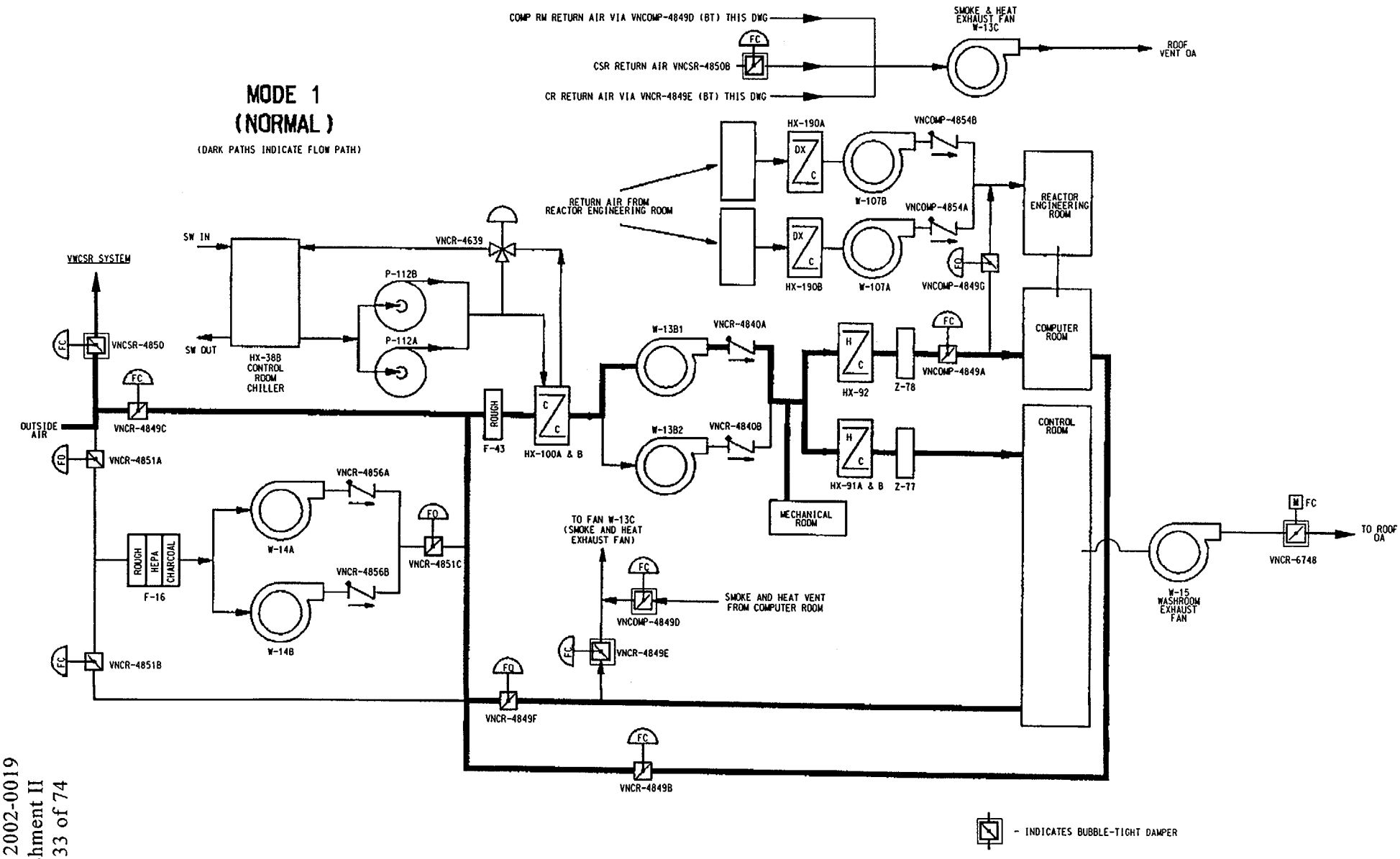

Figure 6.2-2: CR HVAC Normal Mode with Phase 1 Modifications

CONTROL ROOM VENTILATION OPERATING MODES

Current Configuration, including recent Phase 1 Modification

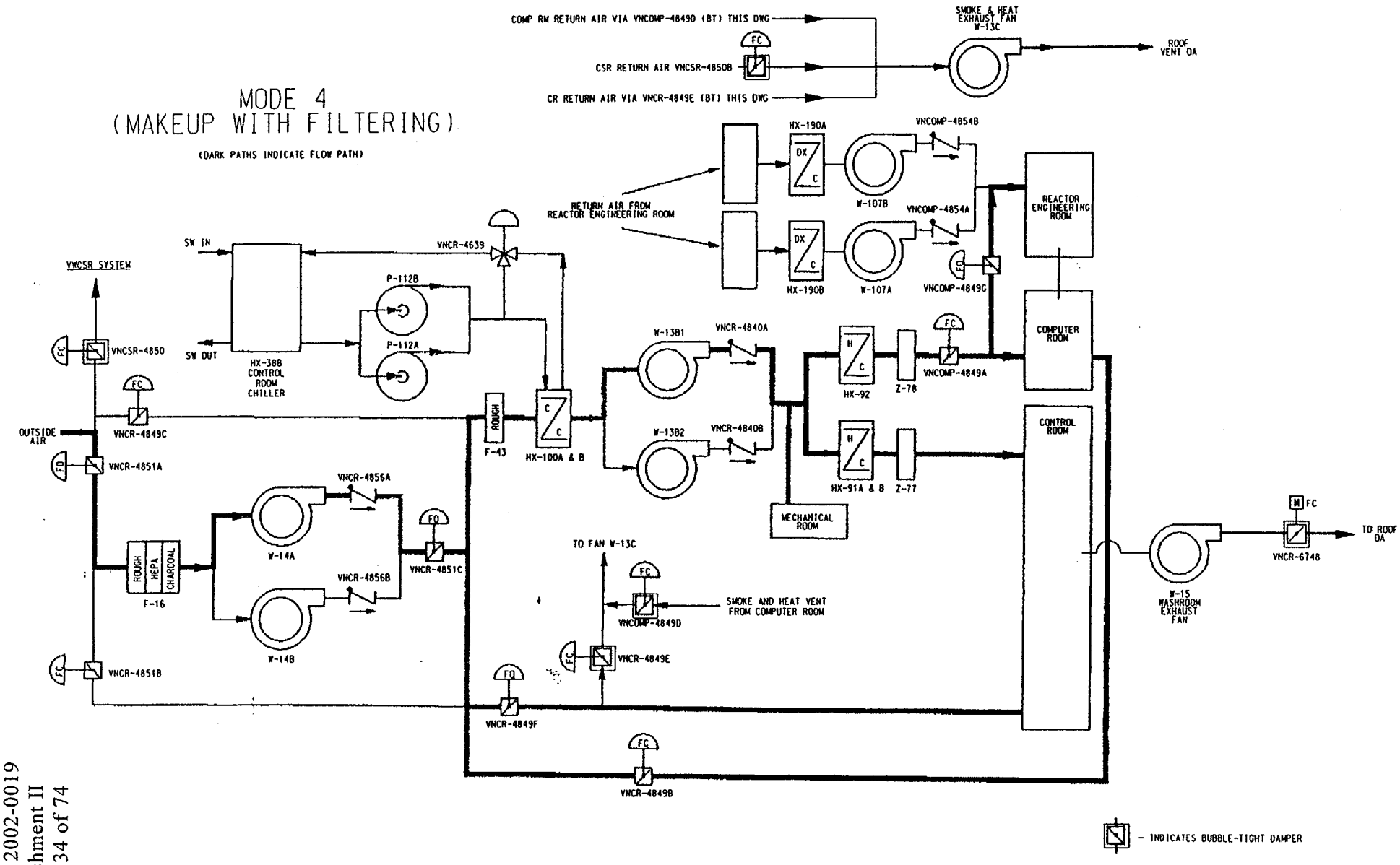

Figure 6.2-3: CR HVAC Emergency Mode with Phase 1 Modifications Complete

CONTROL ROOM VENTILATION OPERATING MODES

Future Configuration, after Phase 2 Damper Modification
(Pending NRC Approval of AOT Extension)

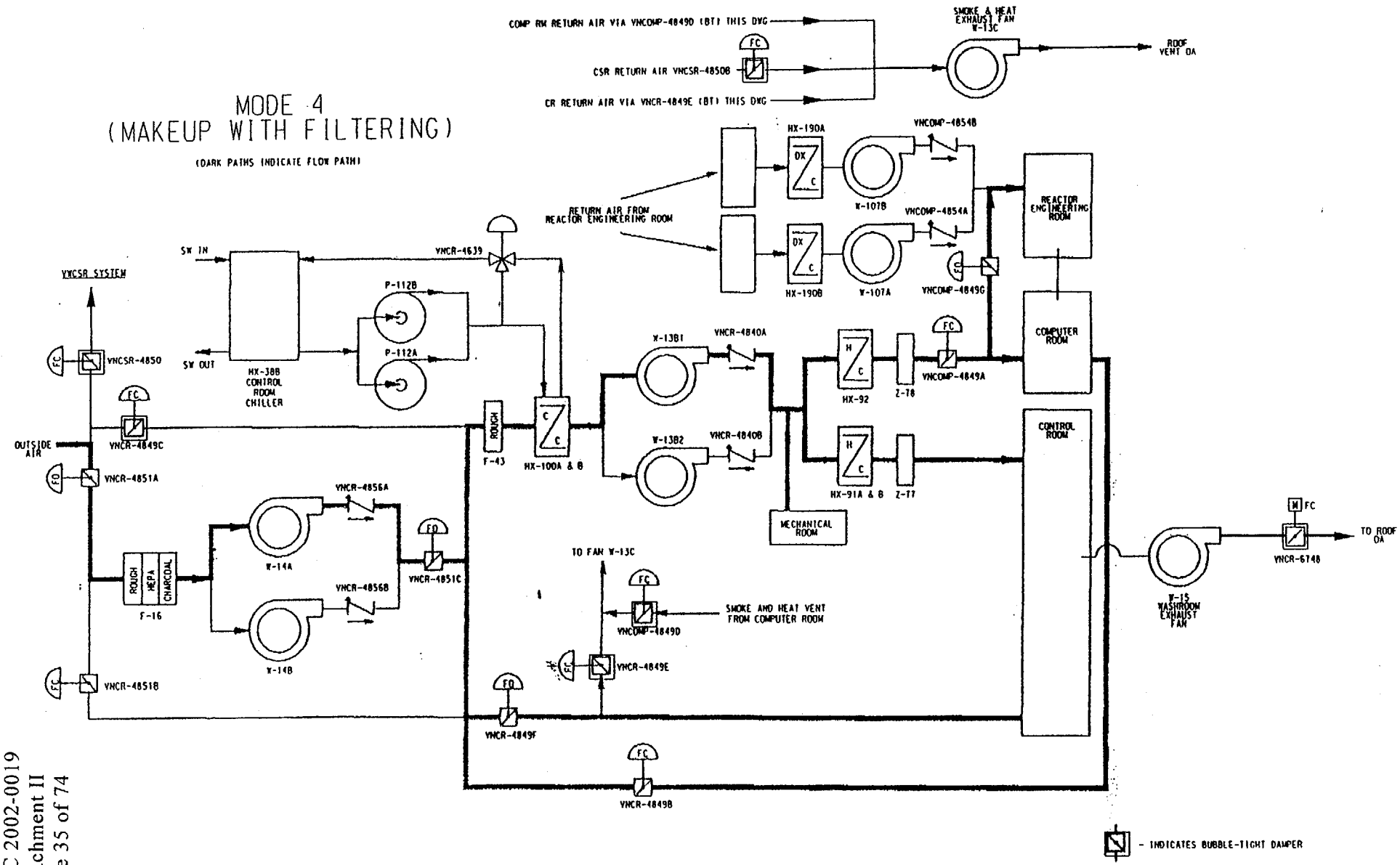

Figure 6.2-4: CR HVAC Emergency Mode with Phase 2 Modifications Complete

7.0 Radiological Accident Analyses

As discussed in Section 1, for a select number of accidents the methodology and scenarios used in the existing design basis accident analyses discussed in the PBNP FSAR are being updated to reflect the guidance provided in Regulatory Guide 1.183. These analyses also include revised control room atmospheric dispersion factors developed using ARCON96. The reanalysis of these accidents also is being performed to meet an NMC commitment to the NRC following the retraction of TSCR 204. The offsite (EAB and LPZ) and control room dose analyses for the following design basis accident have undergone a change in design basis as discussed above:

1. Loss of Coolant Flow (Locked Rotor)
2. Fuel Handling Accident
3. Steam Generator Tube Rupture
4. Rupture of a Steam Pipe (Main Steam Line Break)
5. Rupture of a Control Rod Mechanism Housing – RCCA Ejection
6. Loss of Coolant Accident

The worst 2-hour period dose at the EAB and the dose at the LPZ for the duration of the release are calculated for each of these events based on postulated airborne radioactivity releases. This represents the post accident dose to the public due to inhalation and submersion for each of these events. Due to distance from the plant and plant shielding, the dose contribution at the offsite locations due to direct shine from contained sources is considered negligible for all of the accidents.

The 0 to 30-day dose to an operator in control room due to airborne radioactivity releases is developed for all of the referenced design basis accidents except FHA. A 24-hour operator dose is calculated. This represents the post accident dose to the operator due to inhalation and submersion. The control room shielding design is based on the LOCA, which represents the worst case DBA relative to radioactivity releases. The direct shine dose due to contained sources and the external cloud is included in the control room doses reported for the LOCA. The LOCA direct shine and external cloud dose is bounding for all accidents.

All doses reported have been rounded up to the nearest 0.1 rem.

7.1 Locked Rotor Accident Doses

An instantaneous seizure of a reactor coolant pump rotor is assumed to occur which rapidly reduces flow through the affected reactor coolant loop. Fuel clad damage may be predicted to occur due to departure from nucleate boiling as a result of this accident. Due to the pressure differential between the primary and secondary systems and assumed steam generator tube leakage, fission products are discharged from the primary into the secondary system. A portion of this radioactivity is released to the outside atmosphere through either the atmospheric dump valves (ADV) or main steam safety valves (MSSV) In addition, a portion of the iodine activity contained in the secondary coolant before the accident is released to the atmosphere as a result of steaming from the steam generators following the accident.

Input Parameters and Assumptions

The analysis of the locked rotor radiological consequences uses the analytical methods and assumptions outlined in the RG 1.183, Appendix G. Input parameters and assumptions are provided in Table 7.1-1.

It is assumed that 100% of the fuel rods in the core suffer damage as a result of the locked rotor sufficient that all of their gap activity is released to the reactor coolant system. The gap fractions for specific nuclide groups are taken from RG 1.183 and listed in Table 7.1-1. The iodine activity concentration of the primary coolant at the time of the accident is assumed to be equivalent to the proposed Technical Specification 3.4.16 limit of 1.0 μCi/gm of DE I-131. The initial concentrations of noble gases and alkali metals in the reactor coolant are given in Table 4.2-1 and are based on 1% defective fuel, which corresponds to the Technical Specification 3.4.16 limit of 100/E-bar.

The iodine activity concentration of the secondary coolant at the time the locked rotor occurs is assumed to be equivalent to the proposed Technical Specification 3.7.13 limit of 0.1 μCi/gm of DE I-131 (see Table 4.2-2).

As discussed in section 3.2, the amount of primary to secondary SG tube leakage is assumed to be equal to the Technical Specification 3.4.13 limit of 0.7 gpm total (i.e., 500 gpd per SG). The density for this leakage is conservatively assumed to be 47 lb_m/ft^3.

In the intact SG, an iodine partition factor of 0.01 (Ci iodine/gm steam) / (Ci iodine/gm water) is used. Per RG 1.183, the retention of particulates in the SG is limited by moisture carry over; therefore, an alkali metal partition factor (Ci alkali metals/gm steam) / (Ci alkali metals/gm water) in the intact SG of 0.0025 is used. This value is representative of the estimated moisture carryover of the Unit 1 steam generators. The steam quality of the Unit 1 steam generators is 99.75%, based on a full power, non-uprated power level (i.e., 1518.5 MWt) and is bounding for both Units.

Because the accident analysis is performed for post-trip low power conditions, this value remains conservative for the uprated power (i.e., 1683 MWt). These partition factors are applied to the primary to secondary leakage present in the intact SG. All noble gas activity carried over to the secondary side through SG tube leakage is assumed to be immediately released to the outside atmosphere.

For PBNP, it was assumed that plant cooldown to residual heat removal (RHR) operating conditions can be accomplished within 24 hours after initiation of the locked rotor event. At 24 hours after the accident, the RHR System is assumed to be placed into service for heat removal and no further steam is released to the atmosphere from the secondary system. A primary and secondary side mass and energy balance was used to calculate the steam released from the steam generators from 0 to 2 hours, 2 to 8 hours, and 8 to 24 hours. The releases conservatively bound the uprated core power of 1683 MWt.

The limiting two-hour dose interval at the EAB was determined by performing calculations for various two-hour intervals out to 24 hours. The highest calculated dose is reported. The low population zone doses are calculated up to the time all releases are terminated, which is the Residual Heat Removal (RHR) cut in time assumed to be 24 hours. The control room doses are calculated for 30 days.

The locked rotor analysis assumes that KI is administered to the control room operators. Therefore, the CEDE thyroid dose due to inhalation of iodine is reduced by a factor of 10. See section 3.3 for a more in depth discussion of the application of dose reduction credit.

Control Room Isolation

The control room HVAC is switched to the post-accident mode after receiving a high radiation ventilation system line monitor signal. This signal is reached almost immediately, however a conservative time of 15 minutes was assumed to switch the control room to the post-accident mode.

Acceptance Criteria

The exclusion area boundary and low population zone dose acceptance criteria for a locked rotor is 2.5 rem TEDE per RG 1.183. This is 10% of the 10 CFR 50.67 limit. The control room dose acceptance criterion is 5.0 rem TEDE per 10 CFR 50.67.

Results and Conclusions

The locked rotor doses are:

Exclusion Area Boundary	2.2 rem TEDE
Low Population Zone	0.7 rem TEDE
Control Room	2.1 rem TEDE

The acceptance criteria are met.

The exclusion area boundary doses reported are for the worst 2-hour period, determined to be from 6 to 8 hours.

Table 7.1-1: Assumptions Used for Locked Rotor Radiological Dose Analysis

Primary Side	
Power Level	1683 MWt
RCS mass	1.07E8 gm
Equilibrium Core Activity	(See Table 4.2-1)
Fraction of Failed Fuel Rods	100% of core
Gap Fractions	
I-131	8% of core activity
Kr-85	10% of core activity
Other Iodine and Noble Gas nuclides	5% of core activity
Alkali Metals	12% of core activity
Iodine Chemical Form for Release	
Elemental	97%
Organic	3%
Particulate (cesium iodide)	0%
Initial RCS Activity	
Iodine	1.0 μCi/gm of DE I-131
Noble Gas	1.0% Fuel Defect Level
Alkali Metal	1.0% Fuel Defect Level
Secondary Side	
Initial Secondary Coolant Iodine Activity	0.1 μCi/gm of DE I-131
Primary to Secondary Leakage	0.70 gpm total
Leakage Density	47 lbm/ft^3
Steam Release to Environment	
0 – 2 hours	204,000 lbm
2 – 8 hours	443,000 lbm
> 8 hours	579,000 lbm
SG Iodine Water/Steam Partition Coefficient	0.01
Particulate Carry-over Fraction in SG	0.0025
Fraction of Noble Gas Released	1.0 (no hold-up)
Termination of Release	24 hours
Secondary Side Mass	3.19E7 gm/SG
Atmospheric Dispersion (χ/Q) Factors	
Control Room, Unit 2 Safeties:	
0 – 2 hours	3.75E-3 sec/m^3
2 – 8 hours	2.58E-3 sec/m^3
8 – 24 hours	9.28E-4 sec/m^3
24 – 96 hours	7.58E-4 sec/m^3
96 – 720 hours	6.91E-4 sec/m^3
Control Room Isolation: Signal/Timing	
High Ventilation Radiation (RE235)	15 min

7.2 Fuel Handling Accident (FHA) Doses

A fuel assembly is assumed to be dropped and damaged during refueling. Analysis of the accident is performed with assumptions selected such that the results are bounding for the accident occurring either inside containment or the spent fuel pool. The activity from the damaged assembly is released over two hours to the outside atmosphere taking no credit for hold-up or filtration. This section describes the assumptions and analyses performed to determine the amount of activity released and the resultant offsite and control room doses.

Input Parameters and Assumptions

The major assumptions and parameters used in the analysis are itemized in Table 7.2-1. This analysis involves dropping a recently discharged fuel assembly. All activity released from containment refueling cavity or the spent fuel pool to the atmosphere is assumed to last two hours.

No credit is taken for ventilation filtration system operation in the spent fuel area (i.e., drumming area vent stack). Likewise, no credit is taken for having the containment hatch closed and in place, having air lock doors capable of closure, nor is credit taken for containment purge supply and exhaust system closure capability or for filtration associated with the purge stack. Since the assumptions and parameters used to model the release due to a FHA inside containment are identical to those for a FHA in the spent fuel pool, except for different χ/Q values for the different release points, the activity released is the same regardless of the location of the accident. In order to bound the accident, the location with the highest χ/Q value was assumed. Therefore, the evaluation presented assumes the accident occurs in the Unit 2 containment building and the release is through the purge stack, resulting in a bounding analysis for a postulated accident in either location.

Consistent with RG 1.183 (Position 1.2 of Appendix B), the radionuclides considered for release are xenons, kryptons, halogens, cesiums, and rubidiums. The list of xenons, kryptons, and halogens considered is given in Table 7.2-1. These values are based on 1683 MWt core power. The alkali metals, cesium and rubidium, are not included because they are not assumed to be released from the pool. Per Regulatory Guide 1.183, Appendix B, the cesium and rubidium (particulate radionuclides) released from the damaged fuel rods are assumed to be retained by the water in the refueling cavity and would not be available for release.

The calculation of the radiological consequences following a FHA uses gap fractions of 8% for I-131, 10% for Kr-85 and 5% for all other noble gas and iodine nuclides.

As in the existing licensing basis, it is assumed that all of the fuel rods in the equivalent of one fuel assembly are damaged to the extent that all their gap activity is released. The assembly inventory is based on the assumption that the subject fuel assembly has been operated at the maximum radial peaking factor of 1.8 times the core average power. The

decay time used in the analysis is 65 hours, corresponding to the time of discharge from the core.

In accordance with RG 1.183, the iodine species in the pool is 99.85% elemental and 0.15% organic. This is based on the split leaving the fuel of 95% cesium iodide (CsI), 4.85% elemental iodine and 0.15% organic iodine. It assumed that all CsI instantaneously dissociates in the water and re-evolves as elemental. Thus, 99.85% of the iodine released is elemental.

TS 3.9.6, "Refueling Cavity Water Level," requires that a minimum of 23 ft. of water above the top of the reactor vessel flange shall be maintained. Similarly, TS 3.7.10, "Fuel Storage Pool Water Level," requires a minimum of 23 ft. of water over the top of the assemblies during movement of irradiated fuel assemblies. Therefore, the decontamination factor of 200 for iodine, as provided in RG 1.183, is used in the analysis modeling. Because 99.85% of the iodine is in the elemental form, an elemental DF of 285 is applied in order to achieve an overall DF of 200.

No credit is taken for removal of iodine by ventilation system filters nor is credit taken for isolation of release paths. The activity released from the pool is assumed to be released to the outside atmosphere over a 2-hour period. Since no filters or containment isolation is modeled, this analysis supports refueling operation with the equipment hatch or personnel air lock remaining open.

The exclusion area boundary doses are calculated for the worst 2-hour period. The low population zone doses are calculated for two hours. Control room doses are calculated for 24 hours. After 24 hours, no significant amounts of activity remain in the control room to contribute to the operator dose.

Control room operator dose was determined without taking credit for the administration of KI.

Control Room Isolation

It is assumed that the control room HVAC system is initially operating in normal mode. Post-accident the activity level in the intake duct would cause a high radiation signal almost immediately, which would actuate the emergency mode. However, it is conservatively assumed that the emergency HVAC mode is entered 10 minutes after event initiation based on the area monitor inside the control room reaching its high level setpoint.

Acceptance Criteria

The exclusion area boundary and low population zone dose acceptance criteria for a fuel handling accident is 6.3 rem TEDE per RG 1.183. This is approximately 25% of 10 CFR 50.67 limit. The control room dose acceptance criterion is 5.0 rem TEDE per 10 CFR 50.67.

Results and Conclusions

The fuel handling accident doses are:

Exclusion Area Boundary	1.6 rem TEDE
Low Population Zone	0.1 rem TEDE
Control Room	2.7 rem TEDE

The doses meet the acceptance criteria.

Table 7.2-1: Assumptions Used for FHA in Containment Dose Analysis

Core Power Level	1683 MWt
Radial peaking factor	1.8
Fuel damaged	1 assembly
Time from shutdown before fuel movement	65 hrs
Activity in the damaged fuel assembly	
I-131	3.00E+05 Ci
I-132	3.05E+05 Ci
I-133	8.87E+04 Ci
I-135	7.81E+02 Ci
Kr-85m	4.31E+00 Ci
Kr-85	4.50E+03 Ci
Kr-88	3.45E-02 Ci
Xe-131m	3.93E+03 Ci
Xe-133m	1.45E+04 Ci
Xe-133	6.17E+05 Ci
Xe-135m	1.25E+02 Ci
Xe-135	1.26E+04 Ci
Gap Fractions	
I-131	8% of core activity
Kr-85	10% of core activity
Other Iodine and Noble Gas	5% of core activity
Water depth	23 feet
Overall pool iodine scrubbing factor	200
Noble Gas scrubbing factor	1.0
Particulate scrubbing factor	Infinite
Filter Efficiency	No filtration assumed
Isolation of Release	No isolation assumed
Time to Release All Activity	2 hrs
Atmospheric Dispersion Factors (χ/Q)	
Control Room, 0 – 2 hours	
Unit 2 Purge Stack	5.51E-03 sec/m^3
Control Room Isolation: Actuation Signal/Timing	
High Radiation (RE-101)	10 min

7.3 Steam Generator Tube Rupture Radiological Consequences

The evaluation of the radiological consequences of a steam generator tube rupture (SGTR) assumes that the reactor has been operating at the Technical Specification limits for primary coolant activity and primary to secondary leakage for sufficient time to establish equilibrium concentrations of radionuclides in the reactor coolant and in the secondary coolant. Due to a postulated double-ended tube rupture, a reactor trip occurs approximately 2.46 minutes after the break. A loss of offsite power is assumed in order to lose cooldown capability of the condenser as well as maximizing the steam releases to the environment. The break flow with elevated iodine concentrations (pre-accident or concurrent iodine spike) flows to the ruptured steam generator and the associated activities are release to the environment via secondary side steam releases. Prior to the reactor trip, the activities are released from the condenser air ejector via the auxiliary building vent stack. However, the atmospheric dispersion factors of this release point are bounded by that of the MSSVs/ADVs. Consequently, the dose analyses effectively assume that all of the steam is discharged via the MSSVs/ADVs by applying this release point's atmospheric dispersion factors.

Input Parameters and Assumptions

Since there is no postulated fuel damage associated with this accident for PBNP, the main radiation source is the activity in the primary coolant, which is available for release to the environment through the break flow and primary to secondary leakage. The loss of offsite power is used in the thermal-hydraulic analysis to maximize break flow and steam release though the ruptured steam generator MSSV/ADV. Two scenarios are considered which concern the concentration changes in the primary coolant: pre-accident iodine spike and accident initiated iodine spike.

a. Pre-Accident Spike - A reactor transient has occurred prior to the SGTR and has raised the primary coolant iodine concentration from the proposed Technical Specification 3.4.16 limit of 1.0 μCi/gm to 60 μCi/gm of DE I-131.

b. Accident-Initiated Spike - The primary coolant iodine concentration is initially at the proposed Technical Specification 3.4.16 limit of 1.0 μCi/gm of DE I-131. Following the primary system depressurization due to the tube rupture, an iodine spike is initiated in the primary system. This spike increases the iodine release rate from the fuel to the coolant to a value 335 times greater than the release rate corresponding to the primary system equilibrium iodine appearance rate. This release rate is calculated to match the rate of iodine removal from the RCS, which is the combination of decay, leakage and cleanup. The accident initiated iodine spike model, conservatively assumes maximum RCS letdown flow of 132 gpm (maximum letdown flow of 120 gpm plus 10% uncertainty), maximum allowable RCS leakage of 11 gpm (i.e., 10 gpm identified and 1 gpm unidentified) and an infinite clean-up efficiency of the letdown flow. The accident-initiated spike assumes to persist for 8 hours from the start of the event.

For both accident scenarios, the following is assumed. The initial concentration of noble gases in the reactor coolant is based on 1% defective fuel, which corresponds to the Technical Specification 3.4.16 limit of 100/E-bar. The initial primary coolant alkali metal concentration is based on 1% defective fuel.

The initial secondary coolant iodine concentration is the proposed Technical Specification 3.7.13 limit of 0.1 μCi/gm DE I-131. The chemical form of iodine released from the steam generators is assumed to 97% elemental and 3% organic. No noble gases are present in the secondary system at the start of the event.

A summary of the input parameters and assumptions is provided in Table 7.3-1.

Ruptured Steam Generator Release

A postulated SGTR at PBNP will result in a large amount of primary coolant being released to the ruptured stream generator via the ruptured tube with a significant proportion of break flow flashed to the steam space. All of the noble gas in the break flow is assumed to be instantly transferred out of the SG. Only the portion of iodine and alkali metal assumed in the flashed flow are instantly released. The iodine and alkali metals in the non-flashed portion of the break flow immediately mixes uniformly with the steam generator liquid mass and is assumed to become airborne in proportion to the steaming rate and partition factor. An iodine partition factor in the SG of 0.01 representing (Ci iodine/gm steam) / (Ci iodine/gm water) is used per Regulatory Guide 1.183. An alkali metal partition factor in the SG of 0.0025 representing (Ci alkali metals/gm steam) / (Ci alkali metals/gm water) is used. This value is representative of the estimated moisture carryover of the Unit 1 steam generators, which is higher than the value for Unit 2. The steam quality of the Unit 1 steam generators is 99.75%, based on a full power, non-uprated power level. However, the accident analysis is performed for post-trip low power conditions so this value remains conservative for the uprated power (i.e., 1683 MWt).

Break flow, flashing break flow, and steam releases from the ruptured steam generator are modeled using the limiting conditions. These factors are determined by a hand-calculation methodology that does not use a transient temperature calculation. Therefore, two distinct time intervals are employed in this methodology: pre- and post-reactor trip (assuming safety injection (SI) initiation occurs concurrently with reactor trip). The amount of break flow that flashes to steam is conservatively calculated assuming that all break flow is from the hot leg side of the break and that the primary temperatures remain constant. These flow rates are conservatively calculated independent of the time the SI setpoint is reached.

The highest possible pre-trip flashing fraction is based on a hot leg temperature of 605.5°F and initial RCS pressure of 2250 psia and initial secondary pressure of 640 psia. The highest post-trip flashing fraction is based on a hot leg temperature of 605.5°F, RCS pressure of 1536.7 psia, and steam generator pressure of 926.1 psia. It is conservatively assumed that the hot leg temperature is not reduced for the 30 minutes in which break flow is calculated. However, with a hot leg temperature of 605.5°F and RCS pressure of 1536.7 psia, the RCS fluid is superheated; therefore, the post-trip RCS fluid is modeled as a saturated liquid at 1536.7 psia with a corresponding hot leg temperature of 599.4°F since this is the minimum amount of cooling that would keep the RCS saturated. Based on these conditions described, the pre-trip flashing fraction is 0.1953 and the post-trip flashing fraction is 0.1285.

Before the reactor trip at 2.46 min, the activity in the steam is released to the environment from the condenser air ejector via the auxiliary building vent stack. All noble gases and organic iodine are released directly to the environment. Only a portion of the elemental iodine carried with the steam is partitioned to the air and released to the environment. The rest is partitioned to the condensate, returned to both steam generators and assumed to be available for future steaming release. The condenser is assumed to have a partition factor of 100 (i.e., (Ci of iodine/gm water) / (Ci of iodine / gm steam)).

After the reactor trip, the break flow continues until the primary system is fully depressurized. No credit is taken for the condenser, since, to maximize the dose, a loss of offsite power is assumed to occur simultaneously with the reactor trip; therefore, the steam is released from the MSSVS/ADVs. All activity releases from the ruptured steam generator cease when it is isolated at 30 min after the accident.

Intact Steam Generator Release

The activity available for release from the intact steam generator is due to the normal primary to secondary leakage. The activity is released to the environment via steaming. All of the iodine activity in the referenced leakage is assumed to mix uniformly with the steam generator liquid and released in proportion to the steaming rate and the partition factor. The iodine and alkali metals activity present in primary to secondary leakage to the intact steam generator is subject to the partitioning in the steam space under pre- and post-trip conditions. An iodine partition factor in the intact SG of 0.01 (Ci iodine/gm steam) / (Ci iodine/gm water) is used. Per RG 1.183, the retention of particulates in the SG is limited by moisture carry over; therefore, an alkali metal partition factor in the SGs of 0.0025 (Ci alkali metals/gm steam) / (Ci alkali metals/gm water) is used. The reactor coolant noble gases that enter the intact steam generator are released directly to the environment without holdup.

A total primary to secondary leak rate is assumed to be at the Technical Specification 3.4.13 limit of 0.7 gpm (500 gpd per steam generator). The leak is assumed to be distributed with 0.35 gpm to the intact steam generator and 0.35 gpm to the ruptured steam generator. The leakage to the intact steam generator is assumed to persist for the duration of the accident. Because the calculated primary to secondary leak rate is corrected for operating temperature and pressure, the density for this leakage is conservatively assumed to be 47 lb_m/ft^3, based on an operating temperature of 552 °F and pressure of 2300 psia (see section 3.2).

Before the reactor trip at 2.46 minutes, the main steam is release from the air ejector/condenser. A condenser iodine partition factor of 0.01 is assumed. After reactor trip and loss of offsite power, flow to the condenser is isolated. Therefore, after the reactor trip, the steam is released from the MSSVs/ADVs. The steam release from the intact steam generator continues until initiation of shutdown cooling 24 hours after the event.

The dose at the EAB is to be determined for the worst two-hour interval. The release was the greatest during the 0-2 hour interval for both SGTR scenarios. This is evident because the ruptured generator releases start and end during this interval. The LPZ doses are calculated up to the time all releases are terminated, which is the RHR cut in time (24 hours) used in the thermal and hydraulic analysis. The control room doses are calculated for 30 days.

No credit for the administration of KI to the control room operators is taken for either postulated SGTR scenario.

Control Room Isolation

The control room HVAC begins in normal mode. Once the safety injection/containment isolation (SI/CI) actuation setpoint is reached at 147.7 seconds, and after a conservative delay of 60 seconds, the control room HVAC is switched to the post-accident mode where is it assumed to remain throughout the event. The allowable range for emergency filter fan flow in the emergency mode is ± 10% design flow in accordance with Point Beach Technical Specifications. The radiological analysis account for this variation using the flow rate (either maximum or minimum) that results in the highest calculated dose in the control room. Based on the results of sensitivity analyses performed for the steam generator tube rupture accident, the doses were calculated using the minimum flow rate.

Acceptance Criteria

The doses at the EAB and the LPZ for an SGTR with an assumed pre-accident iodine spike must be within the RG 1.183 acceptance criterion of 25 rem TEDE. The doses at the EAB and the LPZ for an SGTR with an assumed accident-initiated iodine spike must be within the RG 1.183 acceptance criterion of 2.5 rem TEDE. The doses in the control room must be less than the 10 CFR 50.67 dose limit of 5 rem TEDE for both scenarios.

Results and Conclusions

The pre-accident iodine spike doses are:

Exclusion Area Boundary	2.0 rem TEDE
Low Population Zone	0.2 rem TEDE
Control Room	2.2 rem TEDE

The accident initiated iodine spike doses are:

Exclusion Area Boundary	1.2 rem TEDE
Low Population Zone	0.1 rem TEDE
Control Room	1.3 rem TEDE

The acceptance criteria are met.

The exclusion area boundary dose reported is for the worst 2-hour period, determined to be from 0 to 2 hours.

Table 7.3-1: Input Assumptions for the PBNP SGTR Dose Analysis

Reactor Coolant System Initial Activity	
Core Power Level	1683 MWt
Pre-Accident Iodine Spike	1.0 μCi/gm of DE I-131
Accident-Initiated Iodine Spike	60 μCi/gm of DE I-131
Noble Gas Activity	1% fuel defect level
Alkali Metal Activity	1% fuel defect level
Secondary system initial activity	
Iodine	0.1 μCi/gm of DE I-131
Noble Gas	No holdup
Reactor Coolant Initial Mass	1.07×10^8 grams
Steam Generator Initial Mass (each)	3.19×10^7 grams
Offsite power	Lost at time of reactor trip
Primary-to-secondary leakage duration for intact SG	24 hours
Species of Iodine	
Elemental	97%
Organic	3%
Particulate (cesium iodide)	0%
Ruptured Steam Generator	
Pre-Trip 0 - 2.46 minutes	
Tube Rupture Break Flow	26,165 lbm
Flashing Fraction	19.53%
Post-Trip 2.46 - 30 minutes	
Tube Rupture Break Flow	97,435 lbm
Flashing Fraction	12.85%
Steam Release 0 - 30 minutes	74,000 lbm
Iodine partition factor for rupture flow	
Non-flashed	100
Flashed	0.01
Intact Steam Generator	
Steam Release 0 - 2 hours	232,600 lbm
Steam Release 2 - 24 hours	1,373,000 lbm
Primary-to-secondary leakage	0.35 gpm
Condenser Iodine Partition Factor	0.01
Control Room Atmospheric Dispersion Factors:	
0 – 2 hours	3.75E-03
2 – 8 hours	2.58E-03
8 – 24 hours	9.28E-04
24 – 96 hours	7.58E-04
96 – 720 hours	6.91E-04
Control Room Isolation: Signal/Timing	
Containment Isolation Signal	2.46 min
Mode Actuation Complete	3.46 min (plus 1 min delay)

7.4 Main Steam Line Break Doses

The complete severance of a main steam line outside containment is assumed to occur. The affected steam generator (SG) will rapidly depressurize and release radioiodines initially contained in the secondary coolant and primary coolant activity transferred via SG tube leaks directly to the outside atmosphere. From the intact SG, a portion of the initial iodine activity and all noble gas activity due to tube leakage is released to the atmosphere through either the atmospheric dump valves (ADV) or the main steam safety valves (MSSVs). The steam line break outside containment will bound any break inside containment since the outside break provides a means for direct release to the environment. This section describes the assumptions and analyses performed to determine the amount of radioactivity released and the offsite and control room doses resulting from this release.

Input Parameters and Assumptions

The analysis of the main steam line break (MSLB) radiological consequences uses the analytical methods and assumptions outlined in the RG 1.183, Appendix E. A summary of input parameters and assumptions is provided in Table 7.4-1.

For the MSLB, two scenarios are evaluated: a pre-accident iodine spike and an accident initiated spike.

a. Pre-accident iodine spike – it is assumed the plant is operating with 1% fuel defects and a reactor transient has occurred prior to the MSLB which raised the RCS iodine concentration from the proposed Technical Specification 3.4.16 value of 1.0 μCi/gm to 60 μCi/gm of DE I-131.

b. Accident-initiated iodine spike scenario – it is assumed the reactor trip associated with the MSLB creates an iodine spike in the RCS which increases the iodine release rate from the fuel to the RCS to a value 500 times greater than the release rate corresponding to the proposed maximum equilibrium RCS concentration of 1.0 μCi/gm of DE I-131. (See Section 7.3, SGTR, for discussion on the development for equilibrium appearance rate.) The duration of the accident-initiated iodine spike is assumed to be 8 hours.

The noble gas activity concentration in the RCS at the time the accident occurs is based on a 1% fuel defect level and is approximately equal to the Technical Specification 3.4.16 value of 100/E-bar μCi/gm for gross radioactivity. The alkali metal concentration in the RCS at the time the accident occurs is based on a 1% fuel defect level. The iodine activity concentration of the secondary coolant at the time the MSLB occurs is assumed to be equivalent to the proposed Technical Specification 3.7.13 value of 0.1 μCi/gm of DE I-131.

The amount of primary to secondary SG tube leakage is assumed to be equal to the Technical Specification 3.4.13 limit for 0.7 gpm total (500 gpd per SG). The leak is assumed to be distributed with 0.35 gpm to the intact steam generator and 0.35 gpm to the

faulted steam generator. As discussed in Section 3.2, the density for this leakage is assumed to be 47 lb_m/ft^3.

The SG connected to the broken steam line is assumed to boil dry within the initial two minutes following the MSLB. The entire liquid inventory of this SG is assumed to be steamed off and all of the iodine initially in this SG is released to the environment. In addition, iodine carried over to the faulted SG by tube leaks is assumed to be released directly to the environment with no credit taken for iodine retention in the SG.

In the intact SG, an iodine partition factor of 0.01 (Ci iodine/gm steam) per (Ci iodine/gm water) is used. Per RG 1.183, the retention of particulates in the SG is limited by moisture carry over; therefore, an alkali metal partition factor in the intact SG of 0.0025 (Ci alkali metals/gm steam) / (Ci alkali metals/gm water) is used. This represents the lowest steam quality. These partition factors are applied to the primary to secondary leakage present in the intact SG. This value is representative of the estimated moisture carryover of the Unit 1 steam generators, which is higher than the value for Unit 2. The steam quality of the Unit 1 steam generators is 99.75%, based on a full power, non-uprated power level. However, the accident analysis is performed for post-trip low power conditions so this value remains conservative for the uprated power (i.e., 1683 MWt).

All noble gas activity carried over to the secondary side through SG tube leakage in the intact and faulted SGs is assumed to be immediately released to the outside atmosphere.

For PBNP, it was assumed that plant cooldown to RHR operating conditions is accomplished within 24 hours after initiation of the steam line break event. At this time, the RHR System is assumed to be placed into service for heat removal and no further steam is released to the atmosphere from the intact steam generator. A primary and secondary side mass and energy balance was used to calculate the steam released from the intact steam generator from 0 to 2 hours, 2 to 8 hours, and 8 to 24 hours. The releases conservatively bound the uprated core power of 1683 MWt including uncertainties

Within 80 hours after the accident, the reactor coolant system is assumed to be cooled to below 212°F, and no further steam is released to atmosphere from the faulted steam generator due to primary to secondary leakage.

The MSLB analysis assumes that KI is administered to the control room operators. Therefore, the CEDE thyroid dose due to inhalation of iodine is reduced by a factor of 10. See section 3.3 for a more in depth discussion of the application of dose reduction credit.

The dose at the EAB is calculated for the worst 2-hour period. For the pre-existing iodine spike, the worst two-hour interval for the EAB is 0 – 2 hours. This is evident from the fact that the dose is dominated by the releases from the faulted-loop steam generator release path and as time continues, the source term for this pathway will decrease. For the accident initiated spike, the primary coolant activity level will continue to increase as well as the release rate to the environment until the spike stops at 8 hours. Thus the worst two-hour interval for the EAB is expected to be from 6.0 – 8.0 hours. These intervals were confirmed from the TITAN-V runs.

Control Room Isolation

In the event of a MSLB, the steamline pressure SI setpoint will be reached shortly after event initiation. Proposed modifications to the control room HVAC actuation logic would cause the control room HVAC system to switch from normal mode (Mode 1) to emergency mode (Mode 4) on the receipt of an SI or CI (containment isolation). Although, these signals would cause the control room HVAC to switch from the normal operation mode to the post-accident mode of operation, this analysis conservatively did not credit the SI signal but relied on the ventilation system line radiation monitor signal for control room isolation at 45 seconds post-accident plus a 30 second delay to accomplish the switch in HVAC modes.

Acceptance Criteria

The offsite dose limit for a MSLB with a pre-accident iodine spike is 25 rem TEDE per RG 1.183. This is the guideline value of 10 CFR 50.67. For a MSLB with an accident-initiated iodine spike, the offsite dose limit is 2.5 rem TEDE per RG 1.183. This is 10% of the guideline value of 10 CFR 50.67. The limit for the control room dose is 5.0 rem TEDE per 10 CFR 50.67.

Results and Conclusions

The MSLB accident doses are listed below.

For the pre-accident iodine spike:

Exclusion Area Boundary	0.3 rem TEDE
Low Population Zone	0.04 rem TEDE
Control Room	0.3 rem TEDE

For the accident-initiated iodine spike:

Exclusion Area Boundary	0.9 rem TEDE
Low Population Zone	0.4 rem TEDE
Control Room	3.2 rem TEDE

The acceptance criteria are met.

The exclusion area boundary doses reported for the worst 2-hour period was determined to be from 0.0 to 2.0 hours for the pre-accident iodine spike and from 6.0 – 8.0 hours for the accident-initiated iodine spike.

Table 7.4-1: Assumptions Used for Main Steam Line Break Dose Analysis

Core Power Level	1683 MWt
RCS Mass	235,395 lbm
Reactor Coolant Initial Activity	
Pre-Accident Iodine Spike	60 μCi/gm of DE I-131
Accident-Initiated Iodine Spike	1.0 μCi/gm of DE I-131
Noble Gas Activity	1.0% Fuel Defect Level
Alkali Metal Activity	1.0% Fuel Defect Level
Gap Fractions	
I-131	8% of Core Activity
Kr-85	10% of Core Activity
Other Iodine and Noble Gas nuclides	5% of Core Activity
Alkali Metals	12% of Core Activity
Accident-Initiated Iodine spike Appearance Rate	500 Times Equilibrium Rate
Duration of Accident-Initiated Iodine Spike	8 hrs
SG Primary to Secondary Leak Rate per SG	0.35 gpm
Intact SG Mass	70,335 lbm
Faulted Secondary SG Side Mass	125,627 lbm
Secondary Coolant Initial Activity	
Iodine	0.1 μCi /gm of DE I-131
Noble Gas	No Holdup
Steam Releases from Intact SG	
0 – 2 hours	213,000 lbm
2 – 8 hours	413,000 lbm
8 – 24 hours	579,000 lbm
Steam Release from Faulted SG (0 – 2 minutes)	125,627 lbm
Iodine Chemical form after Release to Atmosphere	
Elemental	97%
Organic	3%
Particulate (cesium iodide)	0%
SG Iodine Water/Steam Partition Coefficient	
Faulted SG	1
Intact SGs	0.01
SG Alkali Metal Water/Steam Partition Coefficient	
Intact SGs	0.0025
Time to Cool RCS Below 212°F	80 hrs

Table 7.4-1: Assumptions Used for Main Steam Line Break Dose Analysis (continued)

Control Room Dispersion Factors: Intact SG	
Unit 2 B Safeties	
0 – 2 hrs	3.75E-03
2 – 8 hrs	2.58E-03
8 – 24 hrs	9.28E-04
1 – 4 days	7.58E-04
4 – 30 days	6.91E-04
Control Room Dispersion Factors: Faulted SG	
Unit 2 A Safeties	
0 – 2 hrs	1.73E-02
2 – 8 hrs	1.24E-02
8 – 24 hrs	4.27E-03
1 – 4 days	3.66E-03
4 – 30 days	3.11E-03
Control Room Isolation: Signal / Timing	
Ventilation Radiation Monitor	1 min 15 sec

7.5 Rod Ejection Accident Doses

It is assumed that a mechanical failure of a control rod mechanism pressure housing has occurred, resulting in the ejection of a rod cluster control assembly and drive shaft. As a result of the accident, some fuel clad damage and a small amount of fuel melt are assumed to occur. Due to the pressure differential between the primary and secondary systems, radioactive reactor coolant is discharged from the primary into the secondary system. A portion of this radioactivity is released to the outside atmosphere through either the atmospheric dump valves or the main steam safety valves. Iodine activities contained in the secondary coolant prior to the accident are released to the atmosphere as a result of steaming of the steam generators following the accident. Finally, radioactive reactor coolant is discharged to the containment via the spill from the opening in the reactor vessel head. A portion of this radioactivity is released through containment leakage to the environment.

Input Parameters and Assumptions

The analysis of the rod ejection radiological consequences uses the analytical methods and assumptions outlined in RG 1.183, Appendix H. Input parameters and assumptions are provided in Table 7.5-1.

In determining the offsite doses following a rod ejection accident, it is assumed that 15% of the fuel rods in the core suffer sufficient damage as a result of departure from nuclear boiling (DNB) and all of their gap activity is released. This assumed percentage for breached fuel is conservative for Westinghouse fuel (Reference 6). It is assumed that 0.375% of the activity in the core is released as a result of partial melting of the fuel in rods in DNB. This is based on the assumption that 50% of the rods in DNB undergo centerline melting, with the melting limited too the inner 10% and occurring over 50% of the axial length (i.e., 0.15*0.5*0.1*0.5*100 = 0.375%). Ten percent of the total core activity of iodine and noble gases and 12% of the total core activity for alkali metals are assumed to be in the fuel-cladding gap. Consistent with RG 1.183, the activity releases from the failed/melted fuel based on the Table 4.1-1 core average activities were multiplied by the maximum radial peaking factor of 1.8.

For both the containment leakage release path and the primary to secondary leakage release path, all noble gas and alkali metal activity contained in the failed fuel gap and in the melted fuel is available for release.

For the containment leakage release path all of the iodine activity contained in the failed fuel gap and 25% of the iodine activity contained in the melted fuel is available for release.

For the primary to secondary leakage release path all of the iodine activity contained in the failed fuel gap and 50% of the iodine activity contained in the melted fuel is available for release from the reactor coolant system.

Prior to the accident, the iodine activity concentration of the primary coolant is the at proposed Technical Specification 3.4.16 limit of 1.0 μCi/gm of DE I-131, given in Table 4.2-2. The noble gas and alkali metal activity concentration in the RCS at the time the accident occurs is based on a 1% fuel defect level and is given in Table 4.2-1. This is approximately equal to the Technical Specification (TS 3.4.16) value of 100/E-bar μCi/gm for gross radioactivity. The iodine activity concentration of the secondary coolant at the time the rod ejection occurs is assumed to be equivalent to the proposed Technical Specification 3.7.13 limit of 0.1 μCi/gm of DE I-131 (see table 4.2-2).

Iodine in containment is assumed to be 4.85% elemental, 0.15% organic and 95% particulate. Iodine released from the secondary system is assumed to be 97% elemental and 3% organic.

The containment is assumed to leak at the proposed Technical Specification 1.1 leak rate of 0.2-weight percent per day for the first 24 hours of the accident and then to leak at half that rate (0.1-percent per day) for the remainder of the 30-day period following the accident considered in the analysis.

For the containment leakage pathway, no credit is taken for plateout onto containment surfaces or for containment spray operation, which would remove airborne particulates and elemental iodine. Sedimentation of alkali metal particulates in containment is credited. A removal coefficient of 0.1 hr^{-1} is assumed and is credited for the first 48 hours. This corresponds to a decontamination factor of less than 150. Based on the Containment Systems Experiments (CSE), which examined the air cleanup experienced through natural transport processes, it was found that a large fraction of the aerosols were deposited on the floor rather than on the walls indicating that sedimentation was the dominant removal process for the test. (Reference 15) The CSE tests determined that there was a significant sedimentation removal rate even with a relatively low aerosol concentration. From CSE, even at an air concentration of 10 $\mu g/m^3$, the sedimentation removal coefficient was above 0.3 hr^{-1}.

When determining doses due to the primary to secondary steam generator tube leakage, all the iodine, alkali metals and noble gas activity (from prior to the accident and resulting from the accident) is assumed to be in the primary coolant (and not in the containment). The primary to secondary tube leakage continues until the reactor coolant system pressure drops below the secondary pressure. The rod ejection pressure transient is similar to that of a small break LOCA. Therefore, a conservative time of 0.417 hours was used for this analysis because analyses of the small break LOCA pressure transient have shown that the primary pressure is less than the secondary pressure before this time. Steam releases from the steam generators are conservatively assumed to continue for 24 hours. The locked rotor steam releases are conservatively applied for this analysis. The locked rotor releases are conservative since they do not include ECCS injection to absorb decay heat.

The amount of primary to secondary SG tube leakage is assumed to be equal to the Technical Specification 3.4.13 limit of 0.7 gpm total (i.e., 500 gpd per SG). The density of the leakage is assumed to be 47 lbm/ft^3. The basis for this value is discussed in Section 3.2.

An iodine partition factor in the SGs of 0.01 (Ci iodine/gm steam) / (Ci iodine/gm water) and an alkali metal partition factor in the SGs of 0.0025 (Ci alkali metals/gm steam) per (Ci alkali metals/gm water) is applied to the primary to secondary leakage.

All noble gas activity carried over to the secondary side through SG tube leakage is assumed to be immediately released to the outside atmosphere.

The dose exposures resulting from activity released through these pathways are summed together to provide the total dose exposure at a given location, i.e., EAB, LPZ, and control room. The dose at the EAB is determined for the worst two-hour interval. The limiting interval for the containment leakage and initial secondary activity is the first two hours since all activity is available for release at the start of the accident. As the accident progresses the release rate is reduced over time. For the primary to secondary leakage, the limiting 2-hour interval is 0.417 – 2.417 hours, when the primary to secondary leakage has been stopped and the secondary concentration is at its maximum. However, because all release paths are summed, the initial two-hour interval is limiting. The low population zone and control room doses are calculated for 30 days.

The control rod eject analysis assumes that KI is administered to the control room operators. Therefore, the CEDE thyroid dose due to inhalation of iodine is reduced by a factor of 10. See section 3.3 for a more in depth discussion of the application of dose reduction credit.

Control Room Isolation

In the event of a rod ejection, the low pressurizer pressure SI setpoint will be reached within 2 minutes after event initiation. A radiation monitor signal will cause the control room HVAC to switch from the normal operation mode to the emergency mode of operation. Although, with proposed CR HVAC actuation logic modifications in place, the containment isolation (CI) signal would cause the control room much sooner, the analysis conservatively did not credit the CI signal but relied on the radiation monitor signal for control room isolation, which adds a delay in the actuation. The radiation monitor setpoint is conservatively assumed to be reached within 4 minutes. Therefore, the control room HVAC switches from normal operation to emergency mode of operation at 5 minutes (4 minutes for radiation signal plus a conservative 60-second delay time).

Acceptance Criteria

The exclusion area boundary and low population zone dose acceptance criteria for a rod ejection is 6.3 rem TEDE per RG 1.183. This is approximately 25% of the 10 CFR 50.67 limit. The control room dose acceptance criterion is 5.0 rem TEDE per 10 CFR 50.67.

Results and Conclusions

The rod ejection doses are:

Exclusion Area Boundary	3.0 rem TEDE
Low Population Zone	1.0 rem TEDE
Control Room	1.4 rem TEDE

The acceptance criteria are met.

The exclusion area boundary doses reported are for the worst 2-hour period, determined to be from 0 to 2 hours.

Table 7.5-1: Assumptions Used for Rod Ejection Dose Analysis

Core Activity	See Table 4.1-1
Fraction of fuel rods in core that fail	15% of core
Gap Fractions	
Iodine	10% of core activity
Noble Gas	10% of core activity
Alkali Metals	12% of core activity
Fraction of fuel melting	0.375% of core
Radial peaking factor	1.8
Fraction of activity released from failed fuel gap	
Containment leakage	100%
Primary to Secondary leakage	100%
Fraction of activity released from melted fuel	
Containment leakage	
Iodine	25%
Noble Gas	100%
Alkali Metals	100%
Primary to Secondary leakage	
Iodine	50%
Noble Gas	100%
Alkali Metals	100%
Initial Reactor Coolant Activity	
Iodine	1.0 μCi/gm of DE I-131
Noble Gas	1.0% Fuel Defect Level
Alkali Metal	1.0% Fuel Defect Level
Initial Secondary Coolant Iodine Activity	0.1 μCi/gm of DE I-131
Containment Leakage Release Path	
Containment net free volume	1.0E+06 ft^3
Containment leak rates	
0 – 24 hours	0.2 weight %/day
> 24 hours	0.1 weight %/day
Iodine Chemical Form in Containment	
Elemental	4.85%
Organic	0.15%
Particulate (cesium iodide)	95%
Spray Removal in Containment	Not Credited
Sedimentation Removal in Containment	
Iodine	Not Credited
Alkali metals	0.1 hr^{-1}

Table 7.5-1: Assumptions Used for Rod Ejection Dose Analysis (continued)

Primary to Secondary Leakage Release Path	
Primary to Secondary Leakage	0.7 gpm total
Steam release to environment	
0 – 2 hours	204,000 lbm
2 – 8 hours	443,000 lbm
>8 hours	579,000 lbm
SG Iodine Water/Steam Partition Coefficient	0.01
SG Alkali Metal Water/Steam Partition Coefficient	0.0025
Iodine Atmosphere Chemical Form	
Elemental	97%
Organic	3%
Particulate (cesium iodide)	0%
RCS Mass	1.07E8 gm
Intact SG Mass	3.19E7 gm
Atmospheric Dispersion (χ/Q) Factors	
Control Room, Containment Surface:	
0 – 2 hours	1.34E-3 (sec/m^3)
2 – 8 hours	1.02E-3 (sec/m^3)
8 – 24 hours	3.88E-4 (sec/m^3)
24 – 96 hours	3.04E-4 (sec/m^3)
96 – 720 hours	2.33E-4 (sec/m^3)
Atmospheric Dispersion (χ/Q) Factors	
Control Room, Unit 2 Safeties:	
0 – 2 hours	3.75E-3 (sec/m^3)
2 – 8 hours	2.58E-3 (sec/m^3)
8 – 24 hours	9.28E-4 (sec/m^3)
24 – 96 hours	7.58E-4 (sec/m^3)
96 – 720 hours	6.91E-4 (sec/m^3)
Control Room Isolation: Signal / Timing	
Radiation Monitor Signal	5 min

7.6 Loss of Coolant Accident (LOCA)

Radiological consequences due to a LOCA are due to a postulated abrupt failure of the main reactor coolant pipe where the emergency core cooling features fail to prevent the core from experiencing significant degradation (i.e., melting). Activity from the core is released to the containment then released to the environment by means of containment leakage and emergency core cooling system (ECCS) leakage.

Input Parameters and Assumptions

The input parameters and assumptions are listed in Table 7.6-4. Activity is released from the fuel into the containment using the timing and release fractions from Table 7.6-2 and Table 7.6-3. The analysis considers the release of activity from the containment via containment leakage. In addition, once the recirculation mode of the (ECCS) is established, activity in the sump solution may be released to the environment by means of leakage from ECCS equipment into the auxiliary building. No credit for auxiliary building vent stack filtration is taken.

The offsite and control room doses are the sum of the doses resulting from each of the postulated release paths. The EAB dose is reported for the worst 2-hour period. This is determined by calculating the dose during various intervals. The doses to the LPZ and control room are reported for the duration of the accident (i.e., 30 days). The LOCA analysis assumes that KI is administered to the control room operators. Therefore, the CEDE thyroid dose due to inhalation of iodine is reduced by a factor of 10. See section 3.3 for a more in depth discussion of the application of dose reduction credit.

The following sections address topics of significant interest.

Source Term

The release of the reactor coolant activity is not explicitly modeled, because the activity in the coolant (see Table 4.2-1) is insignificant when compared to the release from the core; therefore, it is not included in the analysis.

The use of RG 1.183 source term modeling results in several major departures from the assumptions used in the existing LOCA dose analysis as reported in the PBNP FSAR. Instead of assuming instantaneous melting of the core and release of activity to the containment, the release of activity from the core occurs over a 1.8 hour interval. The gap release phase occurs in the first half hour and the release from the melted fuel occurs over the next 1.3 hours.

Instead of considering only the release of iodines and noble gases, a wide spectrum of nuclides is taken into consideration. Table 7.6-2 and Table 7.6-3 provide the fission product release fractions and the timing/duration of releases to the containment as provided in RG 1.183.

Instead of the iodine being primarily in the elemental form, the iodine is mainly in the particulate form of cesium iodide (CsI). The iodine characterization from RG 1.183 is listed in Table 7.6-1.

For the containment leakage analysis, all activity released from the fuel is assumed to be in the containment atmosphere until removed by sprays, sedimentation, radioactive decay or leakage from the containment. For the ECCS leakage analysis, all iodine activity released from the fuel is assumed to be in the sump solution until removed by radioactive decay or leakage from the ECCS.

Containment Modeling

The containment building is modeled as two discrete volumes: sprayed and unsprayed. The volumes are conservatively assumed to be mixed only by the containment fan coolers. The containment volume is 1.0E6 ft^3 with a sprayed fraction of 55% of the total (5.50E5 ft^3).

The containment is assumed to leak at the proposed Technical Specification 1.1 leak rate of 0.2 weight percent per day for the first 24 hours of the accident and then to leak at half that rate (0.1 weight percent per day) for the remainder of the 30-day period following the accident considered in the analysis.

Removal of Activity from the Containment Atmosphere

The reduction of activity available for release to the environment depends on the chemical form. The removal of elemental iodine from the containment atmosphere is accomplished only by containment sprays and radioactive decay. The removal of particulates from the containment atmosphere is accomplished by containment sprays, sedimentation and radioactive decay. The noble gases and the organic iodine are subject to removal only by radioactive decay.

During the injection phase following the LOCA, one train of the containment spray system is assumed to operate. When the RWST drains to a predetermined level, the operators switch to recirculation of the sump liquid, which provides a source to continue spray operation during the recirculation phase. An injection spray duration of 1.47 hr min. is assumed. During the following 20 minutes, the analysis does not credit any spray removal in the containment. Recirculation spray is assumed to begin at 1.8 hrs from the onset of the accident (20 minutes after the injection spray phase has ended). When recirculation phase containment spray is initiated, it is done so near the end of the early in-vessel release phase, i.e., a point in the event when the containment activity is the highest. In addition, delaying the recirculation spray until 1.8 hours is conservative since the spray flow rate is higher than the injection phase flow rate and provides better removal. The analysis assumed that the recirculation sprays operate for a 4-hour duration.

PBNP was originally designed to allow for operation of the containment spray system in the containment sump recirculation phase. However, the current radiological accident analyses do not take credit for this phase for accident mitigation. To credit containment spray operation during sump recirculation, additional analysis will be performed on the containment spray piping to evaluate its conformance to all code requirements and to determine if any remedial modifications are necessary. This analysis will be completed prior to implementation of the proposed amendment. Because of the possibility that some modifications can only be performed during unit outages, they may not be completed prior to implementation of this proposed amendment. Upon completion of the analysis, NMC will inform the NRC separately regarding the schedule of any required modifications that may be deemed necessary.

Containment Spray Removal of Elemental Iodine

The Standard Review Plan (Reference 14) identifies a methodology for the determination of spray removal of elemental iodine independent of the use of spray additive. The removal rate constant is determined by:

$$\lambda_s = 6K_gTF / VD$$

where:

K_g = gas phase mass transfer coefficient, ft/min
T = time of fall of the spray drops, min
F = volume flow rate of sprays, ft^3/hr
V = containment sprayed volume, ft^3
D = mass-mean diameter of the spray drops, ft

The upper limit of the removal rate was specified as 20 hr^{-1} for this model. Parameters for PBNP are listed below and were chosen to bound the current plant configuration:

Injection phase	Recirculation phase
K_g = 9.84 ft/min	K_g = 9.84 ft/min
T = 6.26 sec	T = 6.08 sec
F = 1111 gpm	F = 1400 gpm
V = 5.50E5 ft^3	V = 5.50E5 ft^3
D = 0.113 cm	D = 0.117 cm

These parameters and the appropriate conversion factors are used to calculate the elemental spray removal coefficients. The calculated elemental spray removal coefficients are higher than the upper limit of 20 hr^{-1}; therefore the upper limit of 20 hr^{-1} is conservatively used. When sprays are operating in the recirculation phase the elemental removal coefficient is reduced to 10 hr^{-1} to address the loading of the recirculating solution with elemental iodine.

Removal of elemental iodine from the containment atmosphere is assumed to be terminated when the airborne inventory drops to 0.5% of the total elemental iodine released to the containment (this is equivalent to a decontamination factor or DF of 200).

With the RG 1.183 source term methodology, this is interpreted as being 0.5% of the total inventory of elemental iodine that is released to the containment atmosphere over the duration of gap and in-vessel release phases. In the analysis, this occurs at 2.84 hours.

Containment Spray Removal of Particulates

Particulate spray removal is determined using the model described in Reference 13. The first order spray removal rate constant for particulates may be written as follows:

$\lambda_p = 3hFE / 2Vd$

where:

h = drop fall height, ft
F = spray flow rate, ft^3/hr
V = volume sprayed, ft^3
E = single drop collection efficiency
d = drop diameter, ft

Parameters for PBNP are listed below and were chosen to bound the current plant configuration:

Injection Phase	Recirculation Phase
h = 65.58 ft	h = 65.58 ft
F = 1111 gpm	F = 1400 gpm
V = 5.50E5 ft^3	V = 5.50E5 ft^3

The E/d term depends upon the particle size distribution and spray drop size. From the SRP (Reference 13 it is conservative to use 10 m^{-1} (3.05 ft^{-1}) for E/d until the point is reached when the inventory in the atmosphere is reduced to 2% of its original amount (DF of 50) at which time it is reduced to 1.0 m^{-1}. With the RG 1.183 source term methodology this is interpreted as being 2% of the total inventory of particulate iodine that is released to the containment atmosphere over the duration of gap and in-vessel release phases.

These parameters and the appropriate conversion factors were used to calculate the particulate spray removal coefficients. Conservative particulate removal coefficients used in the analysis are listed in Table 7.6-4. When the airborne inventory drops to 2% of the total particulate iodine released to the containment (this is a DF of 50) this removal coefficient is reduced by a factor of 10. In the analysis this occurs at 2.91 hours.

Sedimentation Removal of Particulates

During spray operation, credit is taken for sedimentation removal of particulates in the unsprayed region. After sprays are terminated (and during the 20 minute switchover from injection to recirculation when sprays are not credited), credit for sedimentation is taken in both the sprayed and unsprayed regions.

Based on the Containment Systems Experiments (CSE), which examined the air cleanup experienced through natural transport processes, it was found that a large fraction of the aerosols were deposited on the floor rather than on the walls indicating that sedimentation was the dominant removal process for the test. (Reference 14) The CSE tests determined that there was a significant sedimentation removal rate even with a relatively low aerosol concentration. From CSE, even at an air concentration of 10 $\mu g/m^3$, the sedimentation removal coefficient was above 0.3 hr^{-1}. With 2.0% of particulates remaining airborne at the end of the credited spray removal period, there would be more than 10,000 $\mu g/m^3$ and an even higher sedimentation rate would be expected. As noted above, the DF of 50 occurs at 2.91 hr. For the analysis, the sedimentation removal coefficient is conservatively assumed to be only 0.1 hr^{-1}. It is also conservatively assumed that sedimentation removal does not continue beyond a DF of 1000.

ECCS Leakage

When ECCS recirculation is established following the LOCA, leakage is assumed to occur from ECCS equipment outside containment. This leakage goes into the auxiliary building and released to the environment with no filtration credited for this release path. The earliest time recirculation for core injection would start is 20 min; however, the analysis conservatively assumes ECCS leakage begins at the onset of the accident, (i.e., t = 0). The leakage is assumed to continue for the 30-day period following the accident.

In accordance with RG 1.183 (Position 5.1 of Appendix A), it is assumed that the iodine is instantaneously and homogeneously mixed in the primary containment sump water at the time of release from the core.

The total ECCS recirculation leakage into the auxiliary building modeled in the analysis is 800 cc/min (i.e., 0.2113 gpm), which is twice the allowable leakage value per the PBNP Containment Leakage Rate Testing Program (CLRT). Per Technical Specification 3.6, "Containment Systems," the leakage rate testing is to be performed in accordance with the CLRT. Administrative limits are defined and managed within this program. The assumed value of 800 cc/min total ECCS leakage outside the containment is double the allowable leakage and therefore, consistent with RG 1.183 guidance. Ten-percent of the iodine in the leakage is assumed to become airborne.

Control Room Direct Shine Dose Due to External Cloud and Contained Sources

The dose contribution in the control room due to direct shine from the external cloud and from contained sources is addressed. The external cloud contribution includes containment leakage and ECCS leakage. The contained sources include shine from the containment structure and the control room HVAC filter. The source term used to calculate the dose components was generated by the Stone & Webster QA Category 1 PERC2 software. The 30-day deep dose equivalent (DDE) to a control room operator due to the airborne source in containment, the passing plume source, and the control room filter source is calculated by the QA Category 1 Stone & Webster point kernel computer code SW-QADCGGP. The integrated dose is calculated as a function of distance from the south door and north door openings and from the filter source.

The analysis takes credit for shielding modifications at the south door, east window, and work control center (WCC) outer walls located on the north end of the control room. In addition, it is assumed that shielding is provided on the floor of the mechanical equipment room near the control room HVAC filter unit (located above the control room proper).

The containment shine source includes all the airborne source above the operating floor of the 66' Elevation. This volume includes the volume in the cylindrical section and the volume in the spherical-toroidal dome. The total volume is modeled as an equivalent cylindrical source. Only the major intervening shielding is included in the QAD model (e.g., the containment liner/wall, control room walls and ceiling, etc.). For the south control room door location, a Unit 1 LOCA is assumed and the additional shielding is in place. For the north control room door location, a Unit 2 LOCA is assumed and the QAD model includes the additional shielding of the WCC windows.

The external plume is assumed to be uniformly distributed source from the 26' Elevation to approximately 1000 meters above the ground. The plume source is divided into two parts to assess the dose due to the south and north door locations of the control room. A Unit 1 LOCA is assumed for the south door and a Unit 2 LOCA is assumed for the north. Similar to the direct shine contribution, only the major intervening shielding is included in the QAD model (e.g., control room walls and ceiling, turbine building floors etc.).

The control room HVAC filter shine dose is calculated on the elemental, organic and particulate iodine releases from containment; however, only the elemental and organic forms of iodine are considered to be part of the ECCS leakage source term. The ECCS release path assumes that the particulate form of iodine remains in the water. Although the present control room emergency mode is filtered outside air with unfiltered recirculation, the filter shine dose is based on the control room HVAC operating in a mode that allows for filtered recirculation; therefore, maximizing the loading of the filter for the duration of the accident.

All doses are conservatively calculated at 10 ft. from the control room doors and 10 ft. horizontal distance from the control room HVAC filter. The external cloud and contained source doses are listed in the Results and Conclusions section below.

Control Room Isolation

In the event of a large break LOCA, SI/CI setpoint will be reached shortly after event initiation. The CI signal causes the control room heating, ventilation and air conditioning (HVAC) to switch from the normal operation mode to the post-accident mode of operation. It is assumed that the CI setpoint is reached immediately at the start of the event and a conservative 60-second delay time for switching from normal to post-accident operating mode (recirculation with filtered fresh air intake) is modeled.

Acceptance Criteria

The EAB and LPZ dose acceptance criteria for a LOCA is 25 rem TEDE per RG 1.183. This is the 10 CFR 50.67 limit. The acceptance criterion for the control room dose is 5.0 rem TEDE per 10 CFR 50.67.

The exclusion area boundary doses are calculated for the worst 2 hours. The low population zone and control room doses are calculated for 30 days.

Results and Conclusions

The large break LOCA doses are:

Exclusion Area Boundary	13.0 rem TEDE
Low Population Zone	2.0 rem TEDE
Control Room – All Pathways	3.5 rem TEDE
Control Room Dose – Pathway Specific	
Internal Control Room Cloud	3.2 rem TEDE
External Passing Plume	0.2 rem DDE
Containment Direct Shine	0.00002 rem DDE
CREFS Filter	0.08 rem DDE

The acceptance criteria are met.

The exclusion area boundary dose reported is for the worst 2-hour period, determined to be from 0.6 hours to 2.6 hours.

Table 7.6-1: Iodine Chemical Species

Iodine Form	Percentage (RG 1.183)
Elemental	4.85%
Organic	0.15%
Particulate	95%

Table 7.6-2: Fission Product Release Timing

Release Phase	Duration (RG 1.183)
Coolant Activity	10 to 30 seconds
Gap Activity	0.5 hour
Early In-vessel	1.3 hour

Note: Releases are sequential with the exception of the ex-vessel and the late in-vessel phases which both being at the end of the early in-vessel release phase.

Table 7.6-3: Core Fission Product Release Fractions

	Gap Release	Early In-Vessel
Noble gases	0.05	0.95
Halogens	0.05	0.35
Alkali Metals	0.05	0.25
Tellurium group	0	0.05
Barium, Strontium	0	0.02
Noble Metals (Ruthenium group)	0	0.0025
Cerium group	0	0.0005
Lanthanides	0	0.0002

Table 7.6-4: Assumptions Used for Large Break LOCA Dose Analysis

Core Activity	See Table 4.1-1
Activity release fractions and timing	See Table 7.6-2 & Table 7.6-3
Iodine Chemical Form in Containment	
Elemental	4.85%
Organic (methyl)	0.15%
Particulate (cesium iodide)	95%
Containment Net Free Volume	1.0E6 ft^3
Containment Sprayed Volume	5.5E5 ft^3
Fan Cooler Units	
Number in Operation	2
Flow Rate (per Unit)	33,500 cfm
Containment Leak Rates	
0 – 24 hours	0.2 weight %/day
> 24 hours	0.1 weight %/day
Spray Operation	
Time to Initiate Injection Sprays	90 seconds (0.025 hours)
Time that Injection Sprays are Terminated	1.47 hours
Delay Time to Switchover to Recirculation Sprays	20 minutes (0.33 hours)
Recirculation Spray Duration	4 hours
Spray Flow Rates	
Injection	1,111 gpm
Recirculation	1,400 gpm
Spray Fall Height	65.58 ft
Containment Spray Removal Coefficients	
Spray Elemental Iodine Removal	
Injection	20 hr^{-1}
Recirculation	10 hr^{-1}
Spray Particulate Removal	
Injection	4.86 hr^{-1}
Recirculation	6.12 hr^{-1}
Sedimentation particulate removal[1]	0.1
Containment Sump Volume	243,000 gal
ECCS Leakage Rate	800 cc/min
Control Room Isolation: Signal / Timing	
Containment Isolation	0 sec
Completion of Mode 4 Actuation	60 sec

[1] (Unsprayed region: from start of event, Sprayed region: when sprays are not assumed to be operating)

8.0 Summary of Results: Offsite and Control Room Doses and Acceptance Criteria

Accident	EAB (rem)	LPZ (rem)	Offsite Dose Criteria (rem)	CR [1] (rem)	CR Dose Criteria (rem)
Locked Rotor	2.2	0.7	2.5	2.1	5
Fuel Handling Accident	1.6	0.1	6.3	2.7	5
SGTR Pre-Accident Spike	2.0	0.2	25	2.2	5
SGTR Accident Initiated Spike	1.2	0.1	2.5	1.3	5
MSLB Pre-Accident Spike	0.3	0.04	25	0.3	5
MSLB Accident Initiated Spike	0.9	0.4	2.5	3.2	5
Control Rod Eject	3.0	1.0	6.3	1.4	5
Loss of Coolant Accident	13.0	2.0	25	3.5	5

[1] SGTR and FHA do not credit the administration of KI to the control room operator. All other accidents take credit for KI, which reduces the dose to the thyroid due to the inhalation of iodine by a factor of 10.

9.0 Conclusion

It has been demonstrated that the application of the alternate source term methodology to the above design basis accidents results in acceptable doses. From these analyses, LOCA is demonstrated to be the bounding design basis accident for PBNP.

10.0 References

1 USNRC, "Alternative Source Terms for Evaluating Design Basis Accidents at Nuclear Power Reactors," Regulatory Guide 1.183, July 2000.

2 10 CFR 50.67, "Accident Source Term."

3 TID-14844, "Calculation of Distance Factors for Power and Test Reactor Sites," U.S. AEC, Division of Licensing and Regulation, J. J. DiNunno, et. al, March 23, 1962.

4 USEPA, "Limiting values of Radionuclide Intake and Air Concentration and Dose Conversion Factors for Inhalation Submersion, and Ingestion," Federal Guidance Report No. 11, September 1988.

5 USEPA, "External Exposure to Radionuclides in Air, Water, and Soil," Federal Guidance Report No. 12, September 1993.

6 WCAP-7588, Rev. 1-A, "An Evaluation of the Rod Ejection Accident in Westinghouse Pressurized Water Reactors Using Spatial Kinetics Methods," January 1975.

7 USNRC letter to M. Sellmen, WE, " Point Beach Nuclear Plants, Units 1 and 2 – Discussion of Amendments Pertaining to Control Room Habitability (TAC Nos. MA1082 and MA1083)," April 7, 2000.

8 ANS Standard ANSI/ANS-18.11984, "Radioactive Source Term for Normal Operation of Light Water Reactors," approved December 31, 1984.

9 J.V. Ramsdell, "ARCON96: Atmospheric Diffusion for Control Room Habitability Assessments," NUREG/CR-5055, USNRC, May 1997.

10 USNRC, "Atmospheric Dispersion Models for Potential Accident Consequence Assessments at Nuclear Power Plants," Regulatory Guide 1.145, Revision 1, November 1982.

11 USNRC, "Atmospheric Relative Concentrations for Control Room Radiological Habitability Assessments at Nuclear Power Plants," Draft Regulatory Guide DG-1111, December 2001.

12 USNRC Letter to R. Grigg, WE, "PBNP Unit Nos. 1 and 2 – Issuance of Amendments Regarding Technical Specification Changes for Revised System Requirements to Ensure Post-Accident Containment Cooling Capability (TAC Nos. M96741 and M96742)," July 9, 1997, Amendment Nos. 174/178.

13 NUREG-0800, Standard Review Plan 6.5.2, "Containment Spray as a Fission Product Cleanup System," Revision 2, December 1988.

14 Industry Degraded Core Rulemaking (IDCOR) Program Technical Report 11.3, "Fission Product Transport in Degraded Core Accidents," Atomic Industrial Forum, December 1983.

15 K.G. Murphy and K.M. Campe, "Nuclear Power Plant Control Room ventilation System Design for Meeting General Criterion 19," 13th AEC Air Cleaning Conference, August 1974.

16 USNRC letter to C.W. Fay, WEPCO, "RE: NUREG-0737 Item III.D.3.4- Control Room Habitability At Point Beach Nuclear Plant Units 1 and 2," August 10, 1982.

17 USNRC letter to Michael B. Sellman, NMC, " Point Beach Nuclear Plants, Units 1 and 2 – Issuance of Amendments RE: Control Room Habitability (TAC Nos. MA9042 and MA9043)," August 15, 2000.

LIST OF REGULATORY COMMITMENTS

The following is a list of regulatory commitments committed to by NMC in this submittal. Any other statements in this submittal are provided for information purposes and are not considered to be regulatory commitments.

1. NMC will perform facility modifications as necessary to provide a level of shielding to the control room commensurate with the proposed dose analysis assumptions. These modifications will be completed prior to implementation of the approved amendment.

2. NMC will modify the CR HVAC system actuation logic such that a containment isolation signal will initiate mode 4 (emergency) CREFS operation. This modification will be completed prior to implementation of the approved amendment.

3. NMC will perform evaluations of the containment spray system piping to verify that it conforms to applicable code requirements. This analysis will be completed prior to implementation of the approved amendment. NMC will inform the NRC separately regarding the schedule of any required modifications that may be deemed necessary as a result of the analysis.

PROPOSED TECHNICAL SPECIFICATION CHANGES

(additions are double-underlined; deletions are strikethrough)

1.1 Definitions

L_a	The maximum allowable primary containment leakage rate, L_a, shall be ~~0.4~~ 0.2% of primary containment air weight per day at the peak design containment pressure (P_a).
LEAKAGE	LEAKAGE shall be: a. Identified LEAKAGE 1. LEAKAGE, such as that from pump seals or valve packing (except reactor coolant pump (RCP) seal water injection or leakoff), that is captured and conducted to collection systems or a sump or collecting tank; 2. LEAKAGE into the containment atmosphere from sources that are both specifically located and known either not to interfere with the operation of leakage detection systems or not to be pressure boundary LEAKAGE; or 3. Reactor Coolant System (RCS) LEAKAGE through a steam generator (SG) to the Secondary System; b. Unidentified LEAKAGE All LEAKAGE (except RCP seal water injection or leakoff) that is not identified LEAKAGE; c. Pressure Boundary LEAKAGE LEAKAGE (except SG LEAKAGE) through a nonisolable fault in an RCS component body, pipe wall, or vessel wall.
MASTER RELAY TEST	A MASTER RELAY TEST shall consist of energizing all master relays in the channel required for OPERABILITY and verifying the OPERABILITY of each required master relay. The MASTER RELAY TEST shall include a continuity check of each associated required slave relay. The MASTER RELAY TEST may be performed by means of any series of sequential, overlapping, or total channel steps.

3.3 INSTRUMENTATION

3.3.5 Control Room Emergency Filtration System (CREFS) Actuation Instrumentation

LCO 3.3.5 The CREFS actuation instrumentation for each Function in Table 3.3.5-1 shall be OPERABLE.

APPLICABILITY: According to Table 3.3.5-1.

ACTIONS

----------NOTE----------
Separate Condition entry is allowed for each Function.

CONDITION	REQUIRED ACTION	COMPLETION TIME
A. One or more Functions inoperable.	A.1 Place CREFS in the emergency mode of operation.	7 days
B. Required Action and associated Completion Time not met.	----------NOTE---------- Required Actions B.1 and B.2 are not applicable for inoperability of the Containment Isolation actuation function. ----------	
	B.1 Suspend CORE ALTERATIONS.	Immediately
	AND	
	B.2 Suspend movement of irradiated fuel assemblies.	Immediately
	AND	
		(continued)

ACTIONS

CONDITION	REQUIRED ACTION	COMPLETION TIME
B. (continued)	B.3 Be in MODE 3.	6 hours
	AND	
	B.4 Be in MODE 5.	36 hours

SURVEILLANCE REQUIREMENTS

----------NOTE----------
Refer to Table 3.3.5-1 to determine which SRs apply for each CREFS Actuation Function.

SURVEILLANCE		FREQUENCY
SR 3.3.5.1	Perform CHANNEL CHECK.	12 hours
SR 3.3.5.2	Perform COT.	92 days
SR 3.3.5.3	Perform CHANNEL CALIBRATION.	18 months

Table 3.3.5-1 (page 1 of 1)
CREFS Actuation Instrumentation

FUNCTION	APPLICABLE MODES OR OTHER SPECIFIED CONDITIONS	REQUIRED CHANNELS	SURVEILLANCE REQUIREMENTS	TRIP SETPOINT
1. Control Room Radiation [(a)]	1, 2, 3, 4, ~~(b), (c)~~	1	SR 3.3.5.1 SR 3.3.5.2 SR 3.3.5.3	(d)
~~a. Control Room Area Monitor~~	~~1, 2, 3, 4, (a), (b)~~	~~1~~	~~SR 3.3.5.1~~ ~~SR 3.3.5.2~~ ~~SR 3.3.5.3~~	~~NA~~
~~b. Control Room Air Intake~~	~~1, 2, 3, 4, (a), (b)~~	~~1~~	~~SR 3.3.5.1~~ ~~SR 3.3.5.2~~ ~~SR 3.3.5.3~~	~~NA~~
2. Containment Isolation	Refer to LCO 3.3.2, "ESFAS Instrumentation," Function 3, for all initiation functions and requirements.			

(a) Either the Control Room Area Monitor instrument OR the Control Room Air Intake instrument.

(~~a~~b) During movement of irradiated fuel assemblies.

(~~b~~c) During CORE ALTERATIONS.

(d) Control Room Area Monitor: ≤ 2 mrem/hr, Control Room Air Intake: ≤ 6μCi/cc.

3.4 REACTOR COOLANT SYSTEM (RCS)

3.4.16 RCS Specific Activity

LCO 3.4.16 The specific activity of the reactor coolant shall be within limits.

APPLICABILITY: MODES 1 and 2,
MODE 3 with RCS average temperature (T_{avg}) ≥ 500°F.

ACTIONS

CONDITION	REQUIRED ACTION	COMPLETION TIME
A. DOSE EQUIVALENT I-131 > ~~0.8 µCi/gm~~ 1.0 µCi/gm.	----------Note---------- LCO 3.0.4 is not applicable. ----------	
	A.1 Verify DOSE EQUIVALENT I-131 within the acceptable region of Figure 3.4.16-1.	Once per 4 hours
	AND	
	A.2 Restore DOSE EQUIVALENT I-131 to within limit.	48 hours
B. Gross specific activity of the reactor coolant not within limit.	B.1 Be in MODE 3 with T_{avg} < 500°F.	6 hours

(continued)

ACTIONS (continued)

CONDITION	REQUIRED ACTION	COMPLETION TIME
C. Required Action and associated Completion Time of Condition A not met. OR DOSE EQUIVALENT I-131 in the unacceptable region of Figure 3.4.16-1.	C.1 Be in MODE 3 with T_{avg} < 500°F.	6 hours

SURVEILLANCE REQUIREMENTS

SURVEILLANCE		FREQUENCY
SR 3.4.16.1	Verify reactor coolant gross specific activity ≤ 100/Ē µCi/gm.	7 days
SR 3.4.16.2	----------NOTE---------- Only required to be performed in MODE 1. ---------- Verify reactor coolant DOSE EQUIVALENT I-131 specific activity ≤ ~~0.8 µCi/gm~~ 1.0 µCi/gm.	14 days AND Between 2 and 6 hours after a THERMAL POWER change of ≥ 15% RTP within a 1 hour period

(continued)

SURVEILLANCE REQUIREMENTS (continued)

SURVEILLANCE		FREQUENCY
SR 3.4.16.3	----------NOTE---------- Not required to be performed until 31 days after a minimum of 2 effective full power days and 20 days of MODE 1 operation have elapsed since the reactor was last subcritical for ≥ 48 hours. ---------- Determine $\bar{E}$ from a sample taken in MODE 1 after a minimum of 2 effective full power days and 20 days of MODE 1 operation have elapsed since the reactor was last subcritical for ≥ 48 hours.	184 days

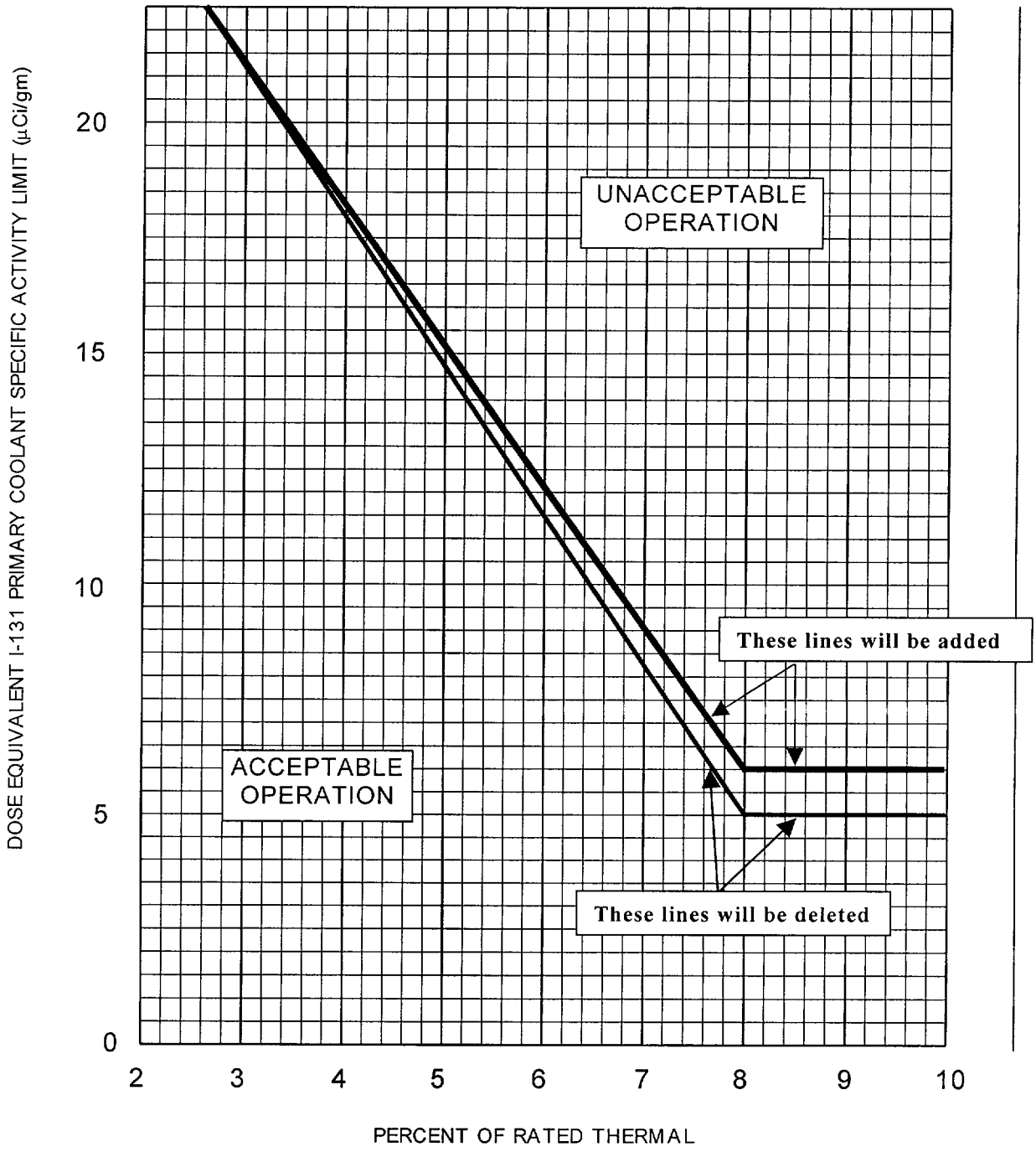

Figure 3.4.16-1 (page 1 of 1)
Reactor Coolant DOSE EQUIVALENT I-131 Specific Activity
Limit Versus Percent of RATED THERMAL POWER

3.7 PLANT SYSTEMS

3.7.9 Control Room Emergency Filtration System (CREFS)

LCO 3.7.9 CREFS shall be OPERABLE.

APPLICABILITY: MODES 1, 2, 3, 4,
During movement of irradiated fuel assemblies,
During CORE ALTERATIONS.

ACTIONS

CONDITION	REQUIRED ACTION		COMPLETION TIME
A. CREFS inoperable.	A.1	Restore CREFS to OPERABLE status.	7 days
B. Required Action and associated Completion Time not met.	B.1	Suspend CORE ALTERATIONS.	Immediately
	AND		
	B.2	Suspend movement of irradiated fuel assemblies.	Immediately
	AND		
	B.3	Be in MODE 3.	6 hours
	AND		
	B.4	Be in MODE 5.	36 hours

SUREVEILLANCE REQUIREMENTS

SURVEILLANCE		FREQUENCY
SR 3.7.9.1	Operate the CREFS for ≥ 15 minutes.	31 days

(continued)

SURVEILLANCE REQUIREMENTS (continued)

SURVEILLANCE		FREQUENCY
SR 3.7.9.2	Perform required CREFS filter testing in accordance with the Ventilation Filter Testing Program (VFTP).	In accordance with VFTP
SR 3.7.9.3	Verify each CREFS emergency make-up fan actuates on an actual or simulated actuation signal.	18 months
SR 3.7.9.4	Verify each CREFS automatic damper in the emergency mode flow path actuates to the correct position on an actual or simulated actuation signal.	18 months
~~SR 3.7.9.5~~	~~Verify CREFS manual start capability and alignment.~~	~~18 months~~
SR 3.7.9.~~6~~5	Verify each CREFS emergency make-up fan can maintain a positive pressure of ≥ 0.125 inches water gauge in the control room envelope, relative to the adjacent turbine building during the emergency mode of operation at a makeup flow rate of 4950 cfm ± 10%.	18 months

3.7 PLANT SYSTEMS

3.7.13 Secondary Specific Activity

LCO 3.7.13 The specific activity of the secondary coolant shall be ≤ ~~1.0 μCi/gm~~ 0.1 μCi/gm DOSE EQUIVALENT I-131.

APPLICABILITY: MODES 1, 2, 3, and 4.

ACTIONS

CONDITION	REQUIRED ACTION	COMPLETION TIME
A. Specific activity not within limit.	A.1 Be in MODE 3.	6 hours
	AND	
	A.2 Be in MODE 5.	36 hours

SURVEILLANCE REQUIREMENTS

SURVEILLANCE		FREQUENCY
SR 3.7.13.1	Verify the specific activity of the secondary coolant is ≤ ~~1.0 μCi/gm~~ 0.1 μCi/gm DOSE EQUIVALENT I-131.	31 days

3.9 REFUELING OPERATIONS

3.9.3 ~~Containment Penetrations~~DELETED

LCO 3.9.3 The containment penetrations shall be in the following status:

a. The equipment hatch closed and held in place with all bolts;

b. One door in each air lock is capable of being closed; and

c. Each Containment Purge and Exhaust System penetration either:

1. closed by a manual or automatic isolation valve, blind flange, or equivalent, or

2. capable of being closed by an OPERABLE Containment Purge and Exhaust Isolation System.

APPLICABILITY: During CORE ALTERATIONS,
During movement of irradiated fuel assemblies within containment.

ACTIONS

CONDITION	REQUIRED ACTION		COMPLETION TIME
A. One or more containment penetrations not in required status.	A.1	Suspend CORE ALTERATIONS.	Immediately
	AND		
	A.2	Suspend movement of irradiated fuel assemblies within containment.	Immediately

SURVEILLANCE REQUIREMENTS

	SURVEILLANCE	FREQUENCY
SR 3.9.3.1	Verify each required containment penetration is in the required status.	7 days
SR 3.9.3.2	----------NOTE---------- Not applicable to containment purge and exhaust valve(s) in penetrations closed to comply with LCO 3.9.3.c.1. ---------- Verify each required containment purge and exhaust valve actuates to the isolation position on an actual or simulated actuation signal.	18 months

PROPOSED TECHNICAL SPECIFICATION BASES CHANGES

(additions are double-underlined; deletions are strikethrough

B 3.3 INSTRUMENTATION

B 3.3.5 Control Room Emergency Filtration System (CREFS) Actuation Instrumentation

BASES

BACKGROUND

The CREFS provides an enclosed control room environment from which the unit can be operated following an uncontrolled release of radioactivity. The control room ventilation system normally operates in the normal operating mode (Mode 1). Upon receipt of an actuation signal, the CREFS initiates the emergency make-up (Mode 4) mode of operation. The control room ventilation system and its operating modes are described in the Bases for LCO 3.7.9, "Control Room Emergency Filtration System."

The actuation instrumentation consists of containment isolation, noble gas radiation monitor in the air intake and control room area radiation monitor. A containment isolation signal or high radiation signal from either of these detectors will initiate the emergency make-up mode of operation (Mode 4) of the CREFS.

APPLICABLE SAFETY ANALYSES

The CREFS provides airborne radiological protection for control room personnel, as demonstrated by the limiting control room dose analyses for the design basis large break loss of coolant accident. Control room dose analysis assumptions are presented in the FSAR, Section 14.3.5 (Ref. 1).

In MODES 1, 2, 3, and 4, a containment isolation signal or the CREFS radiation monitor actuation signal will provide automatic initiation of CREFS in the emergency make-up mode of operation (Mode 4) during design basis events which result in significant radiological releases to the environs (e.g. large break loss of coolant accident, steam generator tube rupture, reactor coolant pump locked rotor, etc;).

The CREFS radiation monitor actuation signal also provides automatic initiation of CREFS, in the emergency make-up mode of operation (Mode 4), to assure control room habitability in the event of a fuel handling accident during movement of irradiated fuel, and CORE ALTERATIONS.

Further Applicable Safety Analysis information for CREFS is contained in the Bases for LCO 3.7.9, "Control Room Emergency Filtration System."

The CREFS actuation instrumentation satisfies Criterion 3 of the NRC Policy Statement.

BASES

LCO

The LCO requirements ensure that instrumentation necessary to initiate the CREFS is OPERABLE.

1. Control Room Radiation

   The LCO requires either the control room area monitor (RE-101) ~~and~~ or the control room air intake noble gas monitor (RE-235) to be OPERABLE, to ensure that the instrumentation necessary to initiate the CREFS emergency make-up mode (Mode 4) is OPERABLE.

   Table 3.3.5-1 identifies the Technical Specification Trip Setpoint for the Control Room Area Monitor and Control Room Air Intakes as ~~not applicable (NA). No Analytical Value is assumed in the accident analysis for these functions. The nominal setting required for the Control Room Area Monitor is 5 mr/hr and the nominal setting for the Control Room Air Intakes is 5E-5 μCi/cc. These nominal settings were developed outside of the setpoint methodology~~ ≤ 2 mrem/hr and ≤ 6E-6 μCi/cc, respectively.

2. Containment Isolation

   Refer to LCO 3.3.2, Function 3, for all initiating Functions and requirements.

APPLICABILITY

The CREFS Functions must be OPERABLE in MODES 1, 2, 3, 4, and during CORE ALTERATIONS and movement of irradiated fuel assemblies.

The Applicability for the CREFS actuation on the ESFAS Safety Injection Functions are specified in LCO 3.3.2. Refer to the Bases for LCO 3.3.2 for discussion of the Safety Injection Function Applicability.

ACTIONS

A Note has been added to the ACTIONS indicating that separate Condition entry is allowed for each Function. The Conditions of this Specification may be entered independently for each Function listed in Table 3.3.5-1 in the accompanying LCO. The Completion Time(s) of the inoperable Function will be tracked separately for each Function starting from the time the Condition was entered for that Function.

BASES

ACTIONS (continued) A.1

Condition A applies to the containment isolation signal~~,~~ and either the control room area radiation monitor (RE-101) ~~and~~ or the control room intake noble gas monitor (RE-235).

If a Function is inoperable, 7 days is permitted to restore the Function to OPERABLE status from the time the Condition was entered for that Function. The 7 day Completion Time is the same as for inoperable CREFS. The basis for this Completion Time is the same as provided in LCO 3.7.9. If the Function cannot be restored to OPERABLE status, CREFS must be placed in the emergency make-up mode of operation (MODE 4). Placing CREFS in the emergency make-up mode of operation accomplishes the actuation instrumentation's safety function.

B.1, B.2, B.3, and B.4

Condition B applies when the Required Action and associated Completion Time for Condition A have not been met. If Movement of irradiated fuel assemblies or CORE ALTERATIONS are in progress, these activities must be suspended immediately to reduce the risk of accidents that would require CREFS actuation. In addition, if any unit is in MODE 1, 2, 3, or 4, the unit must be brought to a MODE in which the LCO requirements are not applicable. To achieve this status, the unit must be brought to MODE 3 within 6 hours and MODE 5 within 36 hours. The allowed Completion Times are reasonable, based on operating experience, to reach the required unit conditions from full power conditions in an orderly manner and without challenging unit systems.

The Required Actions for Condition B are modified by a Note that states that Required Actions B.1 and B.2 are not applicable for inoperability of the Containment Isolation actuation function. This note is necessary because the Applicability for the Containment Isolation actuation function is Modes 1, 2, 3, and 4. The Containment Isolation actuation function is not used for mitigation of accidents involving the movement of irradiated fuel assemblies.

BASES

SURVEILLANCE REQUIREMENTS

A Note has been added to the SR Table to clarify that Table 3.3.5-1 determines which SRs apply to which CREFS Actuation Functions.

SR 3.3.5.1

Performance of the CHANNEL CHECK once every 12 hours ensures that a gross failure of instrumentation has not occurred. A CHANNEL CHECK is normally a comparison of the parameter indicated on one channel to a similar parameter on other channels. However, in the case of the control room area and control room intake noble gas monitors, no independent instrument channel exist, therefore, the CHANNEL CHECK for these monitors will consist of a qualitative assessment of expected channel behavior, based on current plant and control room conditions. A CHANNEL CHECK will detect gross channel failure; thus, it is key to verifying the instrumentation continues to operate properly between each CHANNEL CALIBRATION. The Frequency is based on operating experience that demonstrates channel failure is rare.

SR 3.3.5.2

A COT is performed once every 92 days on each required channel to ensure the entire channel will perform the intended function. This test verifies the capability of the instrumentation to provide the CREFS actuation. The setpoints shall be left consistent with the unit specific calibration procedure tolerance. The Frequency is based on the known reliability of the monitoring equipment and has been shown to be acceptable through operating experience.

SR 3.3.5.3

A CHANNEL CALIBRATION is performed every 18 months, or approximately at every refueling. CHANNEL CALIBRATION is a complete check of the instrument loop, including the sensor.
The test verifies that the channel responds to a measured parameter within the necessary range and accuracy.

The Frequency is based on operating experience and is consistent with the typical industry refueling cycle.

REFERENCES

1. FSAR. Section 14.3.5.

B 3.6 CONTAINMENT SYSTEMS

B 3.6.1 Containment

BASES

BACKGROUND

The containment consists of the concrete reactor building, its steel liner, and the penetrations through this structure. The structure is designed to contain radioactive material that may be released from the reactor core following a design basis Loss of Coolant Accident. Additionally, this structure provides shielding from the fission products that may be present in the containment atmosphere following accident conditions.

The containment is a reinforced concrete structure with a cylindrical wall, a flat foundation mat, and a shallow dome roof. The inside surface of the containment is lined with a carbon steel liner to ensure a high degree of leak tightness during operating and accident conditions.

The cylinder wall is prestressed with a post tensioning system in the vertical and horizontal directions, and the dome roof is prestressed utilizing a three way post tensioning system.

The concrete reactor building is required for structural integrity of the containment under Design Basis Accident (DBA) conditions. The steel liner and its penetrations establish the leakage limiting boundary of the containment. Maintaining the containment OPERABLE limits the leakage of fission product radioactivity from the containment to the environment. SR 3.6.1.1 leakage rate requirements comply with 10 CFR 50, Appendix J, Option B (Ref. 1), as modified by approved exemptions.

The isolation devices for the penetrations in the containment boundary are a part of the containment leak tight barrier. To maintain this leak tight barrier:

a. All penetrations required to be closed during accident conditions are either:

   1. capable of being closed by an OPERABLE automatic containment isolation system, or

   2. closed by manual valves, blind flanges, or de-activated automatic valves secured in their closed positions, except as provided in LCO 3.6.3, "Containment Isolation Valves";

b. Each air lock is OPERABLE, except as provided in LCO 3.6.2, "Containment Air Locks"; and

c. The equipment hatch is installed.

BASES

APPLICABLE SAFETY ANALYSES

The safety design basis for the containment is that the containment must withstand the pressures and temperatures of the limiting design basis Loss of Coolant Accident without exceeding the design leakage rate.

For the design basis Loss of Coolant Accident analyses, it is assumed that the containment is OPERABLE such that, the release of fission product radioactivity, release to the environment is controlled by the rate of containment leakage. The containment was designed with an allowable leakage rate of 0.4% of containment air weight per day (Ref. 3). This leakage rate, used to evaluate offsite doses resulting from accidents, is defined in 10 CFR 50, Appendix J, Option B (Ref. 1), as L_a: the maximum allowable containment leakage rate at the calculated peak containment internal pressure (P_a) resulting from the limiting design basis LOCA. The allowable leakage rate represented by L_a forms the basis for the acceptance criteria imposed on all containment leakage rate testing. L_a is assumed to be ~~0.4%~~ 0.2% per day in the safety analysis at P_a = 60 psig (Ref. ~~3~~2).

Satisfactory leakage rate test results are a requirement for the establishment of containment OPERABILITY.

The containment satisfies Criterion 3 of the NRC Policy Statement.

LCO

Containment OPERABILITY is maintained by limiting leakage to $\leq$ 1.0 L_a, except prior to the first startup after performing a required Containment Leakage Rate Testing Program leakage test. At this time, the applicable leakage limits contained in the Containment Leakage Rate Testing Program must be met.

Compliance with this LCO will ensure a containment configuration, including the equipment hatch, that is structurally sound and that will limit leakage to those leakage rates assumed in the safety analysis.

Individual leakage rates specified for the containment air lock (LCO 3.6.2) are not specifically part of the acceptance criteria of 10 CFR 50, Appendix J, Option B. Therefore, leakage rates exceeding these individual limits only result in the containment being inoperable when the leakage results in exceeding the overall acceptance criteria of 1.0 L_a.

BASES

APPLICABILITY

In MODES 1, 2, 3, and 4, a design basis Loss of Coolant Accident could cause a release of radioactive material into containment. In MODES 5 and 6, the probability and consequences of these events are reduced due to the pressure and temperature limitations of these MODES. Therefore, containment is not required to be OPERABLE in MODE 5 to prevent leakage of radioactive material from containment. The requirements for containment during MODE 6 are addressed in LCO 3.9.3, "Containment Penetrations."

ACTIONS

A.1

In the event containment is inoperable, containment must be restored to OPERABLE status within 1 hour. The 1 hour Completion Time provides a period of time to correct the problem commensurate with the importance of maintaining containment during MODES 1, 2, 3, and 4. This time period also ensures that the probability of an accident (requiring containment OPERABILITY) occurring during periods when containment is inoperable is minimal.

B.1 and B.2

If containment cannot be restored to OPERABLE status within the required Completion Time, the plant must be brought to a MODE in which the LCO does not apply. To achieve this status, the plant must be brought to at least MODE 3 within 6 hours and to MODE 5 within 36 hours. The allowed Completion Times are reasonable, based on operating experience, to reach the required plant conditions from full power conditions in an orderly manner and without challenging plant systems.

SURVEILLANCE REQUIREMENTS

SR 3.6.1.1

Maintaining the containment OPERABLE requires compliance with the visual examinations and containment leakage rate test requirements of the Containment Leakage Rate Testing Program. Failure to meet air lock leakage limits specified in LCO 3.6.2 does not invalidate the acceptability of these overall leakage determinations unless their contribution to overall Type A, B, and C leakage causes that to exceed limits. As left leakage prior to the first startup after performing a required Containment Leakage Rate Testing Program, leakage test is required to be $\leq 0.6\ L_a$ for combined Type B and C leakage, and $\leq 0.75\ L_a$ for overall Type A leakage. At all other times between required leakage rate tests, the acceptance criteria is based on an overall Type A leakage limit of $\leq 1.0\ L_a$. At $\leq 1.0\ L_a$ the offsite dose consequences

BASES

SURVEILLANCE REQUIREMENTS (continued)

are bounded by the assumptions of the safety analysis. SR Frequencies are as required by the Containment Leakage Rate Testing Program. These periodic testing requirements verify that the containment leakage rate does not exceed the leakage rate assumed in the safety analysis.

SR 3.6.1.2

For ungrouted, post tensioned tendons, this SR ensures that the structural integrity of the containment will be maintained in accordance with the provisions of the Containment Tendon Surveillance Program. Testing and Frequency are consistent with the recommendations of Regulatory Guide 1.35 (Ref. 4).

REFERENCES

1. 10 CFR 50, Appendix J, Option B.
2. FSAR, Chapter 14.
3. FSAR, Section 5.1.
4. Regulatory Guide 1.35, Revision 3.

B 3.6 CONTAINMENT SYSTEMS

B 3.6.2 Containment Air Locks

BASES

BACKGROUND

Containment air locks form part of the containment pressure boundary and provide a means for personnel access during all MODES of operation.

Each air lock is nominally a right circular cylinder, approximately 9 feet 2 inches in diameter, with a bulkhead at each end. Each bulkhead includes; a bulkhead door and seals, a pressure equalizing vent valve, and bulkhead actuating shaft seals. In addition to these pressure retaining components, the airlock outer bulkhead also includes pressure retaining penetrations on the cylindrical portion of the airlock. The bulkhead doors are interlocked with each other to prevent simultaneous opening of the doors and or equalizing valves in the redundant bulkheads. The equalizing valves are interlocked to open prior to the bulkhead door, equalizing pressure across the door prior to the latching mechanism disengaging, allowing the door to be opened. Similarly, the equalizing valve closes after its respective bulkhead door is closed and latched. During periods when containment is not required to be OPERABLE, the interlock mechanism may be disabled, allowing both doors of an air lock to remain open for extended periods when frequent containment entry is necessary. Each air lock bulkhead has been designed and tested to certify its ability to withstand a pressure in excess of the maximum expected pressure following a Design Basis Accident (DBA) in containment. As such, OPERABILITY of a single bulkhead supports containment OPERABILITY. Each of the bulkhead doors contains double gasketed seals and local leakage rate testing capability to ensure pressure integrity. To effect a leak tight seal, the air lock design uses pressure seated doors (i.e., an increase in containment internal pressure results in increased sealing force on each door).

Each personnel air lock is provided with limit switches on both door's latches that provide control room indication of door position.

The containment air locks form part of the containment pressure boundary. As such, air lock integrity and leak tightness is essential for maintaining the containment leakage rate within limit in the event of a DBA. Not maintaining air lock integrity or leak tightness may result in a leakage rate in excess of that assumed in the unit safety analyses.

BASES

APPLICABLE SAFETY ANALYSES

The DBA that results in a release of radioactive material within containment is a loss of coolant accident (Ref. 2). In the analysis of this accident, it is assumed that containment is OPERABLE such that release of fission products to the environment is controlled by the rate of containment leakage. The containment was originally designed with an allowable leakage rate of 0.4% of containment air weight per day (Ref. 2). This leakage rate is defined in 10 CFR 50, Appendix J, Option B (Ref. 1), as L_a ~~= 0.4% of containment air weight per day~~, the maximum allowable containment leakage rate at the calculated peak design containment internal pressure, P_a of 60 psig, following a design basis LOCA. The radiological analysis for supporting a LOCA was performed assuming an L_a = 0.2% per day (Ref. 3). This allowable leakage rate forms the basis for the acceptance criteria imposed on the SRs associated with the air locks.

The containment air locks satisfy Criterion 3 of the NRC Policy Statement.

LCO

Each containment air lock forms part of the containment pressure boundary. As part of the containment pressure boundary, the air lock safety function is related to control of the containment leakage rate resulting from a DBA. Thus, each air lock's structural integrity and leak tightness are essential to the successful mitigation of such an event.

Each air lock is required to be OPERABLE. For the air lock to be considered OPERABLE, the air lock interlock mechanism must be OPERABLE, the air lock must be in compliance with the Type B air lock leakage test, and both air lock bulkheads must be OPERABLE. The interlock allows only one air lock door and its associated equalization valve of an air lock to be opened at one time. This provision ensures that a gross breach of containment does not exist when containment is required to be OPERABLE. The OPERABILITY of a single bulkhead (e.g., bulkhead door, door seals, equalization valve, interlock shaft seals, etc;) in each air lock is sufficient to provide a leak tight barrier following postulated events. Nevertheless, both doors and their associated equalization valves are kept closed when the air lock is not being used for normal entry into or exit from containment.

BASES

APPLICABILITY

In MODES 1, 2, 3, and 4, a design basis LOCA could cause a release of radioactive material to containment. In MODES 5 and 6, the probability and consequences of a design basis LOCA are reduced due to the pressure and temperature limitations of these MODES. Therefore, the containment air locks are not required in MODE 5 to prevent leakage of radioactive material from containment as a result of a design basis LOCA. The requirements for the containment air locks during MODE 6 are addressed in LCO 3.9.3, "Containment Penetrations."

ACTIONS

The ACTIONS are modified by a Note that allows entry and exit to perform repairs on the affected air lock component. If the outer door is inoperable, then it may be easily accessed for most repairs. It is preferred that the air lock be accessed from inside primary containment by entering through the other OPERABLE air lock. However, if this is not practicable, or if repairs on either door must be performed from the barrel side of the door then it is permissible to enter the air lock through the OPERABLE door, which means there is a short time during which the containment boundary is not intact (during access through the OPERABLE door). The ability to open the OPERABLE door, even if it means the containment boundary is temporarily not intact, is acceptable due to the low probability of an event that could pressurize the containment during the short time in which the OPERABLE door is expected to be open. After each entry and exit, the OPERABLE door must be immediately closed, but is not required to be locked while repairs are actively being performed on the inoperable bulkhead. If ALARA conditions permit, entry and exit should be via an OPERABLE air lock.

A second Note has been added to provide clarification that, for this LCO, separate Condition entry is allowed for each air lock. This is acceptable, since the Required Actions for each Condition provide appropriate compensatory actions for each inoperable air lock. Complying with the Required Actions may allow for continued operation, and a subsequent inoperable air lock is governed by subsequent Condition entry and application of associated Required Actions.

In the event the air lock leakage results in exceeding the overall containment leakage rate, Note 3 directs entry into the applicable Conditions and Required Actions of LCO 3.6.1, "Containment."

A.1, A.2, and A.3

With one air lock bulkhead in one or more containment air locks inoperable, the door and its associated equalization valve in the

ACTIONS (continued) OPERABLE bulkhead must be verified closed (Required Action A.1) in each affected containment air lock. This ensures that a leak tight containment barrier is maintained by the use of an OPERABLE bulkhead. This action must be completed within 1 hour. This specified time period is consistent with the ACTIONS of LCO 3.6.1, which requires containment be restored to OPERABLE status within 1 hour.

In addition, the affected air lock penetration must be isolated by locking closed the bulkhead door and equalization valve on the OPERABLE bulkhead within the 24 hour Completion Time. The 24 hour Completion Time is reasonable for locking the bulkhead door and equalization valve on the OPERABLE bulkhead, considering the bulkhead door and equalization valve on the OPERABLE bulkhead of the affected air lock is being maintained closed.

Required Action A.3 verifies that an air lock with an inoperable bulkhead has been isolated by the use of a locked and closed bulkhead door and equalization valve on the OPERABLE bulkhead. This ensures that an acceptable containment leakage boundary is maintained. The Completion Time of once per 31 days is based on engineering judgment and is considered adequate in view of the low likelihood of a locked door or equalization valve being mispositioned and other administrative controls. Required Action A.3 is modified by a Note that applies to air lock doors and equalization valves located in high radiation areas and allows these doors and valves to be verified locked closed by use of administrative means. Allowing verification by administrative means is considered acceptable, since access to these areas is typically restricted. Therefore, the probability of misalignment of the door or equalization valve, once it has been verified to be in the proper position, is small.

The Required Actions have been modified by two Notes. Note 1 ensures that only the Required Actions and associated Completion Times of Condition C are required if both bulkheads in the same air lock are inoperable. With both bulkheads in the same air lock inoperable, an OPERABLE isolation boundary is not available. Required Actions C.1 and C.2 are the appropriate remedial actions. The exception of Note 1 does not affect tracking the Completion Time from the initial entry into Condition A; only the requirement to comply with the Required Actions. Note 2 allows use of the air lock for entry and exit for 7 days under administrative controls if both air locks have an inoperable bulkhead. This 7 day restriction begins when the second air lock is discovered inoperable. Containment entry may be required on a periodic basis to perform Technical Specifications (TS) Surveillances and Required Actions, as well as other activities on equipment inside containment that are required by TS or activities on equipment that support TS-required equipment. This Note is not intended to preclude performing other activities (i.e., non-TS-required activities) if the containment is entered,

BASES

ACTIONS (continued) using the inoperable air lock, to perform an allowed activity listed above. This allowance is acceptable due to the low probability of an event that could pressurize the containment during the short time that the OPERABLE door is expected to be open.
~~consistent with those specified in Condition A.~~

B.1, B.2, and B.3

With an air lock interlock mechanism inoperable in one or more air locks, the Required Actions and associated Completion Times are consistent with those specified in Condition A. The Required Actions have been modified by two Notes. Note 1 ensures that only the Required Actions and associated Completion Times of Condition C are required if both bulkheads in the same air lock are inoperable. With both bulkheads in the same air lock inoperable, an OPERABLE isolation boundary is not available. Required Actions C.1 and C.2 are the appropriate remedial actions. Note 2 allows entry into and exit from containment under the control of a dedicated individual stationed at the air lock to ensure that only one bulkhead door and its associated equalization valve is opened at a time (i.e., the individual performs the function of the interlock).

Required Action B.3 is modified by a Note that applies to air lock doors and equalization valves located in high radiation areas and allows these doors and valves to be verified locked closed by use of administrative means. Allowing verification by administrative means is considered acceptable, since access to these areas is typically restricted. Therefore, the probability of misalignment of the door or equalization valve, once it has been verified to be in the proper position, is small.

C.1, C.2, and C.3

With one or more air locks inoperable for reasons other than those described in Condition A or B, Required Action C.1 requires action to be initiated immediately to evaluate previous combined leakage rates using current air lock test results. An evaluation is acceptable, since it is overly conservative to immediately declare the containment inoperable if both bulkheads in an air lock are inoperable. In many instances (e.g., only one seal per door has failed), containment remains OPERABLE, yet only 1 hour (per LCO 3.6.1) would be provided to restore the air lock bulkhead to OPERABLE status prior to requiring a plant shutdown. In addition, even with both doors failing the seal test, the overall containment leakage rate can still be within limits.

Required Action C.2 requires that one door and its associated equalization valve in the affected containment air lock must be verified

BASES

ACTIONS (continued)

to be closed within the 1 hour Completion Time. This specified time period is consistent with the ACTIONS of LCO 3.6.1, which requires that containment be restored to OPERABLE status within 1 hour.

Additionally, the affected air lock(s) must be restored to OPERABLE status within the 36 hour Completion Time. The specified time period is considered reasonable for restoring an inoperable air lock to OPERABLE status, assuming that at least one door and its associated equalization valve are maintained closed in each affected air lock.

D.1 and D.2

If the inoperable containment air lock cannot be restored to OPERABLE status within the required Completion Time, the plant must be brought to a MODE in which the LCO does not apply. To achieve this status, the plant must be brought to at least MODE 3 within 6 hours and to MODE 5 within 36 hours. The allowed Completion Times are reasonable, based on operating experience, to reach the required plant conditions from full power conditions in an orderly manner and without challenging plant systems.

SURVEILLANCE REQUIREMENTS

SR 3.6.2.1

Maintaining containment air locks OPERABLE requires compliance with the leakage rate test requirements of the Containment Leakage Rate Testing Program. This SR reflects the leakage rate testing requirements with regard to air lock leakage (Type B leakage tests). The acceptance criteria specified in the Containment Leakage Rate Testing Program for the air locks, limits airlock leakage to a small percentage of the combined Type B and C leakage limit.

The Frequency is required by the Containment Leakage Rate Testing Program.

The SR has been modified by two Notes. Note 1 states that an inoperable air lock door does not invalidate the previous successful performance of the overall air lock leakage test. This is considered reasonable since either air lock door is capable of providing a fission product barrier in the event of a DBA. Note 2 has been added to this SR requiring the results to be evaluated against the acceptance criteria which is applicable to SR 3.6.1.1. This ensures that air lock leakage is properly accounted for in determining the combined Type B and C containment leakage rate.

BASES

SURVEILLANCE REQUIREMENTS (continued)

SR 3.6.2.2

The bulkhead doors and equalization valves are interlocked with each other to prevent simultaneous opening of the doors and or equalizing valves in the redundant bulkheads. Since both the inner and outer bulkheads of an air lock are designed to withstand the maximum expected post accident containment pressure, OPERABILITY of either bulkhead will support containment OPERABILITY. Thus, the airlock interlock feature supports containment OPERABILITY while the air lock is being used for personnel transit in and out of the containment. Periodic testing of this interlock demonstrates that the interlock will function as designed and that simultaneous opening of the inner and outer doors and or equalizing valves in redundant bulkheads will not inadvertently occur. Due to the purely mechanical nature of this interlock, and given that the interlock mechanism is not normally challenged when the containment air lock door is used for entry and exit (procedures require strict adherence to single door opening), this test is only required to be performed every 24 months. The 24 month Frequency is based on the need to perform this Surveillance under the conditions that apply during a plant outage, and the potential for loss of containment OPERABILITY if the Surveillance were performed with the reactor at power. The 24 month Frequency for the interlock is justified based on generic operating experience. The Frequency is based on engineering judgment and is considered adequate given that the interlock is not challenged during the use of the airlock.

REFERENCES

1. 10 CFR 50, Appendix J, Option B.
2. FSAR, Section 5.5.
3. FSAR, Section 14.3.5.

B 3.7 PLANT SYSTEMS

B 3.7.9 Control Room Emergency Filtration System (CREFS)

BASES

BACKGROUND

The CREFS provides a protected environment from which operators can control the unit following an uncontrolled release of radioactivity. The CREFS is a subsystem of the Control Room HVAC system.

The CREFS consists of one emergency make-up air filtration unit, two emergency make-up fans, two recirculation fans, and the required ducts and dampers necessary to establish the required flow paths and isolation boundaries. The CREFS is an emergency system, parts of which operate during normal unit operations. The ~~CREFS~~ Control Room HVAC system has four modes of operation.

- Mode 1 (normal operation) - One of the two recirculation fans (W-13B1 or W-13B2) are in operation. Outside air is supplied from an intake penthouse located on the roof of the auxiliary building at a rate of approximately 1000 cfm (5% of system design flow) via damper VNCR-4849C which is throttled to a predetermined position. The make-up air combines with return air from the control room and computer room then passing through filter (F-43) and cooling units (HX-100 A&B) before entering the recirculation fan. Filtered and cooled air is supplied to the mechanical equipment room and through separate heating coils (HX-92 and HX-91 A&B), and humidifiers (Z-78 and Z-77) to the computer and control rooms respectively. Room thermostats and humidistats control the operation of the heating coils, chilled water system, and humidifiers. The control room heating, cooling, and humidification systems are not required to demonstrate compliance with the control room habitability limits of 10 CFR 50 Appendix A, GDC-19 as required by NUREG-0737, Item III.D.3.4. The computer room is supplied with supplementary cooling during normal operation via supplementary air conditioning units (W-107A/HX-190A/HX-191A or W-107B/HX-190B/HX-191B). Nominally, the control room washroom exhaust fan (W-15) is also in operation. Operation of the Control Room Ventilation System in mode 1 (normal operation) is not assumed for control room habitability, and is therefore not a Technical Specification required mode of operation.

- Mode 2 (recirculation operation) - 100% of the control room and computer room air is recirculated. In this mode, the outside air damper (VNCR-4849C) is closed and the control room washroom exhaust fan is de-energized. Recirculation can be automatically

BASES

BACKGROUND (continued)

initiated by a Containment Isolation or Safety Injection signal, or can be manually initiated from the control room. Operation of the Control Room Ventilation System in mode 2 (recirculation) is not assumed for control room habitability, and is therefore not a Technical Specification required mode of operation.

- Mode 3 (recirculation/charcoal adsorber operation) - One of two control room emergency make-up fans (W-14A or W-14B) is in operation and air is supplied to the emergency make-up charcoal filter unit (F-16) via the computer and control room return air duct (damper VNCR-4851B). The normal outside air supply is secured (damper VNCR-4849C closed) and the control room washroom exhaust fan is de-energized. In this mode approximately 25% of the return air is being recirculated by the emergency make-up charcoal filter unit back to the suction of the control room recirculation fans. Recirculation/charcoal adsorber mode is manually initiated from the control room. Operation of the Control Room Ventilation System in mode 3 (recirculation/charcoal adsorber mode) is not assumed for control room habitability, and is therefore not a Technical Specification required mode of operation.

- Mode 4 (emergency make-up) - Operation in this mode is similar to mode 3 except return air inlet damper VNCR-4851B to the emergency fans remains closed and outside air supply to the emergency make-up charcoal filter unit opens (damper VNCR-4851A). This allows approximately 4950 cfm (25% of system design flow) of make-up air to pass through the emergency make-up charcoal filter unit to the suction of the control room recirculation fan. This make-up flow rate is sufficient to assure a positive pressure of ≥ 1/8 in. water gage is maintained in the control and computer rooms to prevent excessive unfiltered in-leakage into the control room ventilation boundary. Mode 4 (emergency make-up) is automatically initiated by a containment isolation signal, a high radiation signal from the control room area monitor RE-101, or a high radiation signal from noble gas monitor RE-235 located in the supply duct to the control room. This mode of operation can also be manually initiated from the control room. Operation of the Control Room Ventilation System in mode 4 (emergency make-up) is the assumed mode of operation for the control room habitability analysis, and is therefore the only mode of operation addressed by this LCO.

BASES

BACKGROUND (continued)

The air entering the control room is continuously monitored by noble gas radiation monitors and the control room itself is continuously monitored by an area radiation monitor. One detector output above its setpoint will actuate the emergency make-up mode of operation (mode 4) for the CREFS.

The limiting design basis accident for the control room dose analysis is the large break LOCA. ~~CREFS does not automatically restart after being load shed following a loss of offsite power; manual action is required to restart CREFS.~~ Although it has been demonstrated that a loss of offsite power does not need to be assumed coincident with a LOCA with respect to CREFS system analysis and control room habitability, t~~T~~he control room emergency make-up and recirculation fans have been included in the emergency diesel generator loading profile during the recirculation phase of a loss of coolant accident.

The CREFS will pressurize the control and computer rooms to at least 0.125 inches water gauge in the emergency make-up mode of operation. The CREFS role in maintaining the control room habitable is discussed in the FSAR, Section 9.8 (Ref. 1).

APPLICABLE SAFETY ANALYSES

The CREFS provides airborne radiological protection for control room personnel, as demonstrated by the limiting control room dose analyses for the design basis large break loss of coolant accident. Control room dose analysis assumptions are presented in the FSAR, Section 14.3.5 (Ref. 2).

~~The analyses for radiological consequences in the control room are based on operation of CREFS in the emergency make-up mode (mode 4). The radiological effects in the control room, of the stopping and subsequent restart of CREFS after a loss of offsite power would not be significantly greater than the doses associated with continuous operation of CREFS post-accident, based on the following:~~

~~1. The control room would start from positive pressurization because the system normally runs in a positive pressurization mode (mode 1).~~

~~2. During the loss of ventilation, the air inside the control room would heat up and expand, which would continue to enhance outflow, minimizing in-leakage.~~

~~3. The control room would normally be closed which reduces in-leakage.~~

BASES

APPLICABLE SAFETY ANALYSES (continued)

~~4. The control room ventilation system damper positions would automatically reposition to the emergency make-up configuration (mode 4). Therefore, if any in-leakage through the control room intake occurred, it would be filtered at the same or higher efficiency assumed in the analysis.~~

~~5. Noble gases would not be drawn into the control room by the control room charcoal filter fan.~~

The CREFS satisfies Criterion 3 of the NRC Policy Statement.

LCO

The CREFS (mode 4) is required to be OPERABLE to ensure that the control room habitability limits are met following a limiting design basis LOCA. Total system failure could result in exceeding the control room operator ~~thyroid~~ TEDE dose limit of ~~30~~ 5 rem in the event of a large radioactive release. The CREFS is considered OPERABLE when the individual components necessary to filter and limit control room in-leakage are OPERABLE. CREFS is considered OPERABLE when:

a. Both emergency make-up fans (W-14A and W-14B) are OPERABLE;

b. Both recirculation fans (W-13B1 and W-13B2) are OPERABLE;

c. Emergency make-up filter unit (F-16), HEPA filters and charcoal adsorbers are not excessively restricting flow, and are capable of performing their filtration functions;

d. Control room ventilation envelope is capable of achieving and maintaining a positive pressure of at least 0.125 inches water gauge in the emergency make-up mode of operation;

e. Ductwork and dampers are OPERABLE, and air circulation can be maintained~~; and~~.

~~f. CREFS is capable of being manually initiated in the emergency make-up mode of operation (mode 4).~~

In addition, the control room boundary must be maintained, including the integrity of the walls, floors, ceilings, ductwork, and access doors.

BASES

APPLICABILITY

In MODES 1, 2, 3, 4, and during movement of irradiated fuel assemblies and during CORE ALTERATIONS, CREFS must be OPERABLE to control operator exposure during and following a DBA.

During movement of irradiated fuel assemblies and CORE ALTERATIONS, the CREFS must be OPERABLE to cope with the release from a fuel handling accident.

ACTIONS

A.1

When CREFS is inoperable, action must be taken to restore the system to OPERABLE status within 7 days. In this Condition, the remaining OPERABLE CREFS components may be adequate to perform the control room protection function; however, overall reliability may be reduced because a single active failure could result in loss of CREFS function. The 7 day Completion Time is based on the low probability of a DBA challenging control room habitability occurring during this time period.

B.1, B.2, B.3, and B.4

If CREFS cannot be restored to OPERABLE status within the required Completion Time with CORE ALTERATIONS or movement of irradiated fuel in progress, these activities must be suspended immediately. Immediately suspending these activities places the unit in a condition that minimizes risk from these activities. This does not preclude the movement of fuel to a safe position.

In MODE 1, 2, 3, or 4, if CREFS cannot be restored to OPERABLE status within the required Completion Time, the unit must be placed in a MODE that minimizes accident risk. To achieve this status, the unit must be placed in at least MODE 3 within 6 hours, and in MODE 5 within 36 hours. The allowed Completion Times are reasonable, based on operating experience, to reach the required unit conditions from full power conditions in an orderly manner and without challenging unit systems.

BASES

SURVEILLANCE REQUIREMENTS

SR 3.7.9.1

Standby systems should be checked periodically to ensure that they function properly. As the environment and normal operating conditions on this system are not too severe, testing each fan subsystem once every month provides an adequate check of this system. Systems without heaters need only be operated for ≥ 15 minutes to demonstrate the function of the system. The 31 day Frequency is based on the reliability of the equipment.

SR 3.7.9.2

This SR verifies that the required CREFS testing is performed in accordance with the Ventilation Filter Testing Program (VFTP). The Frequency of CREFS filter tests are in accordance with Regulatory Guide 1.52 (Ref. 3). The VFTP includes testing the performance of the HEPA filter, charcoal adsorber efficiency, minimum flow rate, and the physical properties of the activated charcoal. Specific test Frequencies and additional information are discussed in detail in the VFTP.

SR 3.7.9.3

This SR verifies that each CREFS emergency make-up fan starts and operates on an actual or simulated actuation signal. The Frequency of 18 months is specified in Regulatory Guide 1.52 (Ref. 3).

SR 3.7.9.4

This SR verifies that each CREFS automatic damper in the emergency make-up mode flow path will actuate to its required position on an actuation signal. The Frequency of 18 months is specified in Regulatory Guide 1.52 (Ref. 3).

~~SR 3.7.9.5~~

~~This test verifies manual actuation capability for CREFS. Manual actuation capability is a required for OPERABILITY of the CREFS because CREFS does not automatically restart after being load shed following a loss of offsite power. Manual action is required to restart and align the CREFS after a loss of offsite power, which is verified through performance of this SR. The 18 month Frequency is acceptable based on the inherent reliability of manual actuation circuits.~~

BASES

SURVEILLANCE REQUIREMENTS (continued)

SR 3.7.9.~~6~~5

This SR verifies the integrity of the control room enclosure. The control room positive pressure, with respect to potentially contaminated adjacent areas, is periodically tested to verify proper functioning of the CREFS. During the emergency mode of operation, the CREFS is designed to pressurize the control room ≥ 0.125 inches water gauge positive pressure with respect to adjacent areas in order to minimize unfiltered inleakage. The CREFS is designed to maintain this positive pressure with one emergency make-up fan in operation at a makeup flow rate of ± 10% of the nominal make-up pressurization flow rate of approximately 4950 cfm. The Frequency of 18 months is consistent with the guidance provided in NUREG-0800 (Ref. 4).

REFERENCES

1. FSAR. Section 9.8.
2. FSAR. Section 14.3.5.
3. Regulatory Guide 1.52, Rev. 2.
4. NUREG-0800, Section 6.4, Rev. 2, July 1981.

B 3.9 REFUELING OPERATIONS

B 3.9.3 ~~Containment Penetrations~~DELETED

BASES

BACKGROUND

During CORE ALTERATIONS or movement of irradiated fuel assemblies within containment, a release of fission product radioactivity within containment will be restricted from escaping to the environment when the LCO requirements are met. In MODES 1, 2, 3, and 4, this is accomplished by maintaining containment OPERABLE as described in LCO 3.6.1, "Containment." In MODE 6, the potential for containment pressurization as a result of an accident is not likely; therefore, requirements to isolate the containment from the outside atmosphere can be less stringent. Since there is no potential for containment pressurization, the Appendix J leakage criteria and tests are not required.

The containment serves to minimize the escape of fission product radioactivity to the environment that may be released from the reactor core following an accident, such that offsite radiation exposures are maintained well within the requirements of 10 CFR 100. Additionally, the containment provides radiation shielding from the fission products that may be present in the containment atmosphere following accident conditions.

The containment equipment hatch, which is part of the containment pressure boundary, provides a means for moving large equipment and components into and out of containment. During CORE ALTERATIONS or movement of irradiated fuel assemblies within containment, the equipment hatch must be held in place with all bolts.

The containment air locks, which are also part of the containment pressure boundary, provide a means for personnel access during MODES 1, 2, 3, and 4 unit operation in accordance with LCO 3.6.2, "Containment Air Locks." Each air lock has a door at both ends. The doors are normally interlocked to prevent simultaneous opening when containment OPERABILITY is required. During periods of unit shutdown when containment closure is not required, the door interlock mechanism may be disabled, allowing both doors of an air lock to remain open for extended periods when frequent containment entry is necessary. During CORE ALTERATIONS or movement of irradiated fuel assemblies within containment, one airlock door must always remain capable of being closed.

BASES

BACKGROUND (continued)

The requirements for containment purge and exhaust system penetration closure ensure that a release of fission product radioactivity within containment will be restricted to within regulatory limits.

The Containment Purge and Exhaust System includes a 36 inch purge penetration and a 36 inch exhaust penetration. During MODES 1, 2, 3, and 4, the two valves in each of the purge and exhaust penetrations are secured in the closed position. The Containment Purge and Exhaust System is not subject to a Specification in MODE 5.

In MODE 6, large air exchanges are necessary to conduct refueling operations. The 36 inch purge system is used for this purpose, and all four valves are closed by the Containment Purge and Exhaust Isolation Instrumentation.

APPLICABLE SAFETY ANALYSES

During CORE ALTERATIONS or movement of irradiated fuel assemblies within containment, the most severe radiological consequences result from a fuel handling accident. The fuel handling accident is a postulated event that involves damage to irradiated fuel (Ref. 1). Fuel handling accidents, analyzed in Reference 2, include dropping a single irradiated fuel assembly and handling tool or a heavy object onto other irradiated fuel assemblies. The requirements of LCO 3.9.6, "Refueling Cavity Water Level," and the minimum decay time of 161 hours prior to CORE ALTERATIONS ensure that the release of fission product radioactivity subsequent to a fuel handling accident, results in doses that are well within the guideline values specified in 10 CFR 100. Standard Review Plan, Section 15.7.4, Rev. 1 (Ref. 2), defines "well within" 10 CFR 100 to be 25% or less of the 10 CFR 100 values. The acceptance limits for offsite radiation exposure will be 25% of 10 CFR 100 values or the NRC staff approved licensing basis (e.g., a specified fraction of 10 CFR 100 limits).

Containment penetrations satisfy Criterion 3 of the NRC Policy Statement.

LCO

This LCO limits the consequences of a fuel handling accident in containment by limiting the potential escape paths for fission product radioactivity released within containment. The LCO requires any Containment Purge and Exhaust System penetration to be closed except for the OPERABLE containment purge and exhaust penetrations. For the OPERABLE containment purge and exhaust penetrations, this LCO ensures that these penetrations are isolable by the Containment Purge and Exhaust Isolation System. The

BASES

LCO (continued)

OPERABILITY requirements for this LCO ensure that the automatic purge and exhaust valve closure specified in the FSAR can be achieved.

The containment personnel airlock doors may be open during movement of irradiated fuel in the containment and during CORE ALTERATIONS provided that one door is capable of being closed in the event of a fuel handling accident. Should a fuel handling accident occur inside containment, one personnel airlock door will be closed following an evacuation of containment.

The allowance to have containment personnel airlocks open during fuel movements and CORE ALTERATIONS is based on the Point Beach confirmatory dose calculation of a fuel handling accident. This calculation assumes a ground level release with acceptable radiological consequences. The personnel airlocks are not assumed to be closed during the fuel handling accident, nor are the airlocks assumed to be closed within any amount of time following the fuel handling accident.

APPLICABILITY

The containment penetration requirements are applicable during CORE ALTERATIONS or movement of irradiated fuel assemblies within containment because this is when there is a potential for a fuel handling accident. In MODES 1, 2, 3, and 4, containment penetration requirements are addressed by LCO 3.6.1. In MODES 5 and 6, when CORE ALTERATIONS or movement of irradiated fuel assemblies within containment are not being conducted, the potential for a fuel handling accident does not exist. Therefore, under these conditions no requirements are placed on containment penetration status.

ACTIONS

A.1 and A.2

If the containment equipment hatch, air locks, or any containment Purge and Exhaust System penetration is not in the required status, including the Containment Purge and Exhaust Isolation System not capable of automatic actuation when the purge and exhaust valves are open, the unit must be placed in a condition where the isolation function is not needed. This is accomplished by immediately suspending CORE ALTERATIONS and movement of irradiated fuel assemblies within containment. Performance of these actions shall not preclude completion of movement of a component to a safe position.

BASES

SURVEILLANCE REQUIREMENTS

SR 3.9.3.1

This Surveillance demonstrates that each of the containment penetrations required to be in its closed position is in that position. The Surveillance on the open purge and exhaust valves will demonstrate that the valves are not blocked from closing. Also the Surveillance will demonstrate that each valve operator has motive power, which will ensure that each valve is capable of being closed by an OPERABLE automatic containment purge and exhaust isolation signal.

The Surveillance is performed every 7 days during CORE ALTERATIONS or movement of irradiated fuel assemblies within containment. The Surveillance interval is selected to be commensurate with the normal duration of time to complete fuel handling operations. A surveillance before the start of refueling operations will provide two or three surveillance verifications during the applicable period for this LCO.

SR 3.9.3.2

This Surveillance demonstrates that each containment purge and exhaust valve actuates to its isolation position on manual initiation or on an actual or simulated high radiation signal. The 18 month Frequency maintains consistency with other similar ESFAS instrumentation and valve testing requirements. SR 3.6.3.5 demonstrates that the isolation time of each valve is in accordance with the Inservice Testing Program requirements. These Surveillances performed during MODE 6 will ensure that the valves are capable of closing after a postulated fuel handling accident to limit a release of fission product radioactivity from the containment.

The SR is modified by a Note stating that this demonstration is not applicable to valves in isolated penetrations. LCO 3.9.3.c.1 provides the option to close penetrations in lieu of requiring automatic isolation capability.

REFERENCES

1. FSAR. Section 14.2.1.

2. NUREG-0800, Section 15.7.4, Rev. 1, July 1981.

B 3.9 REFUELING OPERATIONS

B 3.9.6 Refueling Cavity Water Level

BASES

BACKGROUND

The movement of irradiated fuel assemblies or performance of CORE ALTERATIONS, except during latching and unlatching of control rod drive shafts, within containment requires a minimum water level of 23 ft above the top of the reactor vessel flange. During refueling, this maintains sufficient water level in the containment, refueling canal, fuel transfer canal, refueling cavity, and spent fuel pool. Sufficient water is necessary to retain iodine fission product activity in the water in the event of a fuel handling accident (Refs. 1 and 2). Sufficient iodine activity would be retained to limit offsite doses from the accident to < 25% of ~~10 CFR 100~~ 10 CFR 50.67 limits, as provided by the guidance of Reference ~~3~~1.

APPLICABLE SAFETY ANALYSES

During CORE ALTERATIONS and movement of irradiated fuel assemblies, the water level in the refueling canal and the refueling cavity is an initial condition design parameter in the analysis of a fuel handling accident in containment~~, as postulated by Regulatory Guide 1.25~~ (Ref. 1). A minimum water level of 23 ft ~~(Regulatory Position C.1.c of Ref. 1)~~ allows an overall decontamination factor of ~~100~~ 200 ~~(Regulatory Position C.1.g of Ref. 1)~~ to be used in the accident analysis for iodine. ~~This relates to the assumption that 99% of the total iodine released from the pellet to cladding gap of all the dropped fuel assembly rods is retained by the refueling cavity water. The fuel pellet to cladding gap is assumed to contain 10% of the total fuel rod iodine inventory (Ref. 1).~~ This relates to the assumption that 99.85% of the iodine released from the damaged fuel assembly gaps is elemental and the remainder is organic. Therefore, an overall decontamination factor of 200 is achieved if an elemental decontamination factor of 285 is assumed (Ref. 1).

The fuel handling accident analysis inside containment is described in Reference 2. With a minimum water level of 23 ft and a minimum decay time of ~~161~~ 65 hours prior to fuel handling, the analysis and test programs demonstrate that the iodine release due to a postulated fuel handling accident is adequately captured by the water and offsite doses are maintained within allowable limits (Ref~~s. 4 and 5~~, 3).

Refueling cavity water level satisfies Criterion 2 of the NRC Policy Statement.

BASES

LCO

A minimum refueling cavity water level of 23 ft above the reactor vessel flange is required to ensure that the radiological consequences of a postulated fuel handling accident inside containment are within acceptable limits, as provided by the guidance of Reference ~~3~~1.

APPLICABILITY

LCO 3.9.6 is applicable during CORE ALTERATIONS, except during latching and unlatching of control rod drive shafts, and when moving irradiated fuel assemblies within containment. The LCO minimizes the possibility of a fuel handling accident in containment that is beyond the assumptions of the safety analysis. If irradiated fuel assemblies are not present in containment, there can be no significant radioactivity release as a result of a postulated fuel handling accident. Requirements for fuel handling accidents in the spent fuel pool are covered by LCO 3.7.15, "Fuel Storage Pool Water Level."

ACTIONS

A.1 and A.2

With a water level of < 23 ft above the top of the reactor vessel flange, all operations involving CORE ALTERATIONS or movement of irradiated fuel assemblies within the containment shall be suspended immediately to ensure that a fuel handling accident cannot occur.

The suspension of CORE ALTERATIONS and fuel movement shall not preclude completion of movement of a component to a safe position.

SURVEILLANCE REQUIREMENTS

SR 3.9.6.1

Verification of a minimum water level of 23 ft above the top of the reactor vessel flange ensures that the design basis for the analysis of the postulated fuel handling accident during refueling operations is met. Water at the required level above the top of the reactor vessel flange limits the consequences of damaged fuel rods that are postulated to result from a fuel handling accident inside containment (Ref. 2).

The Frequency of 24 hours is based on engineering judgment and is considered adequate in view of the large volume of water and the normal procedural controls of valve positions, which make significant unplanned level changes unlikely.

BASES

REFERENCES

1. ~~Regulatory Guide 1.25, March 23, 1972~~Regulatory Guide 1.183.

2. FSAR. Section 14.2.1.

3. ~~NUREG-0800, Section 15.7.4~~10 CFR 50.67.

4. ~~10 CFR 100.10.~~

5. ~~Malinowski, D. D., Bell, M. J., Duhn, E., and Locante, J., WCAP-828, Radiological Consequences of a Fuel Handling Accident, December 1971.~~

REVISED TECHNICAL SPECIFICATION AND BASES CHANGES

(incorporating proposed changes)

TABLE OF CONTENTS

1.1 Definitions

L_a	The maximum allowable primary containment leakage rate, L_a, shall be 0.2% of primary containment air weight per day at the peak design containment pressure (P_a).
LEAKAGE	LEAKAGE shall be: a. <u>Identified LEAKAGE</u> 1. LEAKAGE, such as that from pump seals or valve packing (except reactor coolant pump (RCP) seal water injection or leakoff), that is captured and conducted to collection systems or a sump or collecting tank; 2. LEAKAGE into the containment atmosphere from sources that are both specifically located and known either not to interfere with the operation of leakage detection systems or not to be pressure boundary LEAKAGE; or 3. Reactor Coolant System (RCS) LEAKAGE through a steam generator (SG) to the Secondary System; b. <u>Unidentified LEAKAGE</u> All LEAKAGE (except RCP seal water injection or leakoff) that is not identified LEAKAGE; c. <u>Pressure Boundary LEAKAGE</u> LEAKAGE (except SG LEAKAGE) through a nonisolable fault in an RCS component body, pipe wall, or vessel wall.
MASTER RELAY TEST	A MASTER RELAY TEST shall consist of energizing all master relays in the channel required for OPERABILITY and verifying the OPERABILITY of each required master relay. The MASTER RELAY TEST shall include a continuity check of each associated required slave relay. The MASTER RELAY TEST may be performed by means of any series of sequential, overlapping, or total channel steps.

Table 3.3.5-1 (page 1 of 1)
CREFS Actuation Instrumentation

	FUNCTION	APPLICABLE MODES OR OTHER SPECIFIED CONDITIONS	REQUIRED CHANNELS	SURVEILLANCE REQUIREMENTS	TRIP SETPOINT
1.	Control Room Radiation [(a)]	1, 2, 3, 4, (b), (c)	1	SR 3.3.5.1 SR 3.3.5.2 SR 3.3.5.3	(d)
2.	Containment Isolation	Refer to LCO 3.3.2, "ESFAS Instrumentation," Function 3, for all initiation functions and requirements.			

(a) Either the Control Room Area Monitor instrument OR the Control Room Air Intake instrument.

(b) During movement of irradiated fuel assemblies.

(c) During CORE ALTERATIONS.

(d) Control Room Area Monitor: ≤ 2 mrem/hr, Control Room Air Intake: ≤ 6μCi/cc.

3.4 REACTOR COOLANT SYSTEM (RCS)

3.4.16 RCS Specific Activity

LCO 3.4.16 The specific activity of the reactor coolant shall be within limits.

APPLICABILITY: MODES 1 and 2,
MODE 3 with RCS average temperature (T_{avg}) ≥ 500°F.

ACTIONS

CONDITION	REQUIRED ACTION	COMPLETION TIME
A. DOSE EQUIVALENT I-131 > 1.0 µCi/gm.	----------Note---------- LCO 3.0.4 is not applicable. ---------- A.1 Verify DOSE EQUIVALENT I-131 within the acceptable region of Figure 3.4.16-1. AND A.2 Restore DOSE EQUIVALENT I-131 to within limit.	 Once per 4 hours 48 hours
B. Gross specific activity of the reactor coolant not within limit.	B.1 Be in MODE 3 with T_{avg} < 500°F.	6 hours

(continued)

ACTIONS (continued)

CONDITION	REQUIRED ACTION	COMPLETION TIME
C. Required Action and associated Completion Time of Condition A not met. OR DOSE EQUIVALENT I-131 in the unacceptable region of Figure 3.4.16-1.	C.1 Be in MODE 3 with T_{avg} < 500°F.	6 hours

SURVEILLANCE REQUIREMENTS

SURVEILLANCE		FREQUENCY
SR 3.4.16.1	Verify reactor coolant gross specific activity ≤ 100/Ē µCi/gm.	7 days
SR 3.4.16.2	----------NOTE---------- Only required to be performed in MODE 1. ---------- Verify reactor coolant DOSE EQUIVALENT I-131 specific activity ≤ 1.0 µCi/gm.	14 days AND Between 2 and 6 hours after a THERMAL POWER change of ≥ 15% RTP within a 1 hour period

(continued)

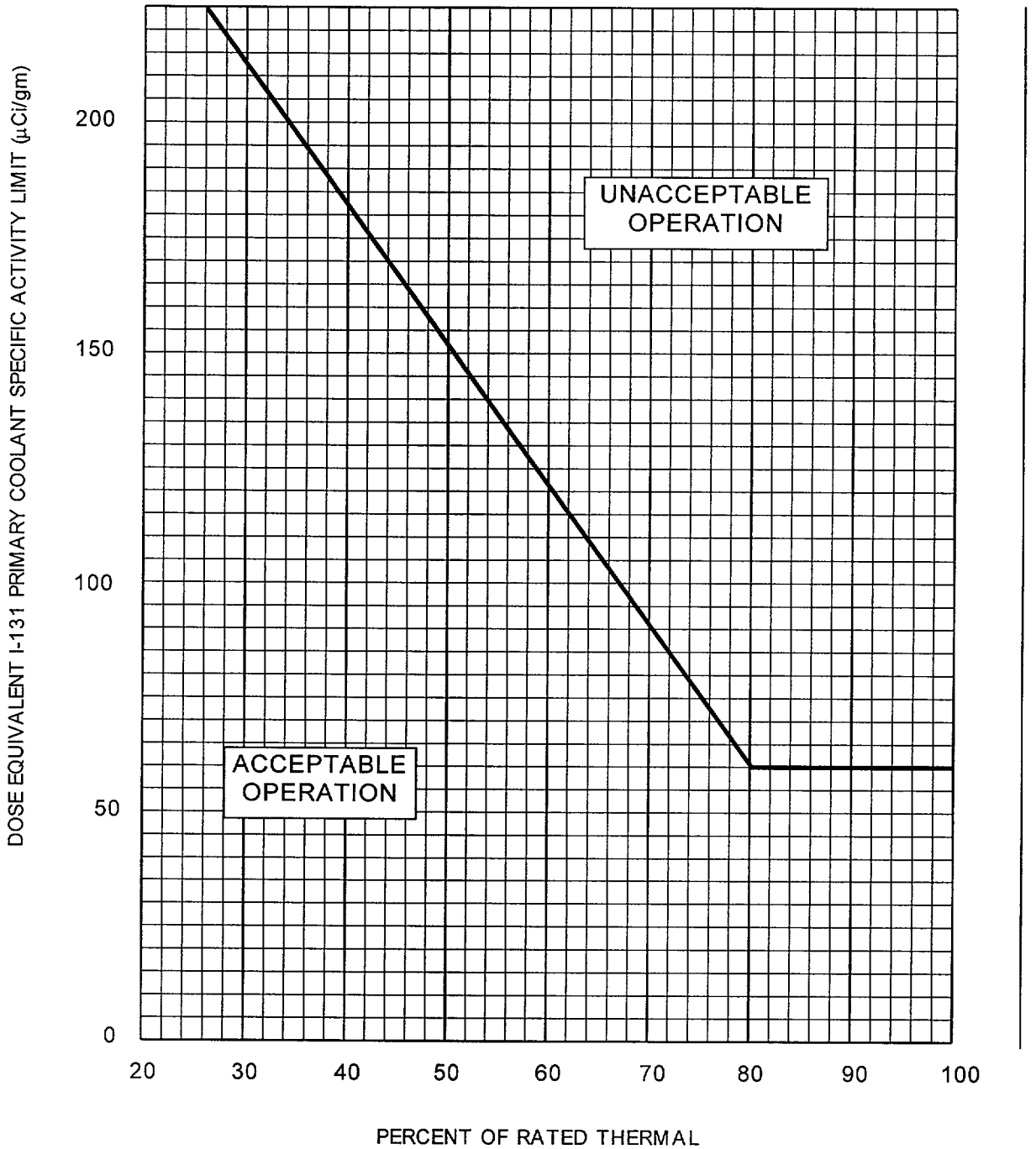

Figure 3.4.16-1 (page 1 of 1)
Reactor Coolant DOSE EQUIVALENT I-131 Specific Activity Limit Versus
Percent of RATED THERMAL POWER

SURVEILLANCE REQUIREMENTS (continued)

SURVEILLANCE		FREQUENCY
SR 3.7.9.2	Perform required CREFS filter testing in accordance with the Ventilation Filter Testing Program (VFTP).	In accordance with VFTP
SR 3.7.9.3	Verify each CREFS emergency make-up fan actuates on an actual or simulated actuation signal.	18 months
SR 3.7.9.4	Verify each CREFS automatic damper in the emergency mode flow path actuates to the correct position on an actual or simulated actuation signal.	18 months
SR 3.7.9.5	Verify each CREFS emergency make-up fan can maintain a positive pressure of ≥ 0.125 inches water gauge in the control room envelope, relative to the adjacent turbine building during the emergency mode of operation at a makeup flow rate of 4950 cfm ± 10%.	18 months

3.7 PLANT SYSTEMS

3.7.13 Secondary Specific Activity

LCO 3.7.13 The specific activity of the secondary coolant shall be ≤ 0.1 μCi/gm DOSE EQUIVALENT I-131.

APPLICABILITY: MODES 1, 2, 3, and 4.

ACTIONS

CONDITION	REQUIRED ACTION	COMPLETION TIME
A. Specific activity not within limit.	A.1 Be in MODE 3.	6 hours
	AND	
	A.2 Be in MODE 5.	36 hours

SURVEILLANCE REQUIREMENTS

SURVEILLANCE		FREQUENCY
SR 3.7.13.1	Verify the specific activity of the secondary coolant is ≤ 0.1 μCi/gm DOSE EQUIVALENT I-131.	31 days

3.9 REFUELING OPERATIONS

3.9.3 DELETED

TABLE OF CONTENTS

B 3.3 INSTRUMENTATION

B 3.3.5 Control Room Emergency Filtration System (CREFS) Actuation Instrumentation

BASES

BACKGROUND

The CREFS provides an enclosed control room environment from which the unit can be operated following an uncontrolled release of radioactivity. The control room ventilation system normally operates in the normal operating mode (Mode 1). Upon receipt of an actuation signal, the CREFS initiates the emergency make-up (Mode 4) mode of operation. The control room ventilation system and its operating modes are described in the Bases for LCO 3.7.9, "Control Room Emergency Filtration System."

The actuation instrumentation consists of containment isolation, noble gas radiation monitor in the air intake and control room area radiation monitor. A containment isolation signal or high radiation signal from either of these detectors will initiate the emergency make-up mode of operation (Mode 4) of the CREFS.

APPLICABLE SAFETY ANALYSES

The CREFS provides airborne radiological protection for control room personnel, as demonstrated by the limiting control room dose analyses for the design basis large break loss of coolant accident. Control room dose analysis assumptions are presented in the FSAR, Section 14.3.5 (Ref. 1).

In MODES 1, 2, 3, and 4, a containment isolation signal or the CREFS radiation monitor actuation signal will provide automatic initiation of CREFS in the emergency make-up mode of operation (Mode 4) during design basis events which result in significant radiological releases to the environs (e.g. large break loss of coolant accident, steam generator tube rupture, reactor coolant pump locked rotor, etc;).

The CREFS radiation monitor actuation signal also provides automatic initiation of CREFS, in the emergency make-up mode of operation (Mode 4), to assure control room habitability in the event of a fuel handling accident during movement of irradiated fuel, and CORE ALTERATIONS.

Further Applicable Safety Analysis information for CREFS is contained in the Bases for LCO 3.7.9, "Control Room Emergency Filtration System."

The CREFS actuation instrumentation satisfies Criterion 3 of the NRC Policy Statement.

BASES

LCO

The LCO requirements ensure that instrumentation necessary to initiate the CREFS is OPERABLE.

1. Control Room Radiation

   The LCO requires either the control room area monitor (RE-101) or the control room air intake noble gas monitor (RE-235) to be OPERABLE, to ensure that the instrumentation necessary to initiate the CREFS emergency make-up mode (Mode 4) is OPERABLE.

   Table 3.3.5-1 identifies the Technical Specification Trip Setpoint for the Control Room Area Monitor and Control Room Air Intake as $\leq$ 2 mrem/hr and $\leq$ 6E-6 μCi/cc, respectively.

2. Containment Isolation

   Refer to LCO 3.3.2, Function 3, for all initiating Functions and requirements.

APPLICABILITY

The CREFS Functions must be OPERABLE in MODES 1, 2, 3, 4, and during CORE ALTERATIONS and movement of irradiated fuel assemblies.

The Applicability for the CREFS actuation on the ESFAS Safety Injection Functions are specified in LCO 3.3.2. Refer to the Bases for LCO 3.3.2 for discussion of the Safety Injection Function Applicability.

ACTIONS

A Note has been added to the ACTIONS indicating that separate Condition entry is allowed for each Function. The Conditions of this Specification may be entered independently for each Function listed in Table 3.3.5-1 in the accompanying LCO. The Completion Time(s) of the inoperable Function will be tracked separately for each Function starting from the time the Condition was entered for that Function.

A.1

Condition A applies to the containment isolation signal and either the control room area radiation monitor (RE-101) or the control room intake noble gas monitor (RE-235).

BASES

ACTIONS (continued)

If a Function is inoperable, 7 days is permitted to restore the Function to OPERABLE status from the time the Condition was entered for that Function. The 7 day Completion Time is the same as for inoperable CREFS. The basis for this Completion Time is the same as provided in LCO 3.7.9. If the Function cannot be restored to OPERABLE status, CREFS must be placed in the emergency make-up mode of operation (MODE 4). Placing CREFS in the emergency make-up mode of operation accomplishes the actuation instrumentation's safety function.

B.1, B.2, B.3, and B.4

Condition B applies when the Required Action and associated Completion Time for Condition A have not been met. If Movement of irradiated fuel assemblies or CORE ALTERATIONS are in progress, these activities must be suspended immediately to reduce the risk of accidents that would require CREFS actuation. In addition, if any unit is in MODE 1, 2, 3, or 4, the unit must be brought to a MODE in which the LCO requirements are not applicable. To achieve this status, the unit must be brought to MODE 3 within 6 hours and MODE 5 within 36 hours. The allowed Completion Times are reasonable, based on operating experience, to reach the required unit conditions from full power conditions in an orderly manner and without challenging unit systems.

The Required Actions for Condition B are modified by a Note that states that Required Actions B.1 and B.2 are not applicable for inoperability of the Containment Isolation actuation function. This note is necessary because the Applicability for the Containment Isolation actuation function is Modes 1, 2, 3, and 4. The Containment Isolation actuation function is not used for mitigation of accidents involving the movement of irradiated fuel assemblies.

SURVEILLANCE REQUIREMENTS

A Note has been added to the SR Table to clarify that Table 3.3.5-1 determines which SRs apply to which CREFS Actuation Functions.

SR 3.3.5.1

Performance of the CHANNEL CHECK once every 12 hours ensures that a gross failure of instrumentation has not occurred. A CHANNEL CHECK is normally a comparison of the parameter indicated on one channel to a similar parameter on other channels. However, in the case of the control room area and control room intake noble gas monitors, no independent instrument channel exist, therefore, the CHANNEL CHECK for these monitors will consist of a qualitative assessment of expected channel behavior, based on current plant and control room conditions. A CHANNEL CHECK will detect gross

BASES

SURVEILLANCE REQUIREMENTS (continued)

channel failure; thus, it is key to verifying the instrumentation continues to operate properly between each CHANNEL CALIBRATION. The Frequency is based on operating experience that demonstrates channel failure is rare.

SR 3.3.5.2

A COT is performed once every 92 days on each required channel to ensure the entire channel will perform the intended function. This test verifies the capability of the instrumentation to provide the CREFS actuation. The setpoints shall be left consistent with the unit specific calibration procedure tolerance. The Frequency is based on the known reliability of the monitoring equipment and has been shown to be acceptable through operating experience.

SR 3.3.5.3

A CHANNEL CALIBRATION is performed every 18 months, or approximately at every refueling. CHANNEL CALIBRATION is a complete check of the instrument loop, including the sensor.
The test verifies that the channel responds to a measured parameter within the necessary range and accuracy.

The Frequency is based on operating experience and is consistent with the typical industry refueling cycle.

REFERENCE

1. FSAR. Section 14.3.5.

BASES

BASES

APPLICABLE SAFETY ANALYSES

The safety design basis for the containment is that the containment must withstand the pressures and temperatures of the limiting design basis Loss of Coolant Accident without exceeding the design leakage rate.

For the design basis Loss of Coolant Accident analyses, it is assumed that the containment is OPERABLE such that, the release of fission product radioactivity, release to the environment is controlled by the rate of containment leakage. The containment was designed with an allowable leakage rate of 0.4% of containment air weight per day (Ref. 3). This leakage rate, used to evaluate offsite doses resulting from accidents, is defined in 10 CFR 50, Appendix J, Option B (Ref. 1), as L_a: the maximum allowable containment leakage rate at the calculated peak containment internal pressure (P_a) resulting from the limiting design basis LOCA. The allowable leakage rate represented by L_a forms the basis for the acceptance criteria imposed on all containment leakage rate testing. L_a is assumed to be 0.2% per day in the safety analysis at P_a = 60 psig (Ref. 2).

Satisfactory leakage rate test results are a requirement for the establishment of containment OPERABILITY.

The containment satisfies Criterion 3 of the NRC Policy Statement.

LCO

Containment OPERABILITY is maintained by limiting leakage to $\leq 1.0\ L_a$, except prior to the first startup after performing a required Containment Leakage Rate Testing Program leakage test. At this time, the applicable leakage limits contained in the Containment Leakage Rate Testing Program must be met.

Compliance with this LCO will ensure a containment configuration, including the equipment hatch, that is structurally sound and that will limit leakage to those leakage rates assumed in the safety analysis.

Individual leakage rates specified for the containment air lock (LCO 3.6.2) are not specifically part of the acceptance criteria of 10 CFR 50, Appendix J, Option B. Therefore, leakage rates exceeding these individual limits only result in the containment being inoperable when the leakage results in exceeding the overall acceptance criteria of $1.0\ L_a$.

BASES

APPLICABLE SAFETY ANALYSES

The DBA that results in a release of radioactive material within containment is a loss of coolant accident (Ref. 2). In the analysis of this accident, it is assumed that containment is OPERABLE such that release of fission products to the environment is controlled by the rate of containment leakage. The containment was originally designed with an allowable leakage rate of 0.4% of containment air weight per day (Ref. 2). This leakage rate is defined in 10 CFR 50, Appendix J, Option B (Ref. 1), as L_a, the maximum allowable containment leakage rate at the calculated peak design containment internal pressure, P_a of 60 psig, following a design basis LOCA. The radiological analysis for supporting a LOCA was performed assuming an L_a = 0.2% per day (Ref. 3). This allowable leakage rate forms the basis for the acceptance criteria imposed on the SRs associated with the air locks.

The containment air locks satisfy Criterion 3 of the NRC Policy Statement.

LCO

Each containment air lock forms part of the containment pressure boundary. As part of the containment pressure boundary, the air lock safety function is related to control of the containment leakage rate resulting from a DBA. Thus, each air lock's structural integrity and leak tightness are essential to the successful mitigation of such an event.

Each air lock is required to be OPERABLE. For the air lock to be considered OPERABLE, the air lock interlock mechanism must be OPERABLE, the air lock must be in compliance with the Type B air lock leakage test, and both air lock bulkheads must be OPERABLE. The interlock allows only one air lock door and its associated equalization valve of an air lock to be opened at one time. This provision ensures that a gross breach of containment does not exist when containment is required to be OPERABLE. The OPERABILITY of a single bulkhead (e.g., bulkhead door, door seals, equalization valve, interlock shaft seals, etc;) in each air lock is sufficient to provide a leak tight barrier following postulated events. Nevertheless, both doors and their associated equalization valves are kept closed when the air lock is not being used for normal entry into or exit from containment.

BASES

APPLICABILITY

In MODES 1, 2, 3, and 4, a design basis LOCA could cause a release of radioactive material to containment. In MODES 5 and 6, the probability and consequences of a design basis LOCA are reduced due to the pressure and temperature limitations of these MODES. Therefore, the containment air locks are not required in MODE 5 to prevent leakage of radioactive material from containment as a result of a design basis LOCA. The requirements for the containment air locks during MODE 6 are addressed in LCO 3.9.3, "Containment Penetrations."

ACTIONS

The ACTIONS are modified by a Note that allows entry and exit to perform repairs on the affected air lock component. If the outer door is inoperable, then it may be easily accessed for most repairs. It is preferred that the air lock be accessed from inside primary containment by entering through the other OPERABLE air lock. However, if this is not practicable, or if repairs on either door must be performed from the barrel side of the door then it is permissible to enter the air lock through the OPERABLE door, which means there is a short time during which the containment boundary is not intact (during access through the OPERABLE door). The ability to open the OPERABLE door, even if it means the containment boundary is temporarily not intact, is acceptable due to the low probability of an event that could pressurize the containment during the short time in which the OPERABLE door is expected to be open. After each entry and exit, the OPERABLE door must be immediately closed, but is not required to be locked while repairs are actively being performed on the inoperable bulkhead. If ALARA conditions permit, entry and exit should be via an OPERABLE air lock.

A second Note has been added to provide clarification that, for this LCO, separate Condition entry is allowed for each air lock. This is acceptable, since the Required Actions for each Condition provide appropriate compensatory actions for each inoperable air lock. Complying with the Required Actions may allow for continued operation, and a subsequent inoperable air lock is governed by subsequent Condition entry and application of associated Required Actions.

In the event the air lock leakage results in exceeding the overall containment leakage rate, Note 3 directs entry into the applicable Conditions and Required Actions of LCO 3.6.1, "Containment."

BASES

ACTIONS (continued) A.1, A.2, and A.3

With one air lock bulkhead in one or more containment air locks inoperable, the door and its associated equalization valve in the OPERABLE bulkhead must be verified closed (Required Action A.1) in each affected containment air lock. This ensures that a leak tight containment barrier is maintained by the use of an OPERABLE bulkhead. This action must be completed within 1 hour. This specified time period is consistent with the ACTIONS of LCO 3.6.1, which requires containment be restored to OPERABLE status within 1 hour.

In addition, the affected air lock penetration must be isolated by locking closed the bulkhead door and equalization valve on the OPERABLE bulkhead within the 24 hour Completion Time. The 24 hour Completion Time is reasonable for locking the bulkhead door and equalization valve on the OPERABLE bulkhead, considering the bulkhead door and equalization valve on the OPERABLE bulkhead of the affected air lock is being maintained closed.

Required Action A.3 verifies that an air lock with an inoperable bulkhead has been isolated by the use of a locked and closed bulkhead door and equalization valve on the OPERABLE bulkhead. This ensures that an acceptable containment leakage boundary is maintained. The Completion Time of once per 31 days is based on engineering judgment and is considered adequate in view of the low likelihood of a locked door or equalization valve being mispositioned and other administrative controls. Required Action A.3 is modified by a Note that applies to air lock doors and equalization valves located in high radiation areas and allows these doors and valves to be verified locked closed by use of administrative means. Allowing verification by administrative means is considered acceptable, since access to these areas is typically restricted. Therefore, the probability of misalignment of the door or equalization valve, once it has been verified to be in the proper position, is small.

The Required Actions have been modified by two Notes. Note 1 ensures that only the Required Actions and associated Completion Times of Condition C are required if both bulkheads in the same air lock are inoperable. With both bulkheads in the same air lock inoperable, an OPERABLE isolation boundary is not available. Required Actions C.1 and C.2 are the appropriate remedial actions. The exception of Note 1 does not affect tracking the Completion Time from the initial entry into Condition A; only the requirement to comply with the Required Actions. Note 2 allows use of the air lock for entry and exit for 7 days under administrative controls if both air locks have an inoperable bulkhead. This 7 day restriction begins when the second air lock is discovered inoperable. Containment entry may be required on a periodic basis to

BASES

ACTIONS (continued) perform Technical Specifications (TS) Surveillances and Required Actions, as well as other activities on equipment inside containment that are required by TS or activities on equipment that support TS-required equipment. This Note is not intended to preclude performing other activities (i.e., non-TS-required activities) if the containment is entered, using the inoperable air lock, to perform an allowed activity listed above. This allowance is acceptable due to the low probability of an event that could pressurize the containment during the short time that the OPERABLE door is expected to be open.

B.1, B.2, and B.3

With an air lock interlock mechanism inoperable in one or more air locks, the Required Actions and associated Completion Times are consistent with those specified in Condition A. The Required Actions have been modified by two Notes. Note 1 ensures that only the Required Actions and associated Completion Times of Condition C are required if both bulkheads in the same air lock are inoperable. With both bulkheads in the same air lock inoperable, an OPERABLE isolation boundary is not available. Required Actions C.1 and C.2 are the appropriate remedial actions. Note 2 allows entry into and exit from containment under the control of a dedicated individual stationed at the air lock to ensure that only one bulkhead door and its associated equalization valve is opened at a time (i.e., the individual performs the function of the interlock).

Required Action B.3 is modified by a Note that applies to air lock doors and equalization valves located in high radiation areas and allows these doors and valves to be verified locked closed by use of administrative means. Allowing verification by administrative means is considered acceptable, since access to these areas is typically restricted. Therefore, the probability of misalignment of the door or equalization valve, once it has been verified to be in the proper position, is small.

C.1, C.2, and C.3

With one or more air locks inoperable for reasons other than those described in Condition A or B, Required Action C.1 requires action to be initiated immediately to evaluate previous combined leakage rates using current air lock test results. An evaluation is acceptable, since it is overly conservative to immediately declare the containment inoperable if both bulkheads in an air lock are inoperable. In many instances (e.g., only one seal per door has failed), containment remains OPERABLE, yet only 1 hour (per LCO 3.6.1) would be provided to restore the air lock bulkhead to OPERABLE status prior to requiring a

BASES

ACTIONS (continued)

plant shutdown. In addition, even with both doors failing the seal test, the overall containment leakage rate can still be within limits. Required Action C.2 requires that one door and its associated equalization valve in the affected containment air lock must be verified to be closed within the 1 hour Completion Time. This specified time period is consistent with the ACTIONS of LCO 3.6.1, which requires that containment be restored to OPERABLE status within 1 hour.

Additionally, the affected air lock(s) must be restored to OPERABLE status within the 36 hour Completion Time. The specified time period is considered reasonable for restoring an inoperable air lock to OPERABLE status, assuming that at least one door and its associated equalization valve are maintained closed in each affected air lock.

D.1 and D.2

If the inoperable containment air lock cannot be restored to OPERABLE status within the required Completion Time, the plant must be brought to a MODE in which the LCO does not apply. To achieve this status, the plant must be brought to at least MODE 3 within 6 hours and to MODE 5 within 36 hours. The allowed Completion Times are reasonable, based on operating experience, to reach the required plant conditions from full power conditions in an orderly manner and without challenging plant systems.

SURVEILLANCE REQUIREMENTS

SR 3.6.2.1

Maintaining containment air locks OPERABLE requires compliance with the leakage rate test requirements of the Containment Leakage Rate Testing Program. This SR reflects the leakage rate testing requirements with regard to air lock leakage (Type B leakage tests). The acceptance criteria specified in the Containment Leakage Rate Testing Program for the air locks, limits airlock leakage to a small percentage of the combined Type B and C leakage limit.

The Frequency is required by the Containment Leakage Rate Testing Program.

BASES

SURVEILLANCE REQUIREMENTS (continued)

The SR has been modified by two Notes. Note 1 states that an inoperable air lock door does not invalidate the previous successful performance of the overall air lock leakage test. This is considered reasonable since either air lock door is capable of providing a fission product barrier in the event of a DBA. Note 2 has been added to this SR requiring the results to be evaluated against the acceptance criteria which is applicable to SR 3.6.1.1. This ensures that air lock leakage is properly accounted for in determining the combined Type B and C containment leakage rate.

SR 3.6.2.2

The bulkhead doors and equalization valves are interlocked with each other to prevent simultaneous opening of the doors and or equalizing valves in the redundant bulkheads. Since both the inner and outer bulkheads of an air lock are designed to withstand the maximum expected post accident containment pressure, OPERABILITY of either bulkhead will support containment OPERABILITY. Thus, the airlock interlock feature supports containment OPERABILITY while the air lock is being used for personnel transit in and out of the containment. Periodic testing of this interlock demonstrates that the interlock will function as designed and that simultaneous opening of the inner and outer doors and or equalizing valves in redundant bulkheads will not inadvertently occur. Due to the purely mechanical nature of this interlock, and given that the interlock mechanism is not normally challenged when the containment air lock door is used for entry and exit (procedures require strict adherence to single door opening), this test is only required to be performed every 24 months. The 24 month Frequency is based on the need to perform this Surveillance under the conditions that apply during a plant outage, and the potential for loss of containment OPERABILITY if the Surveillance were performed with the reactor at power. The 24 month Frequency for the interlock is justified based on generic operating experience. The Frequency is based on engineering judgment and is considered adequate given that the interlock is not challenged during the use of the airlock.

REFERENCES

1. 10 CFR 50, Appendix J, Option B.
2. FSAR, Section 5.5.
3. FSAR, Section 14.3.5.

B 3.7 PLANT SYSTEMS

B 3.7.9 Control Room Emergency Filtration System (CREFS)

BASES

BACKGROUND

The CREFS provides a protected environment from which operators can control the unit following an uncontrolled release of radioactivity. The CREFS is a subsystem of the Control Room HVAC system.

The CREFS consists of one emergency make-up air filtration unit, two emergency make-up fans, two recirculation fans, and the required ducts and dampers necessary to establish the required flow paths and isolation boundaries. The CREFS is an emergency system, parts of which operate during normal unit operations. The Control Room HVAC system has four modes of operation.

- Mode 1 (normal operation) - One of the two recirculation fans (W-13B1 or W-13B2) are in operation. Outside air is supplied from an intake penthouse located on the roof of the auxiliary building at a rate of approximately 1000 cfm (5% of system design flow) via damper VNCR-4849C which is throttled to a predetermined position. The make-up air combines with return air from the control room and computer room then passing through filter (F-43) and cooling units (HX-100 A&B) before entering the recirculation fan. Filtered and cooled air is supplied to the mechanical equipment room and through separate heating coils (HX-92 and HX-91 A&B), and humidifiers (Z-78 and Z-77) to the computer and control rooms respectively. Room thermostats and humidistats control the operation of the heating coils, chilled water system, and humidifiers. The control room heating, cooling, and humidification systems are not required to demonstrate compliance with the control room habitability limits of 10 CFR 50 Appendix A, GDC-19 as required by NUREG-0737, Item III.D.3.4. The computer room is supplied with supplementary cooling during normal operation via supplementary air conditioning units (W-107A/HX-190A/HX-191A or W-107B/HX-190B/HX-191B). Nominally, the control room washroom exhaust fan (W-15) is also in operation. Operation of the Control Room Ventilation System in mode 1 (normal operation) is not assumed for control room habitability, and is therefore not a Technical Specification required mode of operation.

- Mode 2 (recirculation operation) - 100% of the control room and computer room air is recirculated. In this mode, the outside air damper (VNCR-4849C) is closed and the control room washroom exhaust fan is de-energized. Recirculation can be automatically

BASES

BACKGROUND (continued)

initiated by a Containment Isolation or Safety Injection signal, or can be manually initiated from the control room. Operation of the Control Room Ventilation System in mode 2 (recirculation) is not assumed for control room habitability, and is therefore not a Technical Specification required mode of operation.

- Mode 3 (recirculation/charcoal adsorber operation) - One of two control room emergency make-up fans (W-14A or W-14B) is in operation and air is supplied to the emergency make-up charcoal filter unit (F-16) via the computer and control room return air duct (damper VNCR-4851B). The normal outside air supply is secured (damper VNCR-4849C closed) and the control room washroom exhaust fan is de-energized. In this mode approximately 25% of the return air is being recirculated by the emergency make-up charcoal filter unit back to the suction of the control room recirculation fans. Recirculation/charcoal adsorber mode is manually initiated from the control room. Operation of the Control Room Ventilation System in mode 3 (recirculation/charcoal adsorber mode) is not assumed for control room habitability, and is therefore not a Technical Specification required mode of operation.

- Mode 4 (emergency make-up) - Operation in this mode is similar to mode 3 except return air inlet damper VNCR-4851B to the emergency fans remains closed and outside air supply to the emergency make-up charcoal filter unit opens (damper VNCR-4851A). This allows approximately 4950 cfm (25% of system design flow) of make-up air to pass through the emergency make-up charcoal filter unit to the suction of the control room recirculation fan. This make-up flow rate is sufficient to assure a positive pressure of ≥ 1/8 in. water gage is maintained in the control and computer rooms to prevent excessive unfiltered in-leakage into the control room ventilation boundary. Mode 4 (emergency make-up) is automatically initiated by a containment isolation signal, a high radiation signal from the control room area monitor RE-101, or a high radiation signal from noble gas monitor RE-235 located in the supply duct to the control room. This mode of operation can also be manually initiated from the control room. Operation of the Control Room Ventilation System in mode 4 (emergency make-up) is the assumed mode of operation for the control room habitability analysis, and is therefore the only mode of operation addressed by this LCO.

BASES

BACKGROUND (continued)

The air entering the control room is continuously monitored by noble gas radiation monitors and the control room itself is continuously monitored by an area radiation monitor. One detector output above its setpoint will actuate the emergency make-up mode of operation (mode 4) for the CREFS.

The limiting design basis accident for the control room dose analysis is the large break LOCA. Although it has been demonstrated that a loss of offsite power does not need to be assumed coincident with a LOCA with respect to CREFS system analysis and control room habitability, the control room emergency make-up and recirculation fans have been included in the emergency diesel generator loading profile during the recirculation phase of a loss of coolant accident.

The CREFS will pressurize the control and computer rooms to at least 0.125 inches water gauge in the emergency make-up mode of operation. The CREFS role in maintaining the control room habitable is discussed in the FSAR, Section 9.8 (Ref. 1).

APPLICABLE SAFETY ANALYSES

The CREFS provides airborne radiological protection for control room personnel, as demonstrated by the limiting control room dose analyses for the design basis large break loss of coolant accident. Control room dose analysis assumptions are presented in the FSAR, Section 14.3.5 (Ref. 2).

The CREFS satisfies Criterion 3 of the NRC Policy Statement.

LCO

The CREFS (mode 4) is required to be OPERABLE to ensure that the control room habitability limits are met following a limiting design basis LOCA. Total system failure could result in exceeding the control room operator TEDE dose limit of 5 rem in the event of a large radioactive release. The CREFS is considered OPERABLE when the individual components necessary to filter and limit control room in-leakage are OPERABLE. CREFS is considered OPERABLE when:

a. Both emergency make-up fans (W-14A and W-14B) are OPERABLE;

b. Both recirculation fans (W-13B1 and W-13B2) are OPERABLE;

c. Emergency make-up filter unit (F-16), HEPA filters and charcoal adsorbers are not excessively restricting flow, and are capable of performing their filtration functions;

BASES

LCO (continued)

d. Control room ventilation envelope is capable of achieving and maintaining a positive pressure of at least 0.125 inches water gauge in the emergency make-up mode of operation;

e. Ductwork and dampers are OPERABLE, and air circulation can be maintained.

In addition, the control room boundary must be maintained, including the integrity of the walls, floors, ceilings, ductwork, and access doors.

APPLICABILITY

In MODES 1, 2, 3, 4, and during movement of irradiated fuel assemblies and during CORE ALTERATIONS, CREFS must be OPERABLE to control operator exposure during and following a DBA.

During movement of irradiated fuel assemblies and CORE ALTERATIONS, the CREFS must be OPERABLE to cope with the release from a fuel handling accident.

ACTIONS

A.1

When CREFS is inoperable, action must be taken to restore the system to OPERABLE status within 7 days. In this Condition, the remaining OPERABLE CREFS components may be adequate to perform the control room protection function; however, overall reliability may be reduced because a single active failure could result in loss of CREFS function. The 7 day Completion Time is based on the low probability of a DBA challenging control room habitability occurring during this time period.

B.1, B.2, B.3, and B.4

If CREFS cannot be restored to OPERABLE status within the required Completion Time with CORE ALTERATIONS or movement of irradiated fuel in progress, these activities must be suspended immediately. Immediately suspending these activities places the unit in a condition that minimizes risk from these activities. This does not preclude the movement of fuel to a safe position.

BASES

ACTIONS (continued)

In MODE 1, 2, 3, or 4, if CREFS cannot be restored to OPERABLE status within the required Completion Time, the unit must be placed in a MODE that minimizes accident risk. To achieve this status, the unit must be placed in at least MODE 3 within 6 hours, and in MODE 5 within 36 hours. The allowed Completion Times are reasonable, based on operating experience, to reach the required unit conditions from full power conditions in an orderly manner and without challenging unit systems.

SURVEILLANCE REQUIREMENTS

SR 3.7.9.1

Standby systems should be checked periodically to ensure that they function properly. As the environment and normal operating conditions on this system are not too severe, testing each fan subsystem once every month provides an adequate check of this system. Systems without heaters need only be operated for ≥ 15 minutes to demonstrate the function of the system. The 31 day Frequency is based on the reliability of the equipment.

SR 3.7.9.2

This SR verifies that the required CREFS testing is performed in accordance with the Ventilation Filter Testing Program (VFTP). The Frequency of CREFS filter tests are in accordance with Regulatory Guide 1.52 (Ref. 3). The VFTP includes testing the performance of the HEPA filter, charcoal adsorber efficiency, minimum flow rate, and the physical properties of the activated charcoal. Specific test Frequencies and additional information are discussed in detail in the VFTP.

SR 3.7.9.3

This SR verifies that each CREFS emergency make-up fan starts and operates on an actual or simulated actuation signal. The Frequency of 18 months is specified in Regulatory Guide 1.52 (Ref. 3).

SR 3.7.9.4

This SR verifies that each CREFS automatic damper in the emergency make-up mode flow path will actuate to its required position on an actuation signal. The Frequency of 18 months is specified in Regulatory Guide 1.52 (Ref. 3).

BASES

SURVEILLANCE REQUIREMENTS (continued)

SR 3.7.9.5

This SR verifies the integrity of the control room enclosure. The control room positive pressure, with respect to potentially contaminated adjacent areas, is periodically tested to verify proper functioning of the CREFS. During the emergency mode of operation, the CREFS is designed to pressurize the control room ≥ 0.125 inches water gauge positive pressure with respect to adjacent areas in order to minimize unfiltered inleakage. The CREFS is designed to maintain this positive pressure with one emergency make-up fan in operation at a makeup flow rate of ± 10% of the nominal make-up pressurization flow rate of approximately 4950 cfm. The Frequency of 18 months is consistent with the guidance provided in NUREG-0800 (Ref. 4).

REFERENCES

1. FSAR. Section 9.8.
2. FSAR. Section 14.3.5.
3. Regulatory Guide 1.52, Rev. 2.
4. NUREG-0800, Section 6.4, Rev. 2, July 1981.

B 3.9 REFUELING OPERATIONS

B 3.9.3 DELETED

B 3.9 REFUELING OPERATIONS

B 3.9.6 Refueling Cavity Water Level

BASES

BACKGROUND

The movement of irradiated fuel assemblies or performance of CORE ALTERATIONS, except during latching and unlatching of control rod drive shafts, within containment requires a minimum water level of 23 ft above the top of the reactor vessel flange. During refueling, this maintains sufficient water level in the containment, refueling canal, fuel transfer canal, refueling cavity, and spent fuel pool. Sufficient water is necessary to retain iodine fission product activity in the water in the event of a fuel handling accident (Refs. 1 and 2). Sufficient iodine activity would be retained to limit offsite doses from the accident to < 25% of 10 CFR 50.67 limits, as provided by the guidance of Reference 1.

APPLICABLE SAFETY ANALYSES

During CORE ALTERATIONS and movement of irradiated fuel assemblies, the water level in the refueling canal and the refueling cavity is an initial condition design parameter in the analysis of a fuel handling accident in containment (Ref. 1). A minimum water level of 23 ft allows an overall decontamination factor of 200 to be used in the accident analysis for iodine. This relates to the assumption that 99.85% of the iodine released from the damaged fuel assembly gaps is elemental and the remainder is organic. Therefore, an overall decontamination factor of 200 is achieved if an elemental decontamination factor of 285 is assumed (Ref. 1).

The fuel handling accident analysis inside containment is described in Reference 2. With a minimum water level of 23 ft and a minimum decay time of 65 hours prior to fuel handling, the analysis and test programs demonstrate that the iodine release due to a postulated fuel handling accident is adequately captured by the water and offsite doses are maintained within allowable limits (Ref. 3).

Refueling cavity water level satisfies Criterion 2 of the NRC Policy Statement.

LCO

A minimum refueling cavity water level of 23 ft above the reactor vessel flange is required to ensure that the radiological consequences of a postulated fuel handling accident inside containment are within acceptable limits, as provided by the guidance of Reference 1.

BASES

APPLICABILITY

LCO 3.9.6 is applicable during CORE ALTERATIONS, except during latching and unlatching of control rod drive shafts, and when moving irradiated fuel assemblies within containment. The LCO minimizes the possibility of a fuel handling accident in containment that is beyond the assumptions of the safety analysis. If irradiated fuel assemblies are not present in containment, there can be no significant radioactivity release as a result of a postulated fuel handling accident. Requirements for fuel handling accidents in the spent fuel pool are covered by LCO 3.7.15, "Fuel Storage Pool Water Level."

ACTIONS

A.1 and A.2

With a water level of < 23 ft above the top of the reactor vessel flange, all operations involving CORE ALTERATIONS or movement of irradiated fuel assemblies within the containment shall be suspended immediately to ensure that a fuel handling accident cannot occur.

The suspension of CORE ALTERATIONS and fuel movement shall not preclude completion of movement of a component to a safe position.

SURVEILLANCE REQUIREMENTS

SR 3.9.6.1

Verification of a minimum water level of 23 ft above the top of the reactor vessel flange ensures that the design basis for the analysis of the postulated fuel handling accident during refueling operations is met. Water at the required level above the top of the reactor vessel flange limits the consequences of damaged fuel rods that are postulated to result from a fuel handling accident inside containment (Ref. 2).

The Frequency of 24 hours is based on engineering judgment and is considered adequate in view of the large volume of water and the normal procedural controls of valve positions, which make significant unplanned level changes unlikely.

REFERENCES

1. Regulatory Guide 1.183.
2. FSAR. Section 14.2.1.
3. 10 CFR 50.67.