A File Name: 20002972

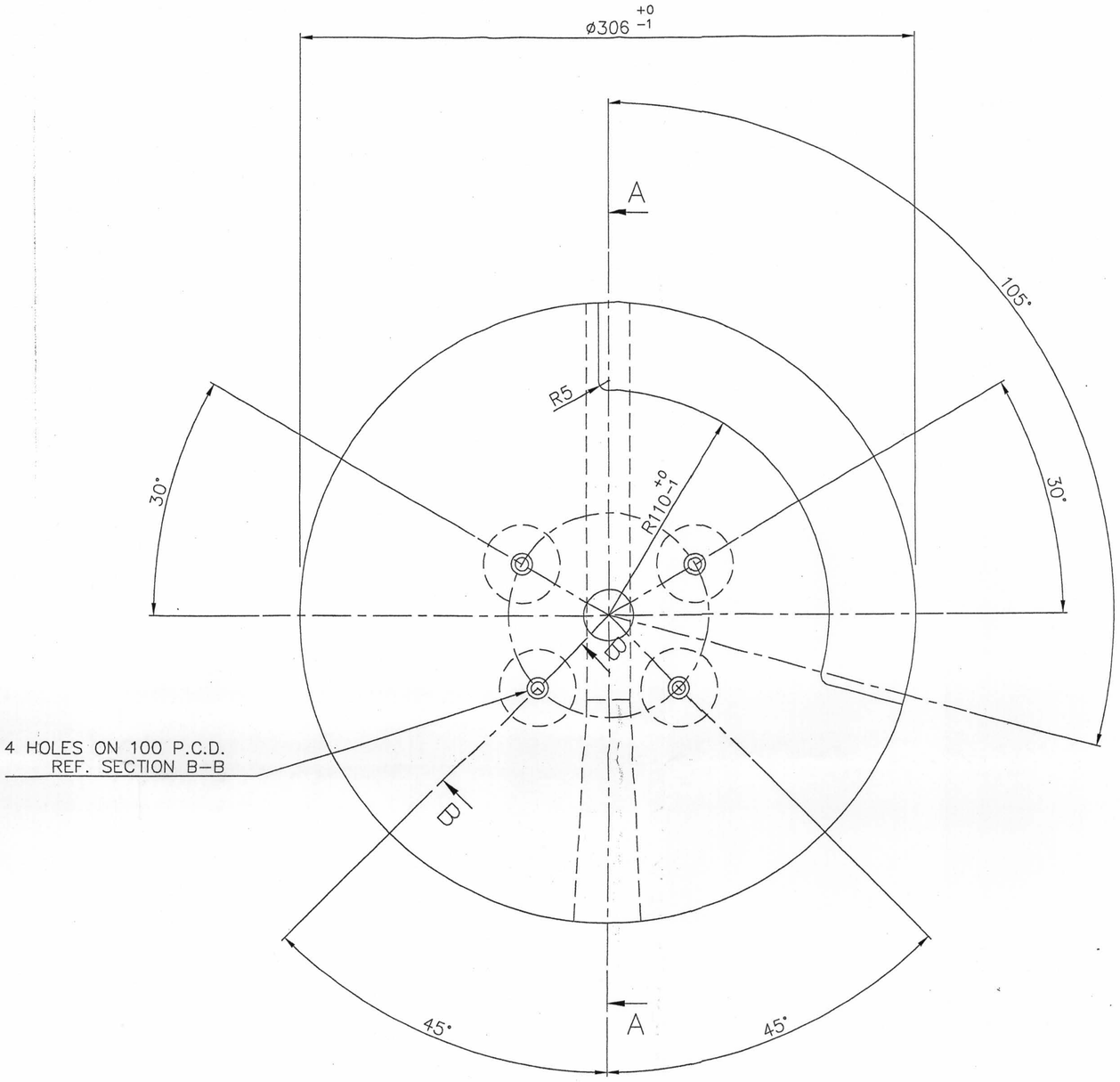

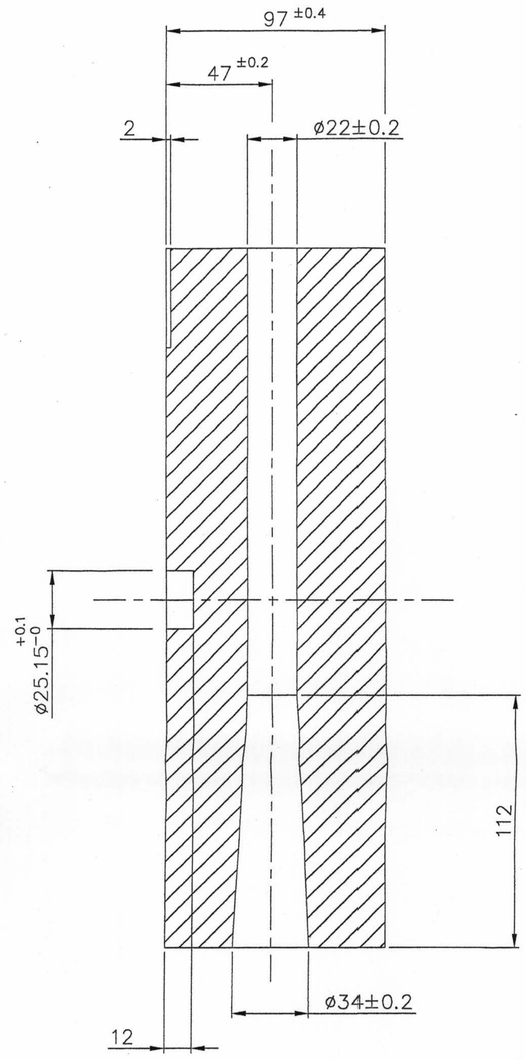

SECTION A–A

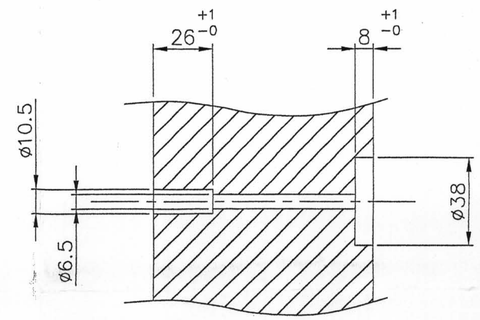

SECTION B–B

MATERIAL : POLYETHYLENE
FINISH : MEDIUM MACHINE
NOTE : REMOVE ALL BURRS & SHARP EDGES.

D-2

CHANGE	REV No.	DATE	CHANGE NOTICE No.
GENERAL UPDATE P.B.	1	11/2/98	

SHUTTER, ROTARY

MCI
MINERAL CONTROL INSTRUMENTATION PTY LIMITED
PO BOX 64 UNLEY SOUTH AUSTRALIA 5061

USED ON	CM100	DRAWING No.	REV No.
DRAWN	JOHN MARTIN DRAFTING	DATE 12/3/90	6625–00–0005 / 1
CHECKED		DATE	SCALE: 1:2 / SHEET 1 OF 1 / DRG. SIZE A2

GENERAL TOLERANCE ±0.5 LINEAR, ±0.5° ANGULAR, ±0.5 HOLE CRS.

DIMENSIONS IN MILLIMETRES UNLESS OTHERWISE STATED